Form No. 3356-793 Rev A

50cm Recycler® Lawn Mower

Model No. 20654—Serial No. 270000001 and Up

Operator's Manual

Introduction

Read this information carefully to learn how to operate and maintain your product properly and to avoid injury and product damage. You are responsible for operating the product properly and safely.

You may contact Toro directly at www.Toro.com for product and accessory information, help finding a dealer, or to register your product.

Whenever you need service, genuine Toro parts, or additional information, contact an Authorized Service Dealer or Toro Customer Service and have the model and serial numbers of your product ready. Figure 1 identifies the location of the model and serial numbers on the product.

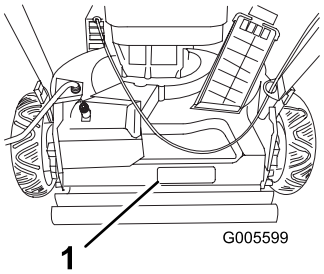

Figure 1

1. Model and serial number plate

Write the product model and serial numbers in the space below:

Model No. _____

Serial No. _____

This manual identifies potential hazards and has safety messages identified by the safety alert symbol (Figure 2), which signals a hazard that may cause serious injury or death if you do not follow the recommended precautions.



Figure 2

1. Safety alert symbol

This manual uses 2 words to highlight information. **Important** calls attention to special mechanical information and **Note** emphasizes general information worthy of special attention.

For models with stated engine horsepower, the gross horsepower of the engine was laboratory rated by the engine manufacturer in accordance with SAE J1940. As configured to meet safety, emission, and operating requirements, the actual engine horsepower on this class of lawn mower will be significantly lower.

Safety

Improperly using or maintaining this mower can result in injury. To reduce the potential for injury, comply with these safety instructions.

Toro designed and tested this mower for reasonably safe service; however, failure to comply with the following instructions may result in personal injury.

To ensure maximum safety, best performance, and to gain knowledge of the product, it is essential that you and any other operator of the mower read and understand the contents of this manual before the engine is ever started. Pay particular attention to the safety alert symbol (Figure 2) which means Caution, Warning, or Danger—"personal safety instruction." Read and understand the instruction because it has to do with safety. Failure to comply with the instruction may result in personal injury.

General Lawn Mower Safety

The following instructions have been adapted from the ISO standard 5395.

This cutting machine is capable of amputating hands and feet and throwing objects. Failure to observe the following safety instructions could result in serious injury or death.

Training

- Read the instructions carefully. Be familiar with the controls and the proper use of the equipment.
- Never allow children or people unfamiliar with these instructions to use the mower. Local regulations can restrict the age of the operator.

© 2006—The Toro® Company
8111 Lyndale Avenue South
Bloomington, MN 55420

Register at www.Toro.com.

CE

Original Instructions (EN)
Printed in the USA.
All Rights Reserved

- Keep in mind that the operator or user is responsible for accidents or hazards occurring to other people or their property.
- Understand explanations for all pictograms used on the mower or in the instructions.

Gasoline

WARNING-Gasoline is highly flammable. Take the following precautions.

- Store fuel in containers specifically designed for this purpose.
- Refuel outdoors only and do not smoke while refueling.
- Add fuel before starting the engine. Never remove the cap of the fuel tank or ad gasoline while the engine is running or when the engine is hot.
- If gasoline is spilled, do not attempt to start the engine but move the mower away from the area of spillage and avoid creating any source of ignition until gasoline vapors have dissipated.
- Replace all fuel tank and container caps securely.

Preparation

- While mowing, always wear substantial footwear and long trousers. Do not operate the equipment when barefoot or wearing open sandals.
- Thoroughly inspect the area where the equipment is to be used and remove all stones, sticks, wires, bones and other foreign objects.
- Before using, always visually inspect to see that guards, and safety devices, such as deflectors and/or grass catchers, are in place and working correctly.
- Before using, always visually inspect to see that the blades, blade bolts and cutter assembly are not worn or damaged. Replace worn or damaged blades and bolts in sets to preserve balance.

Starting

- Disengage all blade and drive clutches and shift into neutral before starting the engine.
- Do not tilt mower when starting the engine or switching on the motor, unless the mower has to be tilted for starting. In this case, do not tilt it more than absolutely necessary and lift only the part, which is away from the operator.
- Start the engine or switch on the motor carefully according to instructions and with feet well away from the blade(s) and not in front of the discharge chute.

Operation

- Never mow while people, especially children, or pets are nearby.
- Mow only in daylight or in good artificial light.
- Stay alert for holes in the terrain and other hidden hazards.
- Do not put hands or feet near or under rotating parts. Keep clear of the discharge opening at all times.
- Never pick up or carry a lawn mower while the engine is running.
- Use extreme caution when reversing or pulling a pedestrian controlled lawn mower towards you.
- Walk, never run.
- Slopes:
  - Do not mow excessively steep slopes.
  - Exercise extreme caution when on slopes.
  - Mow across the face of slopes, never up and down and exercise extreme caution when changing direction on slopes.
  - Always be sure of your footing on slopes.
- Use low throttle settings when engaging the traction-clutch, especially in high gears. Reduce speed on slopes and in sharp turns to prevent overturning or loss of control.
- Stop the blade if the lawn mower has to be tilted for transportation when crossing surfaces other than grass and when transporting the lawn mower to and from the area to be mowed.
- Do not operate the engine in a confined space where dangerous carbon monoxide fumes can collect.
- Stop the engine
  - whenever you leave the lawn mower.
  - before refueling.
  - before removing the grass catcher.
  - before making height adjustment unless adjustment can be made from the operator's position.
- Stop the engine and disconnect the spark-plug wire.
  - before clearing blockages or unclogging chute.
  - before checking, cleaning or working on the lawn mower.
  - after striking a foreign object, inspect the lawn mower for damage and make repairs before restarting and operating the lawn mower.
  - if lawn mower starts to vibrate abnormally (check immediately).
- Watch out for traffic when crossing or near roadways.

Maintenance and Storage

- Keep all nuts, bolts and screws tight to be sure the equipment is in safe working condition.
- Do not use pressure cleaning equipment on machine.

- Never store the equipment with gasoline in the tank and inside a building where fumes can reach an open flame or spark.
- Allow the engine to cool before storing in any enclosure.
- To reduce the fire hazard, keep the engine, silencer, battery compartment and gasoline storage area free of grass, leaves, or excessive grease.
- Check grass catcher components and the discharge guard frequently and replace with manufacturer's recommended parts, when necessary.
- Replace worn or damaged parts for safety.
- Replace faulty silencers.
- If the fuel tank has to be drained, do this out-doors.
- Do not change the engine governor settings or overspeed the engine. Operating an engine at excessive speed can increase the hazard of personal injury.
- Be careful during adjustment of the lawn mower to prevent entrapment of the fingers between moving blades and fixed parts of the lawn mower.
- **To ensure the best performance and safety, purchase only genuine Toro replacement parts and accessories. Do not use will fit parts and accessories; they may cause a safety hazard.**

Sound Pressure

This unit has an equivalent continuous A-weighted sound pressure level at the operator ear of 85 dBA, based on measurements of identical machines per EN 11094 and EN 836.

Sound Power

This unit has an equivalent continuous A-weighted sound power level of 98 dBA, based on measurements of identical machines per EN 11094.

Vibration, Hand/arm

This unit does not exceed a hand/arm vibration level of 8.0 m/s², based on measurements of identical machines per EN 1033.

Safety and Instructional Decals

Important: Safety and instruction decals are located near areas of potential danger. Replace damaged decals.

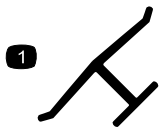

Manufacturer's Mark

1. Indicates the blade is identified as a part from the original machine manufacturer.

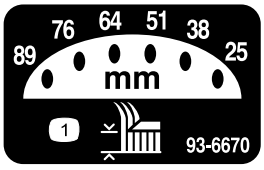

93-6670

1. Height of cut

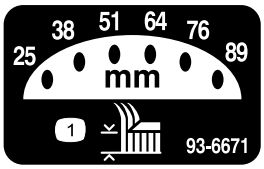

93-6671

1. Height of cut

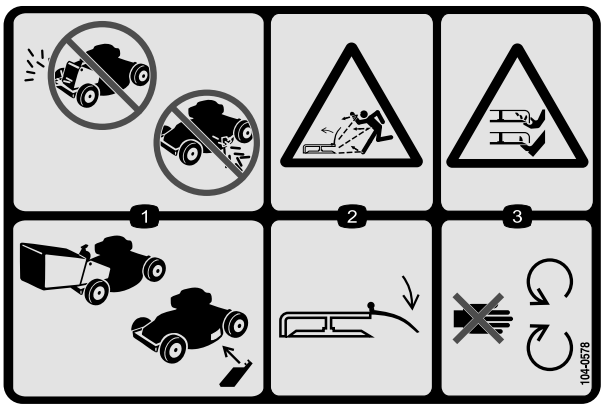

104-0578

1. Do not operate the mower without the rear discharge plug or bag in place; do not operate the mower without the side discharge cover or deflector in place.
2. Thrown object hazard, mower—keep the deflector in place.
3. Cutting dismemberment hazard of hand or foot—stay away from moving parts.

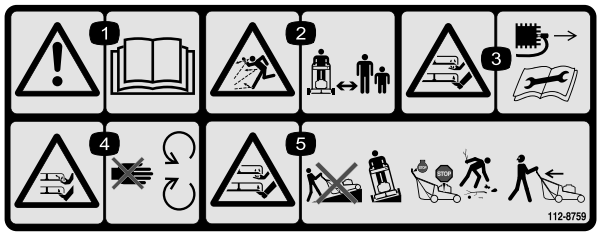

112-8759

1. Warning—read the *Operator's Manual.*
2. Thrown object hazard—keep bystanders a safe distance from the machine.
3. Cutting/dismemberment hazard of hand or foot, mower blade—remove the wire from the spark plug, and read the instructions before servicing or performing maintenance.
4. Cutting/dismemberment hazard of hand or foot, mower blade—stay away from moving parts.
5. Cutting/dismemberment hazard of hand or foot, mower blade—do not operate up and down slopes; operate side to side on slopes; stop the engine before leaving the operating position; and look behind you when backing.

Setup

Loose Parts

Use the chart below to verify that all parts have been shipped.

Step	Description	Qty.	Use
1.	Handle Handle knobs Screws	1 2 2	Install the handle.
2.	No parts required	–	Fill the crankcase with oil.

Note: Determine the left and right sides of the machine from the normal operating position.

1. Installing the Handle

Folding or unfolding the handle improperly can damage the cables, causing an unsafe operating condition.

- **Do not damage the cables when folding or unfolding the handle.**
- **If a cable is damaged, contact an Authorized Service Dealer.**

1. Slip the cable anchor onto the left lower handle end (Figure 3).

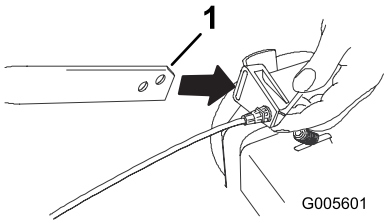

Figure 3

1. Ensure that the notch on the handle end faces upward.

2. Install the left lower handle end and cable anchor onto the pin on the left handle bracket (Figure 4).

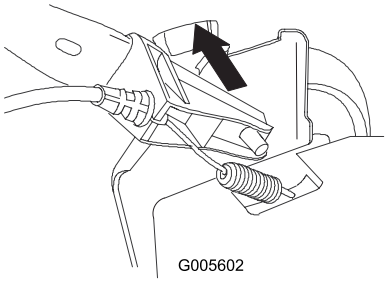

Figure 4

Note: Use the upper hole in the handle (Figure 4).

3. While holding the left lower handle end in position, slip the cable guide onto the right lower handle end, push the handle end and cable guide inward, and install it onto the pin on the right handle bracket (Figure 5).

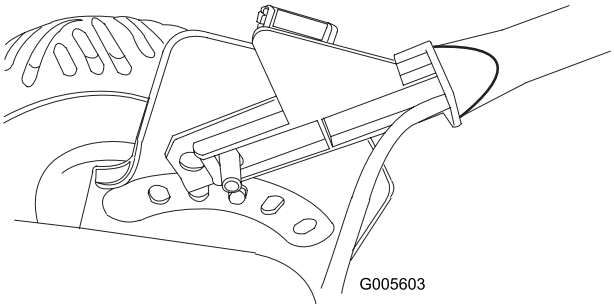

Figure 5

4. Insert the cable into the cable anchor on the left handle bracket (Figure 6).

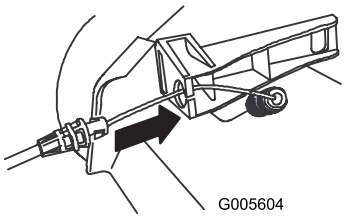

Figure 6

5. Attach the upper handle onto the lower handle.

   Note: Ensure that the handle knobs are on the inside of the handle (Figure 7).

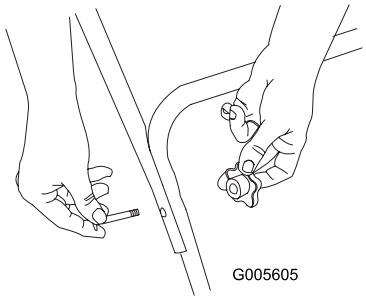

Figure 7

6. Tighten the handle knobs as tight as you can (Figure 8).

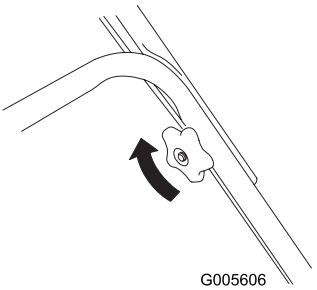

Figure 8

2. Filling the Crankcase with Oil

Important: Your mower does not come with oil in the engine.

1. Remove the dipstick (Figure 9).

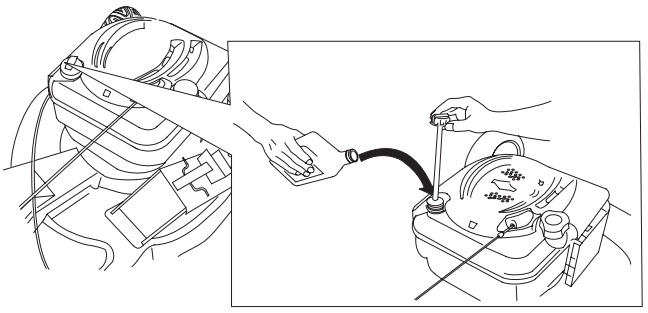

Figure 9

2. **Slowly** pour oil into the oil fill tube to raise the oil level to the Full mark on the dipstick. **Do not overfill.**
3. Install the dipstick securely.

   Important: Change the engine oil after the first 5 operating hours; change it yearly thereafter. Refer to Changing the Engine Oil.

   Max. fill: 0.59 l, type: SAE 30W detergent oil with an API service classification of SF, SG, SH, SJ, SL, or higher.

Product Overview

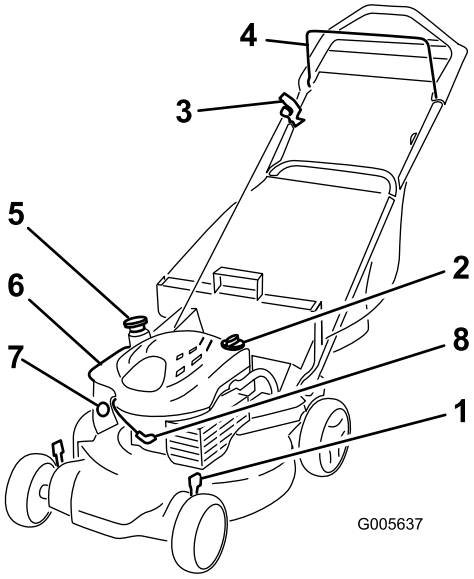

Figure 10

1. Cutting height lever (4)
2. Oil fill/dipstick
3. Recoil start handle
4. Blade control bar
5. Fuel tank cap
6. Air filter
7. Primer
8. Spark plug

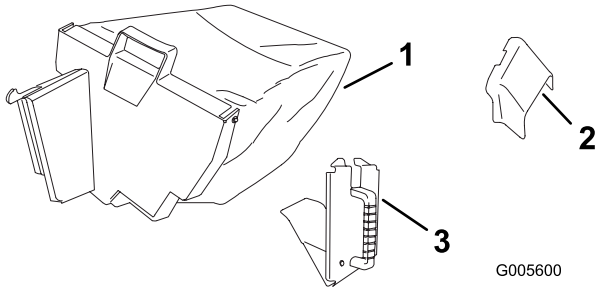

Figure 11

1. Grass bag
2. Side discharge chute
3. Rear discharge plug (installed)

Operation

Note: Determine the left and right sides of the machine from the normal operating position.

Filling the Fuel Tank

Gasoline is extremely flammable and explosive. A fire or explosion from gasoline can burn you and others.

- **To prevent a static charge from igniting the gasoline, place the container and/or mower directly on the ground before filling, not in a vehicle or on an object.**
- **Fill the tank outdoors when the engine is cold. Wipe up spills.**
- **Do not handle gasoline when smoking or around an open flame or sparks.**
- **Store gasoline in an approved fuel container, out of the reach of children.**

Fill the fuel tank with fresh unleaded regular gasoline from a major name-brand service station (Figure 12).

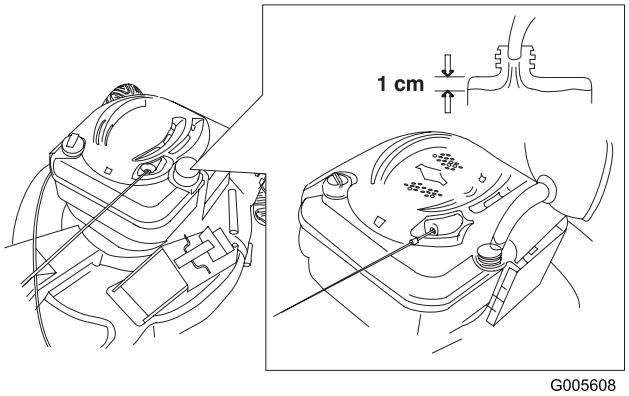

Figure 12

Important: **To reduce starting problems, add fuel stabilizer to the fuel all season, mixing it with gasoline less than 30 days old.**

Checking the Engine Oil Level

1. Remove the dipstick, wipe it clean, and fully install the dipstick (Figure 13).

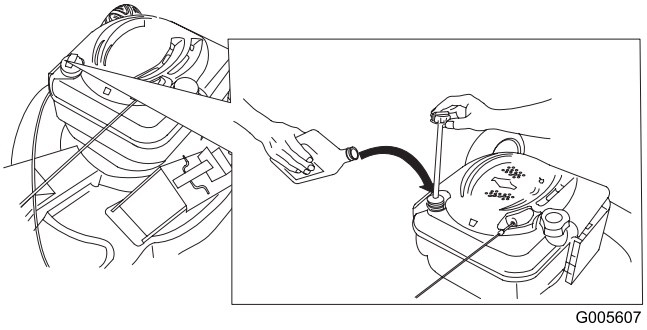

Figure 13

2. Remove the dipstick and check the oil level. If the oil level is below the Add mark on the dipstick, slowly pour oil into the oil fill tube to raise the oil level to the Full mark on the dipstick. **Do not overfill.** (Max. fill: 0.59 l, type: SAE 30 detergent oil with an API service classification of SF, SG, SH, SJ, SL, or higher.)
3. Install the dipstick.

Adjusting the Cutting Height

Adjusting the cutting height may bring you into contact with the moving blade, causing serious injury.

- **Stop the engine and wait for all moving parts to stop.**
- **Do not put your fingers under the housing when adjusting the cutting height.**

Adjust the cutting height as desired. Set all four wheels to the same height (Figure 14).

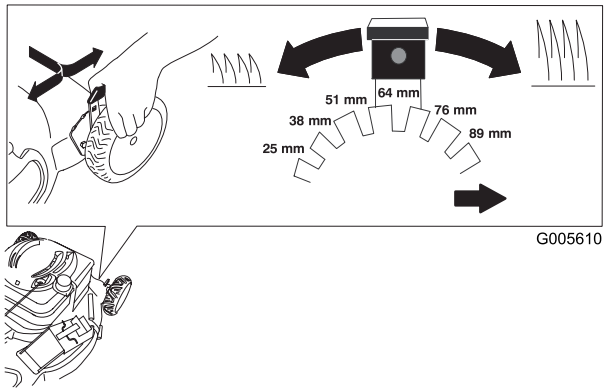

Figure 14

Adjusting the Handle Height

Squeeze the bottom of the handle halves together and change the handle holes in which the pins are mounted (Figure 15).

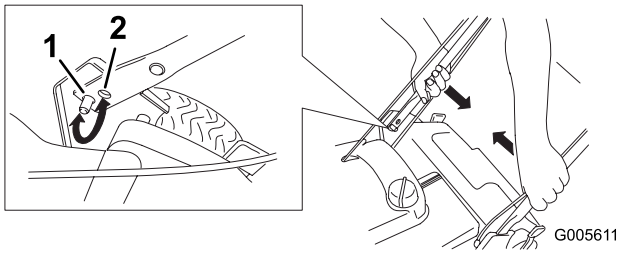

Figure 15

1. Raise the handle
2. Lower the handle

Note: The cable guide is not shown for the purpose of clarity.

Starting the Engine

1. Firmly push in the primer 3 times with your thumb, holding the primer in for a second before releasing it each time (Figure 16).

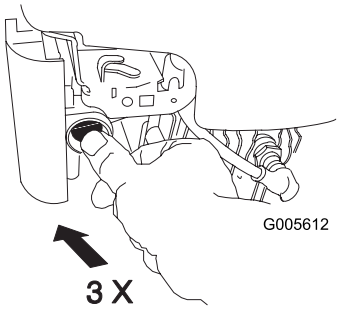

Figure 16

Note: If the temperature is below 13˚C, firmly push in the primer in 5 times.

2. Hold the blade control bar against the handle (Figure 17).

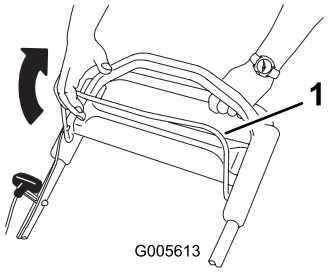

Figure 17

1. Blade control bar

3. Pull the recoil starter (Figure 18).

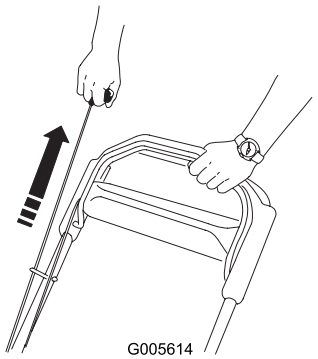

Figure 18

4. If the mower does not start in 1 or 2 pulls, press the primer button 1 or 2 times and try starting it again.

Using the Self-propel Drive

To operate the self-propel drive, simply walk with your hands on the upper handle and your elbows at your sides, and the mower will automatically keep pace with you (Figure 19 and Figure 20).

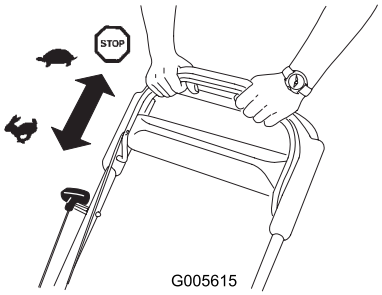

Figure 19



Figure 20

Stopping the Engine

To stop the engine, release the blade control bar (Figure 21). Remove the ignition key when you leave the mower.

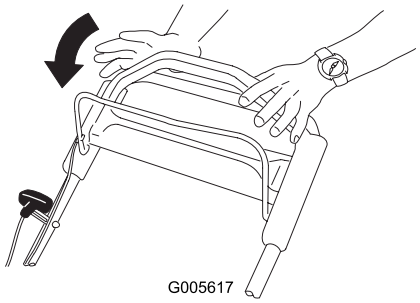

Figure 21

Important: When you release the blade control bar, both the engine and blade should stop within 3 seconds. If they do not stop properly, stop using your mower immediately and contact an Authorized Service Dealer.

Recycling the Clippings

Your mower comes from the factory ready to recycle the grass and leaf clippings back into the lawn.

If the grass bag is on the mower, remove it (refer to Removing the Grass Bag) before recycling the clippings. If the side discharge chute is on the mower, remove it and lock the side discharge door (refer to Removing the Side Discharge Chute) before recycling the clippings.

Important: Ensure that the rear discharge plug is in place before you recycle the clippings.

Installing the Discharge Plug

1. Open the discharge door by moving the discharge door handle rearward (Figure 22).

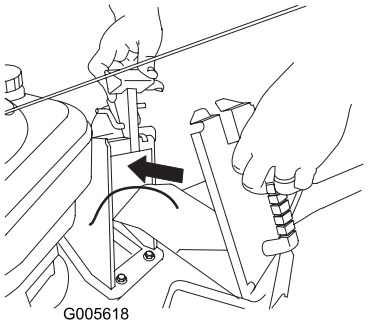

Figure 22

2. Hold the discharge door fully open and insert the plug (Figure 22).

   Note: Fit the lower section of the plug into the opening first.

3. Lift the door latch on the door handle and push the top of the plug all the way in while moving the door handle rearward (Figure 23).

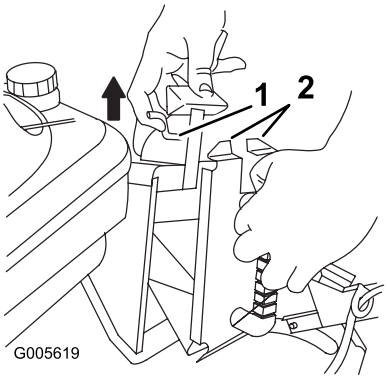

Figure 23

1. Door latch
2. Tabs

4. Release the door latch, allowing it to hook it over the tabs on the plug (Figure 23).

Removing the Discharge Plug

1. Pull up on the door latch and hold the discharge door fully open.
2. When the plug is unlocked, pull the plug out of the discharge tunnel.

Bagging the Clippings

Use the grass bag when you want to collect grass and leaf clippings from the lawn.

If the side discharge chute is on the mower, remove it and lock the side discharge door (refer to Removing the Side Discharge Chute) before bagging the clippings.

The blade is sharp; contacting the blade can result in serious personal injury.

Stop the engine and wait for all moving parts to stop before leaving the operating position.

Installing the Grass Bag

1. Check to ensure that the discharge door handle is fully forward.
2. Fit the bag door opening over the discharge tunnel opening (Figure 24).

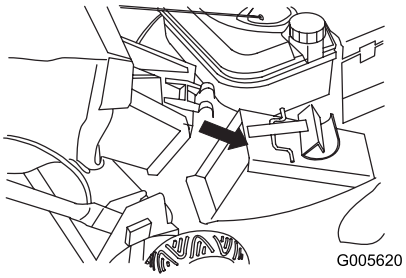

Figure 24

3. Set the rear of the bag frame on the handle knobs.
4. Pull the handle rearward until the latch locks into the notch in the bag door latch (Figure 25).

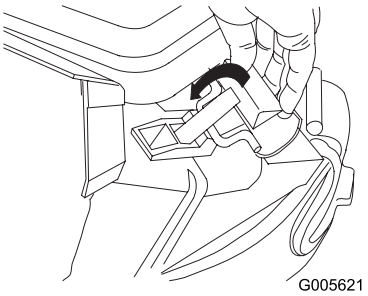

Figure 25

Removing the Grass Bag

1. Lift the door latch until it clears the bag notch and move the discharge door handle forward.
2. Grasp the bag frame handle and the rear of the grass bag and lift the bag off the mower.

Side Discharging the Clippings

Use the side discharge for cutting very tall grass.

If the bag is on the mower, remove it and insert the rear discharge plug (refer to Removing the Grass Bag) before side discharging the clippings.

Important: Ensure that the rear discharge plug is in place before you side discharge the clippings.

Installing the Side Discharge Chute

1. Remove the bolt and side cover clamp, then replace the bolt in the hole and save the clamp for future use (Figure 26).

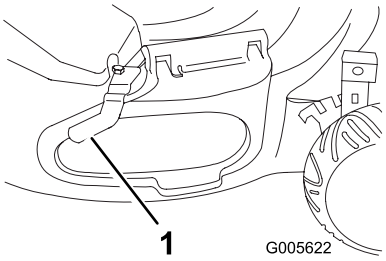

Figure 26

1. Side cover clamp

2. Lift up on the side opening cover (Figure 27).

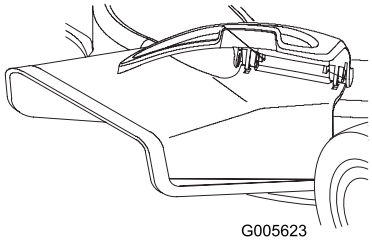

Figure 27

3. Slide the chute over the opening with the slots in the chute lined up with the tabs under the cover (Figure 27).
4. Close the cover.

Removing the Side Discharge Chute

1. Open the side opening cover and remove the side discharge chute.
2. Close the cover.
3. Remove the knob.
4. Install the side cover clamp and the knob, securing the side opening cover.

If the side opening cover is not securely clamped in place, debris could be thrown out of the side opening. Thrown debris can cause serious personal injury or death to the operator or bystanders.

Always ensure that either the side opening cover is closed and locked in place by the side cover clamp or that the side discharge chute is securely in place before starting the mower.

Operating Tips

General Mowing Tips

- Clear the area of sticks, stones, wire, branches, and other debris that the blade could hit.
- Avoid striking solid objects with the blade. Never deliberately mow over any object.
- If the mower strikes an object or starts to vibrate, immediately stop the engine, disconnect the wire from the spark plug, and examine the mower for damage.
- For best performance, install a new blade before the cutting season begins.
- Replace the blade when necessary with a Toro replacement blade.

Cutting Grass

- Cut only about a third of the grass blade at a time. Do not cut below the 51 mm setting unless the grass is sparse or it is late fall when grass growth begins to slow down. Refer to Adjusting the Cutting Height.
- When cutting grass over 15 cm tall, mow at the highest cutting height setting and walk slower; then mow again at a lower setting for the best lawn appearance. If the grass is too long, the mower may plug and cause the engine to stall.
- Mow only dry grass or leaves. Wet grass and leaves tend to clump on the yard and can cause the mower to plug or the engine to stall.

Wet grass or leaves can cause serious injury if you slip and contact the blade. Mow only in dry conditions.

- Alternate the mowing direction. This helps disperse the clippings over the lawn for even fertilization.
- If the finished lawn appearance is unsatisfactory, try one or more of the following:
  - Replace the blade or have it sharpened.
  - Walk at a slower pace while mowing.
  - Raise the cutting height on your mower.
  - Cut the grass more frequently.
  - Overlap cutting swaths instead of cutting a full swath with each pass.
  - Set the cutting height on the front wheels one notch lower than the rear wheels. For example, set the front wheels at 51 mm and the rear wheels at 64 mm.

Cutting Leaves

- After cutting the lawn, ensure that half of the lawn shows through the cut leaf cover. You may need to make more than one pass over the leaves.
- If there are more than 13 cm of leaves on the lawn, set the front cutting height one or two notches higher than the rear cutting height.
- Slow down your mowing speed if the mower does not cut the leaves finely enough.

Maintenance

Note: Determine the left and right sides of the mower by standing in the operating position.

Recommended Maintenance Schedule(s)

Maintenance Service Interval	Maintenance Procedure
After the first 5 operating hours	• Change the engine oil.
Before each use or daily	• Check the engine oil level. • Remove grass clippings and dirt from under the housing.
Every 25 hours	• Check the spark plug (refer to your engine operator's manual). • Replace the air filter; replace it more frequently in dusty operating conditions. • Replace the blade or have the blade sharpened; replace it or have it sharpened more frequently if the edge dulls quickly.
Every 50 hours	• Change the engine oil. • Lubricate the self-propel drive.
Every 100 hours	• Replace the spark plug (refer to your engine operator's manual). • Clean the cooling system (refer to your engine operator's manual).
Yearly or before storage	• Empty the fuel tank before repairs as directed or before annual storage.

Important: Refer to your engine operator's manual for additional maintenance procedures.

Preparing for Maintenance

1. Stop the engine and wait for all moving parts to stop.
2. Disconnect the spark plug wire from the spark plug before performing any maintenance procedure (Figure 28).

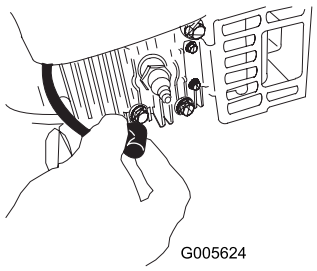

Figure 28

3. After performing the maintenance procedure(s), connect the spark plug wire to the spark plug.

Note: Before tipping the mower to change the oil or replace the blade, allow the fuel tank to run dry through normal usage. If you must tip the mower prior to running out of fuel, use a hand fuel pump to remove the fuel. Always tip the mower onto its side (with the air filter up).

Tipping the mower may cause the fuel to leak. Gasoline is flammable, explosive and can cause personal injury.

Run the engine dry or remove the gasoline with a hand pump; never siphon.

Replacing the Air Filter

Replace the air filter yearly; replace it more frequently in dusty operating conditions.

Refer to Preparing for Maintenance.

1. Use a screw driver to open the air filter cover (Figure 29).

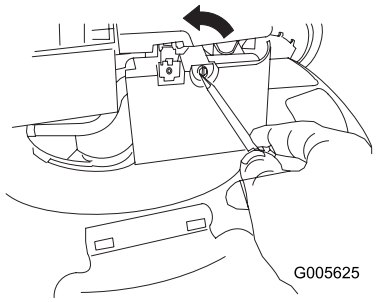

Figure 29

2. Replace the air filter (Figure 30).

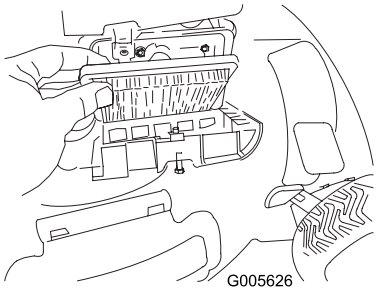

Figure 30

3. Install the cover.

Changing the Engine Oil

Change the engine oil after the first 5 operating hours; change it yearly thereafter.

Run the engine a few minutes before changing the oil to warm it. Warm oil flows better and carries more contaminants.

1. Refer to Preparing for Maintenance.
2. Remove the dipstick (Figure 31).

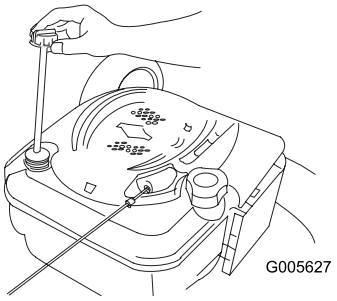

Figure 31

3. Tip the mower onto its side (with the air filter up) to drain the used oil out through the oil fill tube (Figure 32).

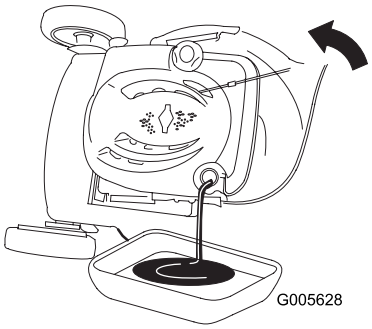

Figure 32

4. **Slowly** pour oil into the oil fill tube until the oil level reaches the Full line on the dipstick (Figure 33). **Do not overfill.** (Max. fill: 0.59 l, type: SAE 30W detergent oil with an API service classification of SF, SG, SH, SJ, SL, or higher.)

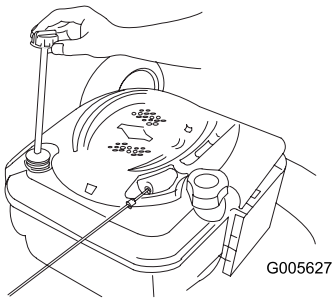

Figure 33

5. Install the dipstick securely.
6. Dispose of the used oil properly at a local recycling center.

Lubricating the Self-propel Drive

1. Wipe the grease fittings on the rear wheel height adjustment levers with a clean rag (Figure 34).

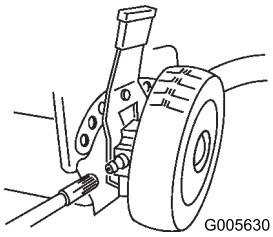

Figure 34

1. Grease fitting

2. Install a grease gun onto each fitting in turn and gently apply 1 or 2 pumps of #2 multi-purpose lithium grease to each.

Important: Excess grease may damage the seals and prevent the wheel clutch from properly operating.

Replacing the Blade

Important: You will need a torque wrench to install the blade properly. If you do not have a torque wrench or are uncomfortable performing this procedure, contact an Authorized Service Dealer.

Examine the blade whenever you run out of gasoline. If the blade is damaged or cracked, replace it immediately. If the blade edge is dull or nicked, have it sharpened or replace it.

The blade is sharp; contacting the blade can result in serious personal injury.

Wear cloth or leather gloves when servicing the blade.

1. Disconnect the spark plug wire from the spark plug and hook it onto the retaining post. Refer to Preparing for Maintenance.
2. Tip the mower onto its side (with the air filter up).
3. Use a block of wood to hold the blade steady (Figure 35).

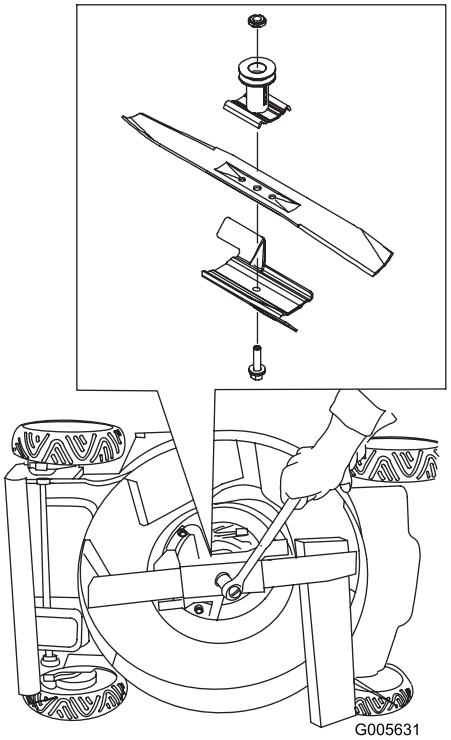

Figure 35

4. Remove the blade, saving all mounting hardware.
5. Install the new blade and all mounting hardware (Figure 35).

   Important: Position the curved ends of the blade to point toward the mower.

6. Use a torque wrench to tighten the blade bolt to 82 N·m.

   Important: A bolt torqued to 82 Nm is very tight. While holding the blade with a block of wood, put your weight behind the ratchet or wrench and tighten the bolt securely. This bolt is very difficult to overtighten.

Cleaning the Mower

1. With the engine running on a flat paved surface, spray a stream of water in front of the right rear wheel (Figure 36).

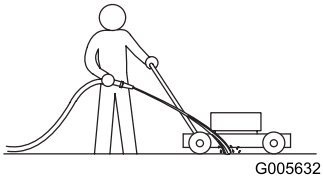

Figure 36

   Note: The water will splash into the path of the blade, cleaning out the clippings.

2. When no more clippings come out, stop the water and move the mower to a dry area.
3. Run the engine for a few minutes to dry the housing to prevent it from rusting.

Storage

Store the mower in a cool, clean, dry place.

Preparing the Mower for Storage

Gasoline vapors can explode.

- **Do not store gasoline more than 30 days.**
- **Do not store the mower in an enclosure near an open flame.**
- **Allow the engine to cool before storing it.**

1. On the last refueling of the year, add fuel stabilizer to the fuel as directed by the engine manufacturer.
2. Run the mower until the engine stops from running out of fuel.
3. Prime the engine and start it again.
4. Allow the engine to run until it stops. When you can no longer start the engine, it is sufficiently dry.
5. Remove the wire from the spark plug and connect the wire onto the retaining post.
6. Remove the spark plug, add 30 ml of oil through the spark plug hole, and pull the starter rope slowly several times to distribute oil throughout the cylinder to prevent cylinder corrosion during the off-season.
7. Loosely install the spark plug.
8. Tighten all nuts, bolts, and screws.

Folding the Handle

1. Push in the right bottom handle end until the handle slides past the stops on the handle brackets (Figure 37).

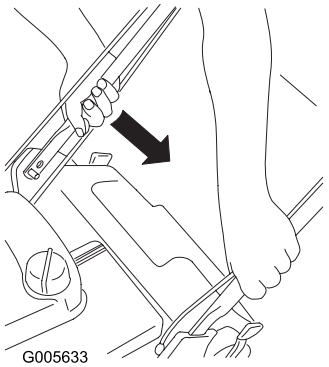

Figure 37

2. Rotate the handle forward (Figure 38).

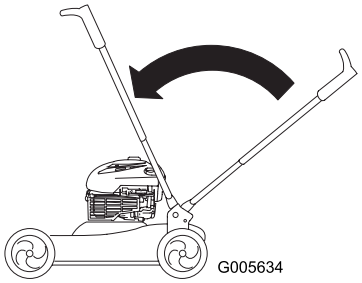

Figure 38

3. To unfold the handle, simply return the handle to the operating position (Figure 39).

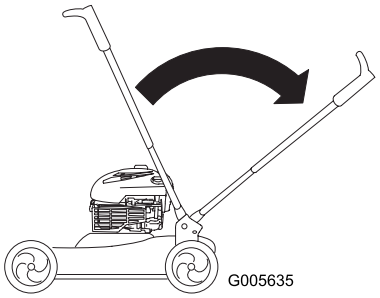

Figure 39

Removing the Mower from Storage

1. Remove the spark plug and spin the engine rapidly using the starter to blow the excess oil from the cylinder.
2. Install the spark plug and tighten it with a torque wrench to 20 N·m.
3. Connect the wire to the spark plug.

International Distributor List—Consumer Products

Distributor:	Country:	Phone Number:
Atlantis Su ve Sulama Sisstemleri Lt	Turkey	90 216 344 86 74
Balama Prima Engineering Equip	Hong Kong	852 2155 2163
B-Ray Corporation	Korea	82 32 551 2076
Casco Sales Company	Puerto Rico	787 788 8383
Ceres S.A	Costa Rica	506 239 1138
CSSC Turf Equipment (pvt) Ltd	Sri Lanka	94 11 2746100
Cyril Johnston & Co	Nothern Ireland	44 2890 813 121
Equiver	Mexico	52 55 539 95444
Femco S.A.	Guatemala	502 442 3277
G.Y.K. Company ltd.	Japan	81 726 325 861
Geomechaniki of Athens	Greece	30 10 935 0054
Guandong Golden Star	China	86 20 876 51338
Hako Gorund and Garden	Sweden	46 35 10 0000
Hydroturf Int. Co	Dubai United Arab Emirates	97 14 347 9479
Hydroturf Egypt LLC	Egypt	202 519 4308
Ibea S.p.A.	Italy	39 0331 853611
Irriamc	Portugal	351 21 238 8260
Jean Heybroek b.v.	Netherlands	31 30 639 4611
Lely (U.K.) Limited	United Kingdom	44 1480 226 800
Maquiver S.A.	Colombia	57 1 236 4079
Maruyama Mfg. Co. Inc.	Japan	81 3 3252 2285
Metra Kft	Hungary	36 1 326 3880
Mountfield a.s.	Czech Republic	420 255 704 220
Munditol S.A.	Argentina	54 11 4 821 9999
Oslinger Turf Equipment SA	Ecuador	593 4 239 6970
Oy Hako Ground and Garden Ab	Finland	358 987 00733
Parkland Products Ltd	New Zealand	64 3 34 93760
Prochaska & Cie	Austria	43 1 278 5100
RT Cohen 2004 Ltd	Israel	972 986 17979
Riversa	Spain	34 9 52 83 7500
Roth Motorgerate GmBh & Co	Germany	49 7144 2050
Sc Svend Carlsen A/S	Denmark	45 66 109 200
Solvert S.A.S	France	33 1 30 81 77 00
Spypros Stavrinides Limited	Cyprus	357 22 434131
Surge Systems India Limited	India	91 1 292299901
T-Markt Logistics Ltd	Hungary	36 26 525 500
Toro Australia	Australia	61 3 9580 7355
Toro Europe BVBA	Belgium	32 14 562 960

The Toro Warranty

Conditions and Products Covered

The Toro® Company and its affiliate, Toro Warranty Company, pursuant to an agreement between them, jointly promises to the original purchaser* to repair any Toro Product used for normal residential purposes* if defective in materials or workmanship. The following time periods apply from the date of original purchase:

Products	Warranty Period
Walk Power Mowers	2-year limited warranty
Rear Engine Riders	2-year limited warranty
Lawn & Garden Tractors	2-year limited warranty
Electric Hand Held Products	2-year limited warranty
Snowthrowers	2-year limited warranty
Consumer Zero Turn	2-year limited warranty

* "Original purchaser" means use the person who originally purchased Toro products.

* "Normal residential purposes" means use of the product on the same lot as your home. Use at more than one location is considered commercial use, and the commercial use warranty would apply.

Limited Warranty for Commercial Use

Toro Consumer Products and attachments used for commercial, institutional, or rental use are warranted against defects in materials or workmanship for the following time periods from the date of original purchase:

Products	Warranty Period
Walk Power Mowers	90 day warranty
Rear Engine Riders	90 day warranty
Lawn & Garden Tractors	90 day warranty
Electric Hand Held Products	90 day warranty
Snowthrowers	90 day warranty
Consumer Zero Turn	45 day warranty

Instructions for Obtaining Warranty Service

If you think that your Toro Product contains a defect in materials or workmanship, follow this procedure:

1. Contact your seller to arrange service of the product. If for any reason it is impossible for you to contact your seller, you may contact any Toro Authorized Distributor to arrange service.
2. Bring the product and your proof of purchase (sales receipt) to your seller or the Service Dealer.

If for any reason you are dissatisfied with the Service Dealer's analysis or with the assistance provided, contact the Toro importer or contact us at:

Customer Care Department, Consumer Division
Toro Warranty Company
8111 Lyndale Avenue South
Bloomington, MN 55420-1196
Manager: Technical Product Support: 001-952-887-8248

See attached Distributor List

Owner Responsibilities

You must maintain your Toro Product by following the maintenance procedures described in the operator's manual. Such routine maintenance, whether performed by a dealer or by you, is at your expense.

Items and Conditions Not Covered

This express warranty does not cover:

- Cost of regular maintenance service or parts, such as filters, fuel, lubricants, tune-up parts, blade sharpening, brake and clutch adjustments.
- Any product or part which has been altered or misused or required replacement or repair due to normal wear, accidents, or lack of proper maintenance.
- Repairs necessary due to improper fuel, contaminants in the fuel system, or failure to properly prepare the fuel system prior to any period of non-use over three months.
- Engine and transmission. These are covered by the appropriate manufacturer's guarantees with separate terms and conditions.

All repairs covered by this warranty must be performed by an Authorized Toro Service Dealer using Toro approved replacement parts.

General Conditions

The purchaser is covered by the national laws of each country. The rights to which the purchaser is entitled with the support of these laws are not restricted by this warranty.