FORM NO. 3314-471

TORO®

MODEL NO.51570-1000001 & UP

PARTS CATALOG

YARD BLOWER VAC

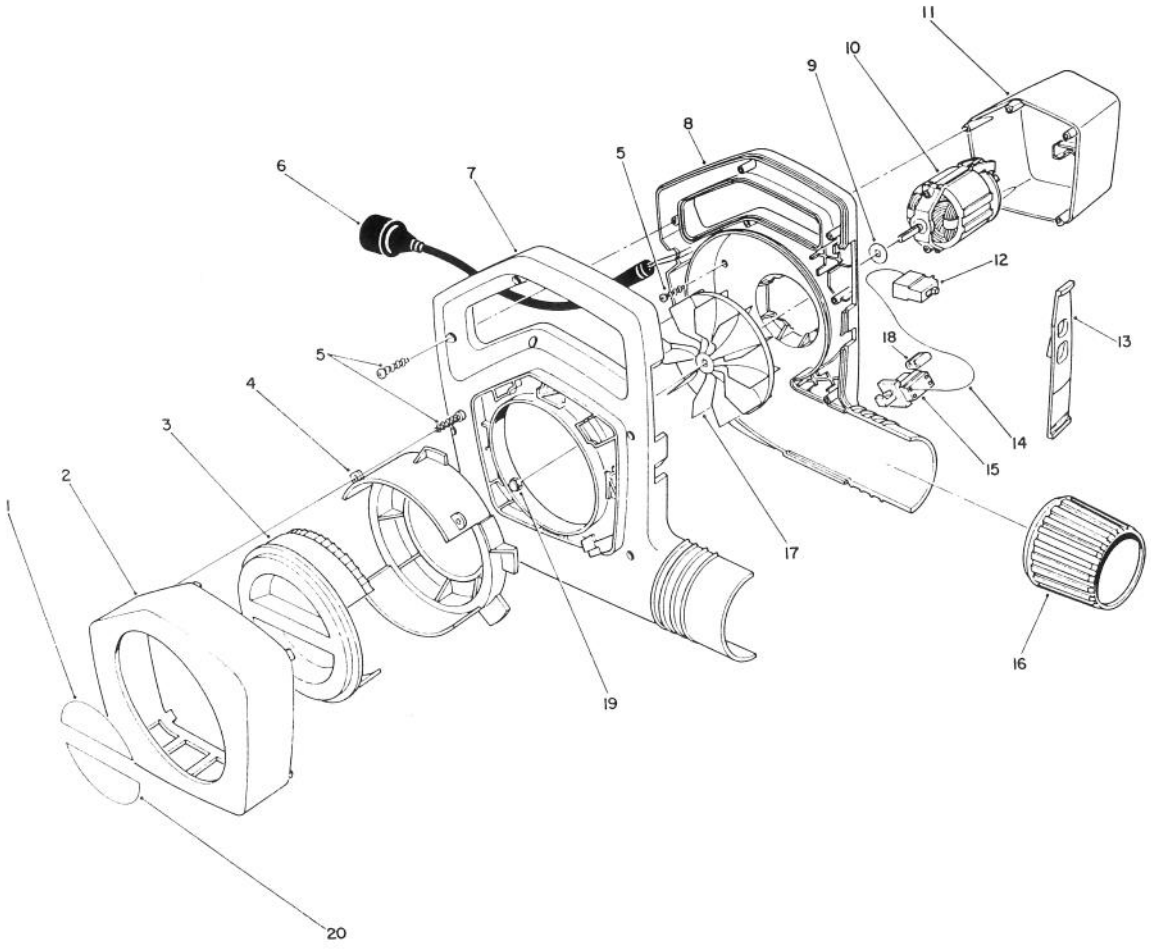

C-0133

BLOWER ASSEMBLY

Ref. No.	Part No.	Description	No. Used
1	64-8930	Decal - Choke, Upper	1
2	57-1051	Ring - Trim	1
3	57-1021	Adjuster - Choke	1
4	57-1040	Ring - Tab	1
5	32104-121	Screw	17
6	42-0778	Cord - Power Supply	1
7	60-9612	Housing Assembly - R.H.	1
8	61-8431	Housing - L.H.	1
9	57-4270	Washer - Impeller	2
10	57-5961	Motor	1
11	57-1073	Cover - Motor	1

Ref. No.	Part No.	Description	No. Used
12	57-5890	Switch - On/Off	1
13	57-5920	Cam - Switch, On/Off	1
14	57-4280	Wire - Internal	2
15	57-5910	Switch - Interlock	1
16	57-3260	Collar - Output	1
17	57-3861	Impeller	1
18	64-8990	Plug - Dust	1
19	32111-8	Nut - Cap	1
20	64-8940	Decal - Choke, Lower	1

TPS

©The TORO Company - 1990

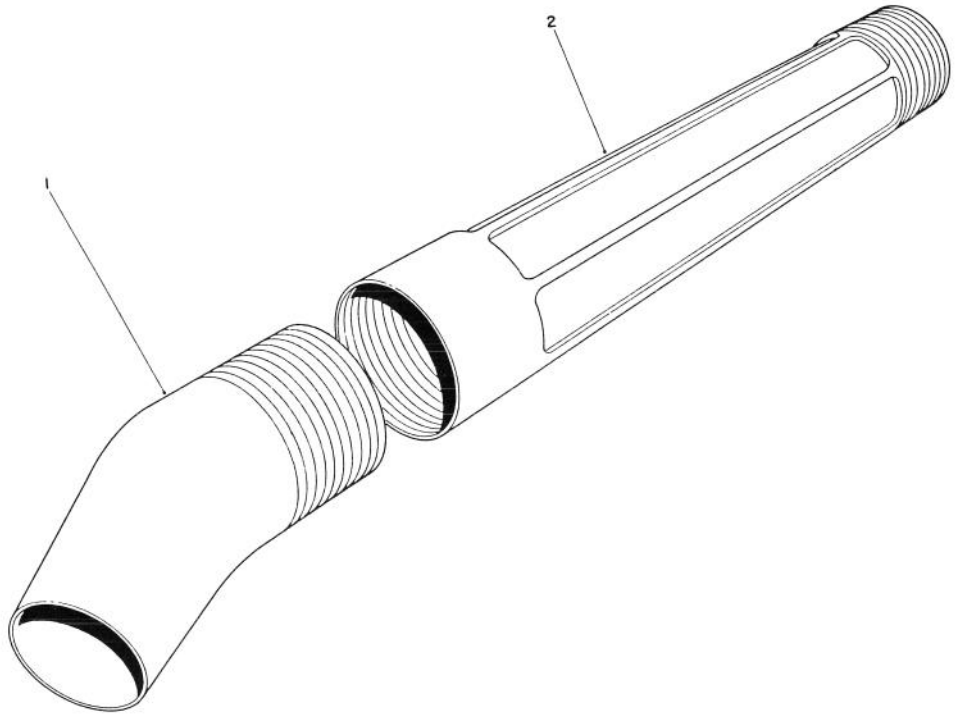

C-0154

BLOWER TUBE ASSEMBLY

Ref. No.	Part No.	Description	No. Used
1	57-3280	Nozzle - Concentrating	1
2	57-3270	Tube - Blower	2

Ref. No.	Part No.	Description	No. Used

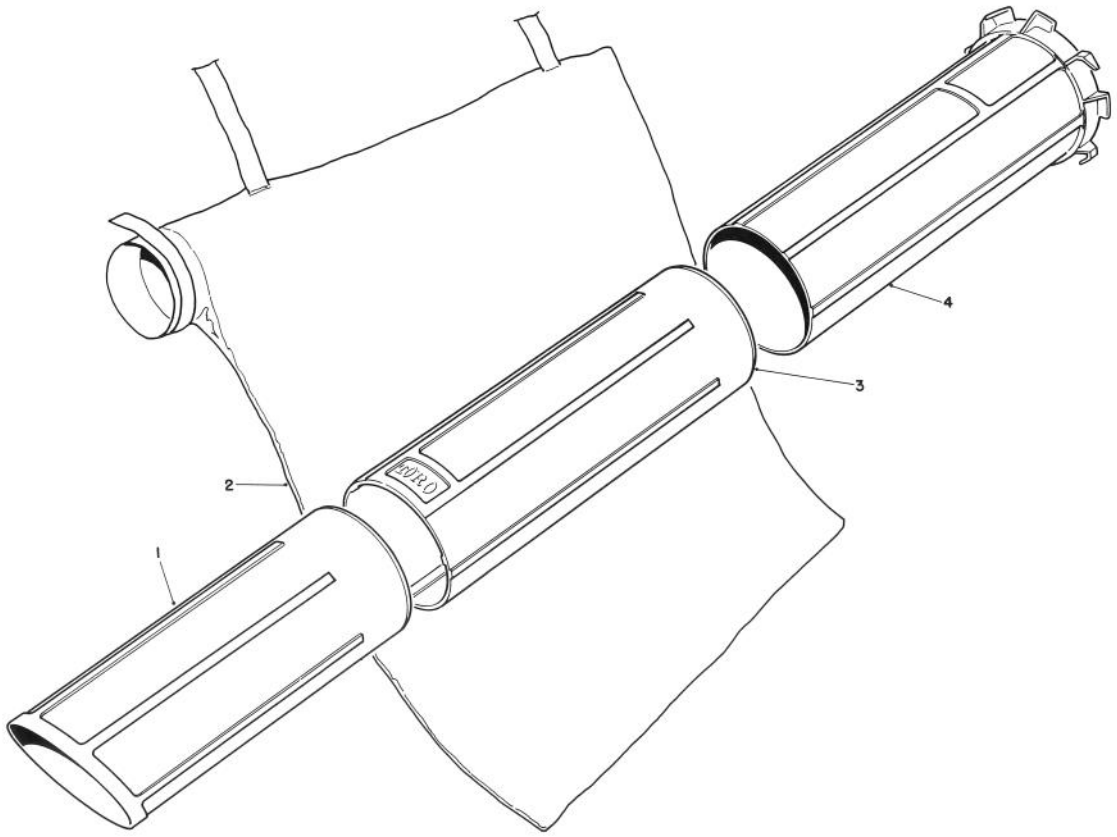

C-0613

VACUUM TUBE AND BAGGING KIT Model No. 51533

Ref. No.	Part No.	Description	No. Used
1	73-1640	Bag - Vacuum	1
2	73-1440	Tube - Vacuum, Upper	1

Ref. No.	Part No.	Description	No. Used
3	73-1460	Tube - Vaccum, Lower	1
4	73-1450	Tube - Vacuum, Middle	1

MAINTENANCE RECORD

Date								