FORM NO. 3314-500

TORO

MODEL NO. 20212-1000001 & UP

PARTS CATALOG

18" H.P. REAR BAGGER

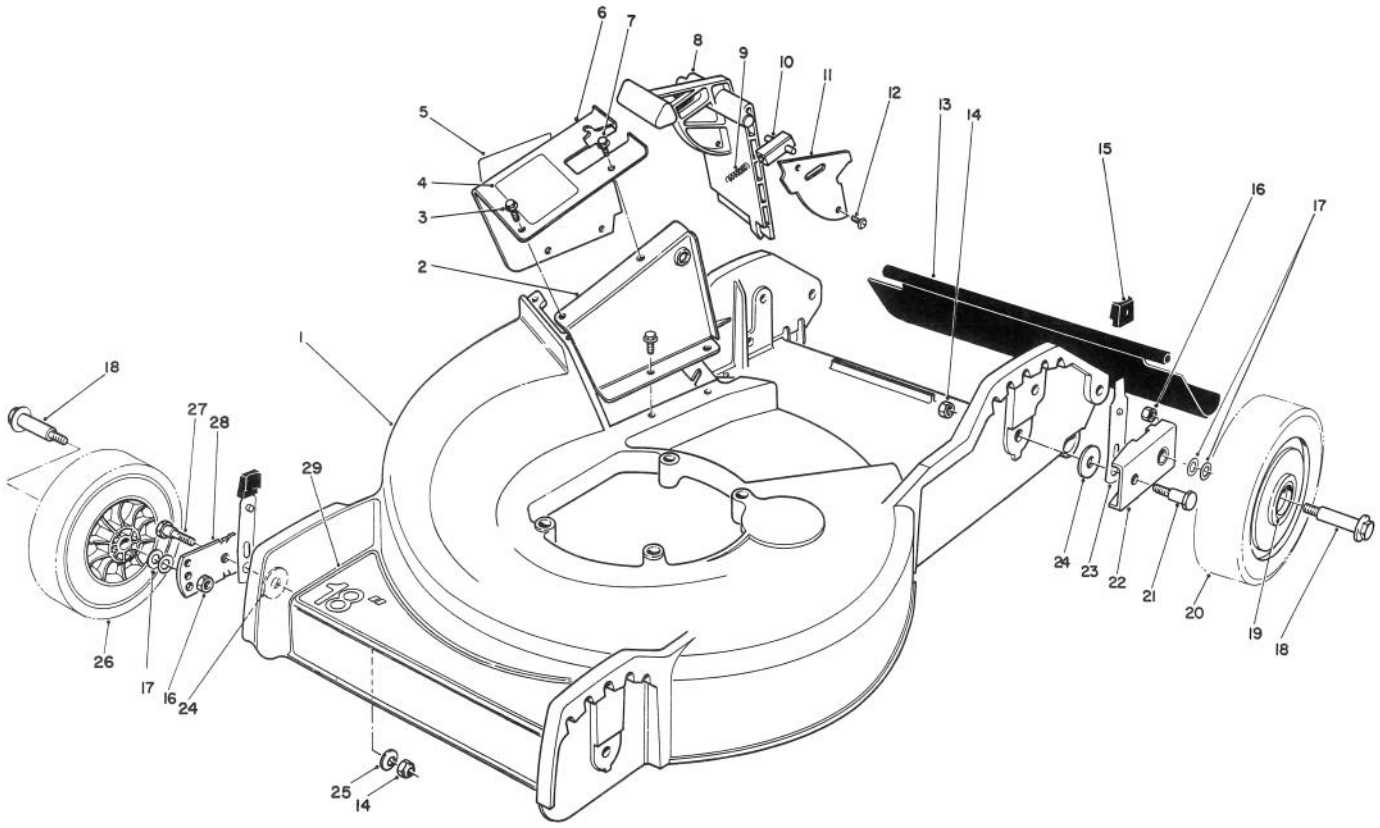

C-0321

HOUSING ASSEMBLY

Ref. No.	Part No.	Description	No. Used
1	12-1089	Housing 18"	1
2	49-8030	Tunnel - Inner	1
3	12-3270	Screw - Thread Forming	6
4	62-4060	Decal - Door	1
5	56-6270	Decal Danger	1
6	11-8409	Tunnel - Outer (Incl. Ref. #4 & 5)	1
7	12-5450	Screw - Thread Forming	1
8	33-0411	Door - Mulching	1
9	33-0450	Spring - Latch	1
10	47-5550	Latch - Door	1
11	33-0441	Cover - Door	1
12	32144-32	Screw - Thread Forming	2
13	33-2380	Rear Safety Shield	1
14	3296-29	Locknut	4
15	25-7740	Knob-Arm	4
16	52-3620	Locknut	4
17	40-1940	Washer-Wheel Bolt	8
18	27-6230	Wheel Bolt	4
19	27-6250	Bushing	8
20	11-9509	Wheel & Tire Assembly (Incl. Ref. #19)	2
21	44-5271	Pivot -Screw	2
22	47-2941	Pivot Arm Assembly	2
23	25-8000	Spring Arm Assembly	4
24	33-0390	Pivot Washer	4
25	3290-456	Washer - Belleville	2
26	46-1113	Wheel & Tire Assembly (Incl. Ref. #19)	2
27	3-0655	Pivot Screw	2
28	33-0400	Pivot Arm Assembly	2
29	75-9410	Decal - Deck	1

TPS

©The TORO Company - 1990

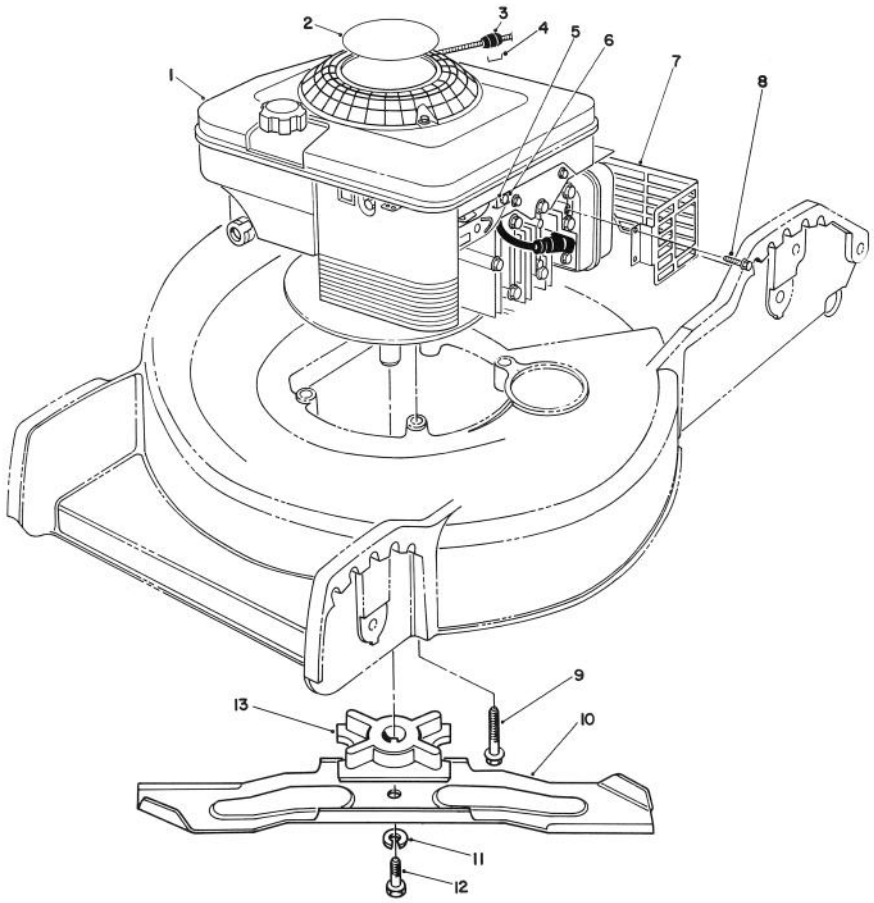

C-0322

ENGINE ASSEMBLY

Ref. No.	Part No.	Description	No. Used
1		Engine	1
2	80-2860	Decal - Engine	1
3		Stop - Rope	1
†4		Staple	1
5	2210-249	Clamp - Casing	1
6	2210-313	Screw - Clamp	1
7	82-8550	Shield - Muffler	1

Ref. No.	Part No.	Description	No. Used
8	32144-73	Screw - Hex Hd. Thr'd Form	3
9	32144-106	Screw - Engine	3
10	33-0490	Blade - 18"	1
11	3253-22	Lockwasher	1
12	26-0671	Screw - Blade	1
13	49-7900	Retainer - Blade	1

† Obtain Locally

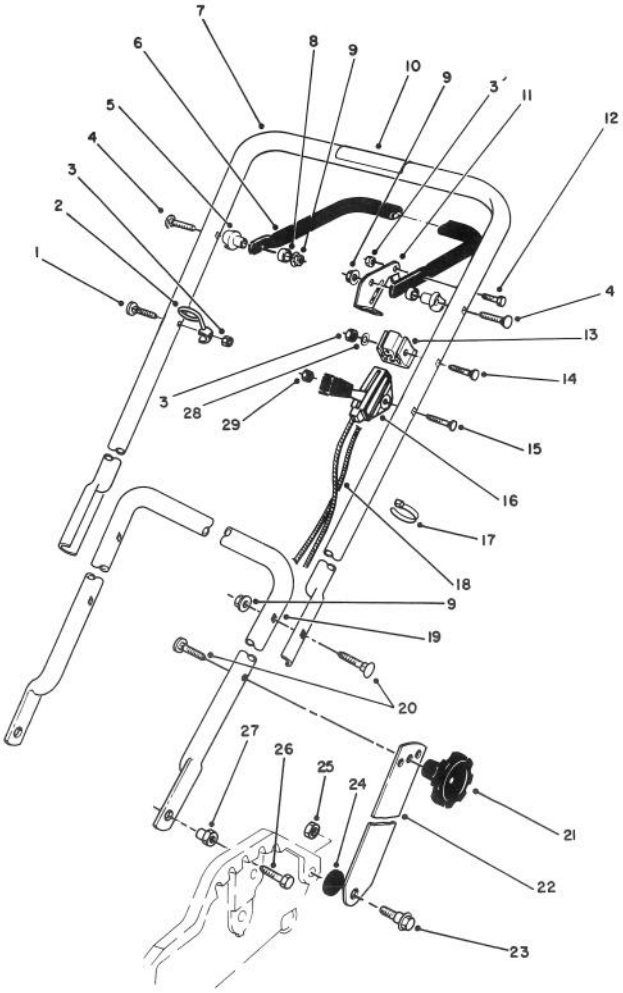

C-0323

HANDLE & THROTTLE CONTROL ASSEMBLY

Ref. No.	Part No.	Description	No. Used
1	46-6433	Screw - Guide	1
2	46-8080	Guide - Rope	1
3	3296-42	Locknut	3
4	17-9421	Screw - Handle	2
5	49-1630	Support - Spacer	2
6	49-4221	Bar - Control	1
7	13-2159	Handle - Upper (Incl. Ref. #10)	1
8	256-276	Bushing - Nylon	2
9	3296-58	Locknut - Flanged	2
10	63-8540	Decal - Warning	1
11	66-5350	Lever - Control	1
12	321-3	Capscrew - Hex. Hd.	1
13	46-6980	Support - Cable	1
14	46-6434	Screw - Handle	1
15	46-6430	Screw - Handle	1

Ref. No.	Part No.	Description	No. Used
16	76-3247	Control - Throttle (Bend #1, 46" Lg) (Wire Lg 1-3/4" Lg.)	1
17	3290-378	Tie - Cable	2
18	76-4334	Cable Brake	1
19	50-9920	Handle - Lower	1
20	17-9424	Screw - Handle	4
21	19-4050	Knob - Handle	2
22	43-1370	Latch - Handle	2
23	27-7210	Screw - Shoulder	2
24	3-3287	Spacer - Latch Handle	2
25	3296-29	Locknut	2
26	322-5	Capscrew - Hex. Hd.	2
27	12-2080	Nut - Shoulder	2
28	3256-22	Washer - Flat	1
29	3296-56	Locknut	1

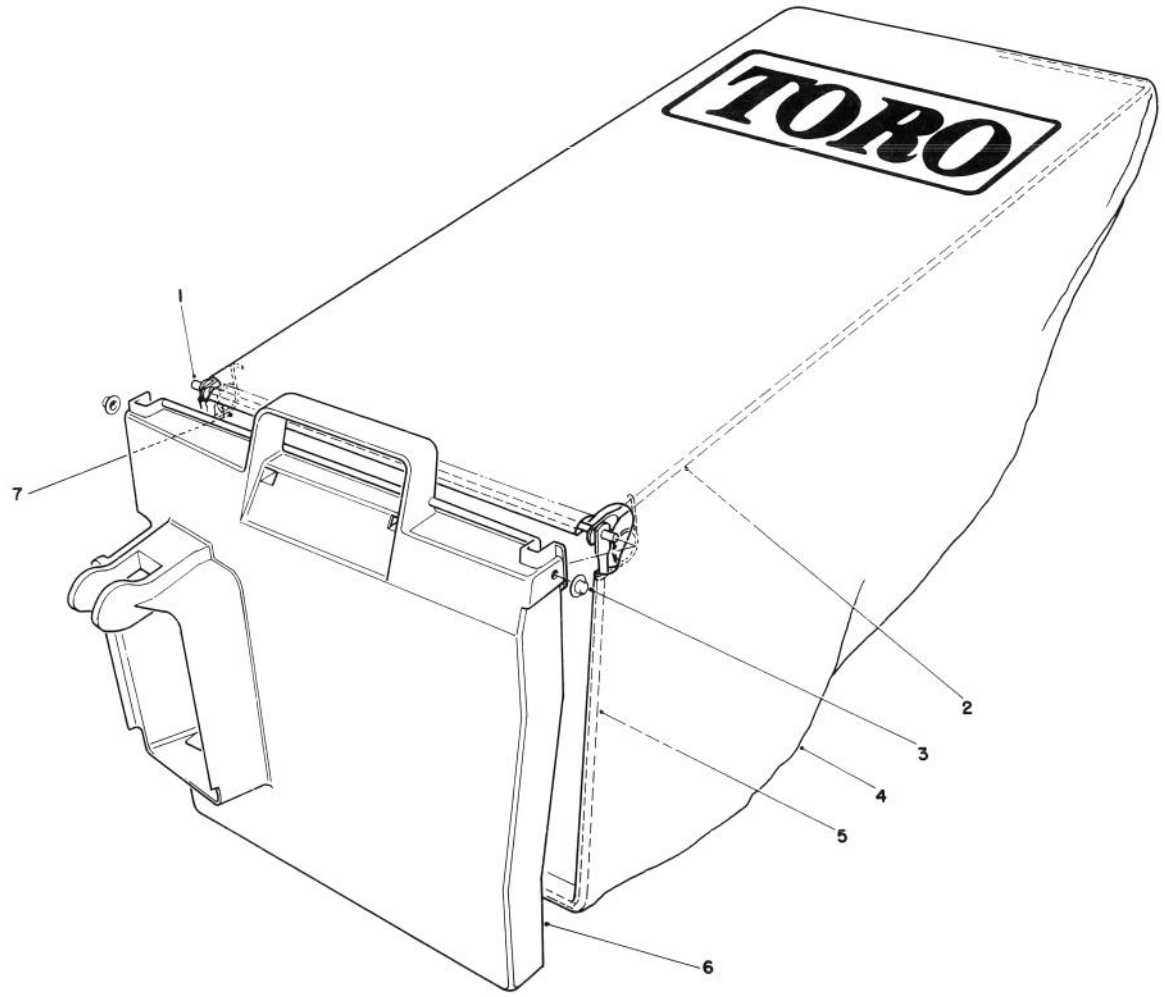

C-0324

GRASS BAG ASSEMBLY NO. 12-8859

Ref. No.	Part No.	Description	No. Used
1	50-9670	Hinge	1
2	66-1520	Frame - Bag, Upper	1
3	3290-422	Push Nut Washer Cap	2
4	66-1510	Bag	1

Ref. No.	Part No.	Description	No. Used
5	66-1530	Frame Bag	1
6	33-2981	Door - Bag	1
7	36-6910	Spring	2

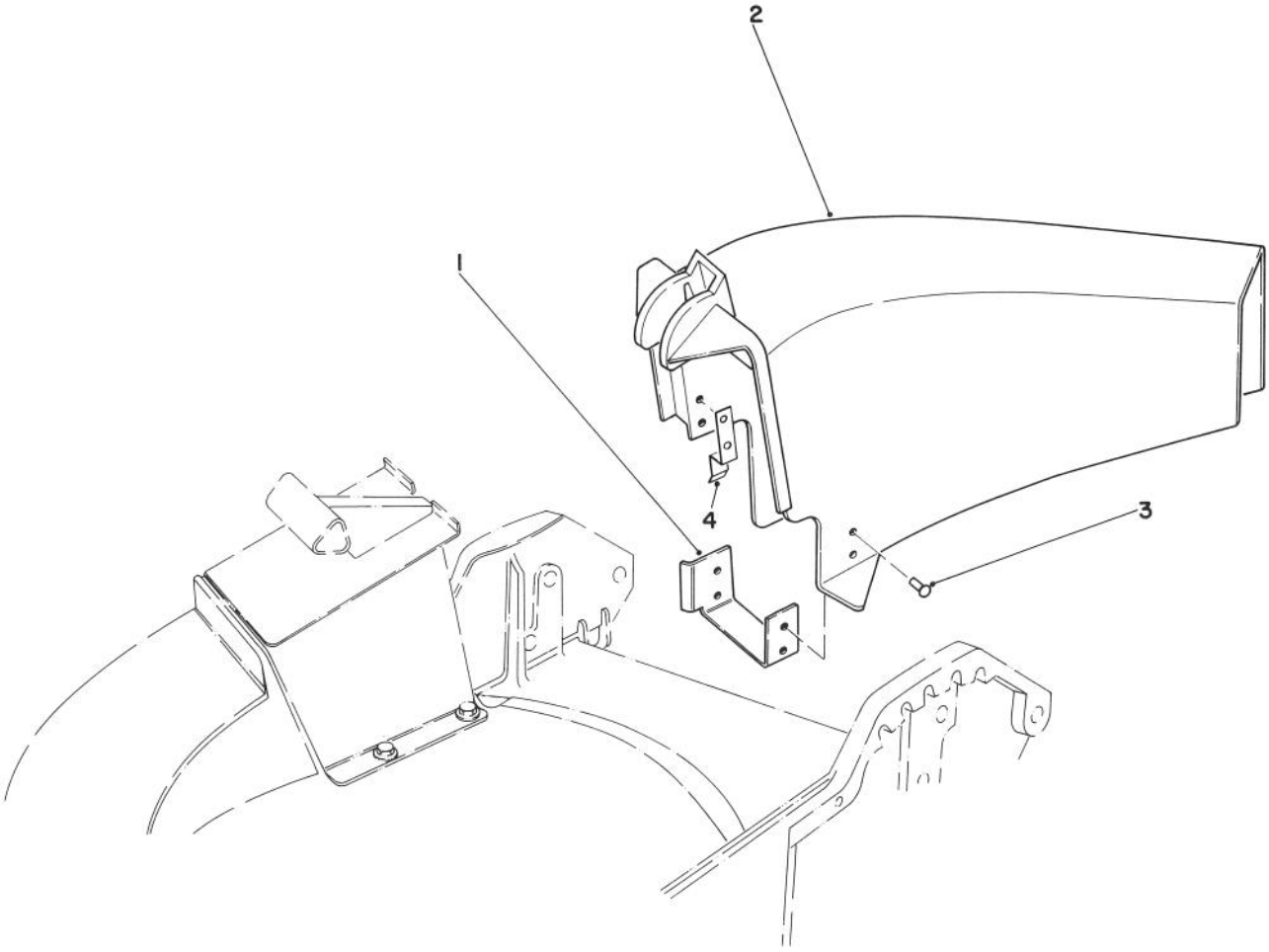

C-0325

SIDE DISCHARGE KIT NO. 59107 (Optional)

Ref. No.	Part No.	Description	No. Used
1	44-2620	Chute Bracket	1
2	44-2610	Chute Discharge	1
3	3295-29	Rivet	6
4	46-6400	Tab Chute	1

Ref. No.	Part No.	Description	No. Used

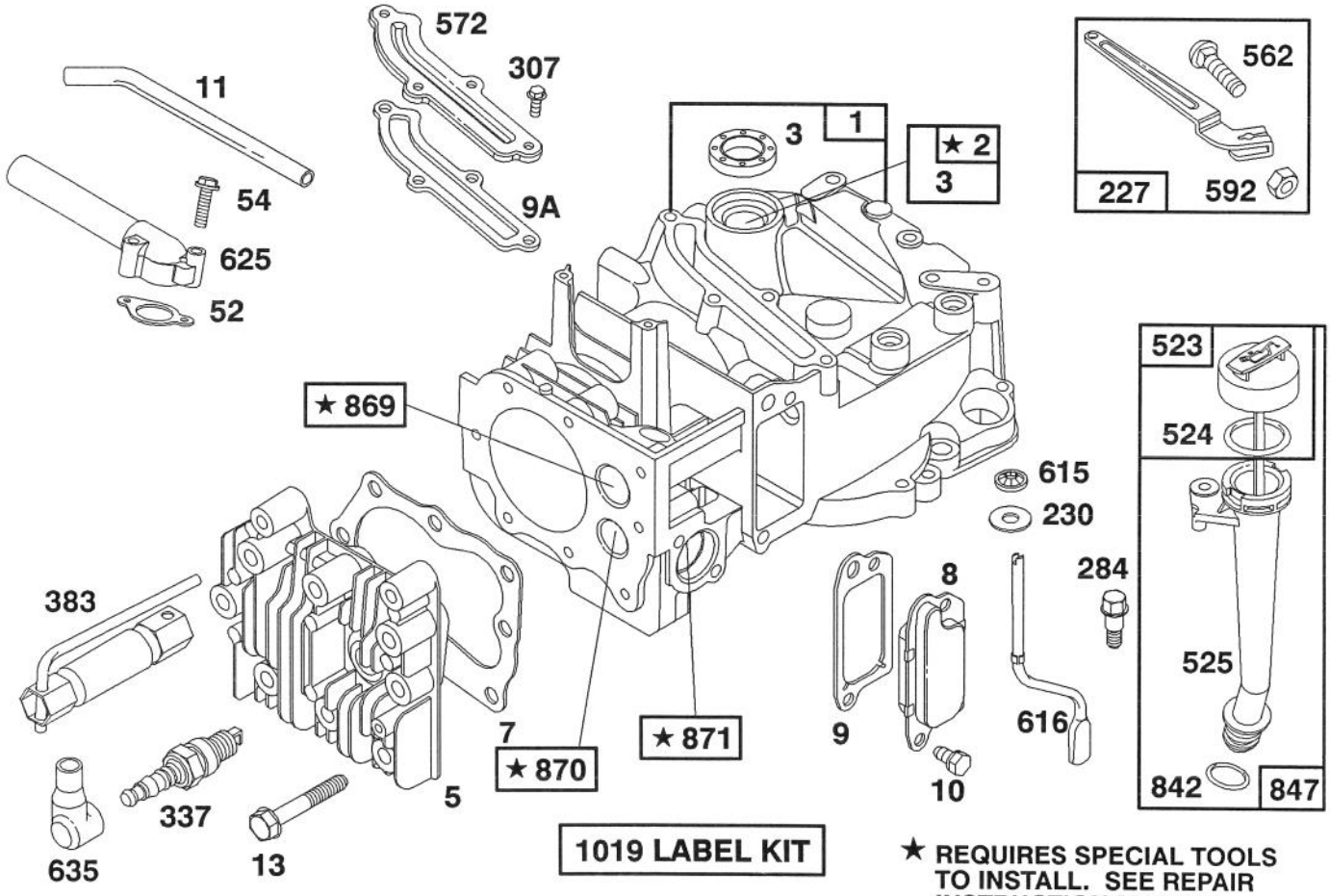

★ REQUIRES SPECIAL TOOLS TO INSTALL. SEE REPAIR INSTRUCTION MANUAL.

Assemblies include all parts shown in frames.

ENGINE BRIGGS & STRATTON MODEL 122702-3188-01

Ref. No.	Part No.	Description	No. Used
1	493260	Cylinder Assembly	1
2	293708	Bushing-Cylinder	1
		Note: Requires special tools for installation.	
★3	299819	Seal-Oil	1
5	213861	Head-Cylinder	1
★7	272200	Gasket-Cylinder Hd.	1
8	399717	Breather-Valve Chamber	1
★9	271904	Gasket-Valve Cover	1
★9A	272238	Gasket-Baffle Plate	1
10	94222	Mounting Sem	1
11	231685	Tube-Breather	1
13	94547	Screw-Cylinder Hd.	1
★52	272199	Gasket-Intake Elbow	1
54	94526	Screw-Intake Elbow Mounting	1
227	492349	Lever Assembly-Gov.	1
230	67072	Washer-Governor Crank	1
284	94511	Screw-Hex. Head	1
307	94515	Screw-Hex. Head	1
337	802592	Plug-Spark	1

Ref. No.	Part No.	Description	No. Used
383	89838	Wrench-Spark Plug	1
562	92613	Bolt-Governor Lever	1
523	493950	Cap with Dipstick-Oil Filler	1
524	280393	Seal-Filler Tube	1
562	92613	Bolt-Governor Lever	1
525	493952	Tube-Oil Filler	1
572	224328	Baffle-Cylinder	1
592	231082	Nut-Hex.	1
615	94474	Pushnut (Governor Crank)	1
616	262578	Crank-Governor	1
625	492717	Tube-Fuel Intake	1
635	66538	Elbow-Spark Plug	1
842	280966	Seal-O-Ring	1
847	493459	Oil Fill Tube and Dipstick Assy.	1
869	213512	Seat-Intake Valve	1
870	213513	Seat-Exhaust Valve	1
		Note: 63709 Guide-Intake Valve See Repair Instruction Manual.	
871	262001	Guide-Exhaust Valve	1
1019	494256	Label Kit	1

★ Included in Gasket Set-Part No. 493263

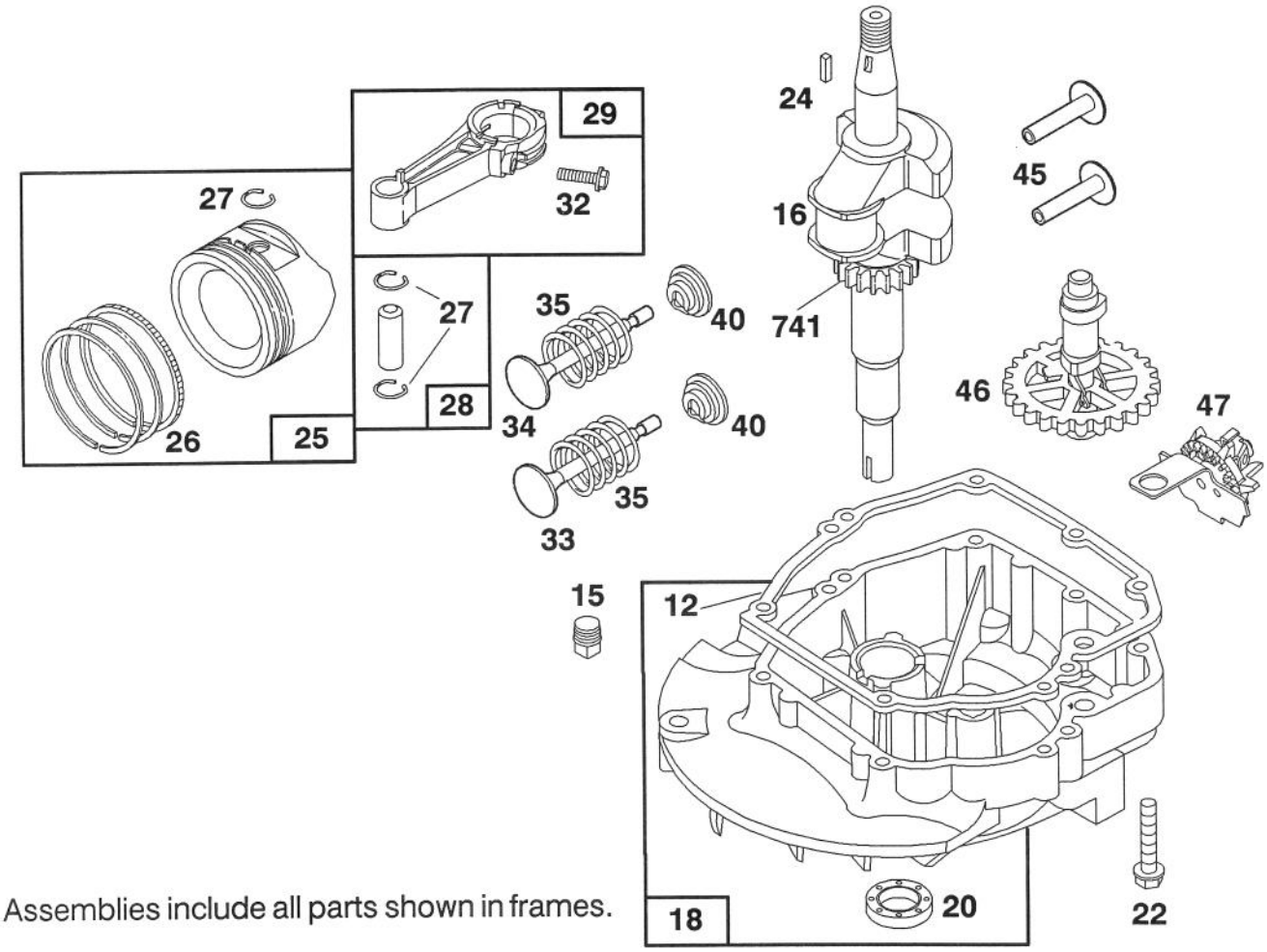

Assemblies include all parts shown in frames.

ENGINE BRIGGS & STRATTON MODEL 122702-3188-01

Ref. No.	Part No.	Description	No. Used
★12	272198	Gasket-Crankcase	1
15	93418	Plug-Oil Drain	1
16	493731	Crankshaft	1
		Note: Order 94388 For Timing Gear Key	
18	493279	Sump-Engine	1
★20	399781	Seal-Oil	1
22	94220	Screw-Sump Mtg. Sem	1
		Note: 94612 Screw-Hex. Washer Head (One (1) Used in Hole Nearest Breather)	
24	222698	Key-Flywheel	1
25	493262	Piston Assy.-Standard	1
	493385	Piston Assy.-.010" O.S.	1
	493386	Piston Assy.-.020" O.S.	1
	493387	Piston Assy.-.030" O.S.	1
		PISTON RING SETS:	
		Note: For Chrome Piston Ring Set-Standard Size-Order Part No. 493391.	

Ref. No.	Part No.	Description	No. Used
26	493261	Ring Set-Std. Piston	1
	493388	Ring Set-.010" O.S. Piston	1
	493389	Ring Set-.020" O.S. Piston	1
	493390	Ring Set-.030" O.S. Piston	1
27	26026	Lock-Piston Pin	1
28	298909	Pin Assembly-Piston- Standard	1
	298908	Pin Assembly-Piston- .005" O.S.	1
29	490566	Rod Assembly- Connecting	1
		Note:For Connecting Rod with 020" Undersize Crankpin Bearing- Order No. 490743.	
32	94405	Screw-Connecting Rod	1
33	262651	Valve-Exhaust	1
34	262652	Valve-Intake	1
35	262224	Spring-Valve	1
40	93312	Retainer-Valve Spring	1
45	262204	Tappet-Valve	1
46	492828	Gear-Cam	1
47	493737	Oil Slinger Gear and Bracket	1
741	262598	Gear-Timing	1

★ Included in Gasket Set-Part No. 493263

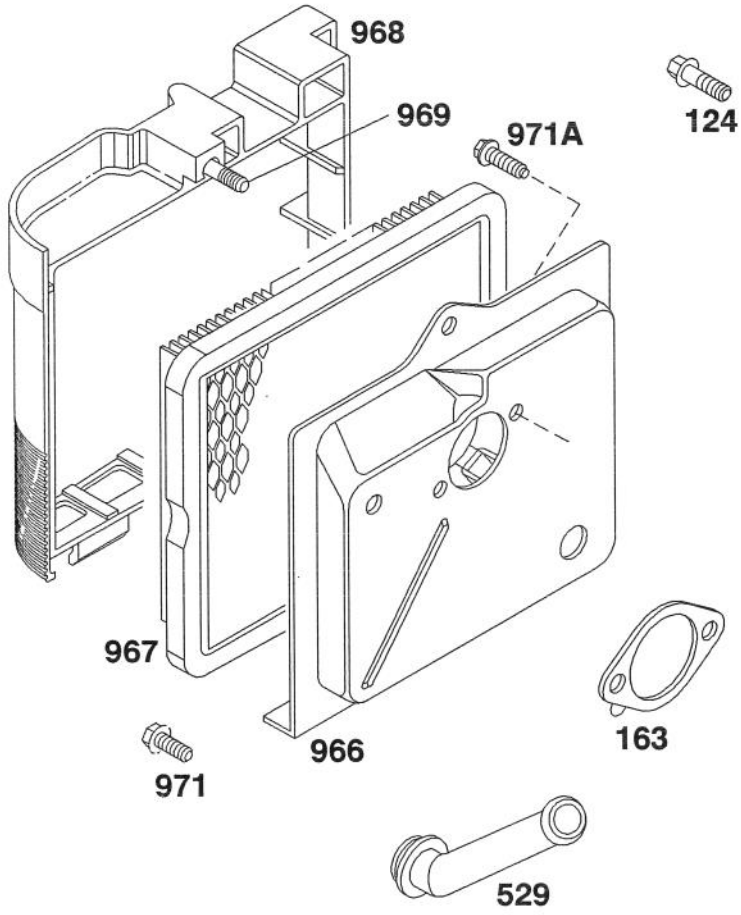

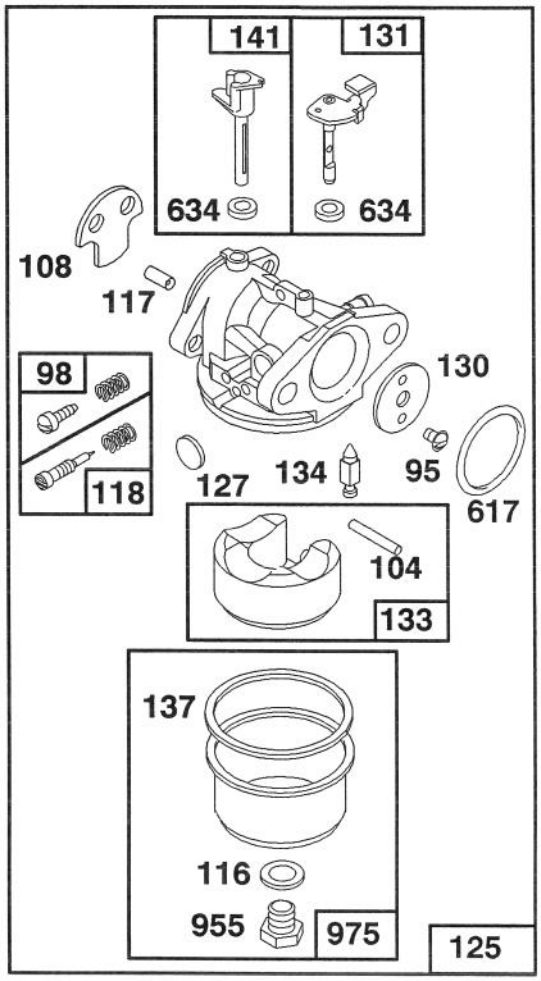

Assemblies include all parts shown in frames.

ENGINE BRIGGS & STRATTON MODEL 122702-3188-01

Ref. No.	Part No.	Description	No. Used
95	94098	Screw-Throttle Valve Mounting Sem	1
98	398185	Screw-Idle Adjustment	1
•104	231371	Pin-Float Hinge	1
108	223471	Valve-Choke	1
••◆116		Gasket-Sealing (Sold in Kit Only).	1
•117		Jet (Sold in Kit Only).	1
118	493765	Valve and Spring- Needle	1
121	493762	Carburetor Overhaul Kit	1
124	94525	Screw-Carburetor Mtg.	1
125	494216	Carburetor Assembly	1
•127		Plug-Welch (Sold in Kit Only).	1
130	223470	Valve-Throttle	1
131	493267	Shaft and Lever- Throttle	1
133	398187	Float Assy.-Carburetor	1

Ref. No.	Part No.	Description	No. Used
•134	398188	Valve-Inlet (Includes Seat)	1
••◆137		Gasket-Bowl (Sold in Kit Only).	1
141	494218	Shaft-Choke	1
★163	272296	Gasket-Air Cleaner	1
529	280943	Grommet-Breather	
••◆617	270344	Seal-Fuel Intake Tube	1
••◆634		Washer-Shaft (Sold in Kit Only)	1
955	493763	Screw-Bowl Mtg.	1
966	492363	Base-Air Cleaner	1
967	491588	Filter-Air	1
968	281069	Cover-Air Cleaner	1
969	94120	Screw-Cover Mtg.	1
971	94269	Screw-Air Cleaner	1
971A	94121	Screw-Base to Carburetor	1
975	493640	Bowl Assy.	1

• Included in Carburetor Overhaul Kit-Part No. 493762.
◆ Included in Carburetor Gasket Set-Part No. 490937.
★ Included in Gasket Set-Part No. 493263.

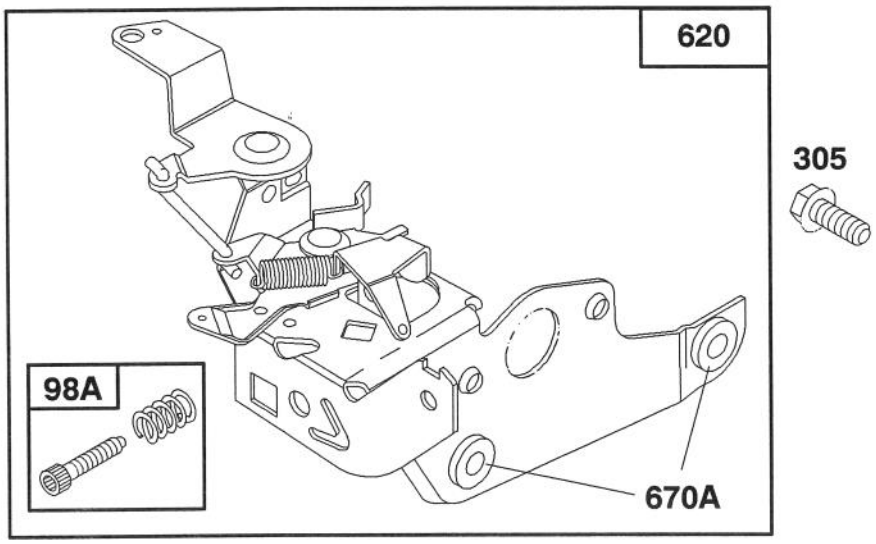

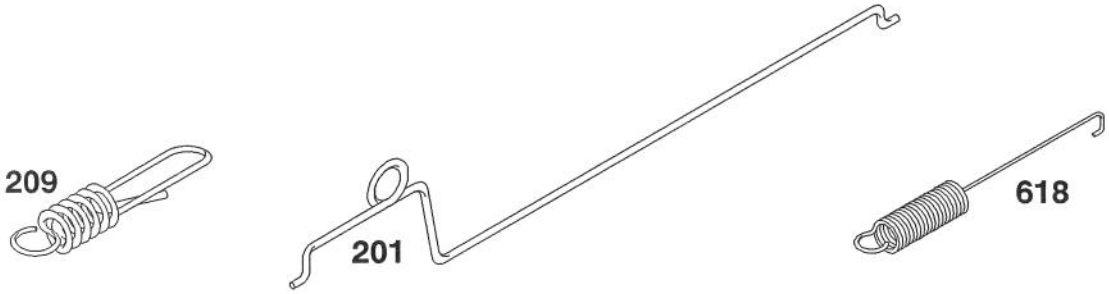

Assemblies include all parts shown in frames.

ENGINE BRIGGS & STRATTON MODEL 122702-3188-01

Ref. No.	Part No.	Description	No. Used
98A	493280	Screw Assy.-	
		Speed Adj.	1
201	262579	Link-Governor	1
209	262661	Spring-Governor	1
305	94513	Screw-Hex. Head Sem	1

Ref. No.	Part No.	Description	No. Used
618	262749	Spring-Choke Return	1
620	493894	Bracket Assembly-	1
670A	493823	Spacer-Carburetor Bracket	1

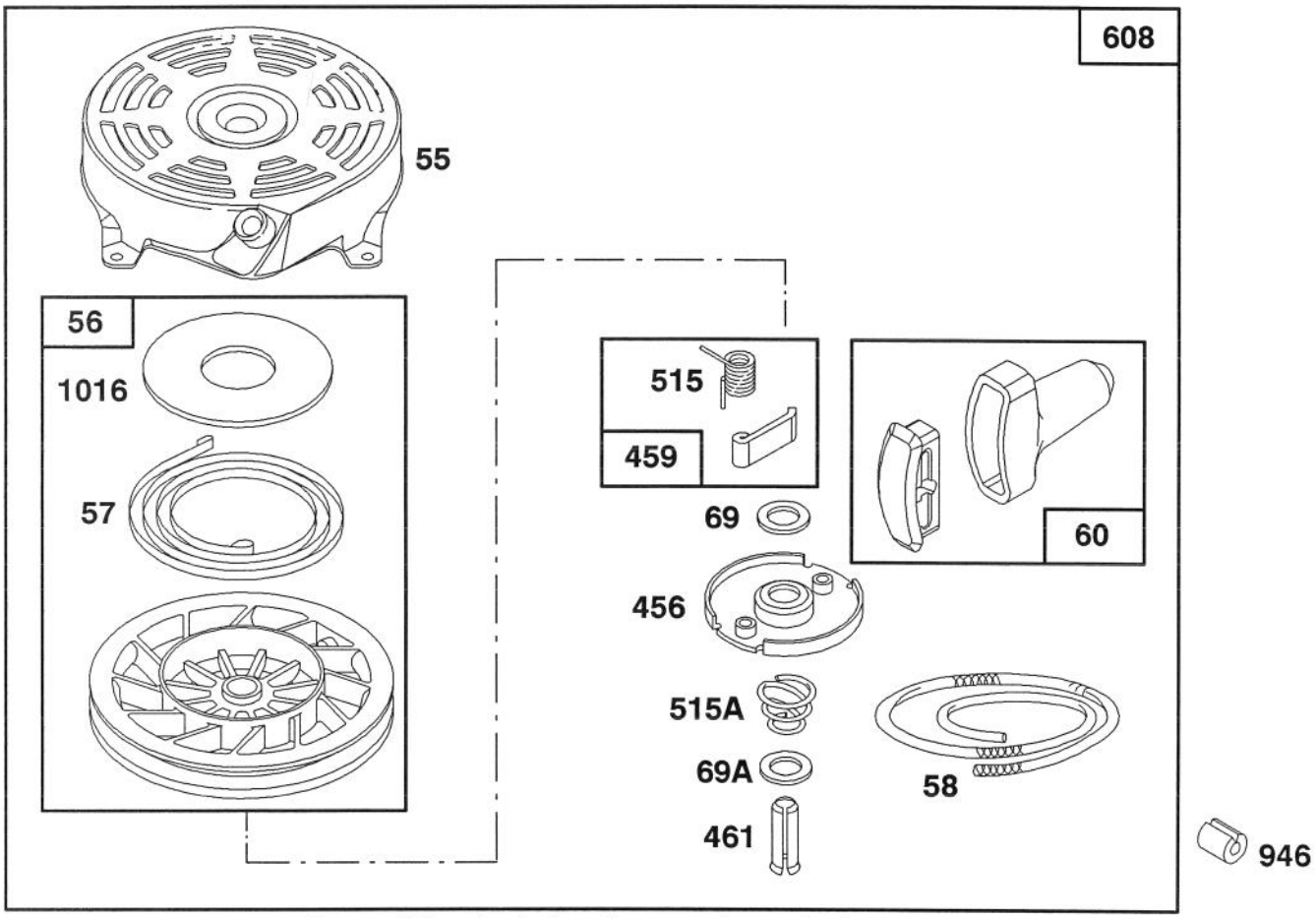

Assemblies include all parts shown in frames.

ENGINE BRIGGS & STRATTON MODEL 122702-3188-01

Ref. No.	Part No.	Description	No. Used
55	492831	Housing-Rewind Starter	1
56	492832	Pulley-Rewind Starter	1
57	262594	Spring-Rewind Starter	1
58	280399	Rope-Rewind Starter	1
60	393152	Handle-Rewind Starter	1
69	280973	Washer-Rewind Starter	1
69A	224322	Washer-Rewind Starter	1
456	224321	Retainer-Rewind Starter	1

Ref. No.	Part No.	Description	No. Used
459	492833	Pawl-Starter	1
461	262626	Pin-Starter	1
515	262556	Spring-Pawl	1
515A	262625	Spring-Torsion	1
608	493295	Starter Assy.-Rewind	1
946	223294	Stop-Rope	1
1016	224278	Cover-Rewind Starter	1

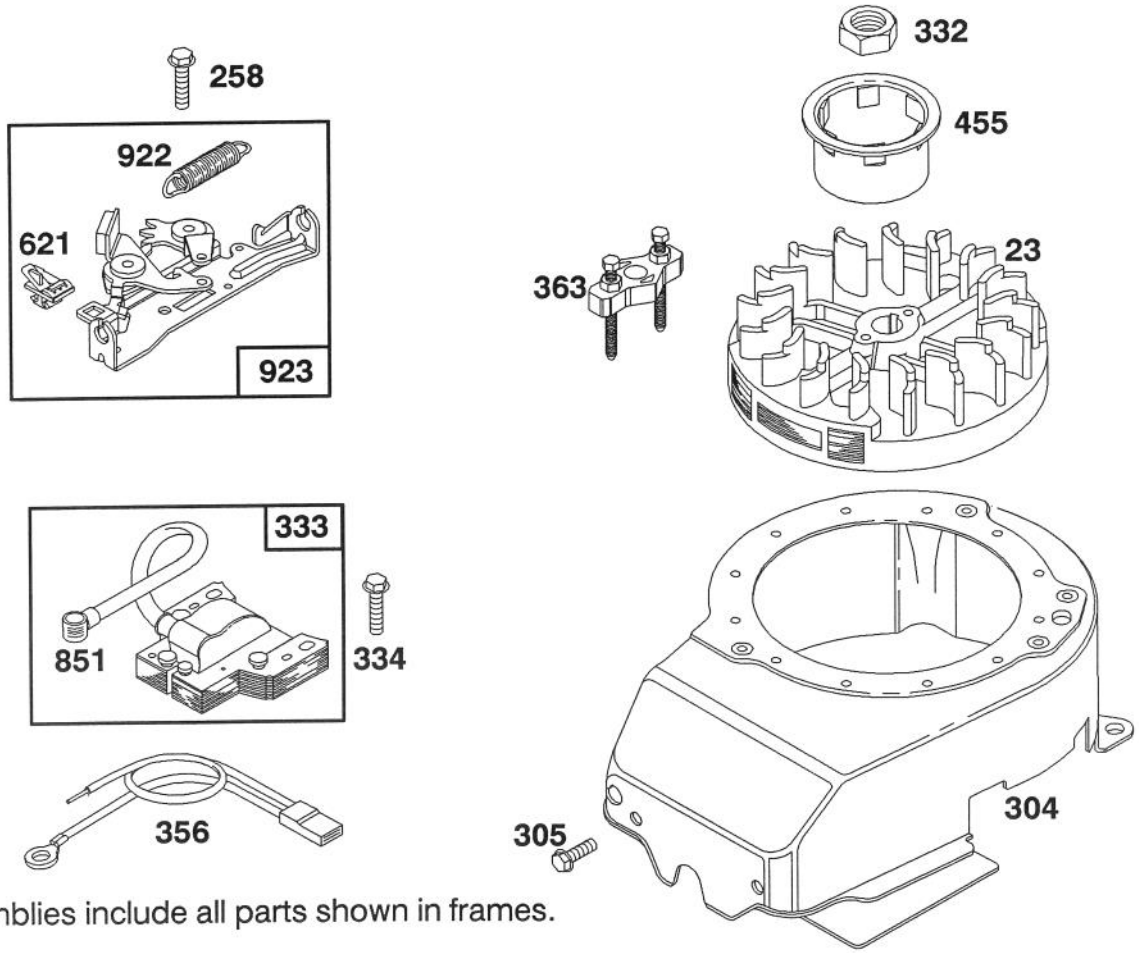

Assemblies include all parts shown in frames.

ENGINE BRIGGS & STRATTON MODEL 122702-3188-01

Ref. No.	Part No.	Description	No. Used
23	492177	Flywheel-Magneto	1
258	94512	Screw-Hex. Head	1
304	493293	Housing- Blower	1
305	94513	Screw-Hex. Head Sem	1
332	92284	Nut-Flywheel	1
333	802574	Armature-Magneto	1
334	93381	Screw-Armature Mounting Sem	1

Ref. No.	Part No.	Description	No. Used
356	398808	Wire-Ground	1
363	19069	Puller-Flywheel (Optional Accessory)	1
455	224250	Cup-Starter	1
621	396847	Switch-Stop	1
851	221798	Terminal-Ignition Cable	1
922	262640	Spring-Brake	1
923	492918	Brake Assy.	1

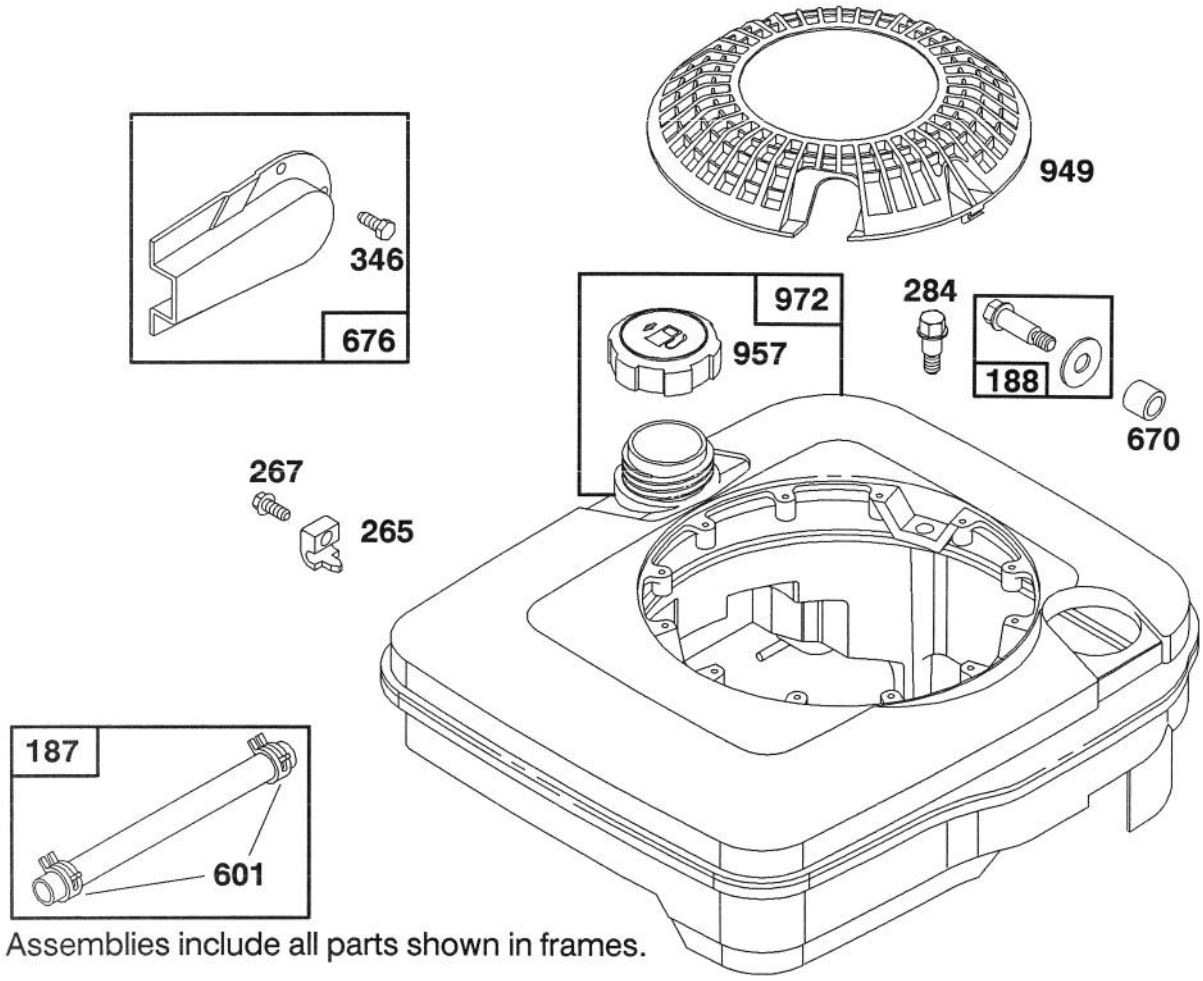

Assemblies include all parts shown in frames.

ENGINE BRIGGS & STRATTON MODEL 122702-3188-01

Ref. No.	Part No.	Description	No. Used
187	492790	Hose-Fuel	1
188	398540	Screw-Tank Mounting (Includes Washer)	1
265	221535	Clamp-Casing	1
267	94204	Screw-Clamp Mtg.	1
284	94511	Screw-Hex. Head	1
346	93705	Screw-Hex. Head	1

Ref. No.	Part No.	Description	No. Used
601	93807	Clamp-Hose	1
670	280512	Spacer-Fuel Tank	1
676	493871	Deflector-Muffler	1
949	281136	Screen-Static	1
957	397974	Cap Assy-Fuel	1
972	494358	Tank Assembly-Fuel	1

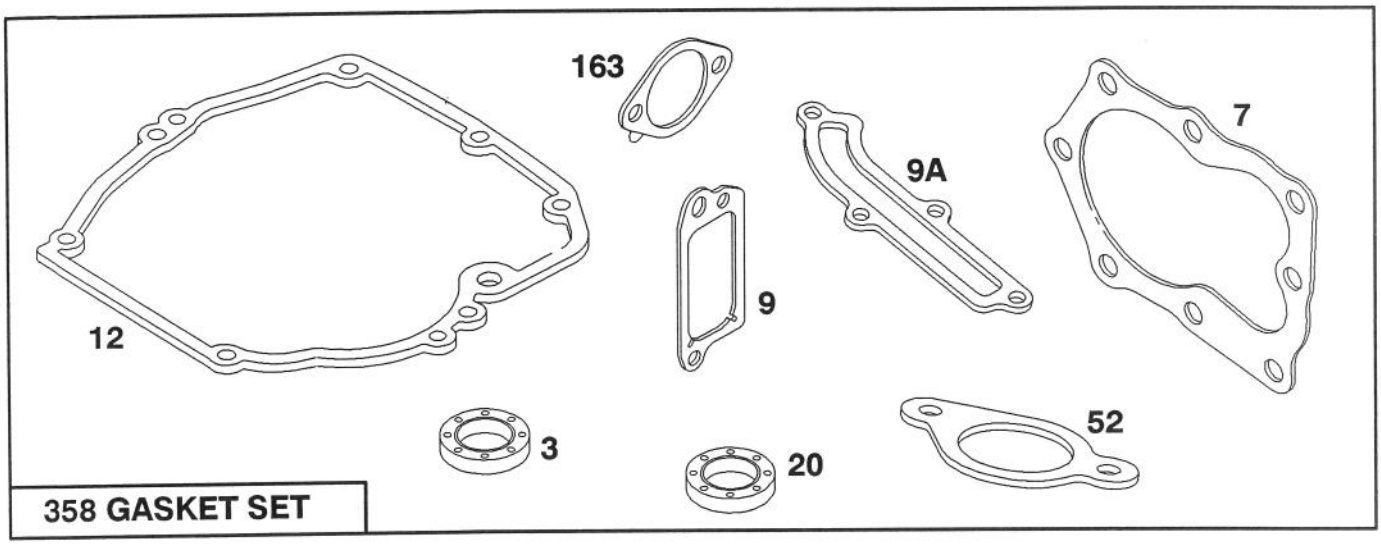

358 GASKET SET

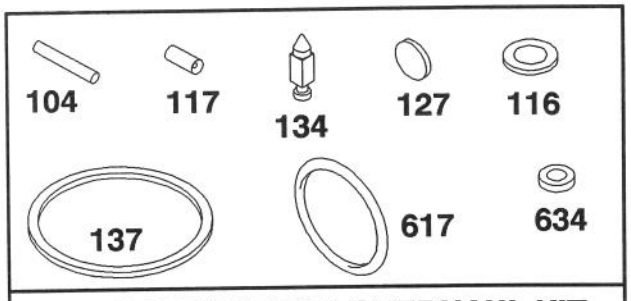

121 CARBURETOR OVERHAUL KIT

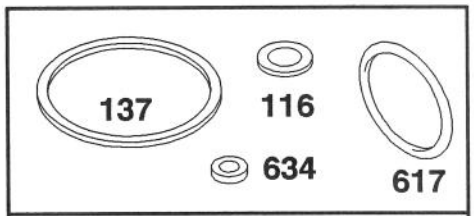

977 CARBURETOR GASKET SET

Assemblies include all parts shown in frames.

ENGINE BRIGGS & STRATTON MODEL 122702-3188-01

Ref. No.	Part No.	Description	No. Used
★3	299819	Seal-Oil	1
★7	272200	Gasket-Cylinder Hd.	1
★9	271904	Gasket-Valve Cover	1
★9A	272238	Gasket-Baffle Plate	1
★12	272198	Gasket-Crankcase	1
★20	399781	Seal-Oil	1
★52	272199	Gasket-Intake Elbow	1
•104	231371	Pin-Float Hinge	1
••◆116		Gasket-Sealing (Sold in Kit Only).	1
•117		Jet (Sold in Kit Only).	1
121	493762	Carburetor Overhaul Kit	1
•134	398188	Valve-Inlet (Includes Seat)	1
••◆137		Gasket-Bowl (Sold in Kit Only).	1
★163	272296	Gasket-Air Cleaner	1
358	493263	Gasket Set	1
••◆617	270344	Seal-Fuel Intake Tube	1
••◆634		Washer-Shaft (Sold in Kit Only)	1
977	490937	Gasket Set-Carburetor	1

• Included in Carburetor Overhaul Kit-Part No. 493762.
◆ Included in Carburetor Gasket Set-Part No. 490937.
★ Included in gasket Set-Part No. 493263.

PRODUCT CHANGES

In an effort to make improvements available to TORO owners as quickly as possible, minor changes are incorporated into Toro's products from time to time that do not become immediately shown in the Parts Catalog. If such a change has been made in your unit, which is not reflected in your manual, see your TORO Distributor or his Authorized TORO Service Dealer for information and part numbers.

IDENTIFICATION AND ORDERING

MODEL AND SERIAL NUMBERS

The Lawnmower has two identification numbers; a model number and a serial number. The two numbers are stamped on a decal which is located on the rear of the housing. In any correspondence concerning the lawnmower, supply model and serial numbers to assure that correct information and replacement parts are obtained.

To order replacement parts from an Authorized TORO Service Dealer, supply the following information:
1. Model and serial number of the lawnmower.
2. Part number, description, and the quantity of part(s) desired.

NOTE: Do not order by reference number if a parts catalog is being used; use the PART NUMBER.

COUNTRIES OTHER THAN THE UNITED STATES OR CANADA

Customers who have purchased TORO products exported from the United States or Canada should contact their Toro Distributor (Dealer) to obtain guarantee policies for your country, province or state. If for any reason you are dissatisfied with your Distributor's service or have difficulty obtaining guarantee information, contact the TORO importer. If all other remedies fail, you may contact us at The Toro Company.

MAINTENANCE RECORD

Date								

Compliance with Radio Interference Regulations Certified.
Certifie Conforme au Reglement sur le Brouillage Radioelectrique.

Litho in U.S.A.

MAINTENANCE RECORD

Date								

MAINTENANCE RECORD

Date								