FORM NO. 3314-501

TORO®

MODEL NO. 51571-1000001 & UP

PARTS CATALOG

YARD BLOWER VACUUM

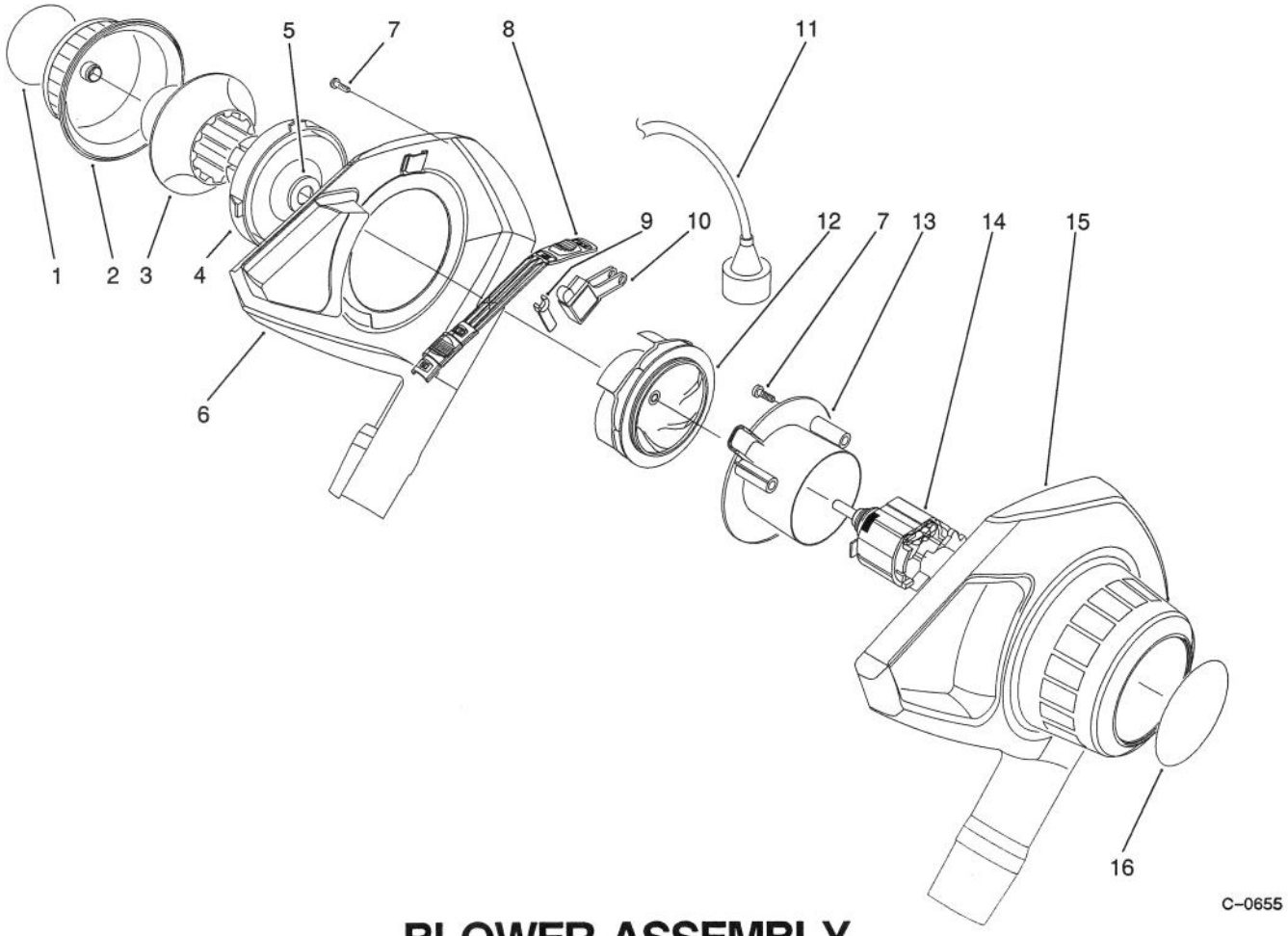

C-0655

BLOWER ASSEMBLY

Ref. No.	Part No.	Description	No. Used
1	73-4250	Decal - Choke	1
2	73-4050	Cover - Choke	1
3	73-4060	Ring - Choke	1
4	73-4070	Base - Choke	1
5	32115-16	Clip - Retainer	1
6	73-4110	Housing Assembly - R.H.	1
7	32104-121	Screw	9
8	73-4080	Bar - Switch	1

Ref. No.	Part No.	Description	No. Used
9	73-4090	Lever - Actuating	1
10	73-4150	Switch	1
11	73-3471	Cord - Power	1
12	73-4020	Impeller Assembly	1
13	73-4140	Plate - Retaining	1
14	73-4180	Motor	1
15	73-4010	Housing - L.H.	1
16	73-4260	Decal - Motor Cover	1

TPS

©The TORO Company - 1990

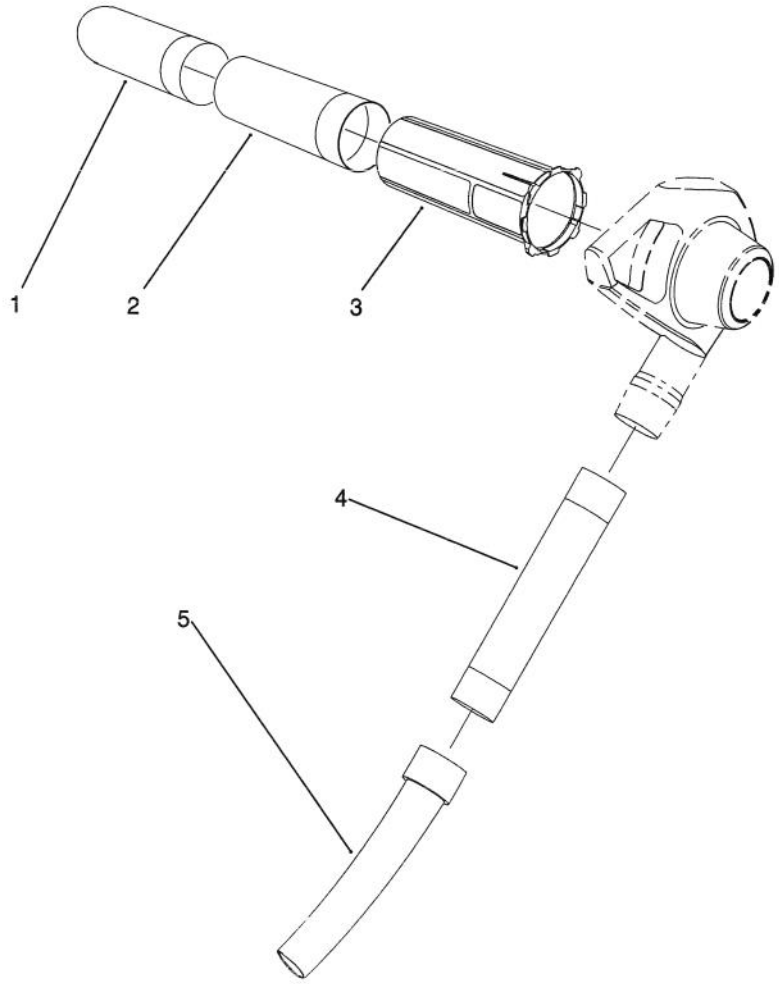

C-0656

TUBE ASSEMBLY

Ref. No.	Part No.	Description	No. Used
1	73-1460	Vac Tube - Lower	1
2	73-1450	Vac Tube - Middle	1
3	73-3990	Vac Tube - Upper	1

Ref. No.	Part No.	Description	No. Used
4	57-3270	Tube - Blower	1
5	73-4160	Nozzle	1

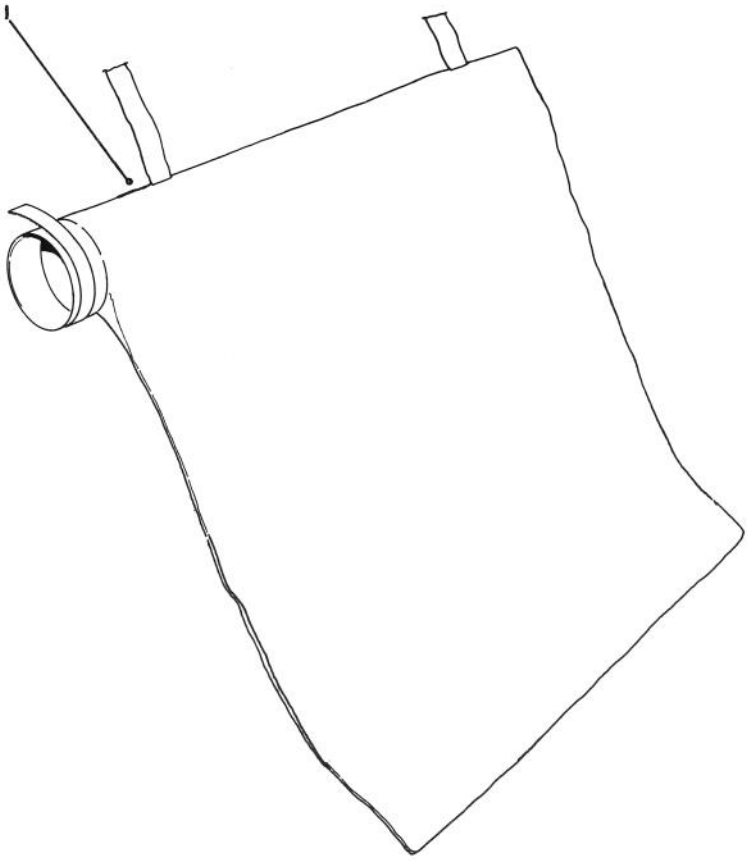

C-0657

BAG ASSEMBLY

Ref. No.	Part No.	Description	No. Used
1	73-1640	Bag - Vacuum	1

Ref. No.	Part No.	Description	No. Used

MAINTENANCE RECORD

Date								