FORM NO. 3314-504

TORO®

MODEL N0. 38025-1000001 & UP

PARTS CATALOG

1800 POWER CURVE SNOWTHROWER

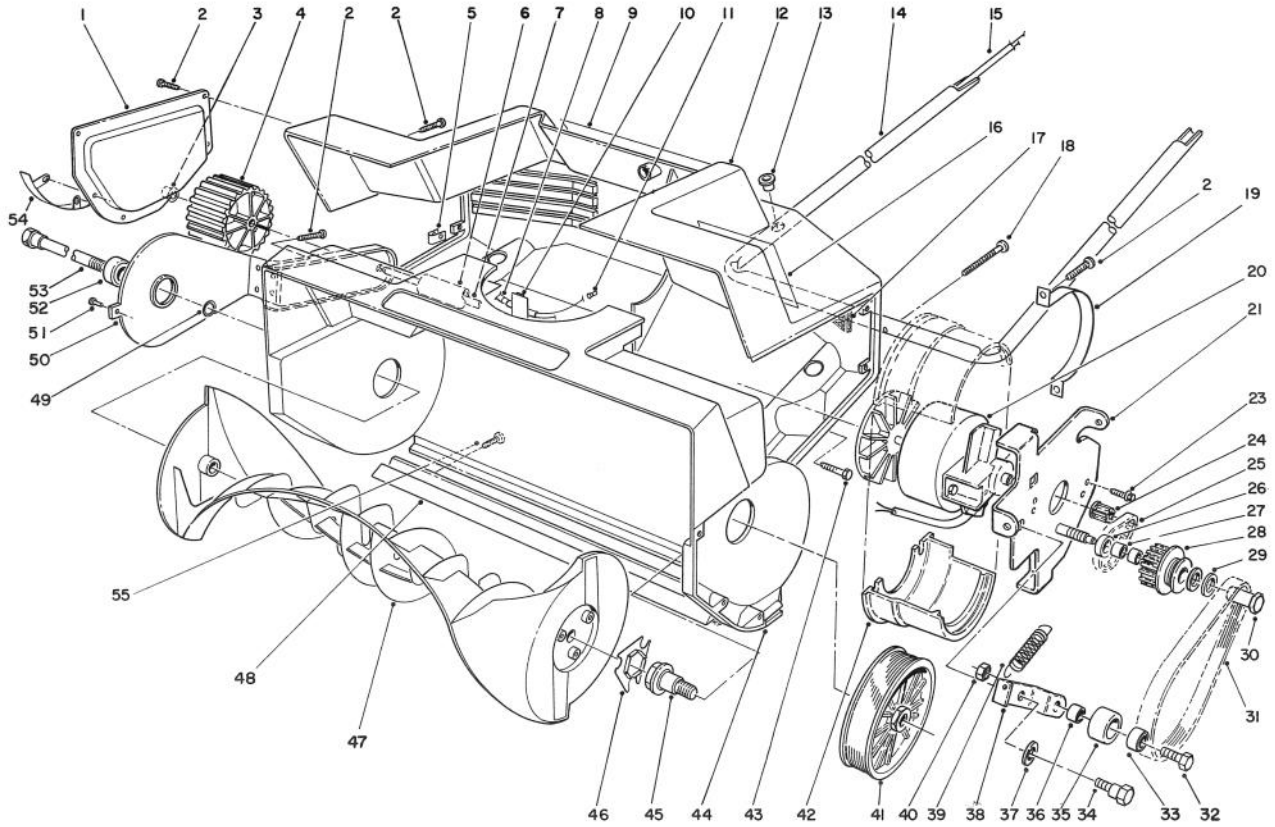

C-0455

HOUSING & ROTOR ASSEMBLY

Ref. No.	Part No.	Description	No. Used
1	73-0220	Plate - Side	2
2	32104-121	Screw - Pan Hd.	23
3	32112-1	Push Nut	2
4	73-0440	Wheel	2
5	249-42	U-Clip - Tinnerman	4
6	73-0250	Sleeve - Axle	1
7	73-0370	Shaft - Axle	1
8	64-5820	Relief - Strain	1
9	73-0451	Decal - Danger Used on Machines Serial Nos. (1000101 Thru 1111100)	1
10	249-44	Clip - Cord Used on Machines Serial Nos. (1000101 Thru 1111100)	1
11	218-511	Connector	2
12	73-0300	Shroud - Housing Used on Machines Serial Nos. (1000101 Thru 1111100)	1
*	73-0301	Shroud - Housing Used on Machines Serial Nos. (1200101 & UP)	1
13	256-307	Bushing	1
14	73-0280	Tube - Lower Handle	1
15	73-3630	Wire Harness Used on Machines Serial Nos. (1100101 Thru 1111100 & 1200101 & UP)	1
*	73-0270	Wire Harness Used on Machines Serial Nos. (1000101 Thru 1011100)	1

* Not Illustrated

TPS

©The TORO Company - 1990

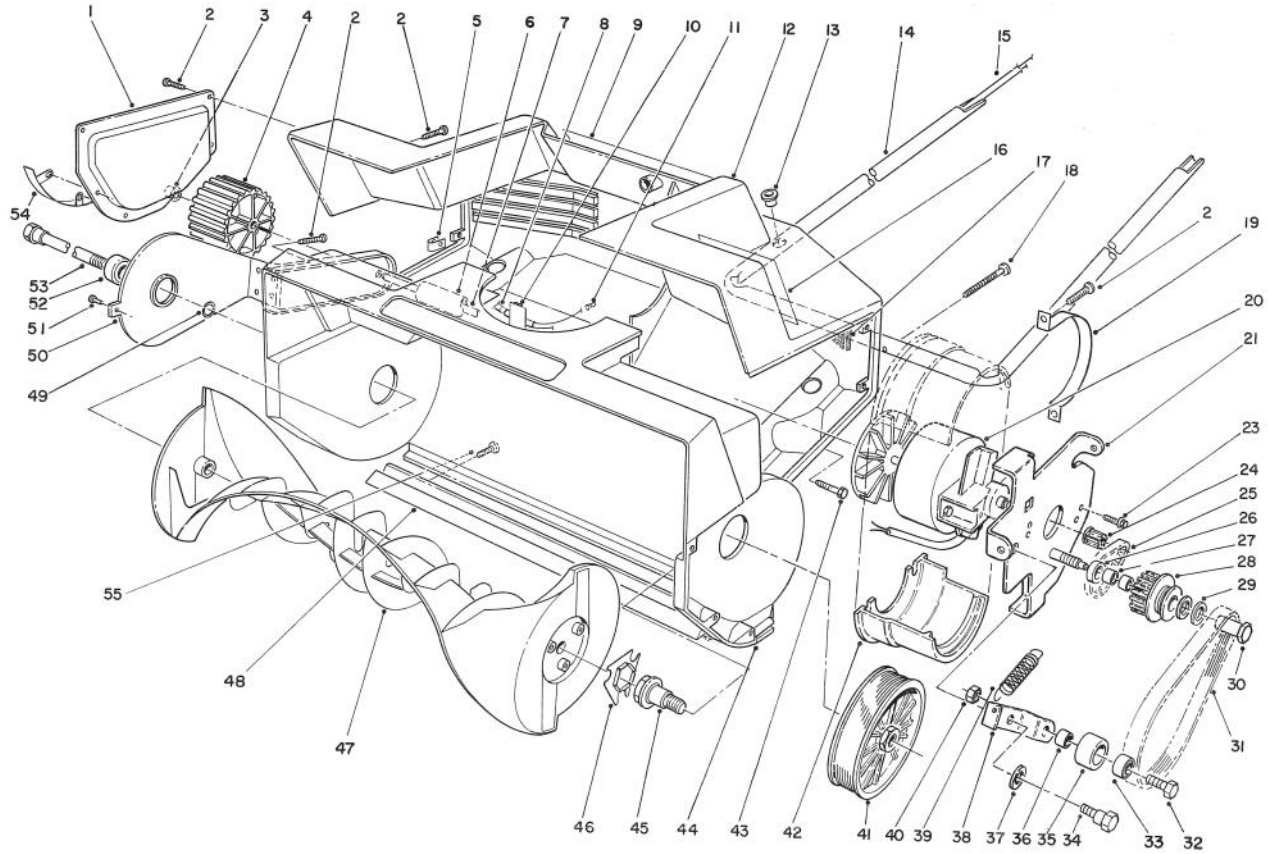

C-0455

HOUSING & ROTOR ASSEMBLY (CONTINUED)

Ref. No.	Part No.	Description	No. Used
16	73-0460	Decal - Warning Used on Machines Serial Nos. (1000101 Thru 1111100)	1
17	73-1800	Filter - Foam	1
18	32144-88	Screw - Pan Hd.	4
19	73-0120	Strap - Motor	1
20	73-0080	Motor Used on Machines Serial Nos. (1000101 Thru 1111100)	1
*	73-3520	Motor Used on Machines Serial Nos. (1200101 & UP)	1
21	73-3700	Motor Plate Assembly	1
23	32144-100	Screw - Hex. Washer Hd.	2
24	73-3661	Pulley - Driver Used on Machines Serial Nos. (1000101 Thru 1111100)	1
*	73-3660	Pulley - Driver Used on Machines Serial Nos. 1200101 & UP)	1
25	73-0160	Belt - Timing	1
26	73-3580	Washer	1
27	252-102	Bearing - Needle	2
28	73-3570	Pulley - Idler (Incl. Ref. #27)	1
29	73-0041	Washer - Thrust	2
30	75-3530	Bolt - Idler	1
31	61-8801	Belt - Drive	1
32	322-45	Screw - Hex. Hd. Cap	1
33	251-307	Bearing - Ball	1
34	27-0411	Screw - Shoulder	1
35	73-3560	Pulley	1
36	73-3540	Spacer	1
37	25-5641	Washer	1
38	73-3600	Bracket - Idler	1
39	73-3680	Spring	1
40	3296-29	Nut - Lock	1
41	73-3550	Pulley - Driven	1
42	73-3650	Clamp - Motor Bracket	2
43	32104-97	Screw - Hex. Hd. Cap	2
44	73-0200	Housing - Rotor Used on Machines Serial Nos. (1000101 Thru 1011100)	1
*	73-3640	Housing - Rotor Used on Machines Serial Nos. (1100101 Thru 1111100 & 1200101 & UP)	1

* Not Illustrated

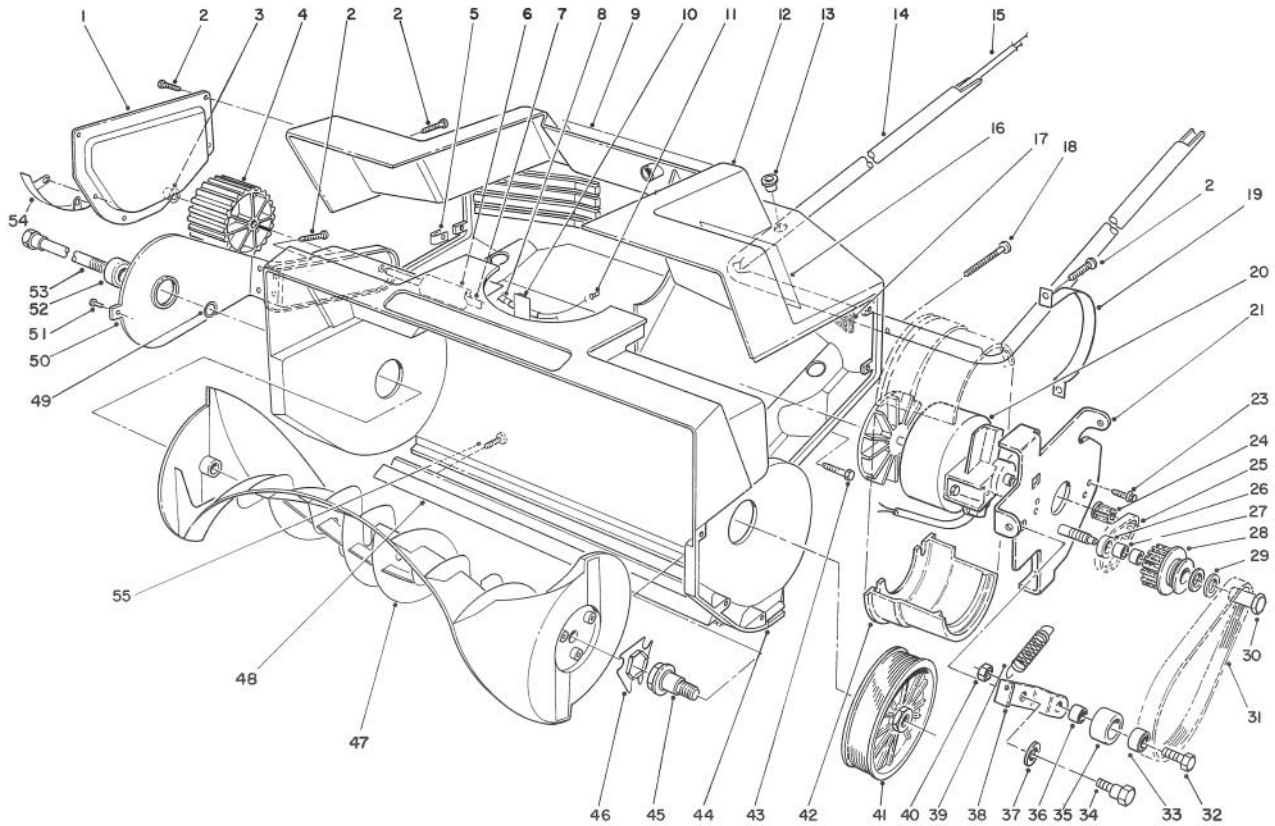

C-0455

HOUSING & ROTOR ASSEMBLY (CONTINUED)

Ref. No.	Part No.	Description	No. Used
45	73-0990	Shaft - Rotor Driver	1
46	73-0860	Coupler - Rotor	1
47	73-0400	Rotor	1
48	73-3690	Scraper Used on Machines Serial Nos. (1100101 Thru 1111100 & 1200101 & UP)	1
*	73-1610	Scraper Used on Machines Serial Nos. (1000101 Thru 1011100)	1
49	73-0040	Washer	1

Ref. No.	Part No.	Description	No. Used
50	73-0010	Bracket - Wheel (Incl. Ref.#52)	2
51	3290-271	Rivet - Pop	2
52	61-8780	Bearing - Ball	2
53	73-0020	Shaft - Rotor	1
54	73-1570	Skid - Housing	2
55	32144-108	Screw - Pan Hd. Used on Machines Serial Nos. (1100101 Thru 1111100 & 1200101 & UP)	2

* Not Illustrated

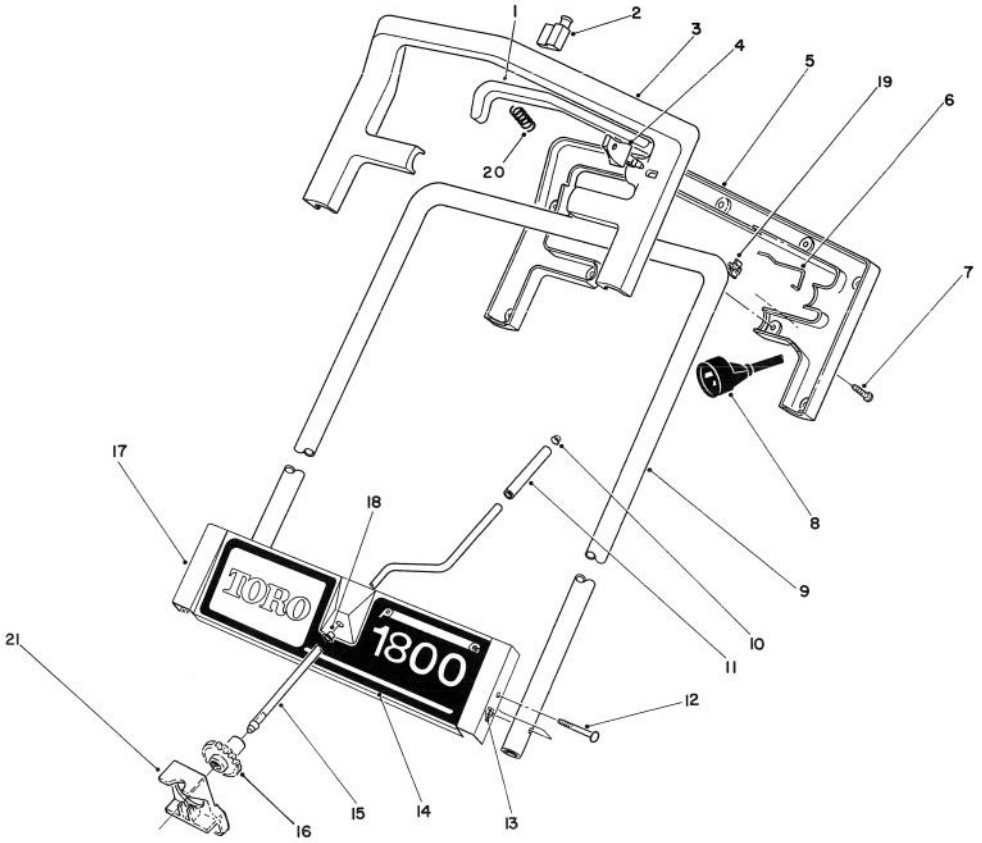

C-0456

HANDLE ASSEMBLY

Ref. No.	Part No.	Description	No. Used
1	73-3510	Bar - Switch Used on Machines Serial Nos. (1100101 Thru 1111100 & 1200101 & UP)	1
*	73-0340	Bar - Switch Used on Machines Serial Nos. (1000101 Thru 1011100)	1
2	64-4930	Switch	1
3	73-3610	Handle - Upper Control Used on Machines Serial Nos. (1100101 Thru 1111100 1200101 & UP)	1
*	73-0320	Handle - Upper Control Used on Machines Serial Nos. (1000101 Thru 1011100)	1
4	73-0360	Key	1
5	73-3620	Handle - Lower Control, Used on Machines Serial Nos. (1100101 THRU 1111100 & 1200101 & UP)	1
*	73-0330	Handle - Lower Control, Used on Machines Serial Nos. (1000101 Thru 1011100)	1
6	73-0350	Spring - Lock Used on Machines Serial Nos. (1000101 Thru 1011100)	1
*	73-3480	Spring - Lock Used on Machines Serial Nos. (1100101 Thru 1111100 & 1200101 & UP)	1
7	32104-121	Screw - Pan Hd. Form.	11
8	73-3470	Cord - Supply Used on Machines Serial Nos. (1100101 Thru 1111100 & 1200101 & UP)	1
*	73-0420	Cord - Supply Used on Machines Serial Nos. (1000101 Thru 1011100)	1
9	73-3460	Tube - Upper Handle Used on Machines Serial Nos. (1100101 Thru 1111100 & 1200101 & UP)	1
*	73-0290	Tube - Upper Handle Used on Machines Serial Nos. (1000101 Thru 1011100)	1
10	32112-1	Push Nut	1
11	73-0251	Sleeve - Chute Crank	1
12	33-8951	Screw - Hex. Hd. Mach.	2
13	3296-12	Nut - Lock	2
14	73-0490	Decal - Escutcheon	1
15	73-0240	Rod - Chute Crank	1
16	73-0230	Gear - Chute Crank	1
17	73-0310	Plate - Escutcheon	1
18	256-306	Bushing - Snap In	1
19	73-3490	Lock - Slider Used on Machines Serial Nos. (1100101 Thru 1111100 & 1200101 & UP)	1
20	73-3450	Spring Used on Machines Serial Nos. (1100101 Thru 1111100 & 1200101 & UP)	2
21	73-3710	Brake - Gear	1

* Not Illustrated

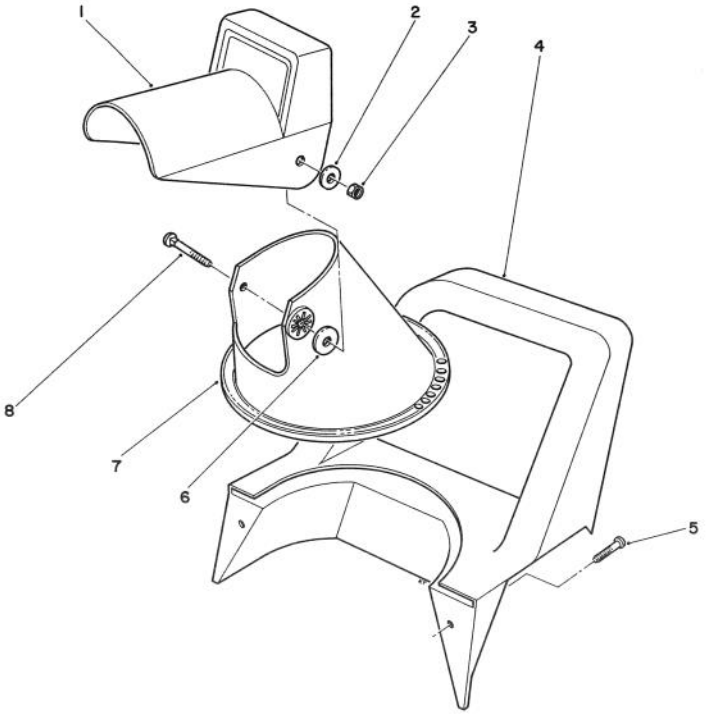

C-0457

CHUTE ASSEMBLY

Ref. No.	Part No.	Description	No. Used
1	73-0190	Chute - Deflector	1
2	3256-68	Washer - Flat	2
3	3296-29	Nut - Lock	2
4	73-0260	Handle - Middle	1
5	32104-121	Screw - Pan Hd. Form.	4
6	20-4320	Washer - Rubber	2

Ref. No.	Part No.	Description	No. Used
7	73-0180	Chute - Lower	1
8	3230-22	Bolt - Carriage	2
*	73-0520	Loose Parts (Incl. Ref. # 2,3-8 Page 4 &12,13 Page 3)	1

* Not Illustrated

PRODUCT CHANGES

In an effort to make improvements available to TORO owners as quickly as possible, minor changes are incorporated into Toro's products from time to time that do not become immediately shown in the Parts Catalog. If such a change has been made in your unit, which is not reflected in your manual, see your TORO Distributor or his Authorized TORO Service Dealer for information and part numbers.

COUNTRIES OTHER THAN THE UNITED STATES OR CANADA

Customers who have purchased TORO products exported from the United States or Canada should contact their Toro Distributor (Dealer) to obtain guarantee policies for your country, province or state. If for any reason you are dissatisfied with your Distributor's service or have difficulty obtaining guarantee information, contact the TORO importer. If all other remedies fail, you may contact us at The Toro Company.

MAINTENANCE RECORD

Date								

Compliance with Radio Interference Regulations Certified.
Certifie Conforme au Reglement sur le Brouillage Radioelectrique.

Litho in U.S.A.

MAINTENANCE RECORD

Date								

MAINTENANCE RECORD

Date								