FORM NO. 3314-505

TORO®

MODEL NO. 26562-1000001 & UP

PARTS CATALOG

21" H.P. REAR BAGGER

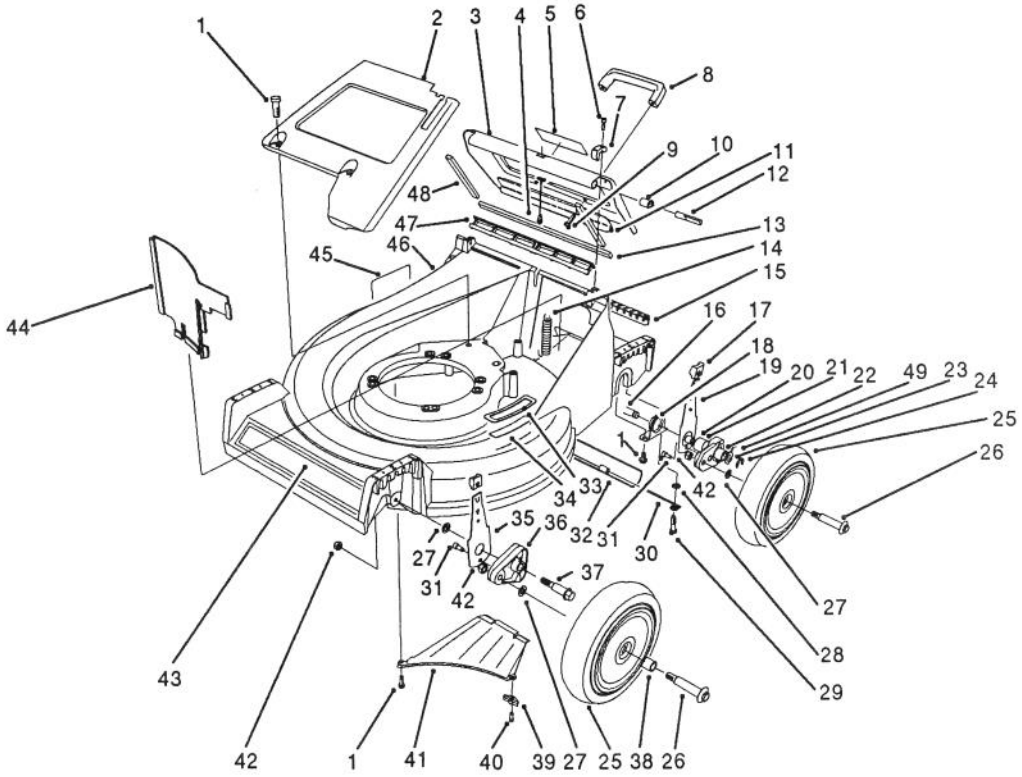

C-0554

HOUSING ASSEMBLY

Ref. No.	Part No.	Description	No. Used
1	32144-70	Screw - Hex Hd. Thr'd Forming	5
2	65-5660	Panel - Screen	1
3	13-2189	Door - Discharge (Incl. Ref. #5, 11, 13, & 48)	1
4	65-5370	Cable - Door	1
5	63-9050	Decal - Warning	1
6	65-5210	Screw - Thr'd Forming	2
7	65-5140	Clamp - Hinge	2
8	65-5100	Handle - Door	1
9	46-8091	Screw - Hex Washer Hd.	2
10	65-5460	Bushing - Door	2
11	66-0610	Brace - Door	1
12	65-5290	Pin - Hinge	2
13	65-5490	Seal - Door End	1
14	65-5360	Spring - Extension	1
15	65-5150	Cover - Access	1
16	66-0530	Shaft - Output	1

Ref. No.	Part No.	Description	No. Used
17	25-7740	Knob - Arm	4
18	66-0360	Cap - End	2
19	65-5440	Spring Arm Ass'y - Rear	2
20	70-9760	Bushing	2
21	65-5043	Pivot Arm Ass'y (Incl. Ref. #20, 22 & 49)	2
22	47-2890	Bushing	2
23	65-4730	Washer - Thrust	2
24	32151-68	Ring - Retaining	2
25	11-9509	Wheel & Tire Ass'y (Incl. Ref. #38)	4
26	27-6231	Screw - Shoulder	4
27	40-1940	Washer	6
28	3256-23	Washer - Flat	2
29	5-2490	Screw - Shoulder	2
30	76-1980	Hanger - Shield	2
31	65-5220	Screw - Thr'd Forming	4
32	66-0520	Shield - Trailing	1
33	66-0110	Pad - Step	1

©The TORO Company - 1990

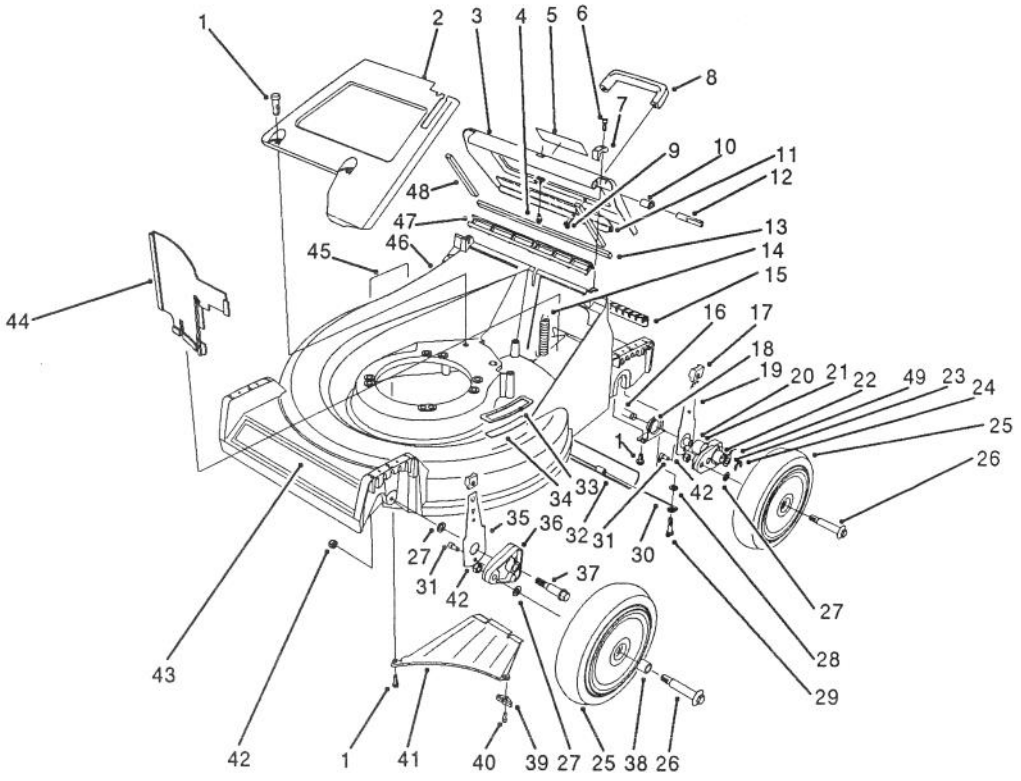

C-0554

HOUSING ASSEMBLY (CONTINUED)

Ref. No.	Part No.	Description	No. Used
34	46-7370	Decal - Step Pad	1
35	66-0540	Spring Arm Ass'y - Front	2
36	66-0580	Arm - Pivot Front	2
37	66-0560	Screw - Shoulder	2
38	27-6250	Bushing	8
39	66-0640	Bracket - Discharge Ramp	1
40	65-5221	Screw - Thr'd Forming	1
41	65-5010	Ramp - Discharge	1
42	3296-6	Nut - Lock	6

Ref. No.	Part No.	Description	No. Used
43	66-0470	Decal - Deck	1
44	66-0020	Panel - Vertical	1
45	43-8480	Decal - Danger	1
46	13-4689	Housing Assembly (Incl. Ref. # 29, 33, 34, & 45)	1
47	65-5160	Seal - Door	1
48	65-5480	Seal - Door Side	2
49	302-56	Fitting - Grease	2

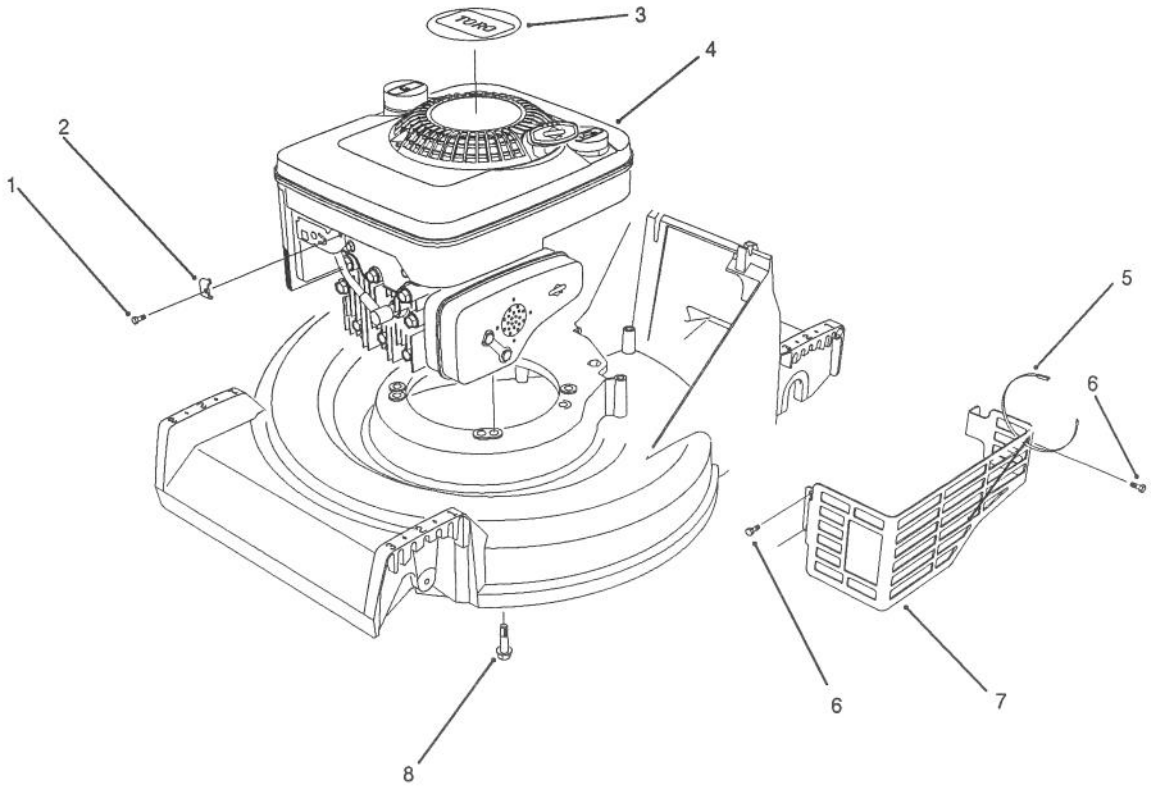

C-0555

ENGINE ASSEMBLY

Ref. No.	Part No.	Description	No. Used
1	2210-313	Screw - Clamp	1
2	2210-249	Clamp - Casing	1
3	75-9400	Decal - Recoil	1
4		Engine - Quantum	1
5	3290-378	Cable Tie	1

Ref. No.	Part No.	Description	No. Used
6	32144-73	Screw - Thread Forming	3
7	82-8550	Guard - Muffler	1
8	32144-102	Screw - Hex Hd. Thr'd Forming	3

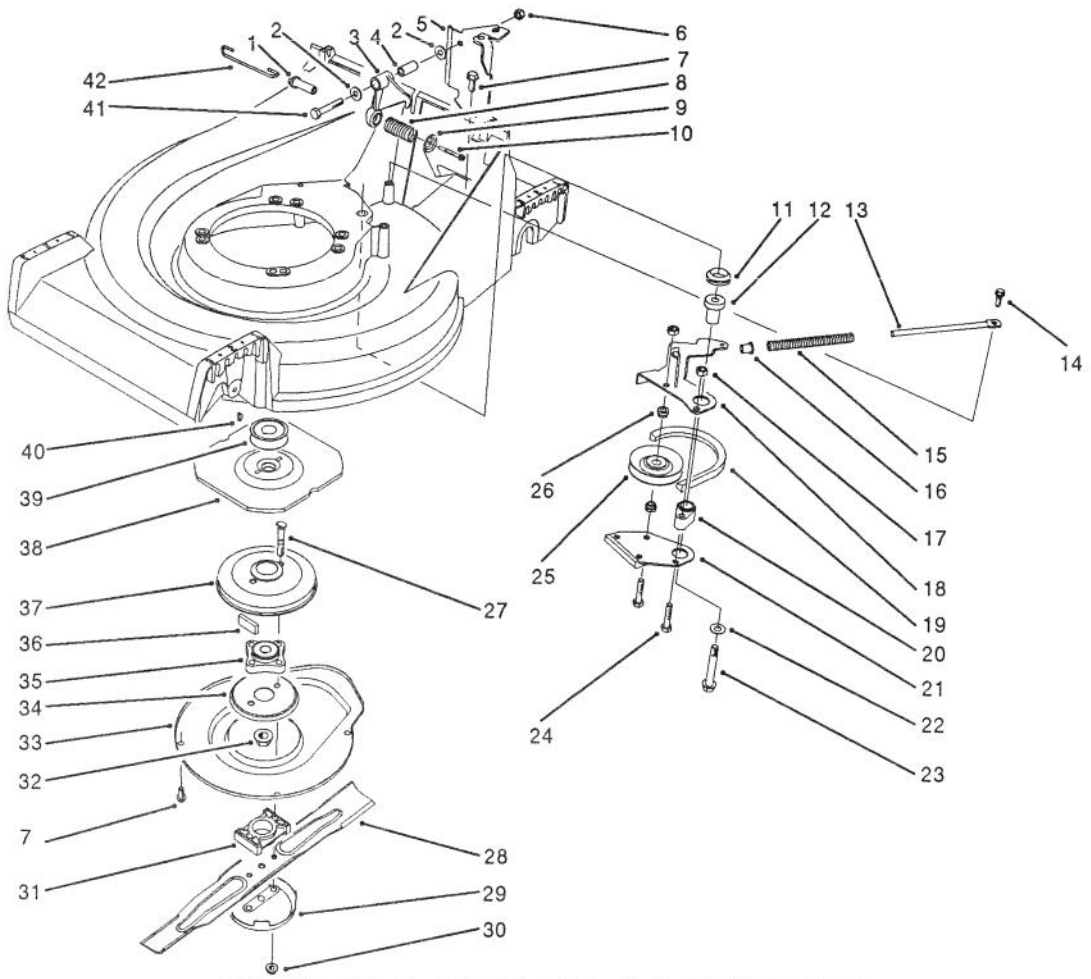

C-0556

BLADE & BRAKE ASSEMBLY

Ref. No.	Part No.	Description	No. Used
1	71-3660	Pin - Spring	1
2	3256-23	Washer - Flat	2
3	65-5700	Crank	1
4	65-5690	Bushing - Straight	1
5	66-0030	Bracket - Cable Support	1
6	32128-44	Nut - Hex Flange Lock	1
7	32144-70	Screw - Hex Hd. Thr'd Forming	5
8	71-3630	Spring - Compression	1
9	65-5280	Retainer - Spring	1
10	46-7040	Screw - Hex Washer Hd. Special	1
11	253-151	V-Ring - Seal	1
12	65-5720	Bushing - Flange	1
13	65-5320	Rod - Brake Spring	1
14	65-5670	Screw - Shoulder	1
15	71-3640	Spring - Compression	1
16	66-0350	Bushing - Flange	1
17	3296-42	Nut - Lock	2
18	66-0090	Lever - Brake	1
19	65-5740	V-Belt	1
20	65-5070	Hub - Brake Plate	1

Ref. No.	Part No.	Description	No. Used
21	65-5780	Shoe - Brake	1
22	65-5380	Washer	1
23	11-0580	Screw - Thr'd Forming	1
24	321-13	Capscrew - Hex Hd.	2
25	46-5650	Pulley - Idler	1
26	65-5130	Hub - Idler Pulley	2
27	42-3190	Screw - Special	2
28	62-7700	Blade - 21"	1
29	80-2770	Cup - Anti Scalp	1
30	54-9190	Nut -Flange Lock	2
31	62-4280	Spacer - Blade	1
32	3296-33	Nut - Lock	1
33	65-5200	Shield - BBC	1
34	65-5330	Screen - BBC	1
35	42-6890	Hub Assembly	1
36	52-3480	Dampener - Vibration	2
37	62-3890	Drum - Brake	1
38	65-5300	Flywheel	1
39	62-7560	Pulley - S.P.	1
40	3257-17	Key - Hypro	1
41	322-21	Capscrew - Hex Hd.	1
42	71-3650	Link - Control	1

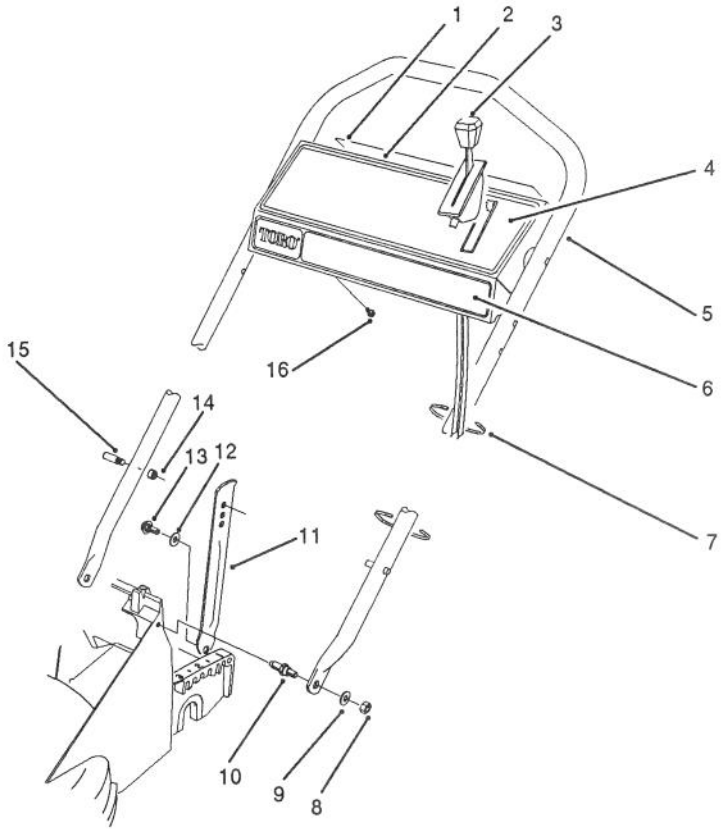

C-0557

HANDLE ASSEMBLY

Ref. No.	Part No.	Description	No. Used
1	63-9060	Decal - Danger	1
2	13-9809	Panel - Control (Incl. Ref. #1)	1
3	66-0236	Control - Throttle	1
4	76-0750	Decal - Instruction	1
5	66-0320	Handle	1
6	66-1770	Decal - Toro	1
7	3290-378	Cable Tie	2
8	3296-29	Nut - Lock	2
9	3256-23	Washer - Flat	2
10	66-0450	Screw - Shoulder Stud	2
11	65-5730	Latch - Handle	2
12	256-313	Washer - Nylon	2
13	5-2490	Screw - Shoulder	2
†14	49-2750	Pin - Handle	2
†15	3296-47	Nut - Lock	2
16	32104-76	Screw - Acorn Slot	4

†Service Replacement Parts

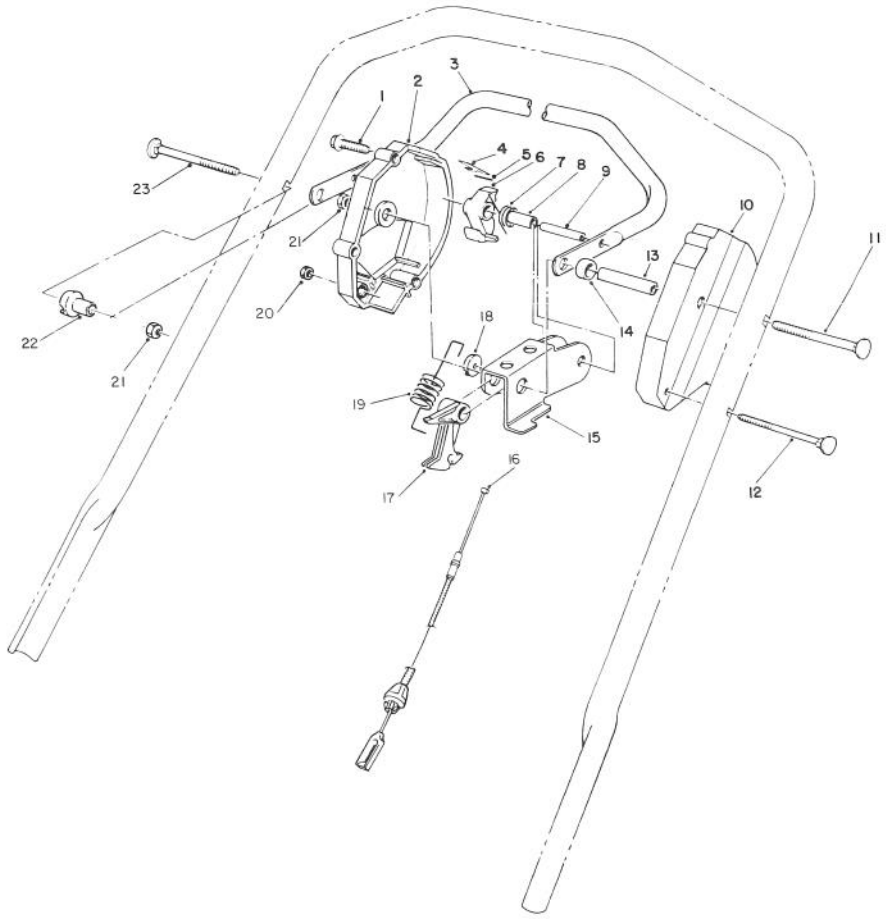

C-0558

CONTROL ASSEMBLY

Ref. No.	Part No.	Description	No. Used
1	46-7040	Screw - Hex Washer Hd.	3
2	66-0160	Housing - Control R.H.	1
3	52-7430	Bar - Control	1
4	52-7410	Spring - Leaf	1
5	57-6290	Pin - Insert	1
6	46-5530	Hook - Control	1
7	46-5510	Spring - Torsion	1
8	46-5550	Bushing - Straight	1
9	32121-9	Pin - Roll	1
10	46-5460	Housing - Control L.H.	1
11	17-9425	Screw - Handle	1
12	46-6431	Screw - Handle Special	1

Ref. No.	Part No.	Description	No. Used
13	46-5590	Spacer - Tube	1
14	256-276	Washer - Nylon	1
15	66-0180	Rocker	1
16	77-0190	Cable - BBC	1
17	46-5540	Lever - Cable	1
18	66-0170	Washer - Nylon	1
19	66-0190	Spring - Detent	1
20	3296-8	Nut - Lock	1
21	3296-58	Nut - Lock	2
22	66-0330	Support - Spacer	1
23	17-9426	Screw - Handle	1

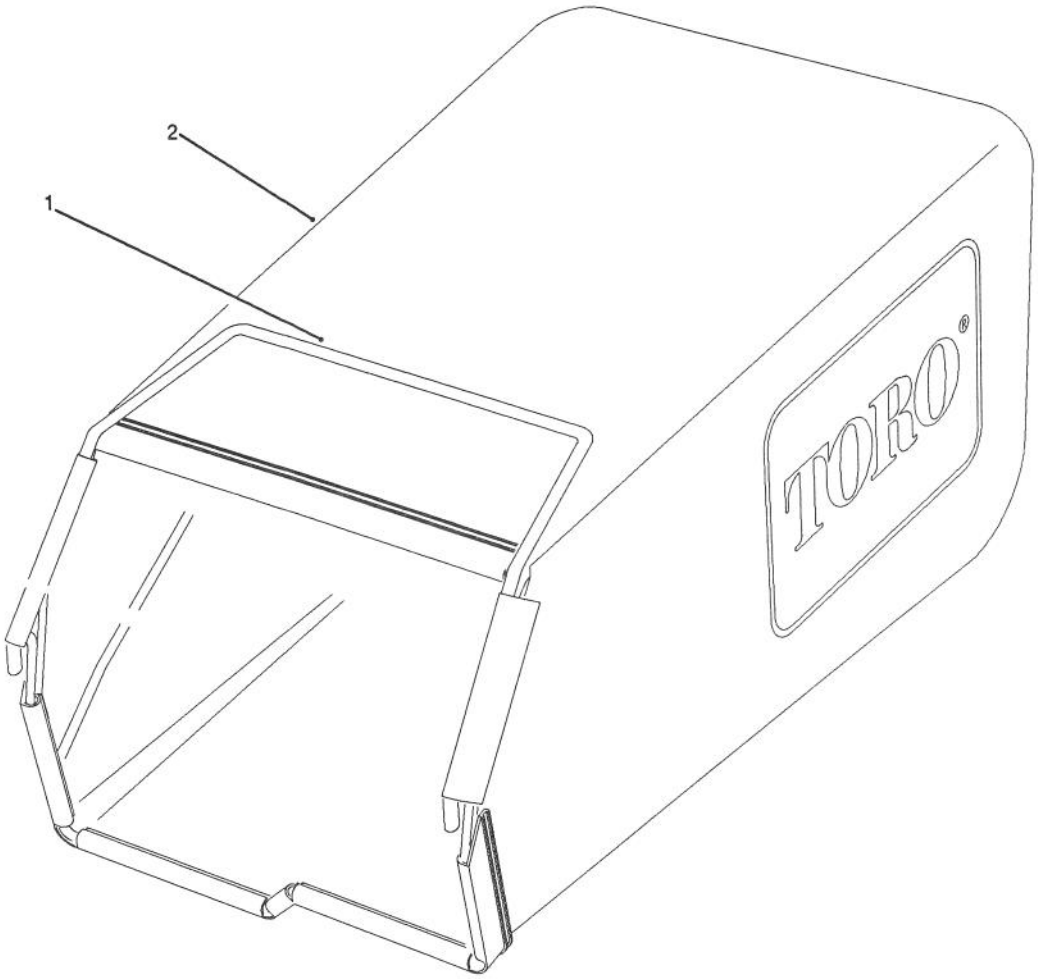

C-0664

GRASS BAG ASSEMBLY

Ref. No.	Part No.	Description	No. Used
1	76-1790	Frame - Bag	1
2	66-0010	Bag - Grass	1

Ref. No.	Part No.	Description	No. Used

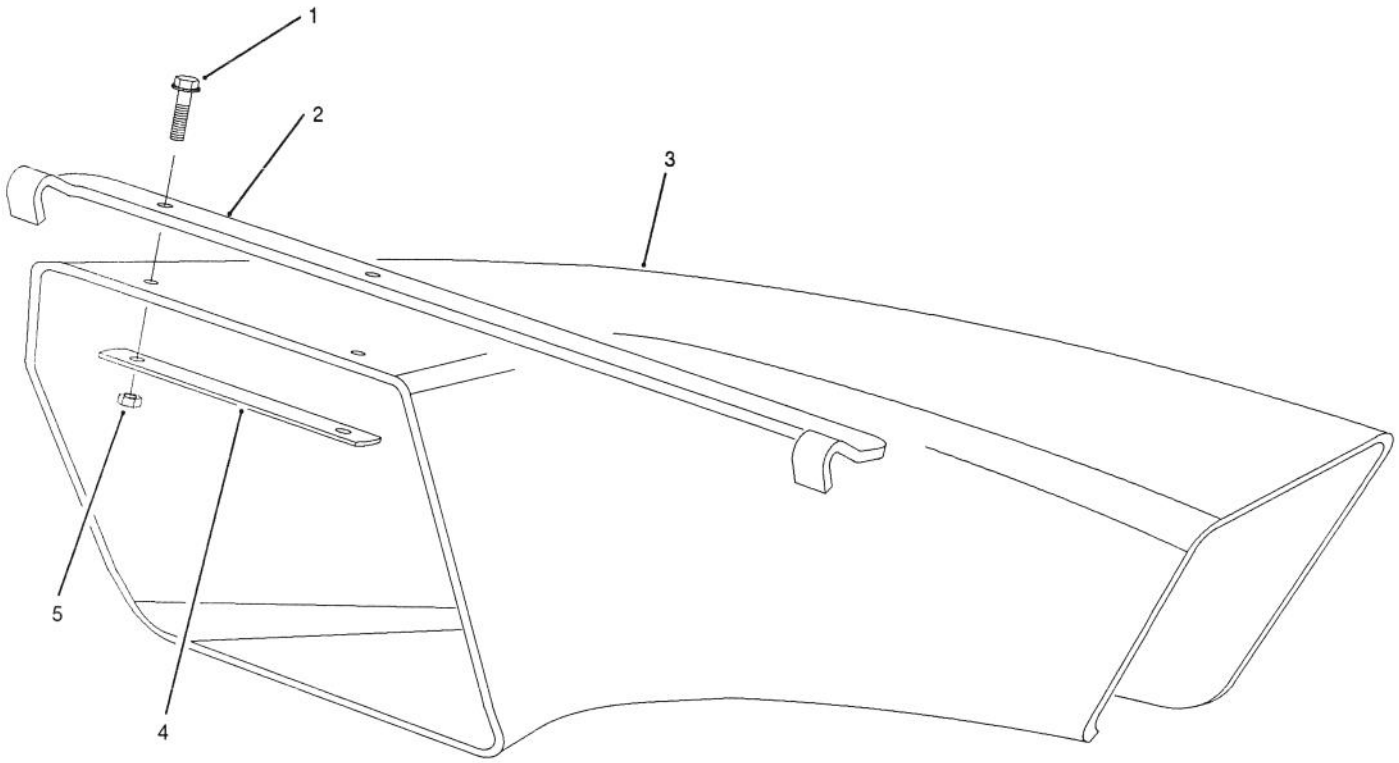

C-0169

SIDE DISCHARGE CHUTE MODEL NO. 59112 (Optional)

Ref. No.	Part No.	Description	No. Used
1	3290-126	Screw - Hex. Washer Hd.	2
2	66-0070	Bracket - Chute Hanger	1
3	65-5240	Chute - Discharge	1

Ref. No.	Part No.	Description	No. Used
4	3296-12	Nut - Lock	2
5	66-0060	Plate - Stress	1

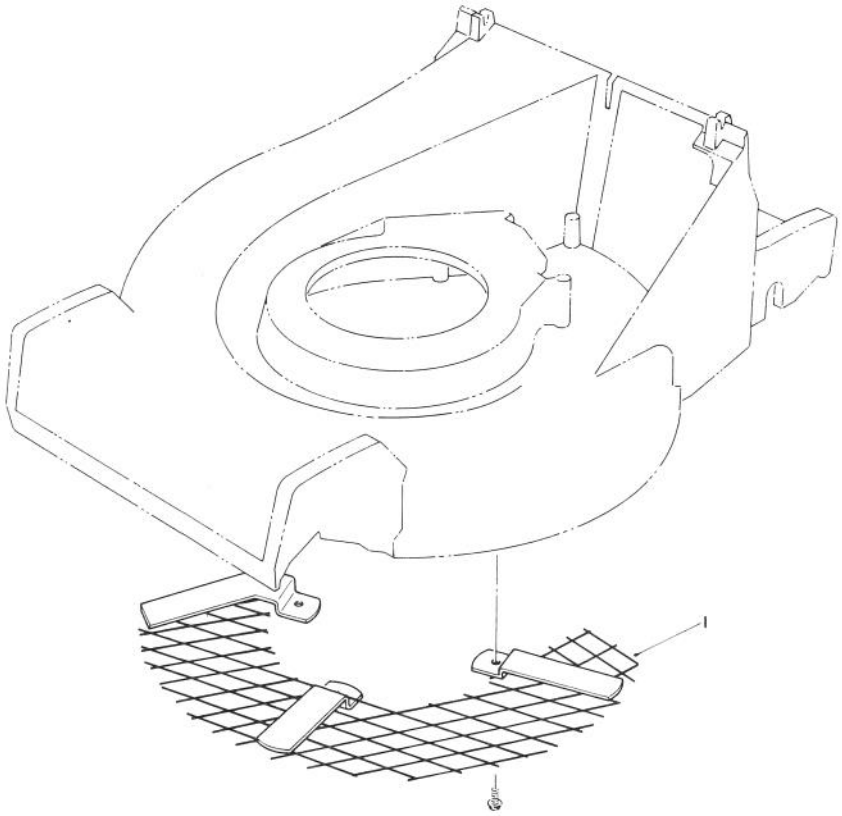

C-0542

LEAF SHREDDER Model No. 59180

Ref. No.	Part No.	Description	No. Used
1	77-0390	Shredder - Leaf	1

Ref. No.	Part No.	Description	No. Used

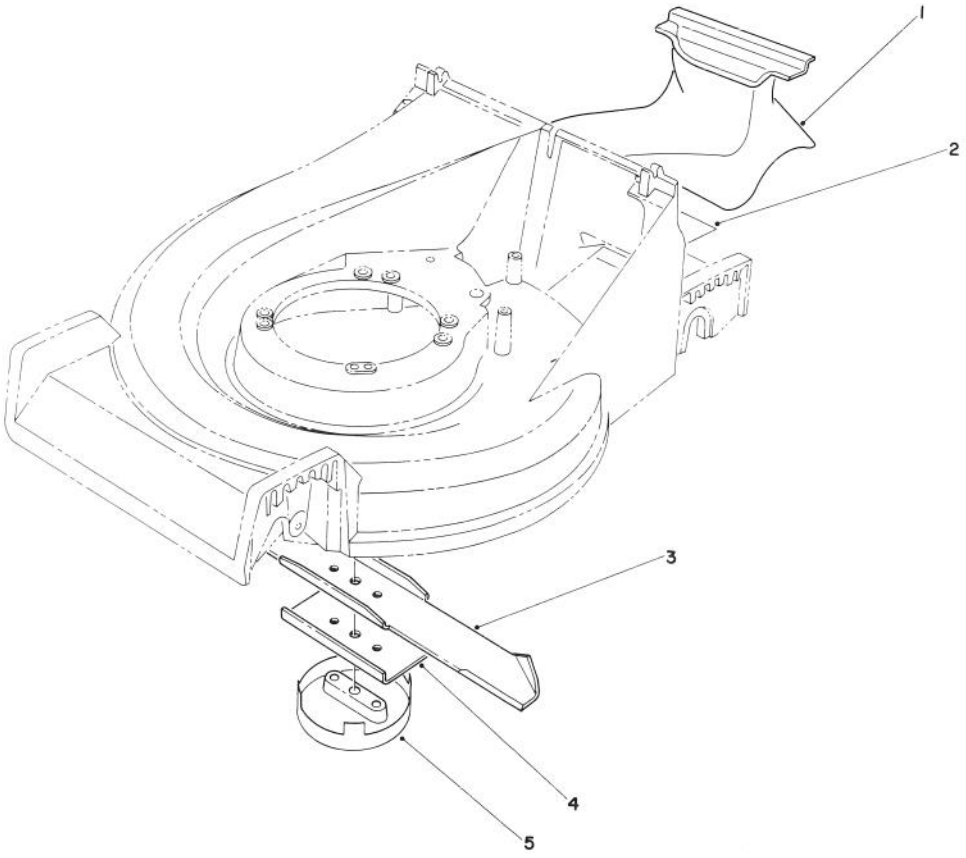

C-0658

MULCHER KIT MODEL NO. 59172 (OPTIONAL)

Ref. No.	Part No.	Description	No. Used
1	71-9090	Plug - Mulching	1
2	71-9210	Decal - Mulcher	1
3	42-1000	Blade	1
4	80-0510	Stiffener - Blade	1
5	80-2770	Cup - Anti-Scalp	1

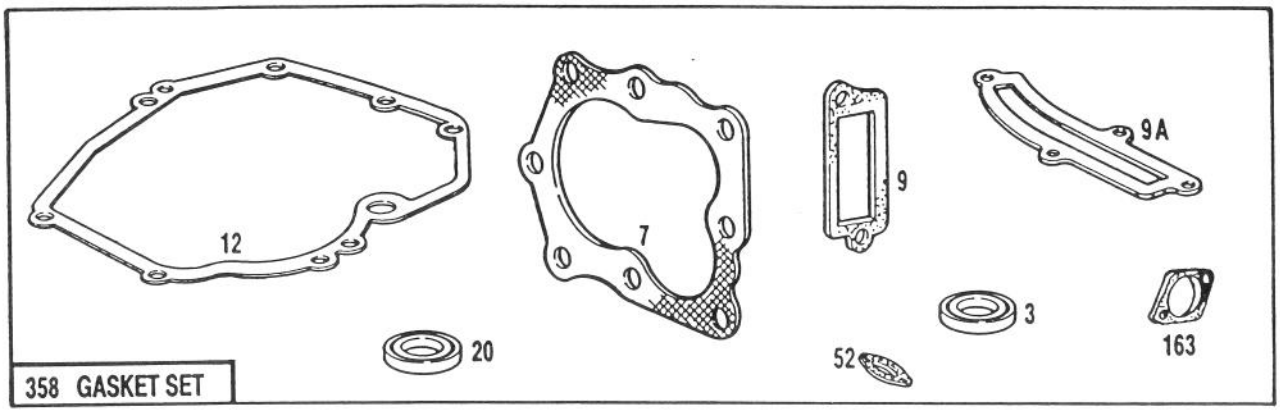

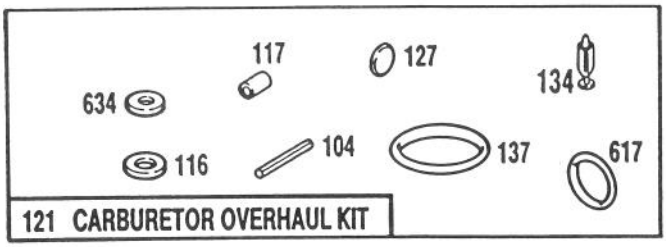

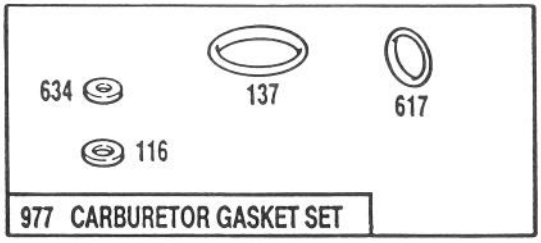

Assemblies include all parts shown in frames.

ENGINE BRIGGS & STRATTION MODEL 124702-0136-01

Ref. No.	Part No.	Description	No. Used
3	393862	Seal - Oil	1
7	272200	Gasket - Cylinder Hd.	1
9	271904	Gasket - Valve Cover	1
9A	272238	Gasket - Baffle Plate	1
12	272198	Gasket - Crankcase	1
20	399781	Seal - Oil	1
52	272199	Gasket - Intake Elbow	1
104	231371	Pin - Float Hinge	1
116		Gasket - Sealing	1
117		Jet	1

Ref. No.	Part No.	Description	No. Used
121	493762	Carburetor Overhaul Kit	1
127		Plug - Welch	1
134	398188	Valve - Inlet	1
137		Gasket - Bowl	1
163	272296	Gasket - Air Cleaner	1
358	493263	Gasket Set	1
617	270344	Seal - Fuel Intake Tube	1
634		Washer - Throttle Shaft	1
977	490937	Gasket Set - Carburetor	1

ENGINE BRIGGS & STRATTON MODEL 124702-0136-01

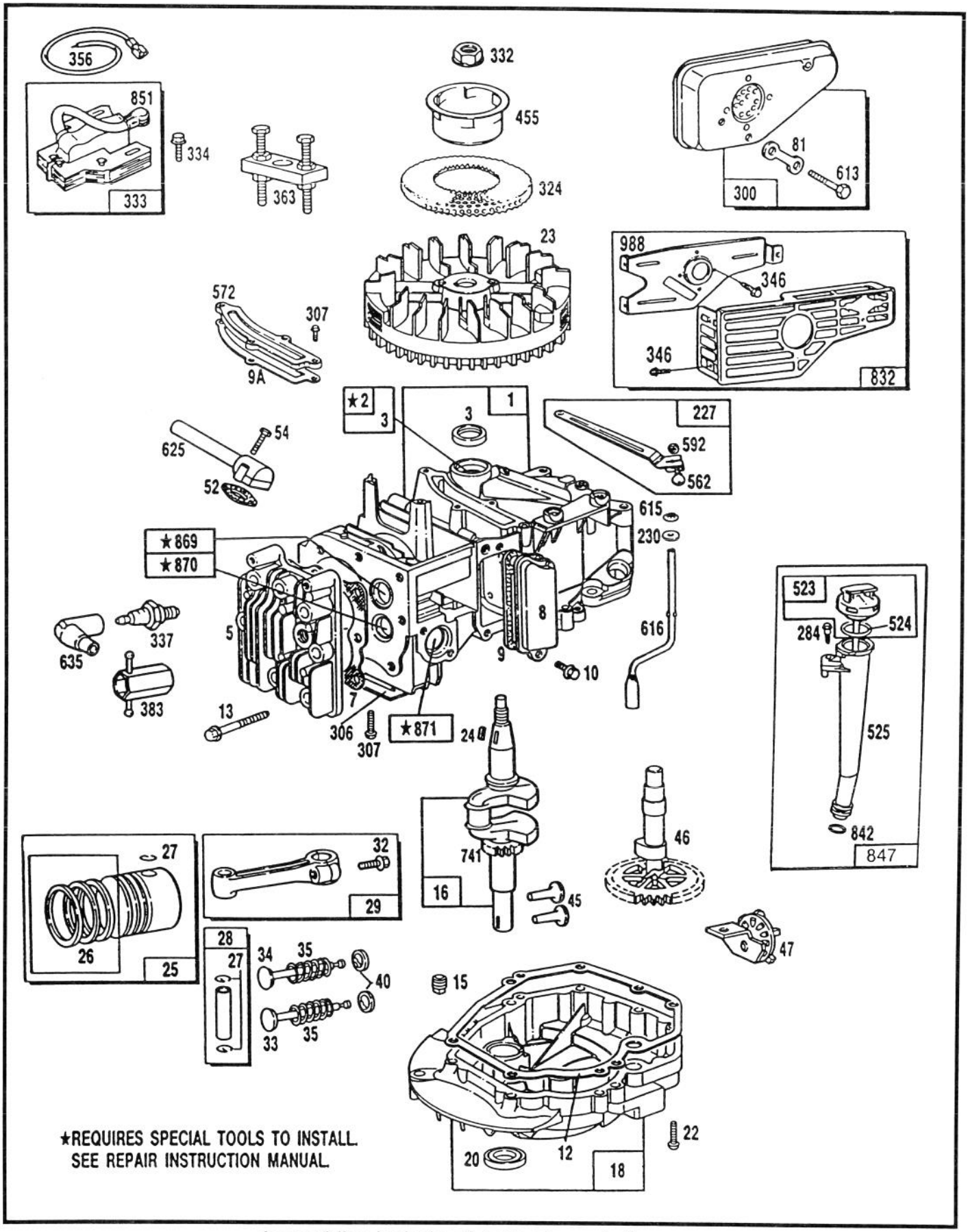

Assemblies include all parts shown in frames.

ENGINE BRIGGS & STRATTON MODEL NO. 124702-0136-01

Ref. No.	Part No.	Description	No. Used
1	493260	Cylinder Assembly	1
2	293708	Bushing – Cylinder Note: Requires special tools for installation.	1
3	**393862	Seal – Oil	1
5	213610	Head – Cylinder	1
7	**272200	Gasket – Head Cylinder	1
8	399717	Breather – Valve Chamber	1
9	**271904	Gasket – Valve Cover	1
9A	**272238	Gasket – Baffle Plate	1
10	94222	Screw – Breather Mounting Sem	1
12	**272198	Gasket – Crankcase	1
13	94547	Screw – Cylinder Hd.	1
15	94239	Plug – Oil Drain	1
16	493428	Crankshaft Note: Order 94388 for Timing Gear Key.	1
18	493279	Sump – Engine	1
20	**399781	Seal – Oil	1
22	94220	Screw – Sump Mtg. Sem	1
23	492177	Flywheel – Magneto	1
24	222698	Key – Flywheel	1
25	493262	Piston Ass'y – Standard	1
	493385	Piston Ass'y – .010" O.S.	1
	493386	Piston Ass'y – .020" O.S.	1
	493387	Piston Ass'y – .030" O.S. Ring Sets: Note: For Chrome Piston Ring Set – Standard Size Order Part No. 493391	1
26	493261	Ring Set – Std. Piston	1
	493388	Ring Set – .010" O.S. Piston	1
	493389	Ring Set – .020" O.S. Piston	1
	493390	Ring Set – .030" O.S. Piston	1
27	26026	Lock – Piston Pin	1
28	298909	Pin Ass'y – Piston – Std.	1
	298908	Pin Ass'y – Piston – .005" O.S.	1
29	490566	Rod Ass'y – Connecting Note: For Connecting Rod with .020" undersize Crankpin Bearing – Order No. 490743.	1
32	94405	Screw Connecting Rod	1
33	262651	Valve – Exhaust	1
34	262652	Valve – Intake	1
35	262224	Spring – Valve	1
40	93312	Retainer – Valve Spring Used with valves with groove in stem.	1

Ref. No.	Part No.	Description	No. Used
45	262204	Tappet – Valve	1
46	492830	Gear – Cam	1
47	492524	Oil Slinger Gear & Bracket	1
52	**272199	Gasket – Intake Elbow	1
54	94526	Screw – Intake Elbow Mtg.	1
81	233664	Lock – Muffler Screw	1
227	492349	Lever Ass'y – Governor	1
230	67072	Washer – Governor Crank	1
284	94511	Screw – Hex Hd.	1
300	490547	Muffler – Exhaust	1
306	224324	Shield – Cylinder	1
307	94515	Screw – Hex Hd.	1
324	224251	Screen – Rotating	1
332	92284	Nut – Flywheel	1
333	802574	Armature – Magneto	1
334	93381	Screw – Armature Mtg. Sem	1
337	293918	Plug – Spark (With Gasket) (1-1/2" High – 37-42mm) (Resistor Type)	1
346	93705	Screw – Hex Hd.	1
356	398808	Wire – Ground	1
363	19069	Puller – Flywheel (Optional Accessory)	1
383	89838	Wrench – Spark Plug	1
455	224250	Cup – Starter	1
523	493460	Cap with Dipstick – Oil Filter	1
524	280393	Seal – Filler Tube	1
525	281019	Tube – Oil Filter	1
562	92613	Bolt – Governor Lever	1
572	224328	Baffle – Cylinder	1
592	231082	Nut – Hex	1
613	94231	Screw – Muffler Mtg.	1
615	94474	Pushnut (Governor Crank)	1
616	262578	Crank – Governor	1
625	492717	Tube – Fuel Intake	1
635	66538	Elbow – Spark Plug	1
741	262598	Gear – Timing	1
832	490777	Guard – Muffler	1
842	280966	Seal – O-Ring	1
847	493459	Tube Ass'y – Oil Fill	1
851	493880	Terminal – Ignition Cable	1
869	213512	Seat – Intake Valve (Std.)	1
870	213513	Seat – Exhaust Valve (Std.)	1
871	262001	Guide – Exhaust Valve Note: 63709 Guide – Intake Valve. See Repair Instruction Manual.	1
988	223828	Bracket – Muffler Guard	1

**Included in Carburetor Gasket Set – Part No. 490937

ENGINE BRIGGS & STRATTON MODEL 124702-0136-01

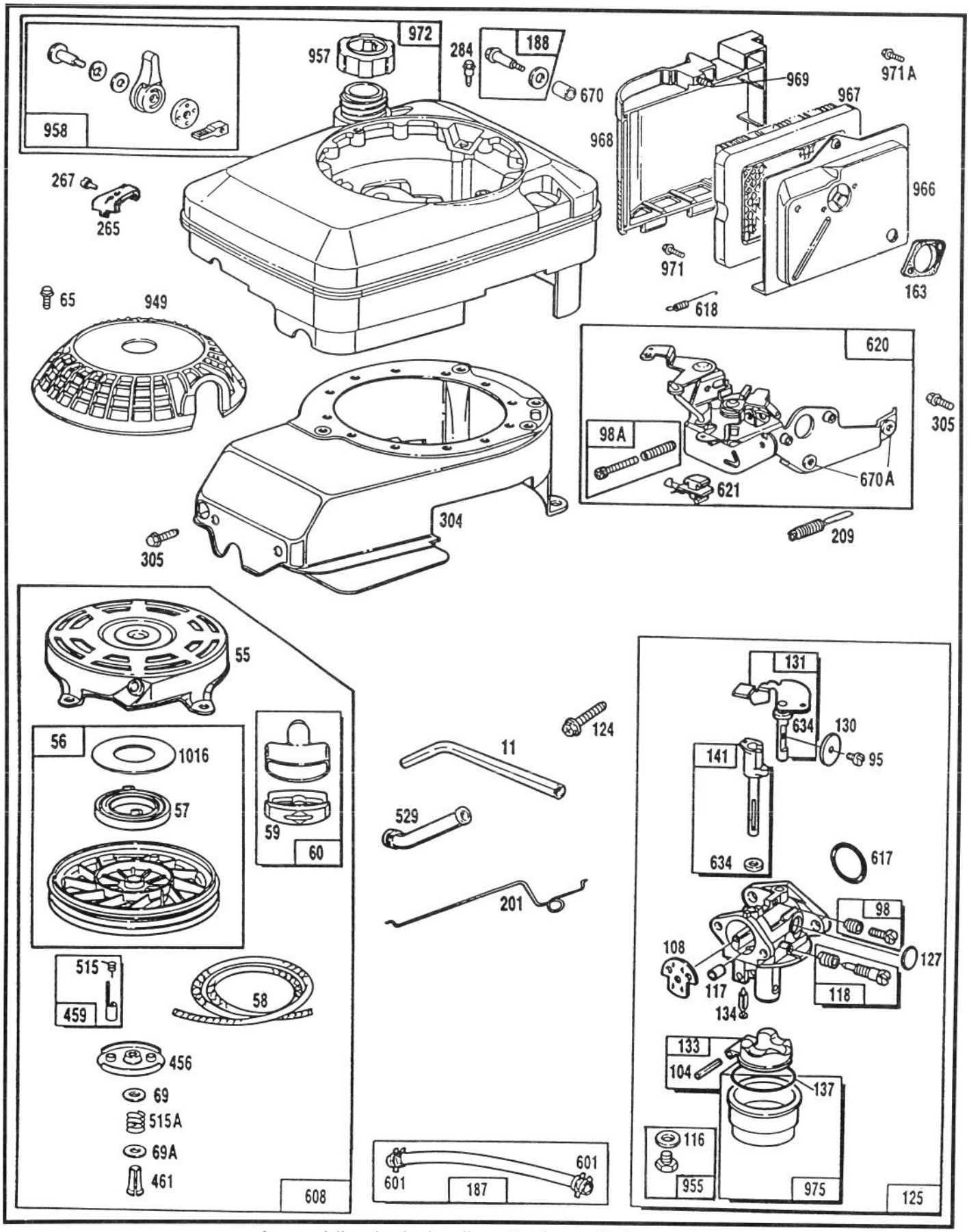

Assemblies include all parts shown in frames.

ENGINE BRIGGS & STRATTON MODEL 124702-0136-01

Ref. No.	Part No.	Description	No. Used
11	231685	Tube – Breather	1
55	492831	Housing – Rewind Starter	1
56	492832	Pulley – Rewind Starter	1
57	262594	Spring – Rewind Starter	1
58	280399	Rope – Rewind Starter (Cut to 88 5/8")	1
59	396892	Insert – Handle	1
60	393152	Handle – Rewind Starter	1
65	94058	Screw – Guard Mounting	1
69	280973	Washer – Rewind Starter	1
69A	224322	Washer – Rewind Starter	1
95	94098	Screw – Throttle Valve Mtg. Sem	1
98	398185	Screw – Idle Adjustment	1
98A	493280	Screw Ass'y – Speed Adj.	1
104	231371	Pin – Float Hinge	1
108	223471	Valve – Choke	1
116	*†	Gasket – Sealing (Sold in Kit Only)	1
117	*	Jet (Sold in Kit Only)	1
118	493765	Valve & Spring – Needle	1
124	94525	Screw – Carburetor Mtg.	1
125	493868	Carburetor Assembly	1
127	*	Plug – Welch (Sold in Kit Only)	1
130	223470	Valve – Throttle	1
131	493267	Shaft & Lever – Throttle	1
133	398187	Float Ass'y – Carburetor	1
134	398188	Valve – Inlet (Incl. Seat)	1
137	*†	Gasket – Bowl (Sold in Kit Only)	1
141	493266	Shaft – Choke	1
163	272296	Gasket – Air Cleaner	1
187	492790	Hose – Fuel (Cut to Suit)	1
188	398540	Screw – Tank Mounting (Includes Washer)	1
201	262579	Link – Governor	1

Ref. No.	Part No.	Description	No. Used
209	262661	Spring – Governor	1
265	221535	Clamp – Casing	1
267	94204	Screw – Clamp Mtg.	1
284	94511	Screw – Hex Hd.	1
304	493294	Housing – Blower	1
305	94513	Screw – Hex Hd. Sem	1
456	224321	Retainer – Rewind Starter	1
459	492833	Pawl – Starter	1
461	262626	Pin – Starter	1
515	262556	Spring – Pawl	1
515A	262625	Spring – Torsion	1
529	280943	Grommet – Breather	1
601	93053	Clamp – Hose (Green) Note: 93807 Clamp – Hose (Black)	1
608	493295	Starter Ass'y – Rewind	1
617	*†270344	Seal – Fuel Intake Tube	1
618	260870	Spring – Choke Return	1
620	492978	Bracket Assembly – Carburetor Control	1
621	396847	Switch – Stop	1
634	*†	Washer – Throttle Shaft (Sold in Kit Only)	1
670	280512	Spacer – Fuel Tank	1
670A	493823	Spacer – Carb. Brkt.	2
949	280946	Guard – Finger	1
955	493869	Screw – Bowl Mtg.	1
957	397974	Cap Assembly – Fuel	1
958	493277	Valve – Fuel Shut-Off	1
966	492363	Base – Air Cleaner	1
967	491588	Filter – Air	1
968	280937	Cover – Air Cleaner	1
969	94120	Screw – Cover Mtg.	1
971	94269	Screw – Air Cleaner	1
971A	94121	Screw – Backplate to Carb.	1
972	492858	Tank Assembly – Fuel	1
975	493640	Bowl Ass'y – Carburetor	1
1016	224278	Cover – Rewind Starter	1

*Included in Carburetor Overhaul Kit – Part No. 493762
†Included in Carburetor Gasket Set – Part No. 490937

PRODUCT CHANGES

In an effort to make improvements available to TORO owners as quickly as possible, minor changes are incorporated into Toro's products from time to time that do not become immediately shown in the Parts Catalog. If such a change has been made in your unit, which is not reflected in your manual, see your TORO Distributor or his Authorized TORO Service Dealer for information and part numbers.

IDENTIFICATION AND ORDERING

MODEL AND SERIAL NUMBERS

The Lawnmower has two identification numbers; a model number and a serial number. The two numbers are stamped on a decal which is located on the rear of the housing. In any correspondence concerning the lawnmower, supply model and serial numbers to assure that correct information and replacement parts are obtained.

To order replacement parts from an Authorized TORO Service Dealer, supply the following information:
1. Model and serial number of the lawnmower.
2. Part number, description, and the quantity of part(s) desired.

NOTE: Do not order by reference number if a parts catalog is being used; use the PART NUMBER.

COUNTRIES OTHER THAN THE UNITED STATES OR CANADA

Customers who have purchased TORO products exported from the United States or Canada should contact their Toro Distributor (Dealer) to obtain guarantee policies for your country, province or state. If for any reason you are dissatisfied with your Distributor's service or have difficulty obtaining guarantee information, contact the TORO importer. If all other remedies fail, you may contact us at The Toro Company.

MAINTENANCE RECORD

Date								

Compliance with Radio Interference Regulations Certified.
Certifie Conforme au Reglement sur le Brouillage Radioelectrique.

Litho in U.S.A.
LTS 010383