FORM NO. 3314-506 REV.A

TORO®

MODEL NO. 16400-1000001-2000001 & UP

PARTS CATALOG

21" SIDE DISCHARGE MOWER

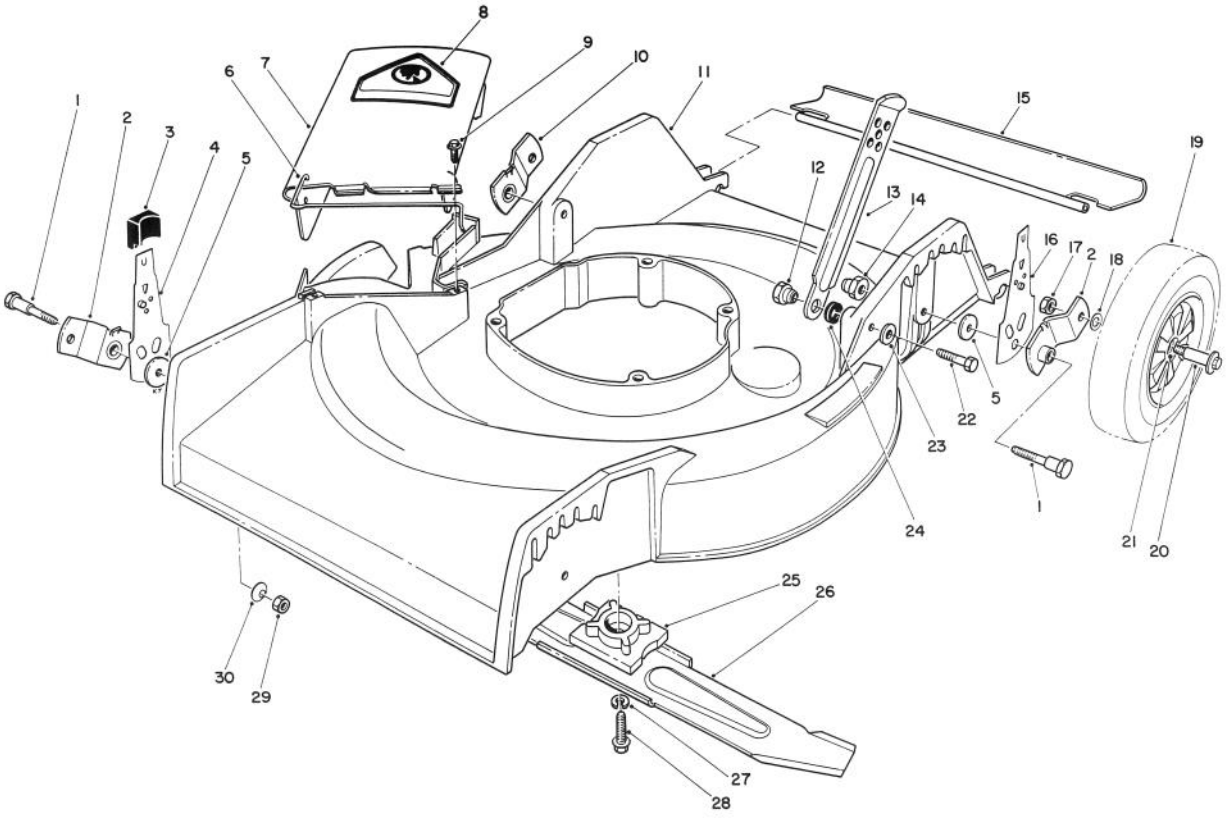

C-0275

HOUSING ASSEMBLY

Ref. No.	Part No.	Description	No. Used
1	3-0655	Screw - Pivot	4
2	20-2140	Pivot Arm "A"	2
3	25-7740	Knob - Spring Arm	4
4	66-6070	Spring Arm Front - R.H.	1
*	66-6010	Spring Arm - Front L.H.	1
5	33-0390	Washer - Pivot	4
6	20-2640	Hinge - Spring	1
7	13-4049	Deflector (Incl. Ref. #6 & 8)	1
8	39-5770	Decal - Danger	1
9	46-6811	Screw & Washer Assembly	2
10	20-2130	Pivot Arm "B"	2
11	13-2439	Housing	1
12	27-6520	Nut - Shoulder	2
13	82-7620	Latch - Handle	2
14	12-2080	Nut - Shoulder	2
15	13-2439	Shield - Rear	1

Ref. No.	Part No.	Description	No. Used
16	66-6030	Spring Arm - Rear	2
17	52-3620	Locknut	4
18	40-1940	Washer - Wheel Bolt	4
19	27-6200	Wheel & Tire Assembly (Incl. Ref. #21)	4
20	27-6230	Bolt - Wheel	4
21	27-6250	Bushing - Wheel	8
22	322-7	Screw - Hex Hd. Cap	2
23	3253-4	Washer - Lock	2
24	3-3287	Spacer - Handle Latch	2
25	49-7900	Retainer - Blade	1
26	20-2720	Blade	1
27	3253-22	Lockwasher	1
28	26-0671	Screw - Blade	1
29	3296-29	Locknut	2
30	3290-456	Washer - Belleville	2

*Not illustrated

© The TORO Company - 1990 REV. 1991

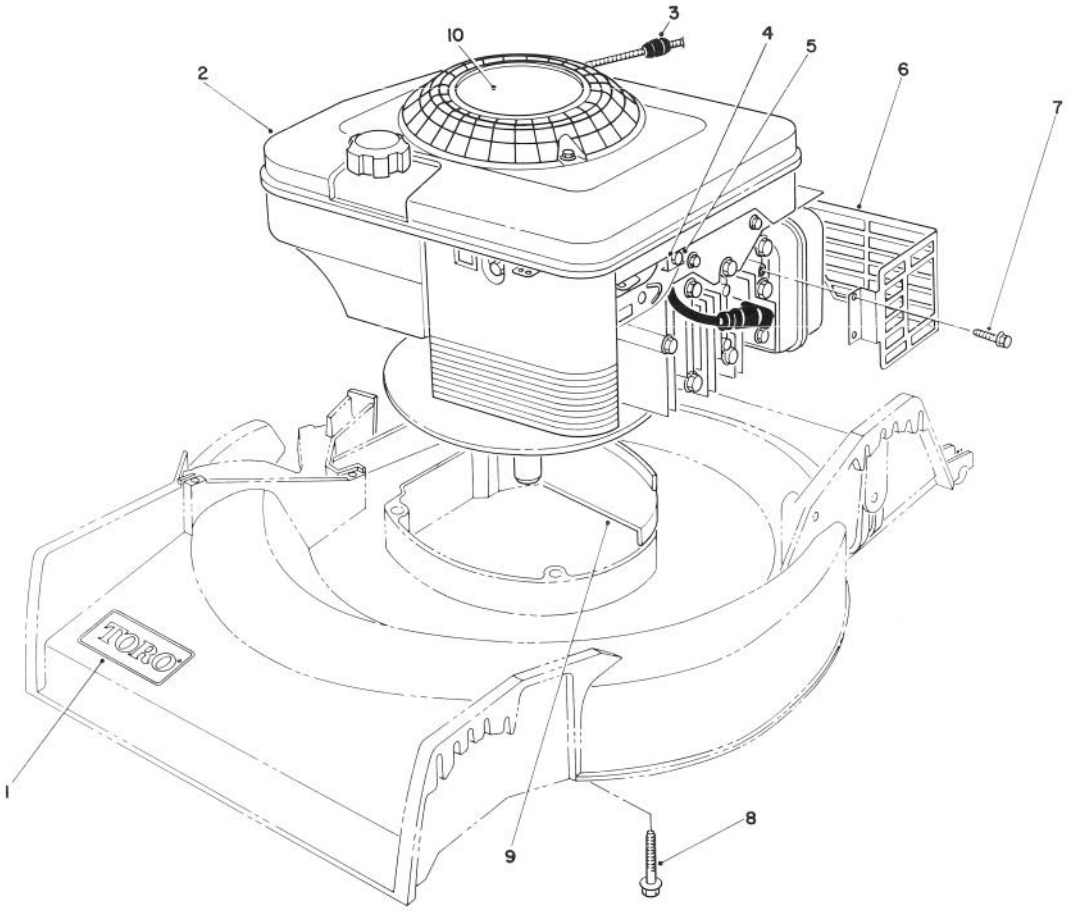

C-0666

ENGINE ASSEMBLY

Ref. No.	Part No.	Description	No. Used
1	71-0600	Decal - Toro	1
2		Engine	1
3	2210-316	Stop - Rope	1
4	2210-249	Clamp - Casing	1
5	2210-313	Screw - Clamp	1
6	82-8550	Shield - Muffler	1

Ref. No.	Part No.	Description	No. Used
7	32144-73	Screw - Hex Washer Hd. Thread Forming	3
8	32144-105	Screw - Engine	3
9	27-7470	Cap - Housing	1
10	80-2860	Decal - Engine	1

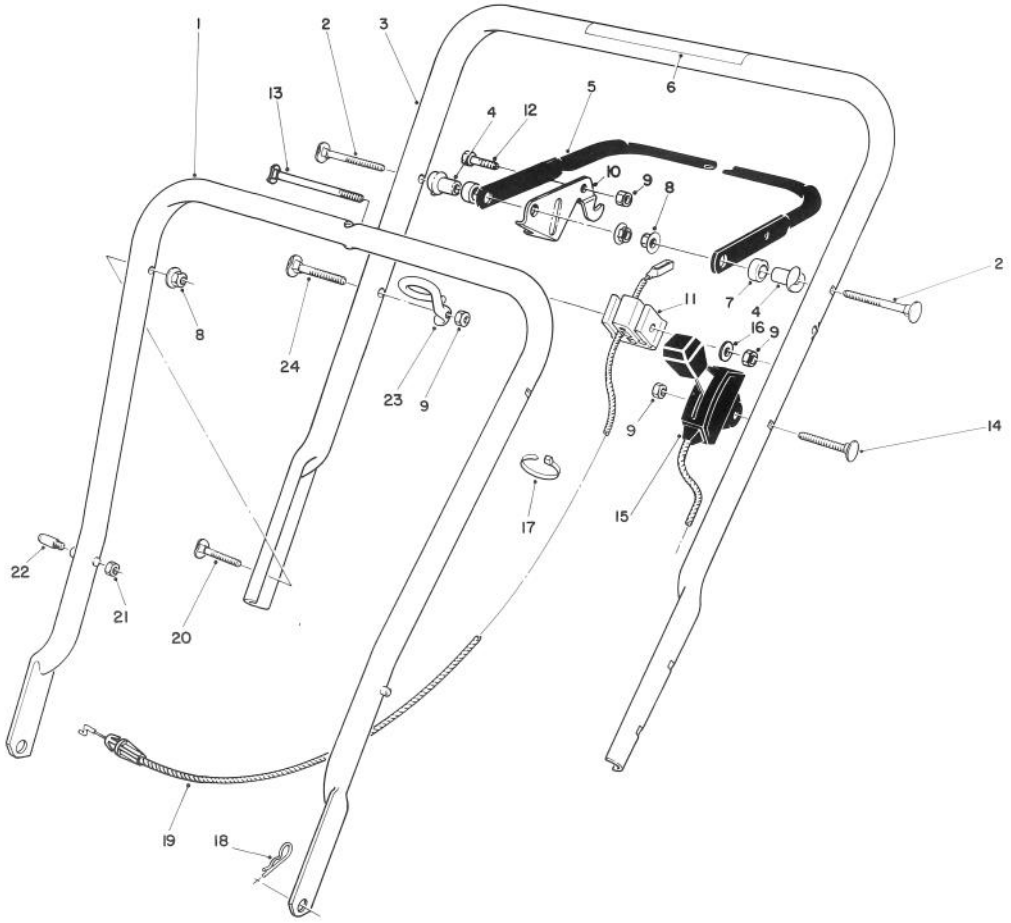

C-0277

HANDLE ASSEMBLY

Ref. No.	Part No.	Description	No. Used
1	49-1690	Lower Handle Assembly	1
2	17-9421	Screw - Handle	2
3	14-3549	Handle - Upper (Incl. Ref. #6)	1
4	49-1630	Support - Spacer	2
5	71-3080	Bar - Control	1
6	56-6280	Decal - Warning	1
7	256-276	Spacer - Nylon	2
8	3296-58	Nut - Flange Lock	4
9	3296-42	Nut - Lock	4
10	77-5270	Lever - Control	1
11	46-6980	Support - Cable	1
12	321-3	Capscrew	1
13	46-6434	Screw - Handle	1
14	46-6430	Screw - Handle	1
15	76-3248	Control - Throttle (Bend Type #1) (Sheath Lg. 44-1/4") (Wire Lg. 1-3/4")	1
16	3256-22	Washer - Flat	1
17	3290-378	Tie - Cable	2
18	3290-255	Pin - Cotter Hair	2
19	76-4332	Cable - Brake	1
20	17-9424	Screw - Handle	2
†21	3296-47	Nut - Lock	2
†22	49-2750	Pin - Handle	2
23	46-8080	Guide - Rope	1
24	46-6433	Screw - Handle	1
*	14-3699	Loose Parts	1

*Not Illustrated

† Service Replacement Part

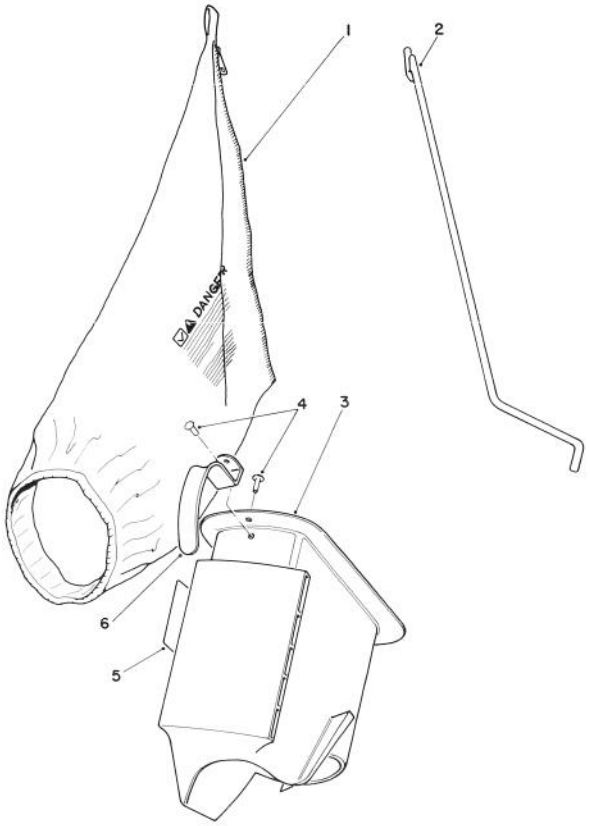

C-0187

BAGGING KIT NO. 47-6510 (Optional)

Ref. No.	Part No.	Description	No. Used
1	6-0929	Grass Bag	1
2	47-5830	Bag Rod	1
3	6-1089	Grass Chute (Incl Ref #4 & 6)	1

Ref. No.	Part No.	Description	No. Used
4	3295-26	Rivet	2
5	36-5230	Decal - Bag Chute	1
6	20-4650	Handle Chute	1

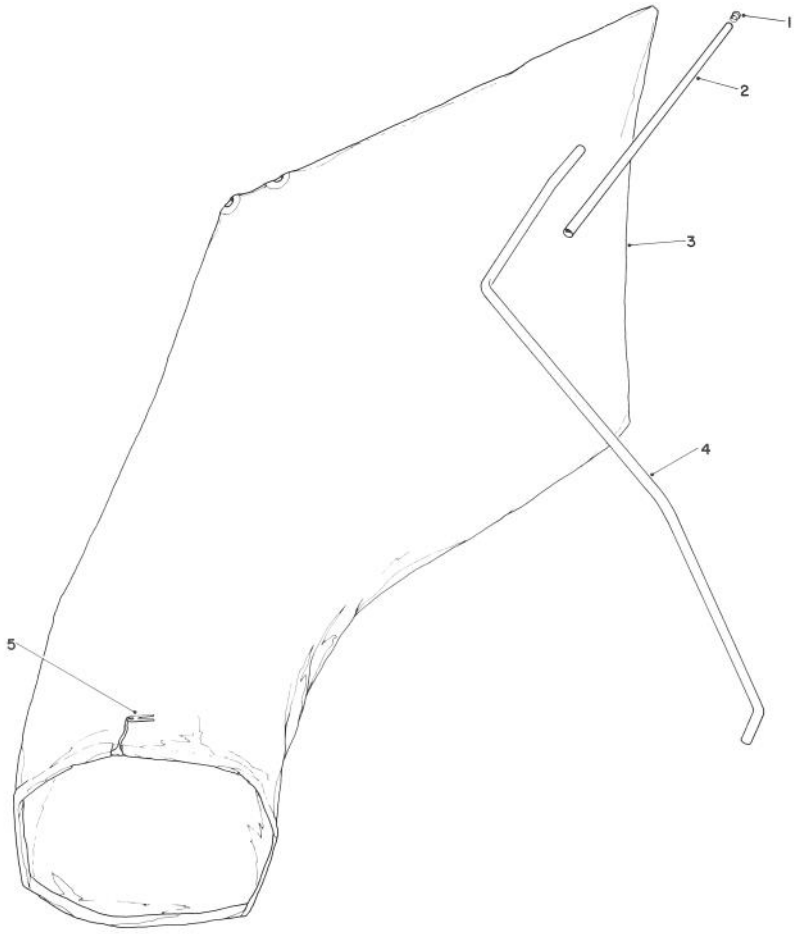

C-0190

GIANT BAGGING KIT NO. 29-9750 (Optional)

Ref. No.	Part No.	Description	No. Used
1	2410-29	Cap	1
2	29-7000	Tube 25"	1
3	8-4719	Bag	
		(Incl. Ref. #5)	1
4	22-4820	Hanger Rod	1
5	3-2781	Bag Cord Fasteners	1

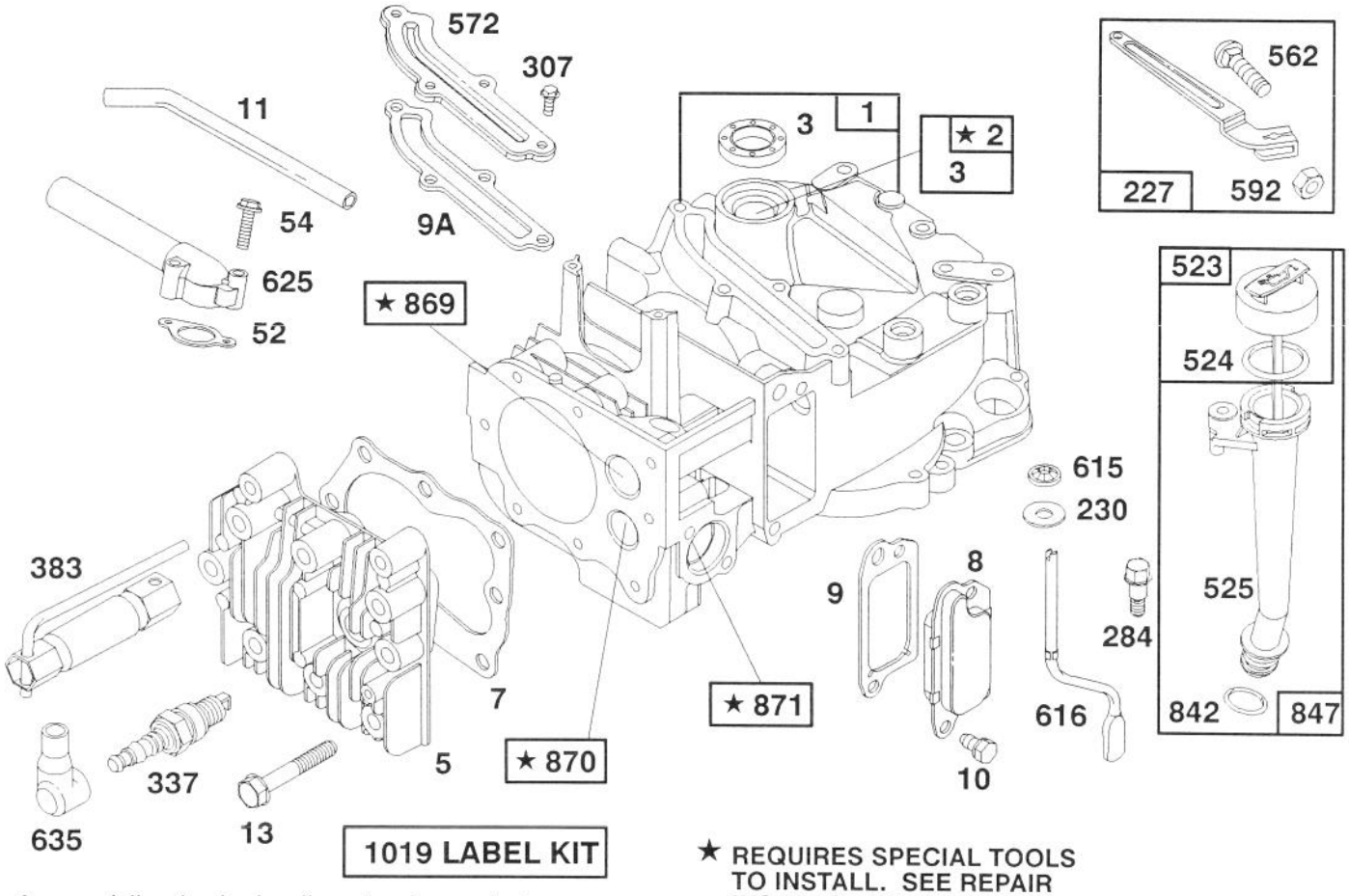

★ REQUIRES SPECIAL TOOLS TO INSTALL. SEE REPAIR INSTRUCTION MANUAL.

Assemblies include all parts shown in frames.

ENGINE BRIGGS & STRATTION MODEL 122702-3171-01

Ref. No.	Part No.	Description	No. Used
1	493260	Cylinder Assembly	1
2	293708	Bushing-Cylinder	1
		Note:Requires Special Tools for Installation.	
★3	393862	Seal-Oil	1
5	213861	Head-Cylinder	1
★7	272200	Gasket-Cylinder Hd.	1
8	399717	Breather-Valve Chamber	1
★9	271904	Gasket-Valve Cover	1
★9A	272238	Gasket-Baffle Plate	1
10	94222	Mounting Sem	1
11	231685	Tube-Breather	1
13	94547	Screw-Cylinder Hd.	1
★52	272199	Gasket-Intake Elbow	1
54	94526	Screw-Intake Elbow Mounting	1
227	492349	Lever Assembly-Gov.	1
230	67072	Washer-Governor Crank	1
284	94511	Screw-Hex. Head	1
307	94515	Screw-Hex. Head	1
337	802592	Plug-Spark	1
383	89838	Wrench-Spark Plug	1
523	493950	Cap with Dipstick-Oil Filler	1

Ref. No.	Part No.	Description	No. Used
524	280393	Seal-Filler Tube	1
525	493952	Tube-Oil Filler	1
562	92613	Bolt-Governor Lever	1
572	224328	Baffle-Cylinder	1
592	231082	Nut-Hex.	1
615	94474	Pushnut (Governor Crank)	1
616	262578	Crank-Governor	1
625	492717	Tube-Fuel Intake	1
635	66538	Elbow-Spark Plug	1
842	280966	Seal-O-Ring	1
847	493459	Oil Fill Tube and Dipstick Assy.	1
869	213512	Seat-Intake Valve	1
870	213513	Seat-Exhaust Valve	1
871	262001	Guide-Exhaust Valve	1
		Note:63709 Guide-Intake Valve See Repair Instruction Manual.	1
1019	494256	Label Kit	1

★ Included in Gasket Set- Part No. 493263.

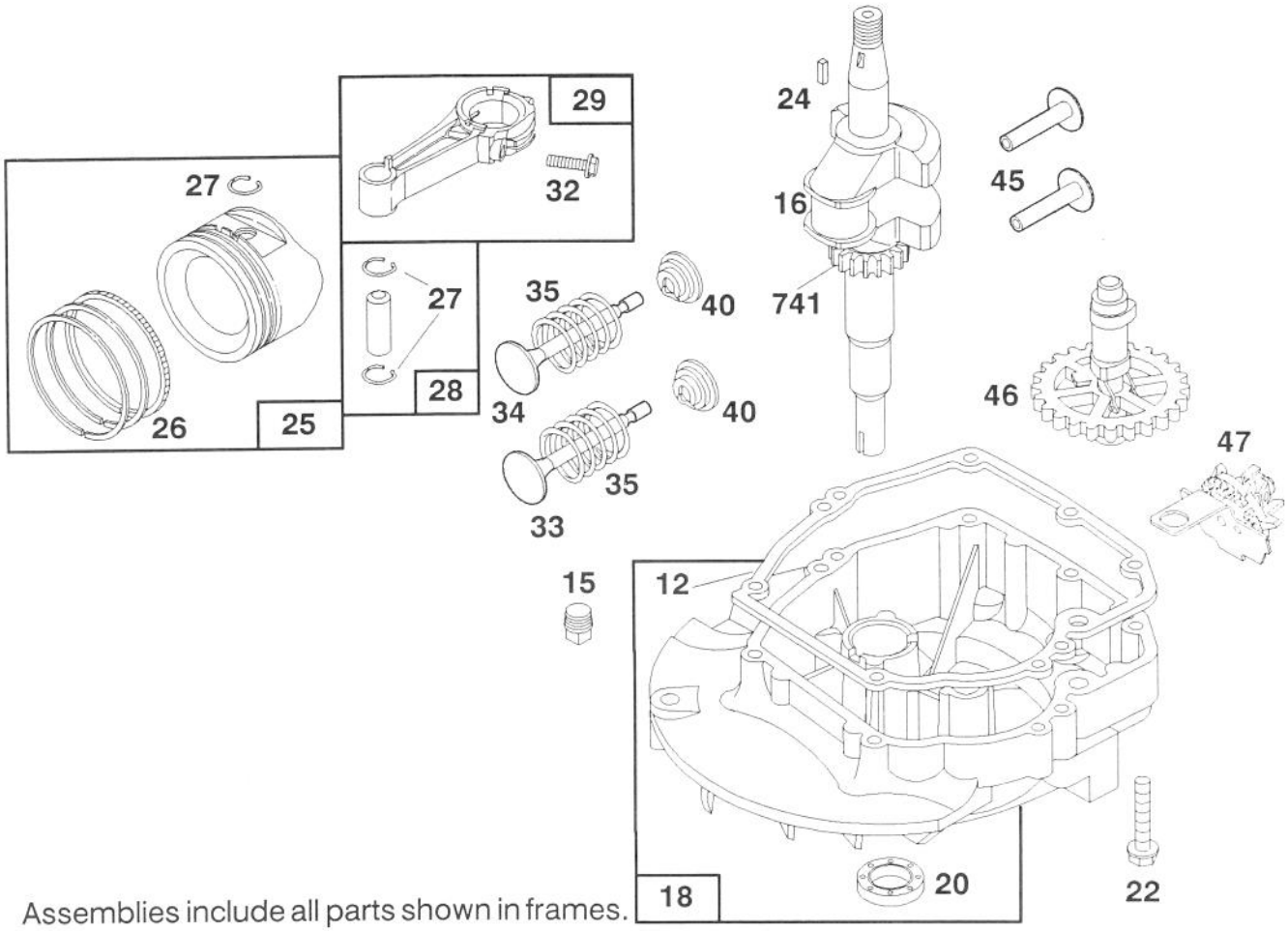

Assemblies include all parts shown in frames.

ENGINE BRIGGS & STRATTON MODEL 122702-3171-01

Ref. No.	Part No.	Description	No. Used
★12	272198	Gasket-Crankcase	1
15	94613	Plug-Oil Drain	1
16	493731	Crankshaft	1
		Note: Order 94388 For Timing Gear Key	
18	493279	Sump-Engine	1
★20	399781	Seal-Oil	1
22	94220	Screw-Sump Mtg. Sem	1
		Note: 94612 Screw-Hex. Washer Head (One (1) Used in Hole Nearest Breather)	
24	222698	Key-Flywheel	1
25	493262	Piston Assy.-Standard	1
	493385	Piston Assy.-.010" O.S.	1
	493386	Piston Assy.-.020" O.S.	1
	493387	Piston Assy.-.030" O.S.	1
		PISTON RING SETS:	
		Note: For Chrome Piston Ring Set-Standard Size-Order Part No. 493391.	
26	493261	Ring Set-Std. Piston	1
	493388	Ring Set-.010" O.S. Piston	1
	493389	Ring Set-.020" O.S. Piston	1
	493390	Ring Set-.030" O.S. Piston	1
27	26026	Lock-Piston Pin	1
28	298909	Pin Assembly-Piston-Standard	1
	298908	Pin Assembly-Piston-.005" O.S.	1
29	490566	Rod Assembly- Connecting	1
		Note: For Connecting Rod with .020" Undersize Crankpin Bearing- Order No. 490743.	
32	94405	Screw-Connecting Rod	1
33	262651	Valve-Exhaust	1
34	262652	Valve-Intake	1
35	262224	Spring-Valve	1
40	93312	Retainer-Valve Spring	1
45	262204	Tappet-Valve	1
46	492828	Gear-Cam	1
47	493737	Oil Slinger Gear and Bracket	1
741	262598	Gear-Timing	1

★ Included in Gasket Set- Part No. 493263.

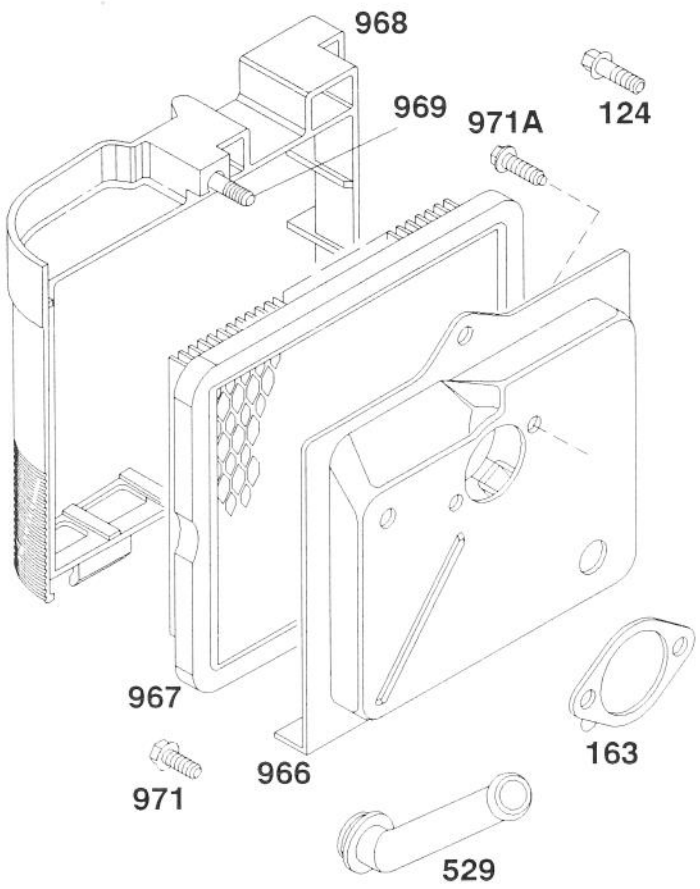

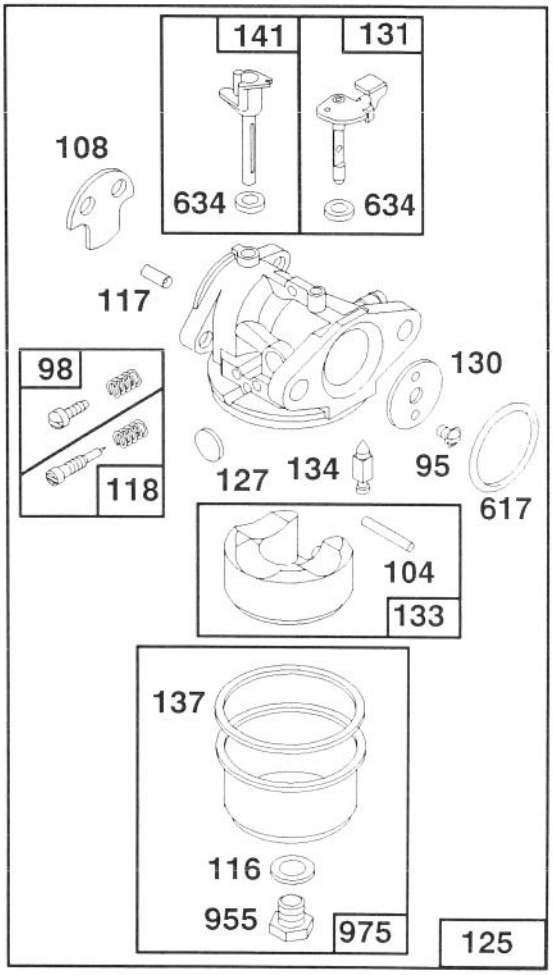

Assemblies include all parts shown in frames.

ENGINE BRIGGS & STRATTON MODEL 122702-3171-01

Ref. No.	Part No.	Description	No. Used
95	94098	Screw-Throttle Valve Mounting Sem	1
98	398185	Screw-Idle Adjustment	1
•104	231371	Pin-Float Hinge	1
108	223471	Valve-Choke	1
•◆116		Gasket-Sealing (Sold in Kit Only).	1
•117		Jet (Sold in Kit Only).	1
118	493765	Valve and Spring- Needle	1
124	94525	Screw-Carburetor Mtg.	1
125	494216	Carburetor Assembly	1
•127		Plug-Welch (Sold in Kit Only).	1
130	223470	Valve-Throttle	1
131	493267	Shaft and Lever- Throttle	1
133	398187	Float Assy.-Carburetor	1
•134	398188	Valve-Inlet (Includes Seat)	1
•◆137		Gasket-Bowl (Sold in Kit Only).	1
141	494218	Shaft-Choke	1
★163	272296	Gasket-Air Cleaner	1
529	280943	Grommet-Breather	1
•◆617	270344	Seal-Fuel Intake Tube	1
•◆634		Washer-Shaft (Sold in Kit Only)	1
955	493763	Screw-Bowl Mtg.	1
966	492363	Base-Air Cleaner	1
967	491588	Filter-Air	1
968	280937	Cover-Air Cleaner	1
969	94120	Screw-Cover Mtg.	1
971	94269	Screw-Air Cleaner	1
971A	94121	Screw-Base to Carburetor	1
975	493640	Bowl Assy.	1

• Included in Carburetor Overhaul Kit- Part No. 493762.
◆ Included in Carburetor Gasket Set- Part No. 490937.
★ Included on Gasket Set- Part No. 493263.

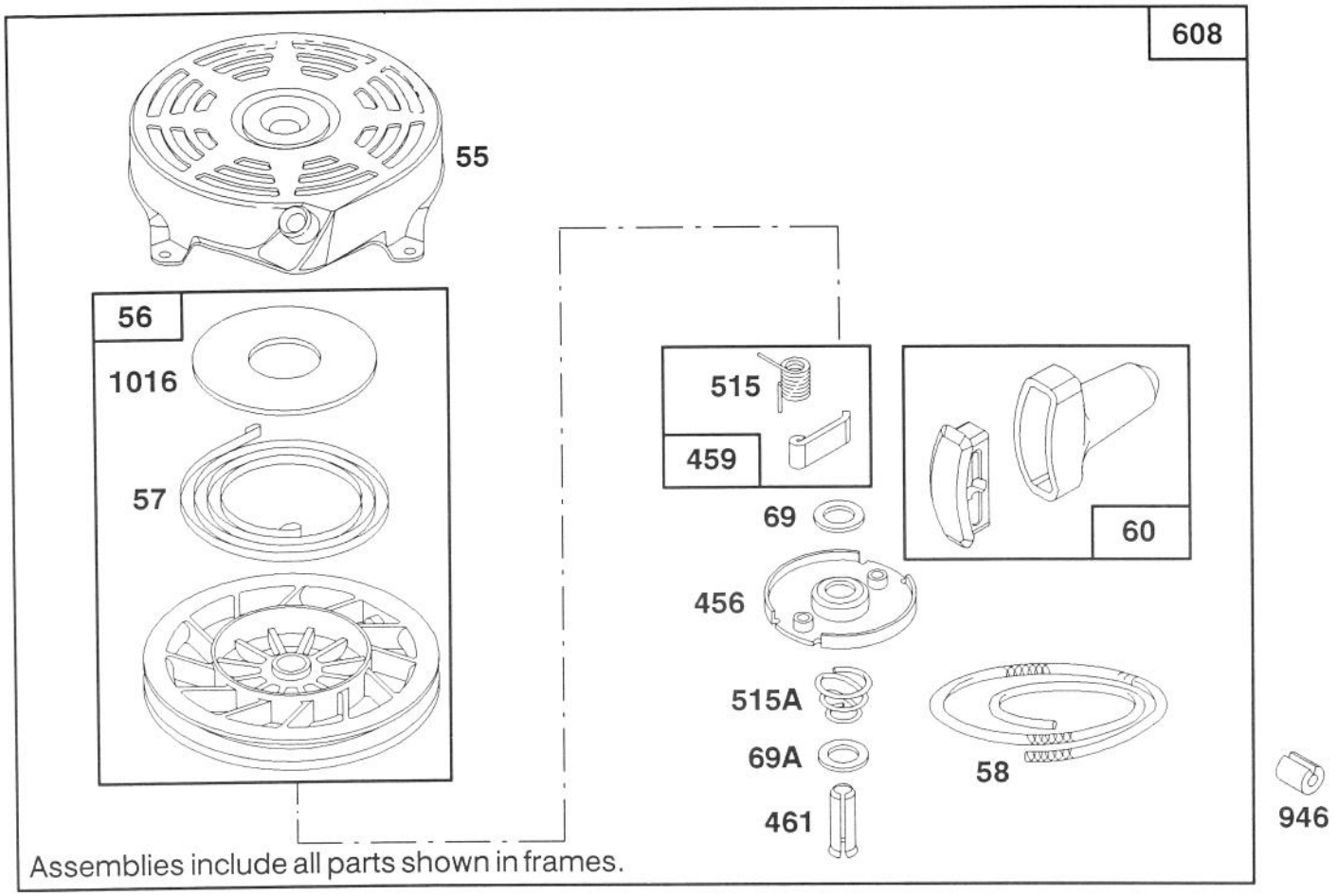

ENGINE BRIGGS & STRATTON MODEL 122702-3171-01

Ref. No.	Part No.	Description	No. Used
55	492831	Housing-Rewind Starter	1
56	492832	Pulley-Rewind Starter	1
57	262594	Spring-Rewind Starter	1
58	280399	Rope-Rewind Starter	1
60	393152	Handle-Rewind Starter	1
69	280973	Washer-Rewind Starter	1
69A	224322	Washer-Rewind Starter	1
456	224321	Retainer-Rewind Starter	1

Ref. No.	Part No.	Description	No. Used
459	492833	Pawl-Starter	1
461	262626	Pin-Starter	1
515	262556	Spring-Pawl	1
515A	262625	Spring-Torsion	1
608	493295	Starter Assy.-Rewind	1
946	223294	Stop Rope	1
1016	224278	Cover-Rewind Starter	1

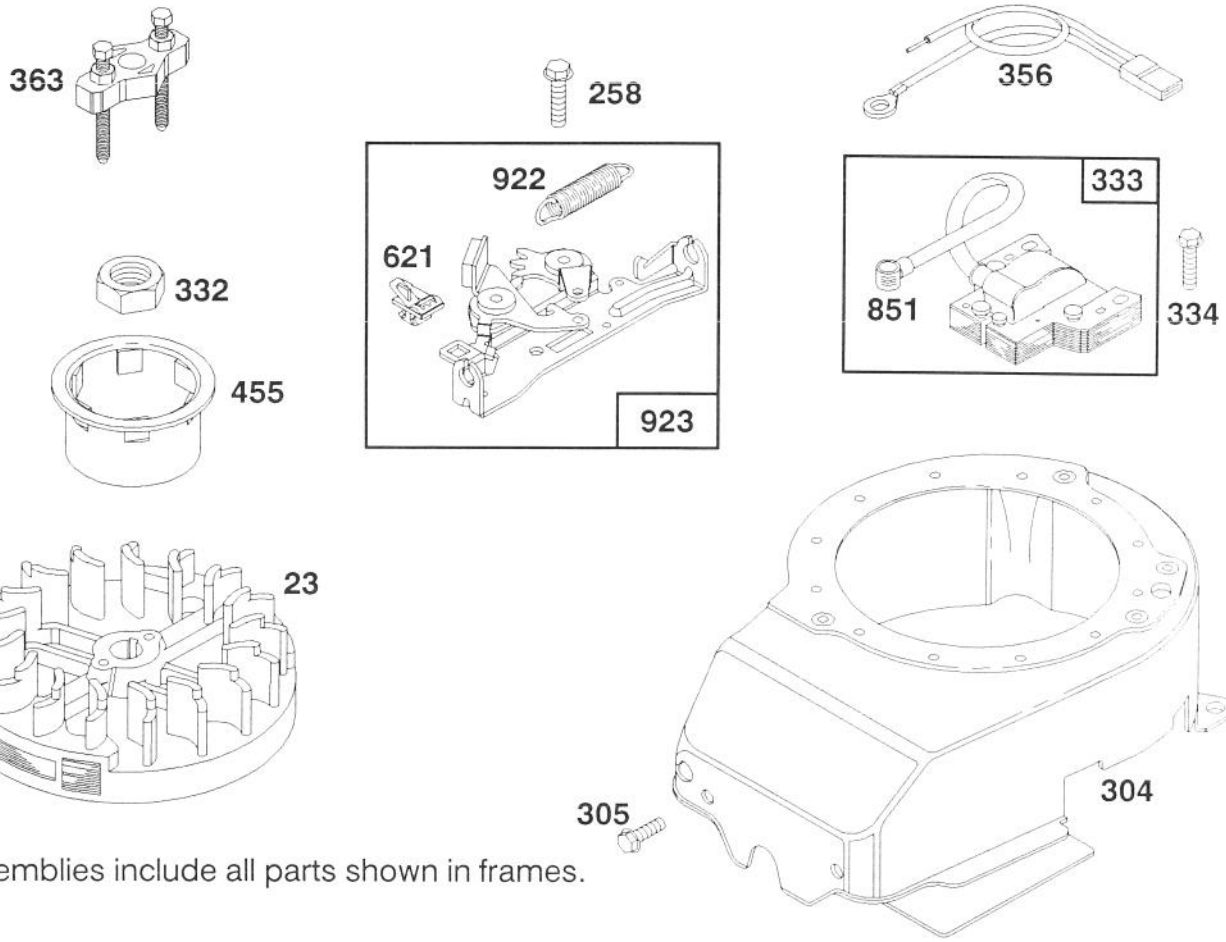

Assemblies include all parts shown in frames.

ENGINE BRIGGS & STRATTON MODEL 122702-3171-01

Ref. No.	Part No.	Description	No. Used
23	492177	Flywheel-Magneto	1
258	94512	Screw-Hex. Hd.	1
304	493293	Housing- Blower	1
305	94513	Screw-Hex. Head Sem	1
332	92284	Nut-Flywheel	1
333	802574	Armature-Magneto	1
334	93381	Screw-Armature Mounting Sem	1

Ref. No.	Part No.	Description	No. Used
356	398808	Wire-Ground	1
363	19069	Puller-Flywheel (Optional Accessory)	1
455	224250	Cup-Starter	1
621	396847	Switch-Stop	1
851	221798	Terminal-Ignition Cable	1
922	262640	Spring-Brake	1
923	492918	Brake Assy.	1

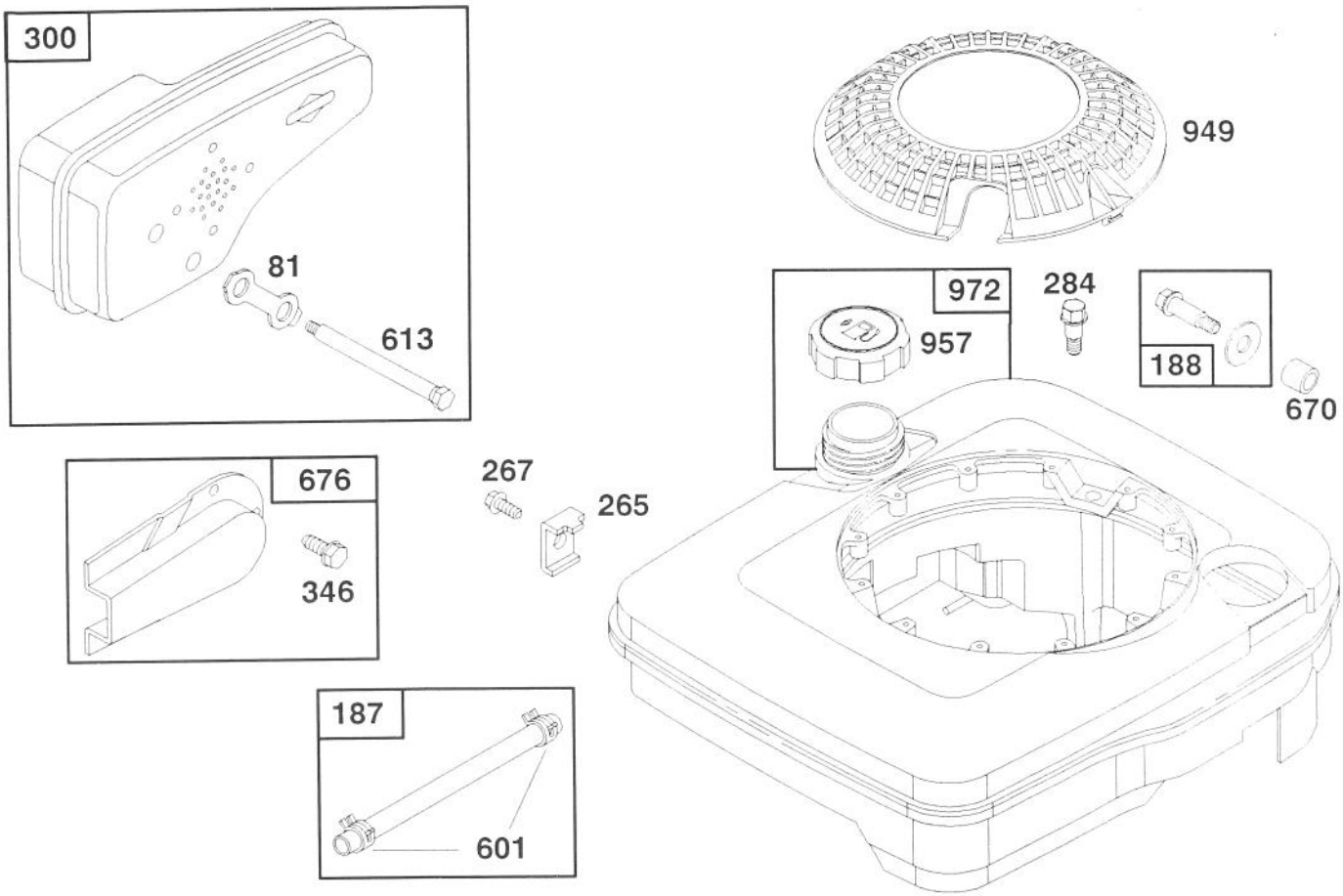

Assemblies include all parts shown in frames.

ENGINE BRIGGS & STRATTON MODEL 122702-3171-01

Ref. No.	Part No.	Description	No. Used
81	223664	Lock-Muffler Screw	1
187	492790	Hose-Fuel	1
188	398540	Screw-Tank Mounting (Includes Washer)	1
265	221535	Clamp-Casing	1
267	94204	Screw-Clamp Mtg.	1
284	94511	Screw-Hex. Head	1
300	490547	Muffler-Exhaust	1

Ref. No.	Part No.	Description	No. Used
346	93705	Screw-Hex. Head	1
601	93807	Clamp-Hose	1
613	94231	Screw-Muffler Mtg.	1
670	280512	Spacer-Fuel Tank	1
676	493871	Deflector-Muffler	1
949	281136	Screen-Static	1
957	397974	Cap Assy.-Fuel	1
972	494358	Tank Assembly-Fuel	1

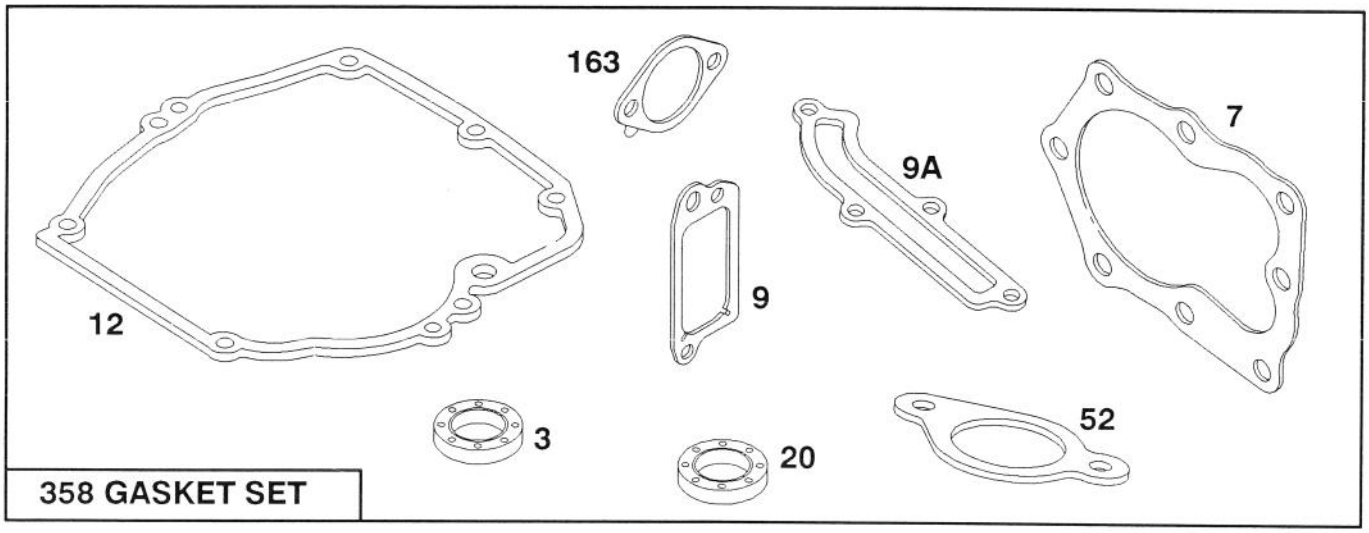

358 GASKET SET

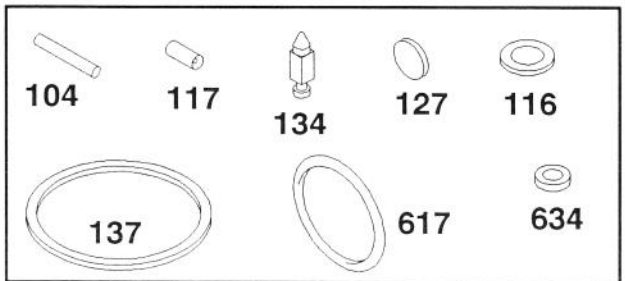

121 CARBURETOR OVERHAUL KIT

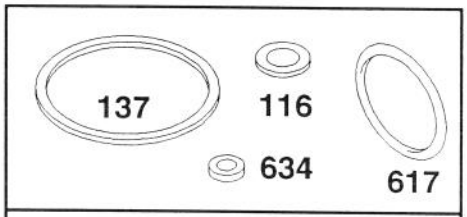

977 CARBURETOR GASKET SET

Assemblies include all parts shown in frames.

ENGINE BRIGGS & STRATTON MODEL 122702-3171-01

Ref. No.	Part No.	Description	No. Used
★3	393862	Seal-Oil	1
★7	272200	Gasket-Cylinder Hd.	1
★9	271904	Gasket-Valve Cover	1
★9A	272238	Gasket-Baffle Plate	1
★12	272198	Gasket-Crankcase	1
★20	399781	Seal-Oil	1
★52	272199	Gasket-Intake Elbow	1
•104	231371	Pin-Float Hinge	1
••◆116		Gasket-Sealing (Sold in Kit Only).	1
•117		Jet (Sold in Kit Only).	1
121	493762	Carburetor Overhaul Kit	1
•127		Plug-Welch (Sold in Kit Only).	1
•134	398188	Valve-Inlet (Includes Seat)	1
••◆137		Gasket-Bowl (Sold in Kit Only).	1
★163	272296	Gasket-Air Cleaner	1
358	493263	Gasket Set	1
••◆617	270344	Seal-Fuel Intake Tube	1
••◆634		Washer-Shaft (Sold in Kit Only)	1
977	490937	Gasket Set-Carburetor	1

• Included in Carburator Overhaul Kit- Part No. 493762.
◆ Included in Carburetor Gasket Set- Part No. 490937.
★ Included in Gasket Set- Part No. 493263.