Form Number 3357-325 Rev A

# Groundsmaster® 3280-D

## 4-Wheel Drive

**Model No. 30345 - 270000001 and up.**

# Parts Catalog

**Ordering Replacement Parts**

To order replacement parts, please supply the part number, the quantity, and the description of each part desired.

**Understanding Reference Numbers**

Each Identified part in an illustration has a reference number. The reference number for a part also appears in the parts list, along with other information about the part.

This catalog uses two special reference number formats, one to indicate parts in a service assembly and another to indicate the quantity of a given part in an illustration.

**Service Assembly Reference Numbers**

Parts in service assemblies have reference numbers in the form a:b. The a represents the reference number of the entire service assembly and the b represents a sequential number unique to each part within the service assembly.

For example, a wheel assembly might be identified by reference number 6, the tire by 6:1, the valve by 6:2, and the wheel by 6:3. When you order the assembly identified by reference number 6, you receive all parts identified by reference numbers 6:1, 6:2, and 6:3. However, you may also order any part individually. Reference numbers of this type appear in illustrations and in part lists.

**Reference Numbers Indicating Quantity**

In an illustration, if a reference number indicates more than one part, the reference number has the form nX y. The n represents the quantity of the part, the X is the multiplication symbol, and the y represents the reference number.

For example, in an illustration, the reference number 2X 37 means that two of the parts identified by reference number 37 are indicated.

Register your product at www.Toro.com

**© The Toro Company - 2006**
**All Rights Reserved**

# Contents


| Description | Page |
|---|---|
| Frame and Hood Assembly | 4 |
| Frame Assembly No. 108-2010 | 5 |
| Fuel Tank and Control Panel Assembly | 6 |
| Power Steering Assembly | 7 |
| Traction Pedal Assembly | 8 |
| Brake Pedal Assembly | 9 |
| Battery and Engine Mount Assembly | 10 |
| Power-Take-Off and Shaft Assembly | 11 |
| Hydraulic Cylinder and Lift Arm Assembly | 12 |
| Radiator Assembly | 13 |
| Transmission Installation Assembly | 14 |
| Center Section Assembly Transmission Assembly No. 108-1355 | 15 |
| Neutral Return Arm Assembly Transmission Assembly No. 108-1355 | 17 |
| Fuel Delivery System Assembly | 18 |
| Water and Fuel Filter Assembly No. 98-9305 | 19 |
| Lower Control Panel Assembly | 20 |
| Driveshaft and 4 Wheel Drive Assembly | 21 |
| Rear Axle Assembly | 22 |
| Bevel Pinion Shaft Assembly Rear Axle Assembly No. 106-1120 | 23 |
| Differential Assembly Rear Axle Assembly No. 106-1120 | 24 |
| Axle Support Assembly Rear Axle Assembly No. 106-1120 | 25 |
| Bevel Gearcase Assembly Rear Axle Assembly No. 106-1120 | 26 |
| Bevel Gear Shaft Assembly Rear Axle Assembly No. 106-1120 | 27 |
| Axle Case Assembly Rear Axle Assembly No. 106-1120 | 28 |
| Axle Assembly Rear Axle Assembly No. 106-1120 | 29 |
| Bi-Directional Clutch Assembly No. 95-6296 | 30 |
| Tie Rod Assembly No. 98-3871-03 | 31 |
| Hydraulic Cylinder Assembly No. 99-2415 | 32 |
| Driveshaft Assembly No. 98-5009 | 33 |
| Front Axle Assembly | 34 |
| Front Axle Assembly No. 108-6599-03 | 35 |
| Right and Left Hand Brake Assembly | 37 |
| Air Cleaner and Drive Coupling Assembly | 38 |
| Air Cleaner Assembly No. 104-3428 | 39 |
| Engine Assembly No. 1 | 40 |
| Engine Assembly No. 2 | 41 |
| Crankcase Assembly | 42 |
| Oil Pan Assembly | 43 |
| Cylinder Head Assembly | 44 |
| Gear Case Assembly | 45 |
| Head Cover Assembly | 46 |
| Dipstick and Guide Assembly | 47 |
| Main Bearing Case Assembly | 48 |
| Camshaft and Idle Gear Shaft Assembly | 49 |
| Piston and Crankshaft Assembly | 50 |
| Flywheel Assembly | 51 |
| Fuel Camshaft and Governor Shaft Assembly | 52 |
| Idle Apparatus Assembly | 53 |
| Injection Pump Assembly | 54 |
| Governor Assembly | 55 |
| Speed Control Plate Assembly | 56 |
| Nozzle Holder and Glow Plug Assembly | 57 |
| Nozzle Holder Assembly | 58 |
| Alternator and Pulley Assembly | 59 |
| Alternator (Component Part) Assembly | 60 |
| Starter Assembly | 61 |
| Starter Assembly No. 98-9705 | 62 |
| Water Flange and Thermostat Assembly | 63 |
| Water Pump and Pipe Assembly | 64 |
| Valve and Rocker Arm Assembly | 65 |
| Inlet Manifold Assembly | 66 |
| Fuel Filter and Pump, Muffler Gasket and Engine Operator Manual | 67 |
| Gasket Assembly | 68 |
| Attachments and Accessories List | 69 |

## Part Description Abbreviations

Part descriptions in this catalog may include the following abbreviations.

AR. . . . . as required
ASM. . . . . assembly
BBC. . . . . blade brake clutch
CARR. . . . . carriage
DEG. . . . . degrees
EXT. . . . . external
FH. . . . . flat head
GA. . . . . gauge
HD. . . . . heavy-duty
HF. . . . . hex flange
HH. . . . . hex head
HHF. . . . . hex head flange
HHFTF. . . . . hex head flange thread forming
HJ. . . . . hex jam
HLH. . . . . hex lag head
HOC. . . . . height-of-cut
HSBH. . . . . hex socket button head
HSFH. . . . . hex socket flat head
HSH. . . . . hex socket head
HWH. . . . . hex washer head
HWHTF. . . . . hex washer head thread forming
HYD. . . . . hydraulic
LH. . . . . left hand
NI. . . . . nylon insert
NPTF. . . . . national pipe thread fine
PFH. . . . . phillips flat head
PPH. . . . . phillips pan head
PPHTF. . . . . phillips pan head thread forming
PRH. . . . . phillips round head
PTH. . . . . phillips truss head
PTO. . . . . power-take-off
RH. . . . . right hand
ROPS. . . . . roll-over protection system
SFH. . . . . slotted fillister head
SHH. . . . . slotted hex head
SHWH. . . . . slotted hex washer head
SPH. . . . . slotted pan head
SQH. . . . . square head
SRH. . . . . slotted round head
STD. . . . . standard
TAP. . . . . self tapping
TTH. . . . . torx truss head

## Footnotes

❶ Not illustrated

❷ Not serviced separately

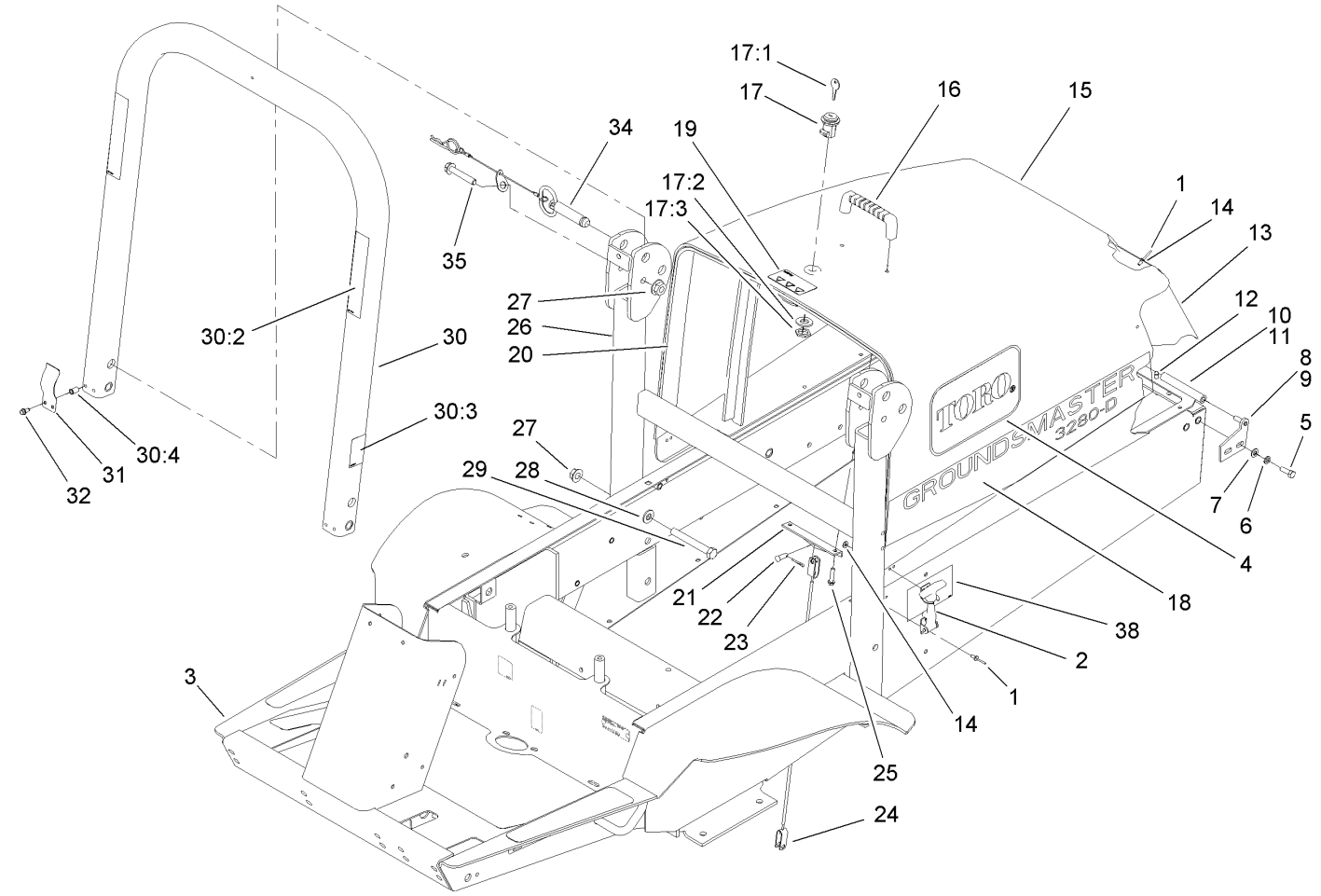


# Frame and Hood Assembly

| Ref | Part No. | Qty. | Description |
|---|---|---|---|
| 1 | 3269-4 | 18 | Rivet-Pop |
| 2 | 95-6339 | 2 | Latch |
| 3 | 108-2010 | 1 | Frame ASM |
| 4 | 66-6140 | 2 | Decal |
| 5 | 322-5 | 4 | Screw-HH |
| 6 | 3253-4 | 4 | Washer-Lock |
| 7 | 3256-23 | 4 | Washer-Flat |
| 8 | 105-0003-01 | 1 | RH Hinge Pin ASM |
| 9 | 105-0004-01 | 1 | LH Hinge Pin ASM |
| 10 | 105-4278-03 | 1 | LH Hood Hinge ASM |
| 11 | 105-4277-03 | 1 | RH Hood Hinge ASM |
| 12 | 3290-412 | 12 | Rivet |
| 13 | 105-0006-03 | 1 | Screen-Hood |
| 14 | 3256-14 | 14 | Washer-Flat |
| 15 | 104-3485 | 1 | Hood |
| 16 | 65-5100 | 1 | Handle-Door |
| 17 | 98-9315 | 1 | Latch-Locking |
| 17:1 | 99-8350 | 2 | Key-Latch, Locking |
| ❷17:2 | | 1 | Washer-Switch |
| ❷17:3 | | 1 | Nut-Switch |
| 18 | 108-2067 | 2 | Decal |
| 19 | 106-6754 | 1 | Decal-Danger |
| 20 | 105-3651 | 1 | Strip-Foam |
| 21 | 105-0088-03 | 1 | Bracket-Cable, Hood |

| Ref | Part No. | Qty. | Description |
|---|---|---|---|
| 22 | 283-58 | 2 | Pin-Clevis |
| 23 | 3272-10 | 2 | Pin-Cotter |
| 24 | 105-3650 | 1 | Cable-Hood |
| 25 | 46-8092 | 2 | Screw-Plastite |
| 26 | 110-5693-03 | 1 | Lower ROPS ASM |
| 27 | 32128-23 | 6 | Nut-HF |
| 28 | 3256-26 | 4 | Washer-Flat |
| 29 | 325-18 | 4 | Screw-HH |
| 30 | 110-5690 | 1 | Upper ROPS ASM |
| 30:2 | 108-2073 | 2 | Decal-Warning |
| 30:3 | 108-2074 | 1 | Decal-ROPS |
| 30:4 | 32148-11 | 4 | Insert-Threaded |
| 31 | 110-5696 | 2 | Spring-Leaf |
| 32 | 32144-10 | 4 | Screw-HWH |
| 34 | 103-4553 | 2 | ROPS Fold Pin ASM |
| 35 | 325-13 | 2 | Screw-HH |
| 38 | 94-8099 | 2 | Decal |

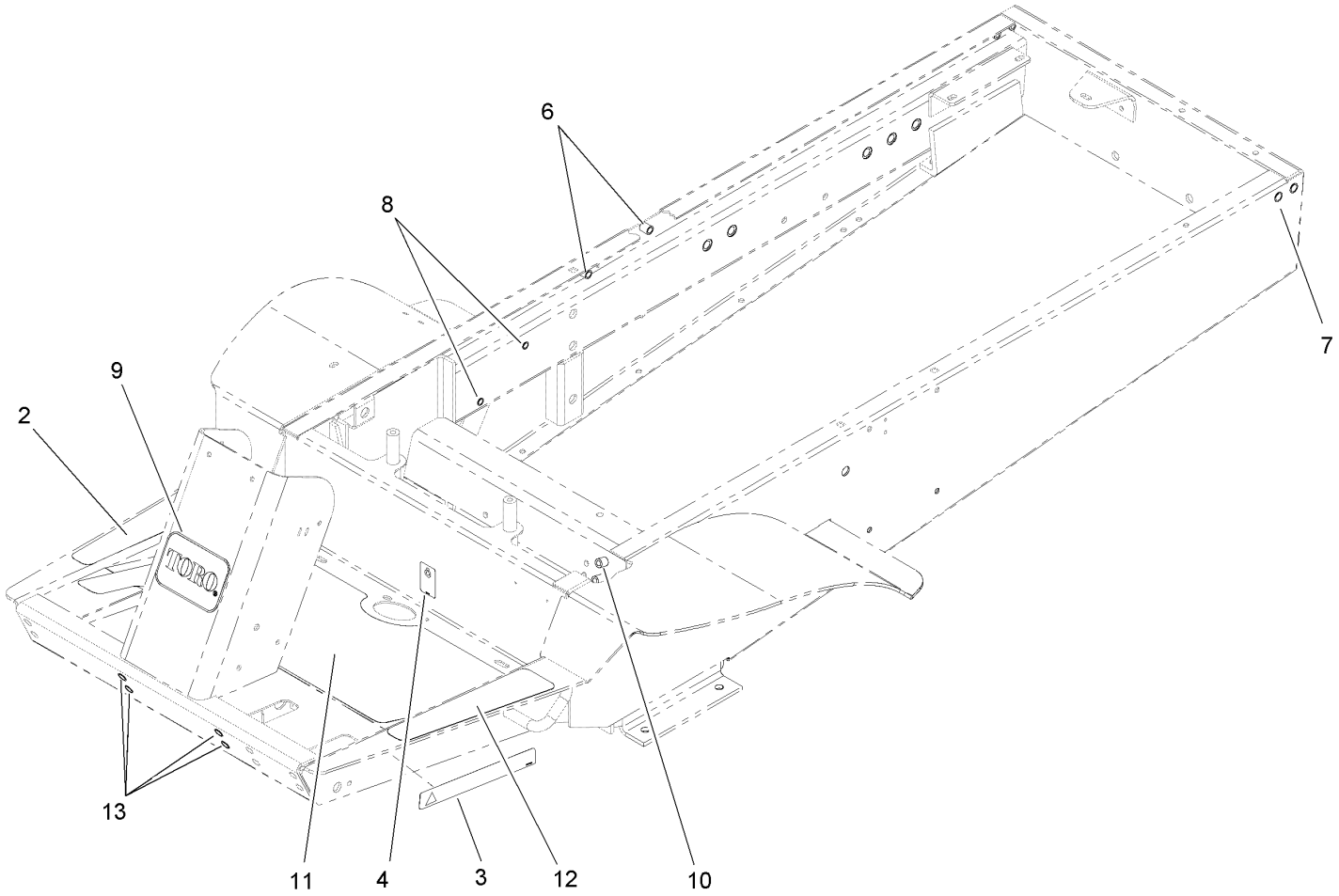


# Frame Assembly No. 108-2010

| Ref | Part No. | Qty. | Description |
|---|---|---|---|
| 2 | 93-7834 | 1 | Decal-Footrest, RH |
| 3 | 106-9206 | 2 | Decal-Torque, Wheel |
| 4 | 93-6686 | 1 | Decal-Oil, HYD |
| 6 | 32148-9 | 2 | Insert-Nut |
| 7 | 32148-7 | 4 | Nut-Insert |
| 8 | 32148-11 | 2 | Insert-Threaded |
| 9 | 67-1300 | 1 | Decal |
| 10 | 32148-8 | 4 | Insert-Threaded |
| 11 | 105-7160 | 1 | Pad-Floor |
| 12 | 66-3200 | 1 | Tread-Footrest, LH |
| 13 | 32148-10 | 4 | Insert-Nut |

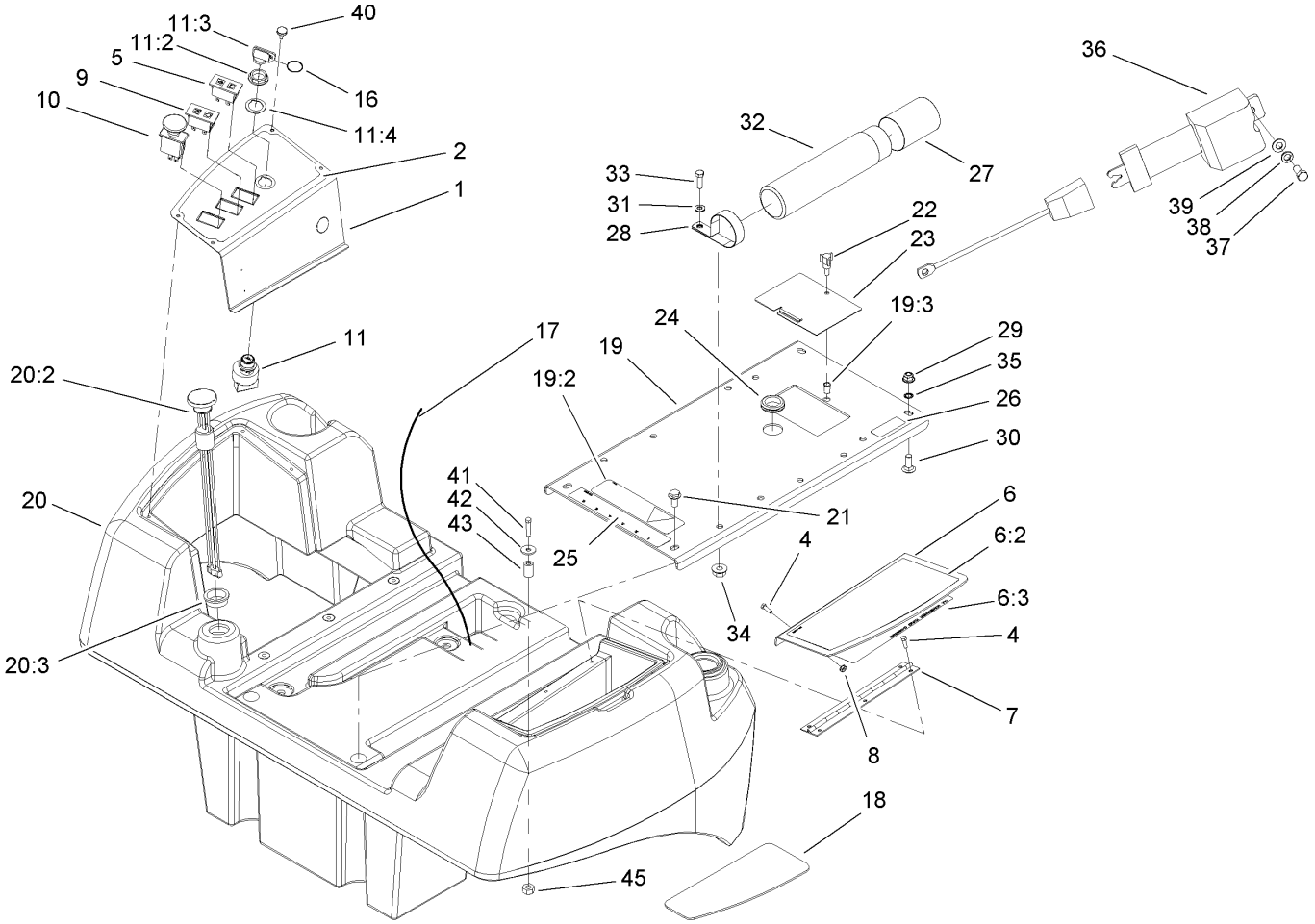


# Fuel Tank and Control Panel Assembly

| Ref | Part No. | Qty. | Description |
|---|---|---|---|
| 1 | 108-2017-03 | 1 | Plate-Panel, Control |
| 2 | 108-2018 | 1 | Decal-Panel, Control |
| 4 | 112-6349 | 6 | Screw-HWH |
| 5 | 100-8070 | 1 | Lamp-Warning |
| 6 | 108-6581 | 1 | Cover ASM |
| 6:2 | 108-6585 | 1 | Decal-Danger |
| 6:3 | 108-6583 | 1 | Decal-Service |
| 7 | 108-2024 | 1 | Hinge |
| 8 | 32149-8 | 3 | Nut-Keps |
| 9 | 100-8071 | 1 | Lamp-Warning |
| 10 | 93-9999 | 1 | Switch-PTO |
| 11 | 106-5269 | 1 | Ignition Switch ASM |
| 11:2 | 108-8660 | 1 | Nut-Mounting |
| 11:3 | 106-5270 | 1 | Key Set-Ignition |
| 11:4 | 108-8659 | 1 | Washer-Backup |
| 16 | 98-9321 | 1 | Ring-Key |
| 17 | 108-8657 | 1 | Harness-Wire, Seat |
| 18 | 108-2013 | 1 | Pad-Rubber |
| 19 | 108-6580 | 1 | Seat Plate ASM |
| 19:2 | 93-7841 | 1 | Decal-Warning |
| 19:3 | 32148-6 | 1 | Insert-Nut |
| 20 | 108-6596 | 1 | Fuel Tank ASM |
| 20:2 | 108-2025 | 1 | Gauge-Fuel |
| 20:3 | 95-8972 | 1 | Grommet |

| Ref | Part No. | Qty. | Description |
|---|---|---|---|
| 21 | 3234-1 | 2 | Screw-HHF |
| 22 | 233-70 | 1 | Knob-Star, Three |
| 23 | 108-2027-03 | 1 | Cover-Bypass |
| 24 | 240-5 | 1 | Grommet |
| 25 | 105-2511 | 1 | Decal-Instructions, Starting |
| 26 | 93-6680 | 1 | Decal-Diesel |
| 27 | 104-7048 | 1 | Cap-Housing |
| 28 | 2412-133 | 2 | R-Clamp |
| 29 | 104-8301 | 2 | Nut-Flange, NI |
| 30 | 3231-2 | 2 | Screw-CARR |
| 31 | 3256-23 | 2 | Washer-Flat |
| 32 | 104-7050 | 1 | Housing-Manual |
| 33 | 322-5 | 2 | Screw-HH |
| 34 | 32128-20 | 2 | Nut-HF |
| 35 | 32151-72 | 2 | Ring-Retaining |
| 36 | 100-4928 | 1 | Belt-Seat |
| 37 | 3212-4 | 2 | Screw-HH |
| 38 | 3253-6 | 2 | Washer-Lock |
| 39 | 3256-25 | 2 | Washer-Flat |
| 40 | 108-8689 | 4 | Screw-Thumb |
| 41 | 321-9 | 1 | Screw-HH |
| 42 | 3256-55 | 1 | Washer-Flat |
| 43 | 108-9688 | 1 | Spacer |
| 45 | 3296-42 | 1 | Nut-Lock, NI |

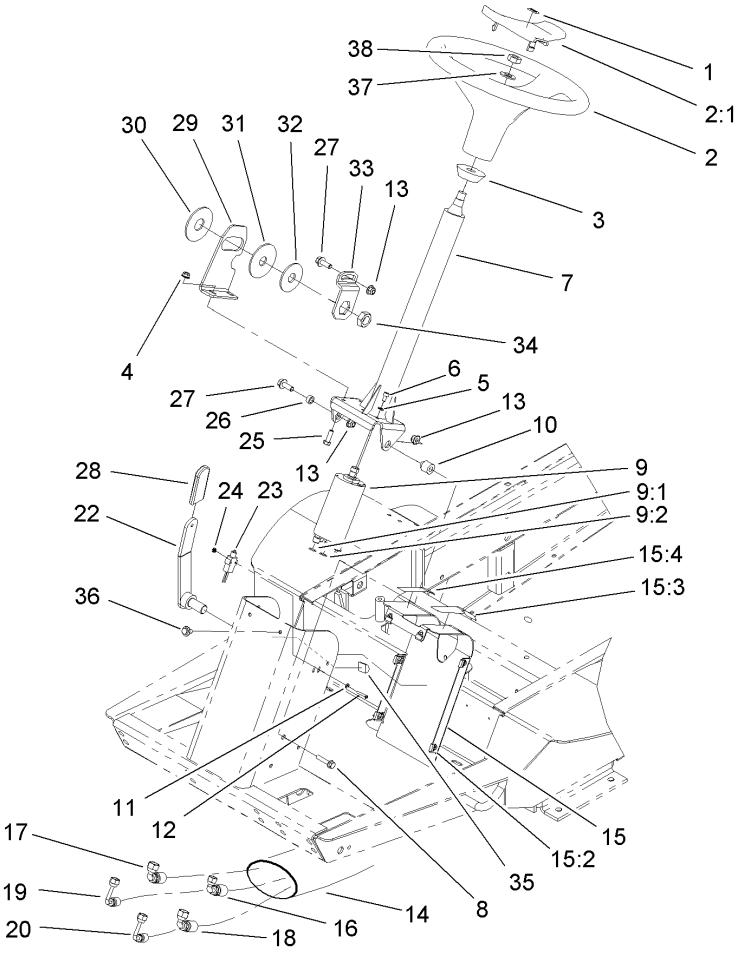


# Power Steering Assembly

| Ref | Part No. | Qty. | Description |
|---|---|---|---|
| 1 | 98-1459 | 1 | Decal |
| 2 | 98-1471 | 1 | Wheel-Steering |
| 2:1 | 98-1468 | 1 | Cover-Wheel, Steering |
| 3 | 93-5429 | 1 | Collar-Foam |
| 4 | 104-8300 | 2 | Nut-Flange, NI |
| 5 | 43-5930 | 4 | Washer-Spring |
| 6 | 99-7202 | 4 | Screw |
| 7 | 106-8098 | 1 | Steering Column ASM |
| 8 | 3234-18 | 1 | Screw-HHF |
| 9 | 108-2077 | 1 | Steering Valve ASM |
| 9:1 | 237-21 | 3 | O-Ring |
| 9:2 | 237-22 | 2 | O-Ring |
| 10 | 105-7166 | 1 | Spacer |
| 11 | 3256-53 | 2 | Washer-Flat |
| 12 | 3250-35 | 2 | Screw-PPH |
| 13 | 104-8301 | 3 | Nut-Flange, NI |
| 14 | 44-8530 | 1 | Protector-Sleeve |
| 15 | 105-7180 | 1 | Tower Panel ASM |
| 15:2 | 105-7170 | 6 | Nut-Retainer |
| 15:3 | 105-7179 | 1 | Decal-Brake, Parking |
| 15:4 | 82-8940 | 1 | Decal-Steering, Tilt |
| 16 | 108-2089 | 1 | Hose ASM |
| 17 | 108-2081 | 1 | Hose ASM |
| 18 | 108-2080 | 1 | Hose ASM |

| Ref | Part No. | Qty. | Description |
|---|---|---|---|
| 19 | 108-2084 | 1 | Hose ASM |
| 20 | 108-2085 | 1 | Hose ASM |
| 22 | 93-1353-03 | 1 | Lever-Steering, Tilt |
| 23 | 99-3410 | 1 | Switch |
| 24 | 32149-6 | 2 | Nut-Keps |
| 25 | 322-5 | 2 | Screw-HH |
| 26 | 80-2960 | 1 | Spacer-Tower |
| 27 | 3234-42 | 2 | Screw-HHF |
| 28 | 21-1880 | 1 | Grip-Handle |
| 29 | 105-7181-03 | 1 | Plate-Pivot |
| 30 | 31-0390 | 1 | Disc-Friction |
| 31 | 82-9010 | 1 | Disc-Friction |
| 32 | 80-2930 | 1 | Washer-Flat |
| 33 | 80-2880 | 1 | Bracket-Tilt |
| 34 | 3218-7 | 1 | Nut-Jam |
| 35 | 105-7188 | 2 | Clamp-Adhesive |
| 36 | 3250-32 | 6 | Screw-PPH |
| 37 | 3256-27 | 1 | Washer-Flat |
| 38 | 3296-33 | 1 | Nut-Lock, NI |

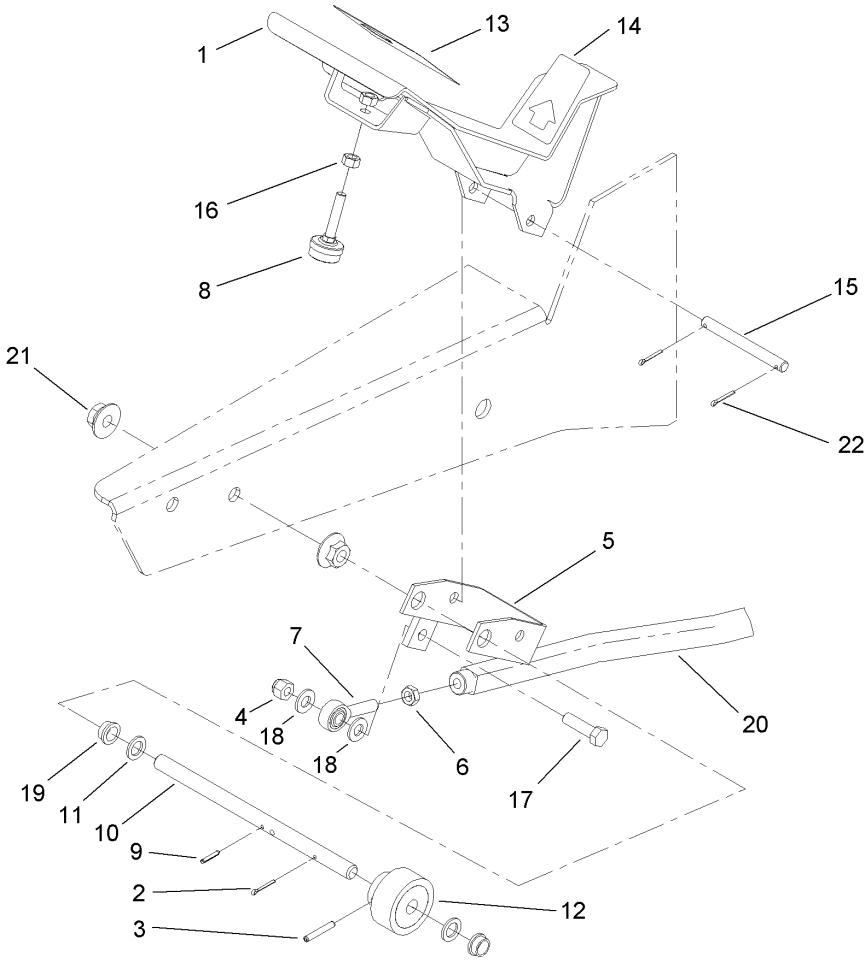


# Traction Pedal Assembly

| Ref | Part No. | Qty. | Description |
|---|---|---|---|
| 1 | 105-7150-03 | 1 | Pedal ASM |
| 2 | 3272-6 | 1 | Pin-Cotter |
| 3 | 32121-6 | 1 | Pin-Roll, Slotted |
| 4 | 3296-39 | 1 | Nut-Lock, NI |
| 5 | 92-8854-03 | 1 | Bracket-Pivot |
| 6 | 3220-3 | 1 | Nut-HJ |
| 7 | 2411-36 | 1 | Bearing-End, Rod |
| 8 | 32141-36 | 1 | Screw-Adjustment, Level |
| 9 | 32121-50 | 1 | Pin-Spring |
| 10 | 92-5534 | 1 | Shaft-Pedal, Traction |
| 11 | 5-7570 | 2 | Washer-Flat |
| 12 | 28-5220 | 1 | Friction Wheel ASM |
| 13 | 94-3307 | 1 | Pad-Pedal, Traction |
| 14 | 94-3308 | 1 | Pad-Pedal, Traction |
| 15 | 92-5537 | 1 | Pin-Pedal, Traction |
| 16 | 3217-6 | 2 | Nut-Hex |
| 17 | 323-29 | 1 | Screw-HH |
| 18 | 3256-24 | 2 | Washer-Flat |
| 19 | 256-156 | 2 | Bushing-Flange |
| 20 | 108-8661-03 | 1 | Traction Rod ASM |
| 21 | 32128-56 | 2 | Nut-HF |
| 22 | 3272-10 | 2 | Pin-Cotter |

| | | | |
|---|---|---|---|
| | | | |

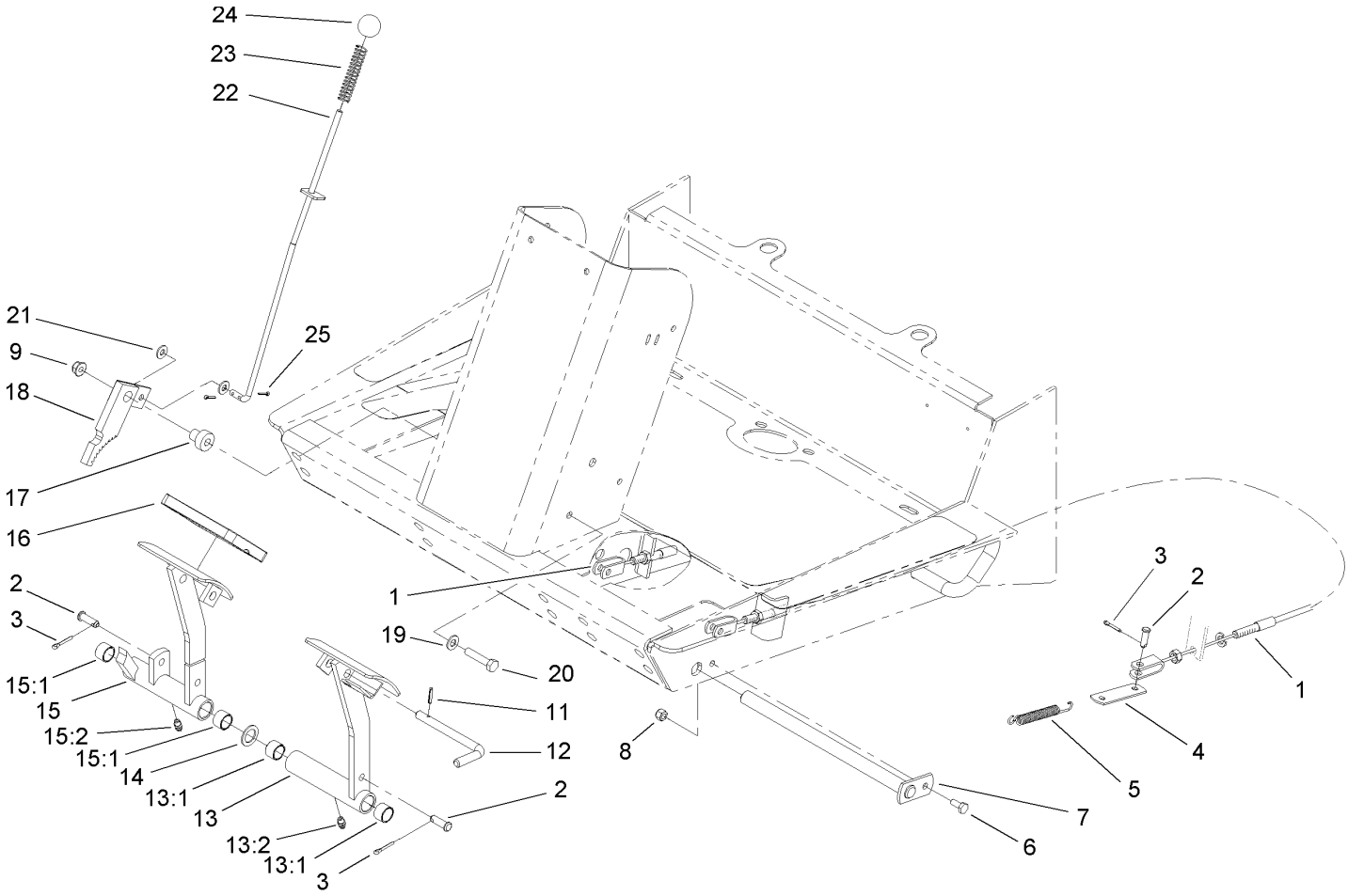


# Brake Pedal Assembly

| Ref | Part No. | Qty. | Description |
|---|---|---|---|
| 1 | 108-6556 | 2 | Cable-Brake |
| 2 | 283-58 | 4 | Pin-Clevis |
| 3 | 3272-10 | 4 | Pin-Cotter |
| 4 | 63-6750 | 2 | Link-Cable, Brake |
| 5 | 3-7243 | 2 | Spring-Extension |
| 6 | 321-4 | 1 | Screw-HH |
| 7 | 63-6210-03 | 1 | Pin-Brake |
| 8 | 3296-42 | 1 | Nut-Lock, NI |
| 9 | 104-8300 | 1 | Nut-Flange, NI |
| 11 | 32121-50 | 1 | Pin-Spring |
| 12 | 63-7880 | 1 | Pin-Latch, Brake |
| 13 | 63-6180 | 1 | Pedal-Brake, LH |
| 13:1 | 256-42 | 2 | Bushing |
| 13:2 | 302-5 | 1 | Fitting-Grease |
| 14 | 3256-69 | 2 | Washer-Flat |
| 15 | 63-6190 | 1 | Pedal-Brake, RH |
| 15:1 | 256-42 | 2 | Bushing |
| 15:2 | 302-5 | 1 | Fitting-Grease |
| 16 | 93-8742 | 2 | Footpad-Brake |
| 17 | 105-7156 | 1 | Spacer |
| 18 | 63-7900-03 | 1 | Rack ASM |
| 19 | 3256-23 | 1 | Washer-Flat |
| 20 | 322-7 | 1 | Screw-HH |
| 21 | 3256-22 | 2 | Washer-Flat |

| Ref | Part No. | Qty. | Description |
|---|---|---|---|
| 22 | 105-7168 | 1 | Rod ASM |
| 23 | 71-8310 | 1 | Spring-Compression |
| 24 | 233-17 | 1 | Knob |
| 25 | 3272-5 | 2 | Pin-Cotter |

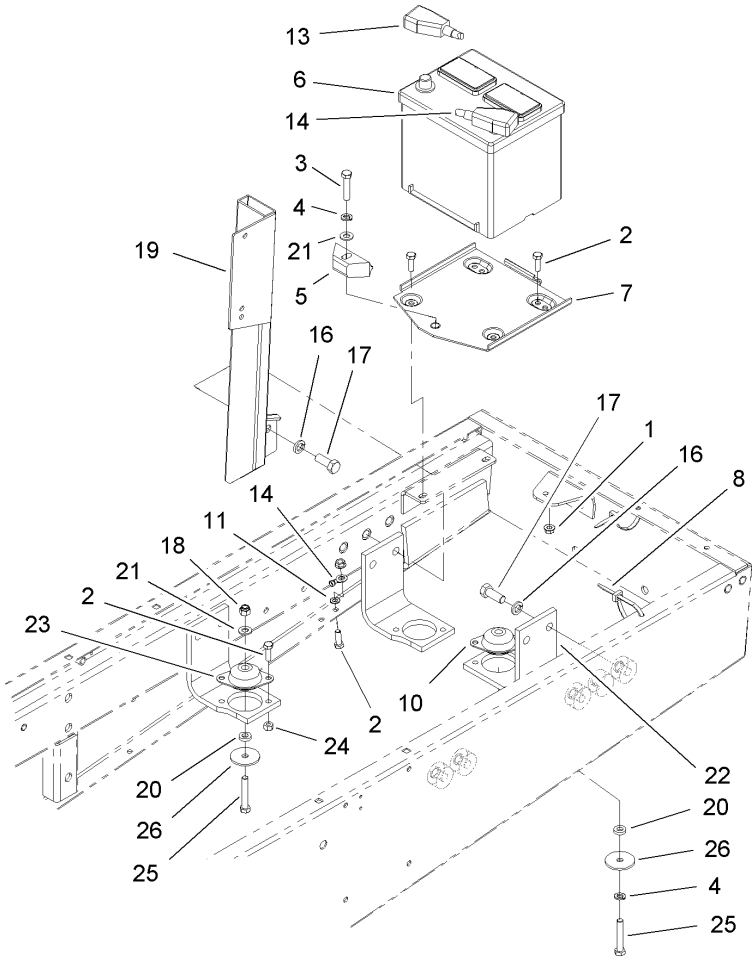


# Battery and Engine Mount Assembly

| Ref | Part No. | Qty. | Description |
|---|---|---|---|
| 1 | 32128-20 | 4 | Nut-HF |
| 2 | 322-5 | 12 | Screw-HH |
| 3 | 323-9 | 1 | Screw-HH |
| 4 | 3253-21 | 2 | Washer-Lock |
| 5 | 66-2490 | 1 | Retainer-Battery |
| 6 | 106-5187 | 1 | Battery |
| 7 | 94-7343 | 1 | Battery Base ASM |
| 8 | 3290-378 | 2 | Tie-Cable |
| 10 | 63-7141 | 1 | Mount-Shock, Engine |
| 11 | 3255-8 | 1 | Washer-Lock |
| 13 | 104-0086 | 1 | Cable-Battery, Positive |
| 14 | 105-0040 | 1 | Cable-Battery, Negative |
| 16 | 3253-7 | 8 | Washer-Lock |
| 17 | 3213-2 | 8 | Screw-HH |
| 18 | 3296-39 | 3 | Nut-Lock, NI |
| 19 | 105-2513-03 | 1 | Air Cleaner Mount ASM |
| 20 | 80-7730 | 4 | Spacer |
| 21 | 3256-24 | 4 | Washer-Flat |
| 22 | 95-6271-03 | 4 | Bracket-Mount, Engine |
| 23 | 63-7142 | 3 | Mount-Shock, Engine |
| 24 | 3296-29 | 8 | Nut-Lock, NI |
| 25 | 323-11 | 4 | Screw-HH |
| 26 | 63-7400 | 4 | Washer-Rebound |

| | | | |
|---|---|---|---|
| | | | |

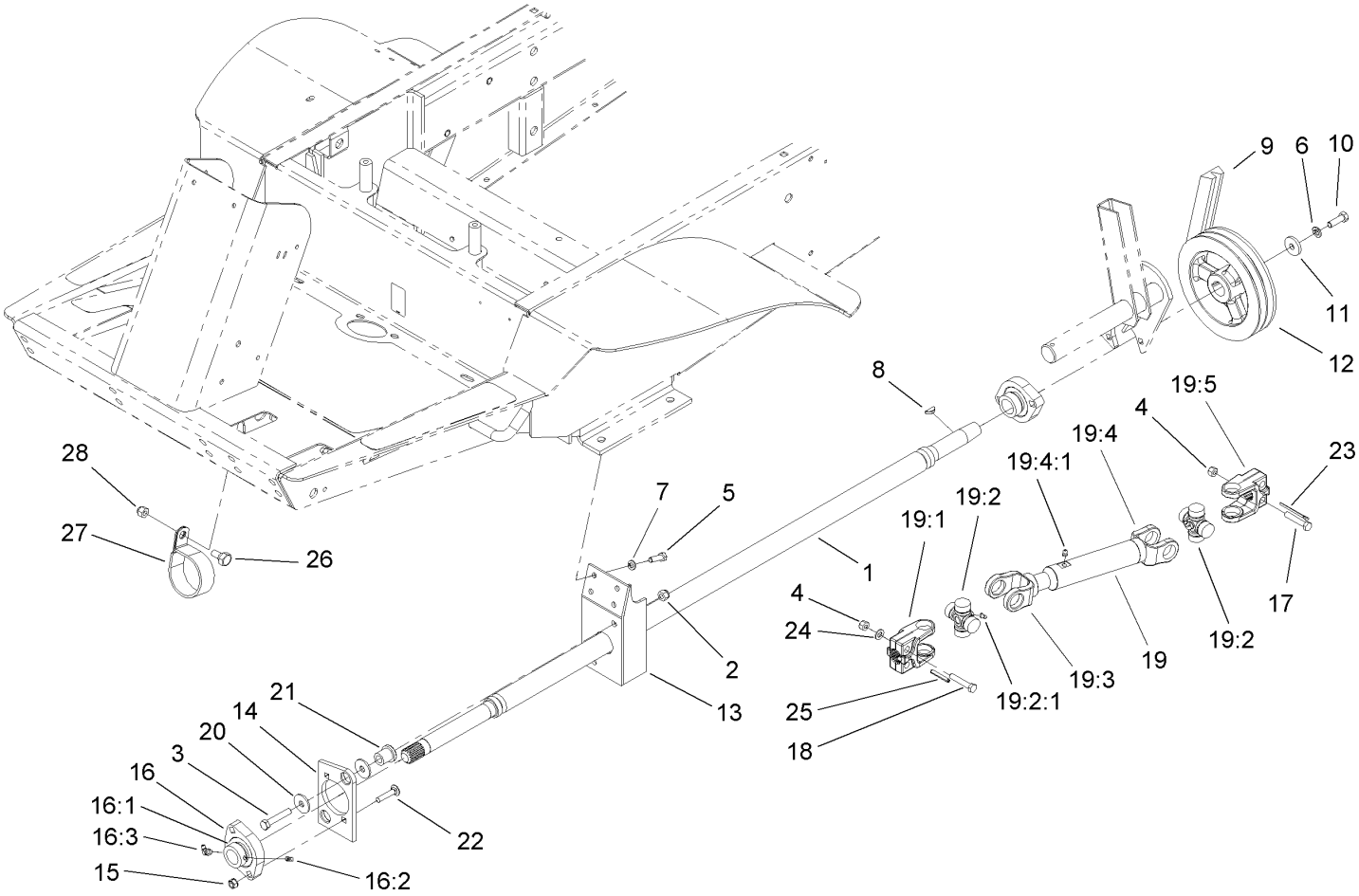


# Power-Take-Off and Shaft Assembly

| Ref | Part No. | Qty. | Description |
|---|---|---|---|
| 1 | 92-8855-03 | 1 | Shaft-PTO |
| 2 | 3296-39 | 2 | Nut-Lock, NI |
| 3 | 323-10 | 2 | Screw-HH |
| 4 | 3296-29 | 5 | Nut-Lock, NI |
| 5 | 322-5 | 4 | Screw-HH |
| 6 | 3253-21 | 1 | Washer-Lock |
| 7 | 3253-4 | 4 | Washer-Lock |
| 8 | 3257-5 | 1 | Key-Woodruff |
| 9 | 63-6240 | 1 | V-Belt |
| 10 | 323-18 | 1 | Screw-HH |
| 11 | 29-4730 | 1 | Washer-Flat |
| 12 | 43-5320-03 | 1 | Pulley-PTO |
| 13 | 92-8751-03 | 1 | PTO Bearing Bracket ASM |
| 14 | 84-7580 | 1 | Plate-Support, Bushing |
| 15 | 32149-1 | 2 | Nut-Keps |
| 16 | 92-8799 | 1 | Bearing-Flange |
| 16:1 | 251-77 | 1 | Collar-Lock, Bearing |
| 16:2 | 3245-35 | 1 | Screw-Set |
| 16:3 | 302-40 | 1 | Fitting-Grease |
| 17 | 322-9 | 4 | Screw-HH |
| 18 | 322-14 | 1 | Screw-HH |
| 19 | 108-1366 | 1 | PTO Drive Shaft ASM |
| 19:1 | 54-9040 | 1 | Yoke-End |
| 19:2 | 54-9180 | 2 | U-Joint Kit |

| Ref | Part No. | Qty. | Description |
|---|---|---|---|
| 19:2:1 | 62-3820 | 1 | Fitting-Grease |
| 19:3 | 108-6550 | 1 | Shaft-Yoke, Slip |
| 19:4 | 108-6551 | 1 | Tube-Yoke, Slip |
| 19:4:1 | 302-58 | 1 | Fitting-Straight |
| 19:5 | 54-9090 | 1 | Yoke-End |
| 20 | 63-8410 | 4 | Washer |
| 21 | 63-9750 | 2 | Mount |
| 22 | 3230-4 | 2 | Screw-CARR |
| 23 | 3272-15 | 1 | Pin-Cotter |
| 24 | 3256-23 | 1 | Washer-Flat |
| 25 | 32121-34 | 1 | Pin-Roll |
| 26 | 46-3380 | 1 | Bolt-Shoulder |
| 27 | 2412-102 | 1 | Clamp-R |
| 28 | 3296-39 | 1 | Nut-Lock, NI |

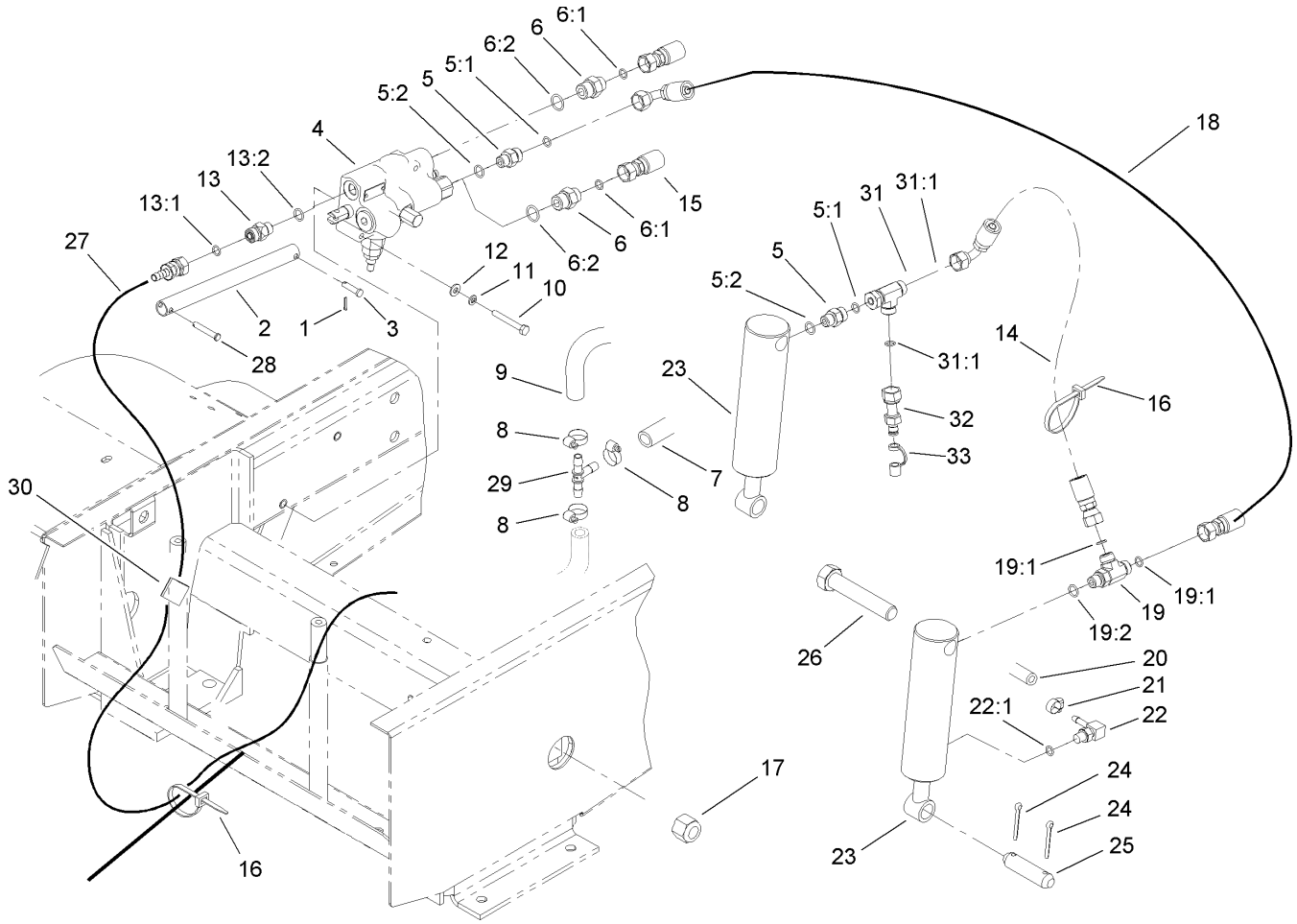


# Hydraulic Cylinder and Lift Arm Assembly

| Ref | Part No. | Qty. | Description |
|---|---|---|---|
| 1 | 3272-5 | 2 | Pin-Cotter |
| 2 | 108-2021-03 | 1 | Tube-Link |
| 3 | 283-26 | 1 | Pin |
| 4 | 108-2022 | 1 | Control Valve ASM |
| ❶4:1 | 108-8690 | 1 | Cartridge-Transfer, Weight |
| ❶4:2 | 108-8691 | 1 | Pilot Check Kit |
| ❶4:3 | 108-8692 | 1 | Spring Center Kit |
| ❶4:4 | 108-8693 | 1 | Seal Kit |
| 5 | 340-2 | 2 | Fitting-HYD, Straight |
| 5:1 | 237-22 | 1 | O-Ring |
| 5:2 | 237-42 | 1 | O-Ring |
| 6 | 340-3 | 2 | Adapter |
| 6:1 | 237-22 | 1 | O-Ring |
| 6:2 | 237-79 | 1 | O-Ring |
| 7 | 100-5641 | 1 | Hose ASM |
| 8 | 2412-36 | 3 | Clamp-Hose |
| 9 | 100-5649 | 1 | Hose |
| 10 | 321-18 | 2 | Screw-HH |
| 11 | 3253-3 | 2 | Washer-Lock |
| 12 | 3256-22 | 2 | Washer-Flat |
| 13 | 108-2093 | 1 | Valve-Check |
| 13:1 | 237-22 | 1 | O-Ring |
| 13:2 | 237-42 | 1 | O-Ring |
| 14 | 108-2083 | 1 | Hose ASM |

| Ref | Part No. | Qty. | Description |
|---|---|---|---|
| 15 | 108-2088 | 1 | Hose ASM |
| 16 | 3290-378 | 2 | Tie-Cable |
| 17 | 3296-51 | 2 | Nut-Lock, NI |
| 18 | 108-2082 | 1 | Hose ASM |
| 19 | 340-86 | 1 | Fitting-HYD, Tee |
| 19:1 | 237-22 | 2 | O-Ring |
| 19:2 | 237-42 | 1 | O-Ring |
| 20 | 92-5082 | 2 | Hose-HYD |
| 21 | 2412-108 | 2 | Clamp-Worm |
| 22 | 304-99 | 2 | Stem-Hose |
| 22:1 | 237-78 | 1 | O-Ring |
| 23 | 63-6630 | 2 | Cylinder-HYD |
| 24 | 3272-23 | 4 | Pin-Cotter |
| 25 | 27-4240 | 2 | Pin-Cylinder |
| 26 | 328-7 | 2 | Screw-HH |
| 27 | 108-2090 | 1 | Hose ASM |
| 28 | 283-66 | 1 | Pin-Clevis |
| 29 | 354-107 | 1 | Fitting-HYD, Tee |
| 30 | 105-7188 | 1 | Clamp-Adhesive |
| 31 | 340-115 | 1 | Fitting-Tee |
| 31:1 | 237-22 | 2 | O-Ring |
| 32 | 86-5480 | 1 | Nipple-Test |
| 33 | 354-79 | 1 | Cap-Dust |

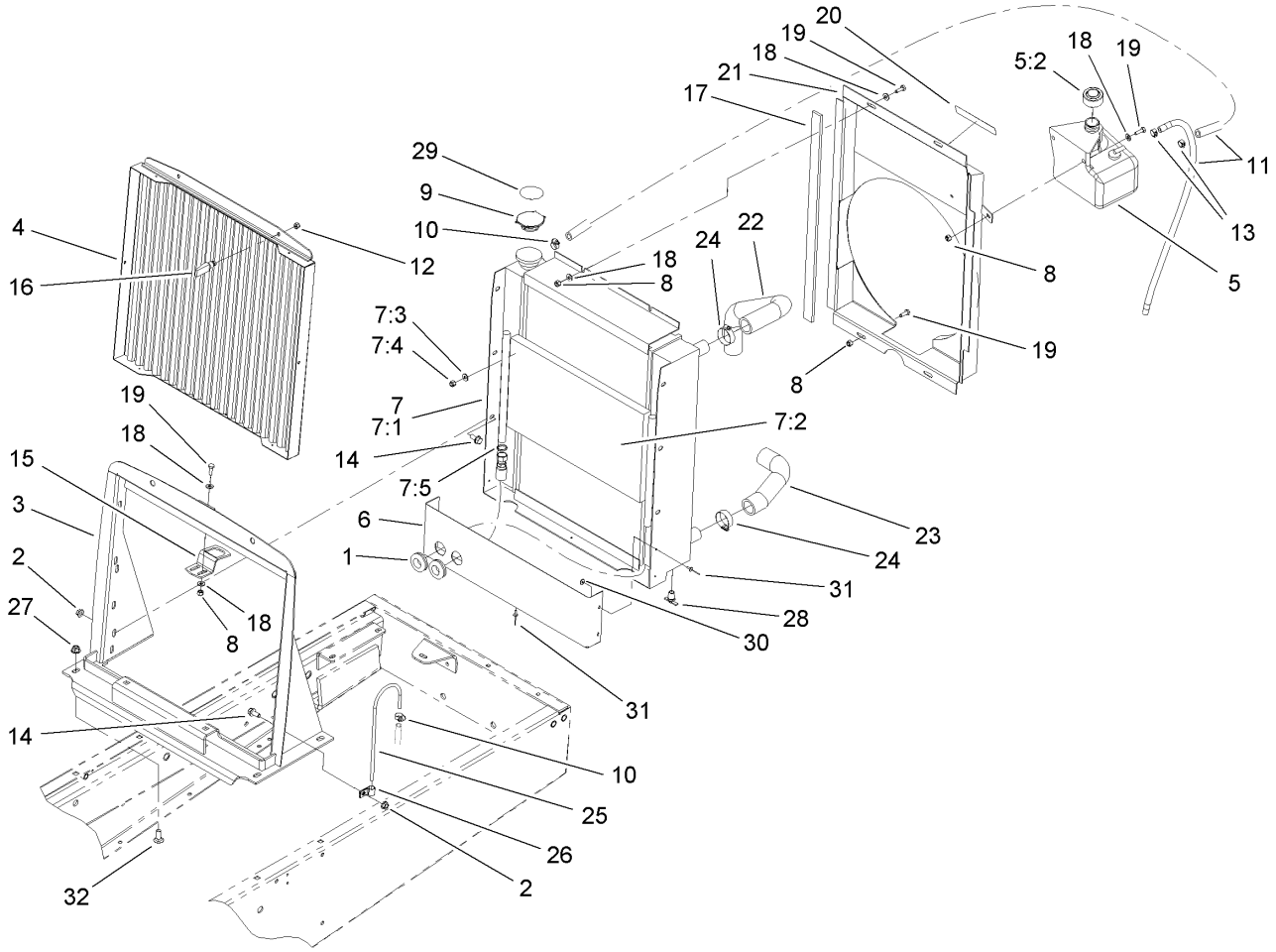


# Radiator Assembly

| Ref | Part No. | Qty. | Description |
|---|---|---|---|
| 1 | 240-4 | 2 | Grommet-Rubber |
| 2 | 32128-20 | 6 | Nut-HF |
| 3 | 110-9668-03 | 1 | Radiator Support ASM |
| 4 | 108-2062-03 | 1 | Screen ASM |
| 5 | 93-5975 | 1 | Coolant Reservior ASM |
| 5:2 | 93-5960 | 1 | Cap-Reservoir |
| 6 | 110-9663-03 | 1 | Shield-Radiator, Bottom |
| ❷7 | | 1 | Radiator / Oil Cooler ASM |
| 7:1 | 105-4289 | 1 | Radiator |
| 7:2 | 105-4290 | 1 | Cooler-Oil |
| 7:3 | 3253-4 | 4 | Washer-Lock |
| 7:4 | 3217-6 | 4 | Nut-Hex |
| 7:5 | 237-22 | 2 | O-Ring |
| 8 | 3296-42 | 8 | Nut-Lock, NI |
| 9 | 66-3240 | 1 | Cap-Radiator |
| 10 | 2412-108 | 2 | Clamp-Worm |
| 11 | 110-4103 | 2 | Hose-Fuel |
| 12 | 1-804254 | 2 | Nut |
| 13 | 2412-98 | 2 | Clamp |
| 14 | 3234-5 | 6 | Screw-HHF |
| 15 | 98-9316 | 1 | Latch-Hood |
| 16 | 74-5950 | 2 | Latch-Swell |
| 17 | 108-9683 | 2 | Strip-Foam |
| 18 | 3256-22 | 14 | Washer-Flat |

| Ref | Part No. | Qty. | Description |
|---|---|---|---|
| 19 | 321-4 | 8 | Screw-HH |
| 20 | 93-7272 | 1 | Decal-Warning |
| 21 | 108-9678-03 | 1 | Fan Shroud ASM |
| 22 | 104-3443 | 1 | Hose-Radiator, Upper |
| 23 | 104-3442 | 1 | Hose-Radiator, Lower |
| 24 | 2412-34 | 4 | Clamp-Hose |
| 25 | 66-3180 | 1 | Tube-Vent |
| 26 | 2412-103 | 2 | Clamp |
| 27 | 104-8301 | 4 | Nut-Flange, NI |
| 28 | 304-46 | 1 | Draincock |
| 29 | 106-5976 | 1 | Decal-Warning |
| 30 | 3269-10 | 2 | Washer-Back |
| 31 | 3269-13 | 5 | Rivet-Pop |
| 32 | 3231-2 | 4 | Screw-CARR |

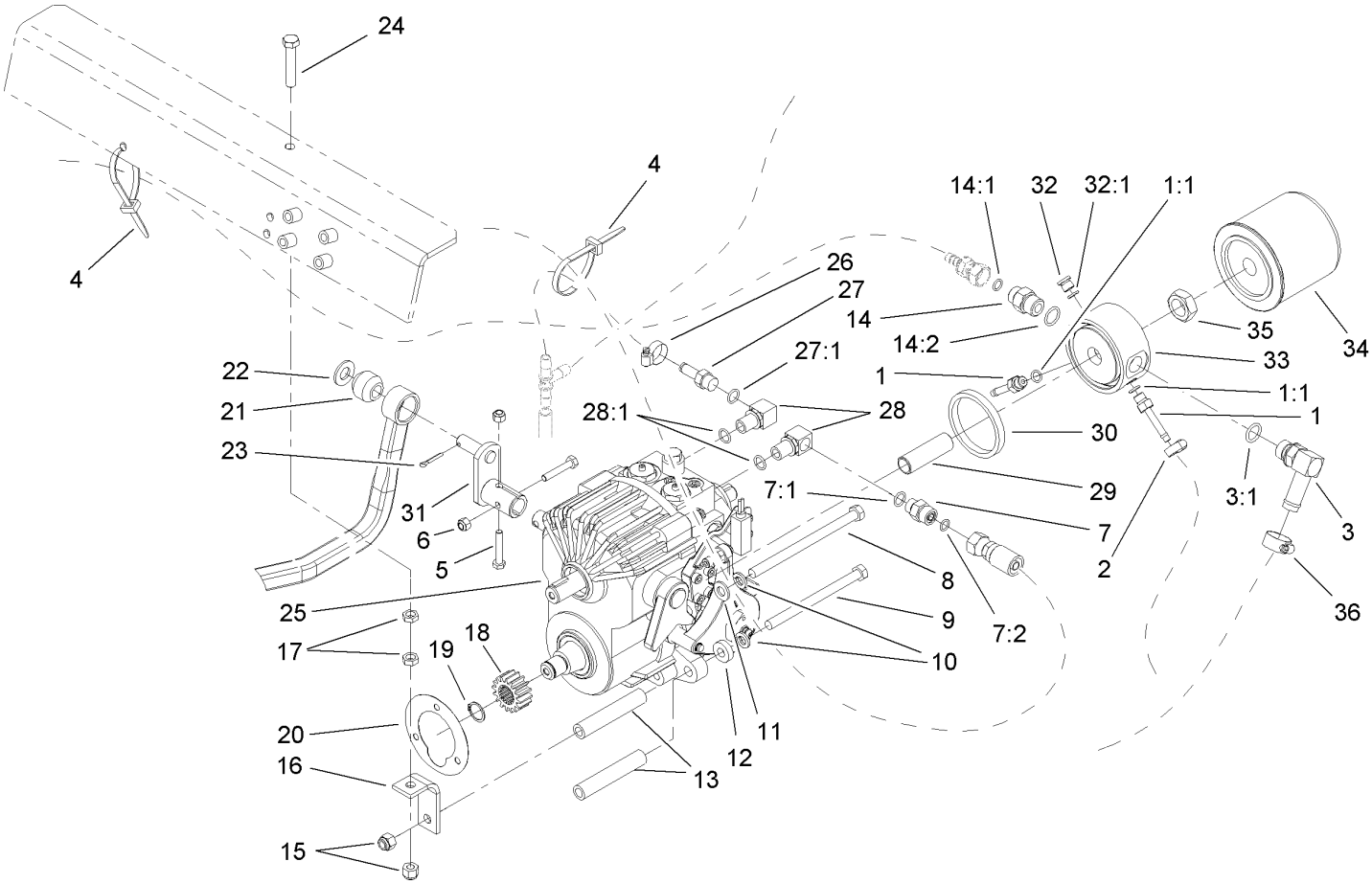


# Transmission Installation Assembly

| Ref | Part No. | Qty. | Description |
|---|---|---|---|
| 1 | 92-5512 | 2 | Fitting-Hose, Barbed |
| 1:1 | 237-78 | 1 | O-Ring |
| 2 | 2412-108 | 2 | Clamp-Worm |
| 3 | 92-5086 | 1 | Fitting-Elbow, 90 DEG |
| 3:1 | 237-79 | 1 | O-Ring |
| 4 | 3290-378 | 2 | Tie-Cable |
| 5 | 321-9 | 2 | Screw-HH |
| 6 | 3296-42 | 2 | Nut-Lock, NI |
| 7 | 82-8530 | 1 | Fitting-Straight |
| 7:1 | 237-42 | 1 | O-Ring |
| 7:2 | 237-22 | 1 | O-Ring |
| 8 | 27-9620 | 1 | Screw-HH |
| 9 | 323-39 | 3 | Screw-HH |
| 10 | 3253-21 | 4 | Washer-Lock |
| 11 | 3256-24 | 1 | Washer-Flat |
| 12 | 5-0652 | 1 | Spacer |
| 13 | 27-3680 | 4 | Spacer-Mounting |
| 14 | 340-3 | 1 | Adapter |
| 14:1 | 237-22 | 1 | O-Ring |
| 14:2 | 237-79 | 1 | O-Ring |
| 15 | 3296-39 | 2 | Nut-Lock, NI |
| 16 | 63-7170 | 1 | Anchor-Transmission |
| 17 | 3218-3 | 2 | Nut-Jam |
| 18 | 86-7220 | 1 | Gear-Pinion |

| Ref | Part No. | Qty. | Description |
|---|---|---|---|
| 19 | 32120-72 | 1 | Ring-Snap |
| 20 | 27-3690 | 1 | Gasket-Transmission |
| 21 | 23-2270 | 1 | Bushing-Rubber |
| 22 | 3256-26 | 1 | Washer-Flat |
| 23 | 3272-10 | 1 | Pin-Cotter |
| 24 | 67-1900 | 1 | Screw-HH |
| 25 | 108-1355 | 1 | Transmission ASM |
| 26 | 2412-36 | 1 | Clamp-Hose |
| 27 | 353-979 | 1 | Fitting-Straight |
| 27:1 | 237-42 | 1 | O-Ring |
| 28 | 66-3110 | 2 | Fitting-HYD, 90 DEG |
| 28:1 | 237-42 | 1 | O-Ring |
| 29 | 92-5085 | 1 | Union-Filter |
| 30 | 92-5087 | 1 | Seal-Adaptor, Filter |
| 31 | 108-2036-03 | 1 | Pump Lever ASM |
| 32 | 353-990 | 1 | Plug |
| 32:1 | 237-78 | 1 | O-Ring |
| 33 | 92-5076 | 1 | Adapter-Filter |
| 34 | 23-2300 | 1 | Filter-Oil, Transmission |
| 35 | 3220-7 | 1 | Nut-Jam |
| 36 | 2412-119 | 1 | Clamp-Worm |

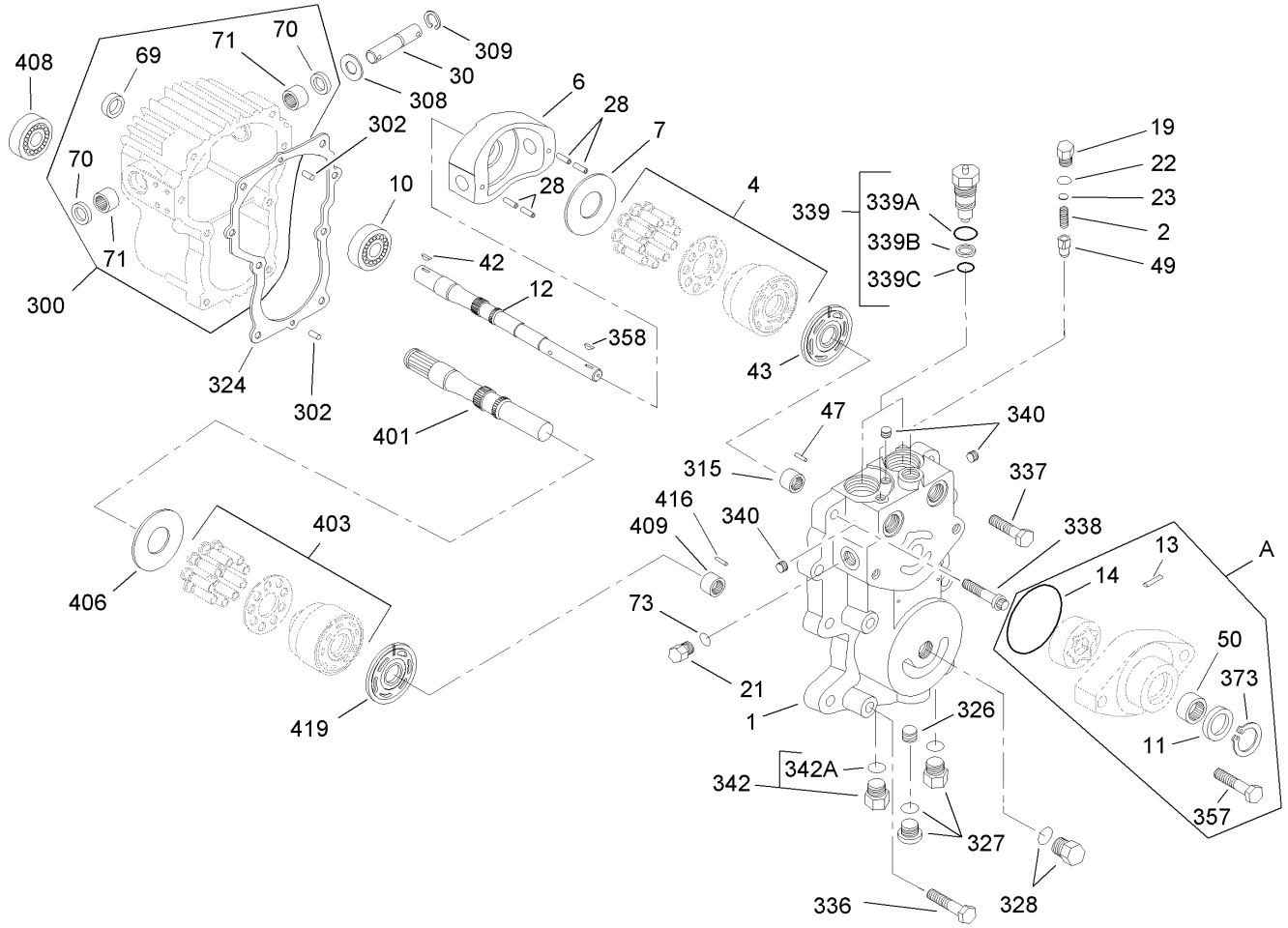


# Center Section Assembly
# Transmission Assembly No. 108-1355

| Ref | Part No. | Qty. | Description |
|---|---|---|---|
| A | 38-2670 | 1 | Charge Pump Kit |
| 1 | 92-5716 | 1 | Section-Center |
| 2 | 46-7310 | 1 | Spring |
| 4 | 48-1800 | 1 | Cylinder Block Kit |
| 6 | 25-2450 | 1 | Plate-Swash, Variable |
| 7 | 25-2380 | 1 | Plate-Thrust |
| 10 | 251-8 | 1 | Bearing-Ball |
| 11 | 94-2975 | 1 | Seal-Shaft |
| 12 | 28-3640 | 1 | Shaft-Pump |
| 13 | 38-2680 | 1 | Pin |
| 14 | 28-3520 | 1 | O-Ring |
| 19 | 25-2460 | 1 | Plug-HH |
| 21 | 25-2460 | 1 | Plug-HH |
| 22 | 28-3400 | 1 | O-Ring |
| 23 | 25-2470 | 1 | Pack-Shim |
| 28 | 83-3880 | 4 | Pin-Spring |
| 30 | 28-3670 | 1 | Shaft-Trunnion |
| 42 | 3257-5 | 1 | Key-Woodruff |
| 43 | 110-3051 | 1 | Plate-Valve |
| 47 | 25-2430 | 1 | Pin-Dowel |
| 49 | 67-8070 | 1 | Cone-Relief, Charge |
| 50 | 28-3480 | 1 | Bearing |
| 69 | 93-4133 | 1 | Seal-Lip |
| 70 | 103461 | 2 | Seal |

| Ref | Part No. | Qty. | Description |
|---|---|---|---|
| 71 | 252-82 | 2 | Bearing-Needle |
| 73 | 28-3400 | 1 | O-Ring |
| 300 | 110-3052 | 1 | Housing ASM |
| 302 | 353-599 | 2 | Pin-Dowel |
| 308 | 25-2510 | 1 | Washer-Flat |
| 309 | 32151-46 | 1 | Ring-Retaining |
| 315 | 25-3300 | 1 | Bearing-Needle |
| 324 | 28-3340 | 1 | Gasket |
| 326 | 107-4370 | 1 | Plug-Expansion |
| 327 | 67-9090 | 1 | Plug ASM |
| 328 | 28-3440 | 1 | Plug-Threaded |
| 336 | 323-10 | 4 | Screw-HH |
| 337 | 75-0110 | 2 | Capscrew-HH |
| 338 | 28-3530 | 2 | Capscrew |
| 339 | 49-7830 | 2 | Check Valve Kit |
| 340 | 75-0160 | 4 | Plug-Pipe |
| 342 | 28-3440 | 2 | Plug-Threaded |
| 357 | 92-1773 | 2 | Screw-HHF |
| 358 | 3257-5 | 1 | Key-Woodruff |
| 373 | 94-2976 | 1 | Ring-Retaining |
| 401 | 49-8200 | 1 | Shaft-Motor |
| 403 | 48-1800 | 1 | Cylinder Block Kit |
| 406 | 25-2380 | 1 | Plate-Thrust |
| 408 | 28-3300 | 1 | Bearing-Roller |

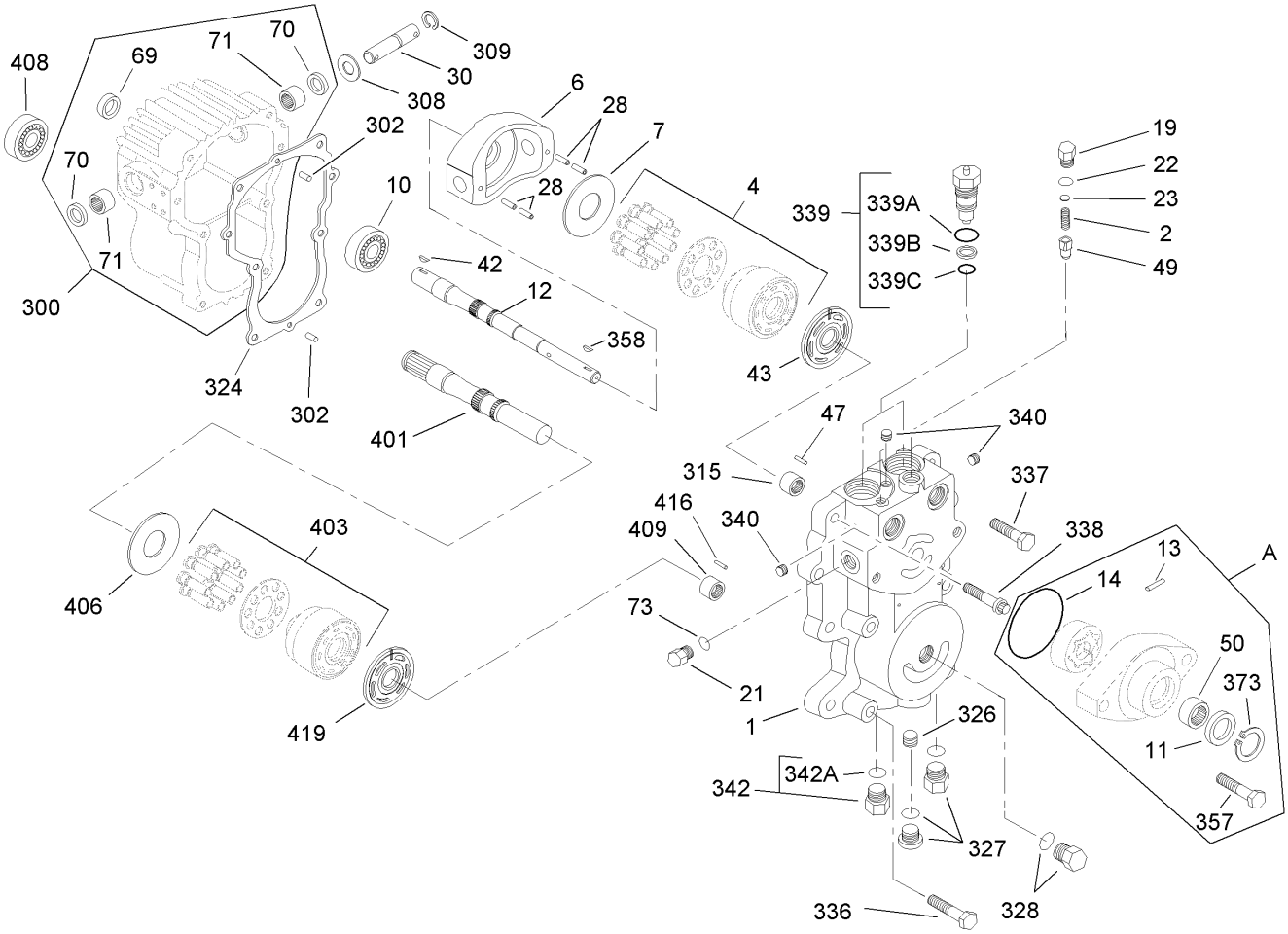


# Center Section Assembly
# Transmission Assembly No. 108-1355 (continued)

| Ref | Part No. | Qty. | Description |
|---|---|---|---|
| 409 | 25-3300 | 1 | Bearing-Needle |
| 416 | 25-2430 | 1 | Pin-Dowel |
| 419 | 28-3380 | 1 | Plate-Valve, Motor |
| 339A | 28-3570 | 2 | O-Ring |
| 339B | 28-3580 | 2 | Ring-Back Up |
| 339C | 28-3590 | 2 | O-Ring |
| 342A | 75-0240 | 2 | O-Ring |

| | | | |
|---|---|---|---|
| | | | |

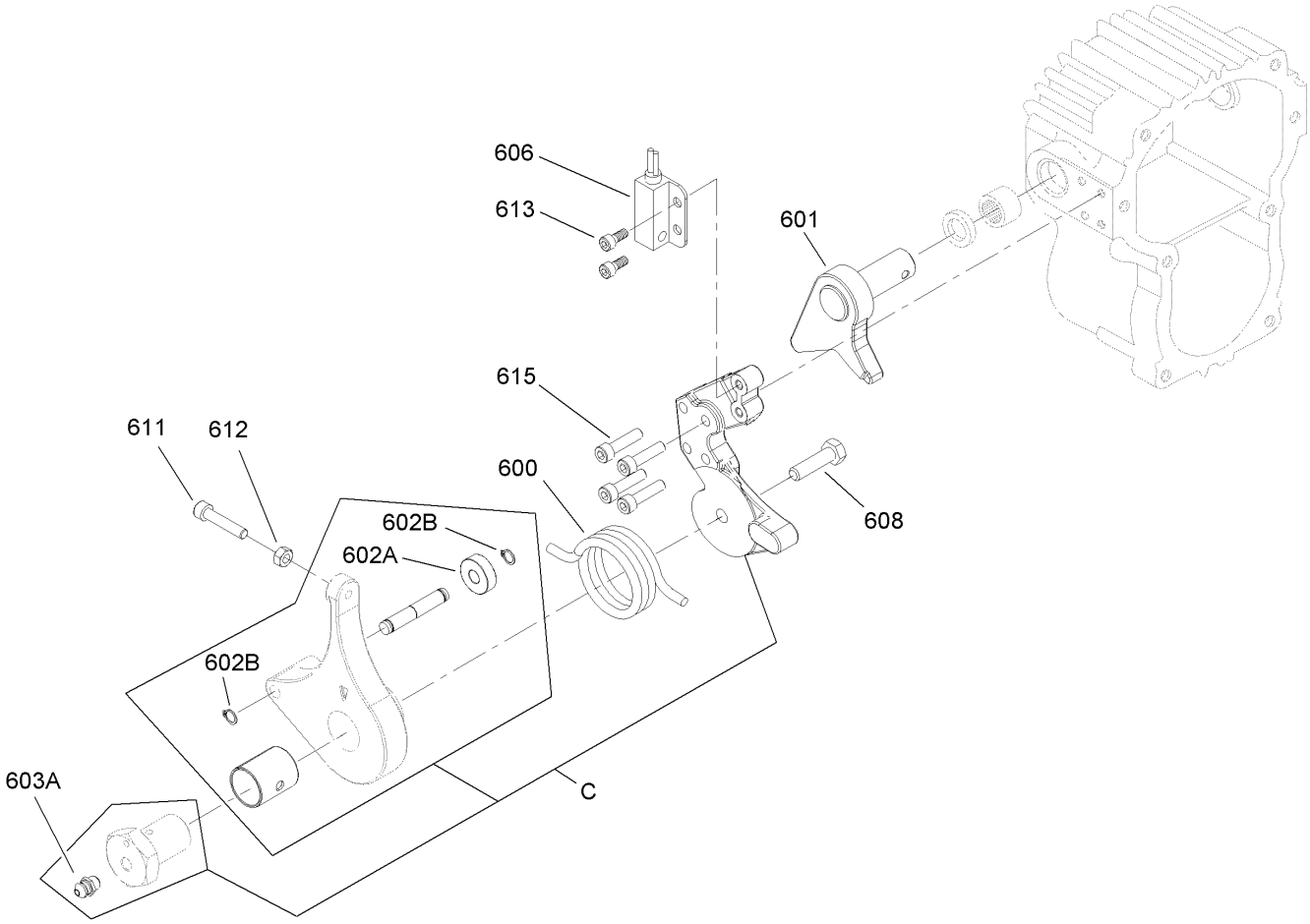


# Neutral Return Arm Assembly
# Transmission Assembly No. 108-1355

| Ref | Part No. | Qty. | Description |
|---|---|---|---|
| C | 110-5685 | 1 | Neutral Return ASM |
| 600 | 110-3053 | 1 | Spring-Return, Neutral |
| 601 | 110-3054 | 1 | Cam-Trunnion |
| 606 | 100-1270 | 1 | Switch-Proximity |
| 608 | 33114-030 | 1 | Screw-HH |
| 611 | 110-3060 | 1 | Screw-HSH |
| 612 | 33013-00 | 1 | Nut-Hex |
| 613 | 110-3061 | 2 | Screw-HSH |
| 615 | 48-7850 | 4 | Capscrew |
| 602A | 251-259 | 1 | Bearing-Ball |
| 602B | 110-3056 | 2 | Ring-Retaining |
| 603A | 110-3058 | 1 | Fitting-Lube |

| | | | |
|---|---|---|---|
| | | | |

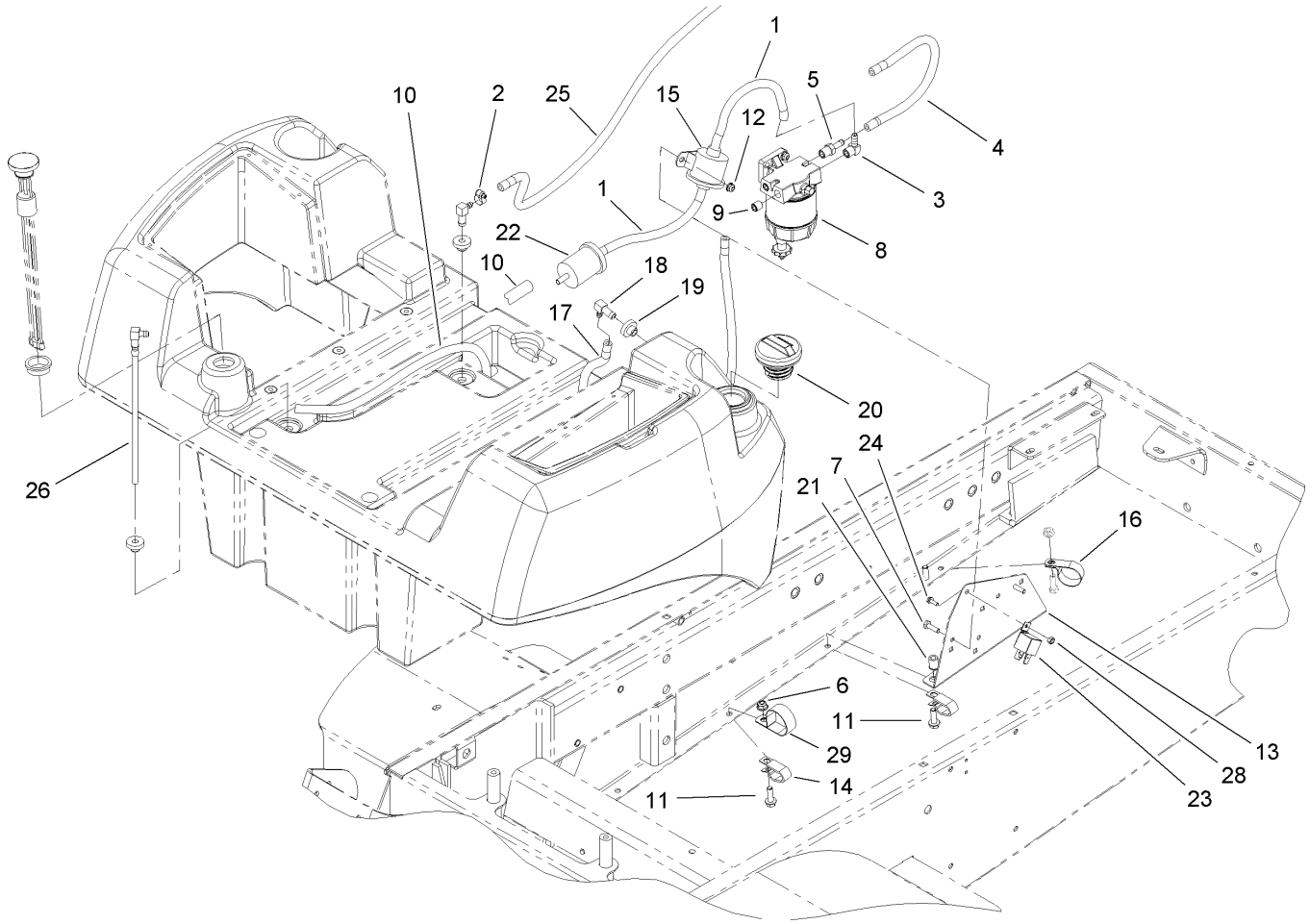


# Fuel Delivery System Assembly

| Ref | Part No. | Qty. | Description |
|---|---|---|---|
| 1 | 110-4105 | 2 | Hose-Fuel |
| 2 | 2412-108 | 11 | Clamp-Worm |
| 3 | 353-781 | 1 | Fitting-Elbow |
| 4 | 110-4113 | 1 | Hose-Fuel |
| 5 | 353-783 | 1 | Fitting-Straight |
| 6 | 104-8300 | 1 | Nut-Flange, NI |
| 7 | 321-5 | 4 | Screw-HH |
| 8 | 98-9305 | 1 | Water / Fuel Filter ASM |
| 9 | 285-22 | 2 | Plug-Pipe |
| 10 | 110-9662 | 1 | Hose-Fuel |
| 11 | 3234-17 | 3 | Screw-HHF |
| 12 | 104-7201 | 4 | Nut-HF |
| 13 | 108-2078-03 | 1 | Bracket-Support |
| 14 | 92-5753 | 2 | Clamp-Hose |
| 15 | 107-0122 | 1 | Pump-Fuel, Electric |
| 16 | 2412-74 | 1 | R-Clamp |
| 17 | 109-0273 | 1 | Hose-Fuel |
| 18 | 104-5228 | 2 | Fitting-Elbow |
| 19 | 46-6560 | 3 | Bushing |
| 20 | 93-3102 | 1 | Cap-Fuel |
| 21 | 32148-7 | 2 | Nut-Insert |
| 22 | 98-7612 | 1 | Filter-Fuel |
| 23 | 99-7435 | 1 | Relay-Power |
| 24 | 32105-2 | 1 | Screw-SHWH |

| Ref | Part No. | Qty. | Description |
|---|---|---|---|
| 25 | 108-9698 | 1 | Hose-Fuel |
| 26 | 110-9689 | 1 | Standpipe |
| 28 | 3296-2 | 1 | Nut-Lock |
| 29 | 2412-147 | 1 | Clamp |

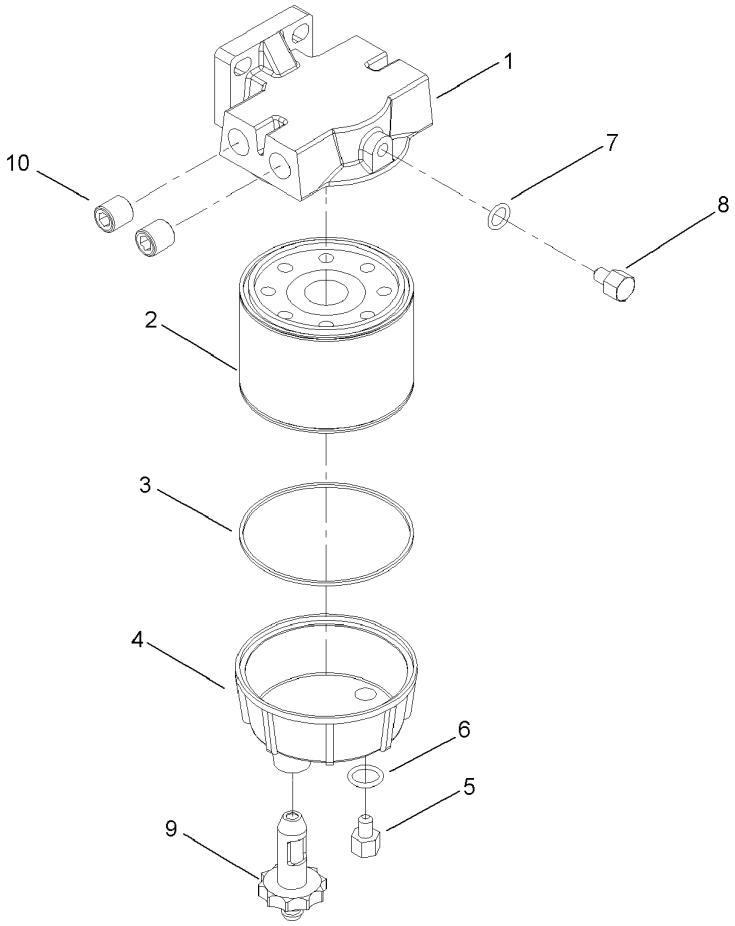


# Water and Fuel Filter Assembly No. 98-9305

| Ref | Part No. | Qty. | Description |
|---|---|---|---|
| 1 | 98-9772 | 1 | Head-Filter |
| 2 | 98-9764 | 1 | Element |
| 3 | 98-9774 | 1 | O-Ring |
| 4 | 98-9775 | 1 | Base-Filter |
| 5 | 98-9773 | 1 | Plug-Base, Filter |
| 6 | 237-42 | 1 | O-Ring |
| 7 | 237-78 | 1 | O-Ring |
| 8 | 98-9776 | 1 | Plug-Head, Filter |
| 9 | 98-9777 | 1 | Drain Valve ASM |
| 10 | 285-22 | 2 | Plug-Pipe |

| | | | |
|---|---|---|---|
| | | | |

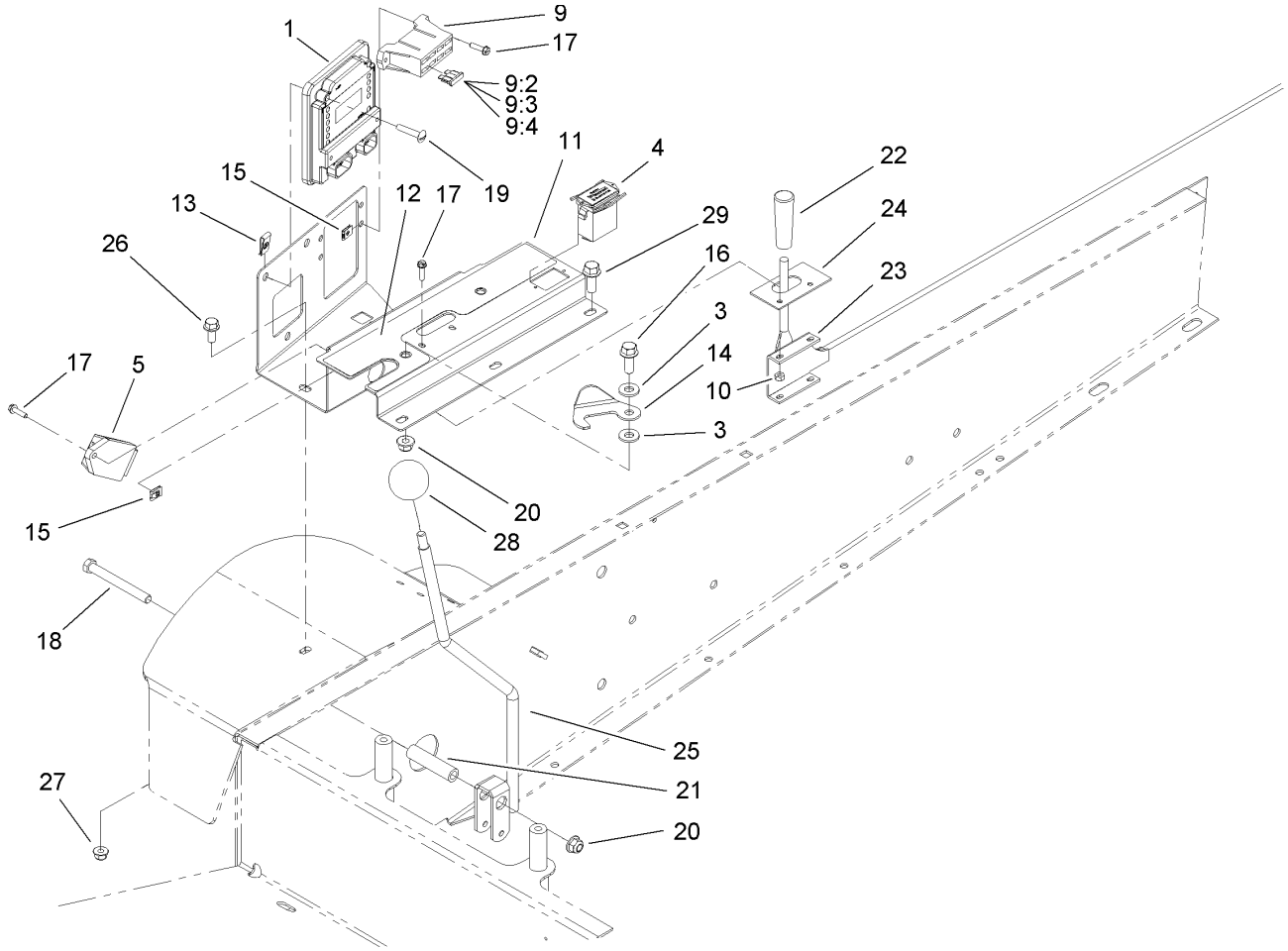


# Lower Control Panel Assembly

| Ref | Part No. | Qty. | Description |
|---|---|---|---|
| 1 | 106-9277 | 1 | Module-Control, Standard |
| 3 | 66-2920 | 2 | Washer-Friction |
| 4 | 1-513374 | 1 | Meter-Hour |
| 5 | 98-7611 | 1 | Controller-Glow |
| 9 | 110-1686 | 1 | Harness-Wire, Main |
| 9:2 | 94-6710 | 1 | Fuse-Blade, 2 Amp |
| 9:3 | 218-578 | 1 | Fuse-10 Amp |
| 9:4 | 109355 | 1 | Fuse-15 Amp |
| 10 | 3296-2 | 2 | Nut-Lock |
| 11 | 108-2030-03 | 1 | Cover-Lower |
| 12 | 108-2031 | 1 | Decal-Panel, Lower |
| 13 | 3290-199 | 3 | Nut-Speed |
| 14 | 108-2032 | 1 | Latch-Lever |
| 15 | 107-1013 | 8 | Nut-Speed, U-Type |
| 16 | 3234-11 | 1 | Screw-HHF |
| 17 | 32105-13 | 5 | Screw-SHH |
| 18 | 323-15 | 1 | Screw-HH |
| 19 | 3258-19 | 3 | Screw |
| 20 | 104-8301 | 2 | Nut-Flange, NI |
| 21 | 84-2350 | 1 | Spacer-Long |
| 22 | 233-39 | 1 | Knob-Control |
| 23 | 108-2033 | 1 | Cable-Throttle, Diesel |
| 24 | 108-2034-03 | 1 | Plate-Throttle |
| 25 | 108-2035-03 | 1 | Lift Lever ASM |

| Ref | Part No. | Qty. | Description |
|---|---|---|---|
| 26 | 3234-5 | 1 | Screw-HHF |
| 27 | 104-8300 | 1 | Nut-Flange, NI |
| 28 | 233-21 | 1 | Knob |
| 29 | 3234-14 | 3 | Screw-HHF |

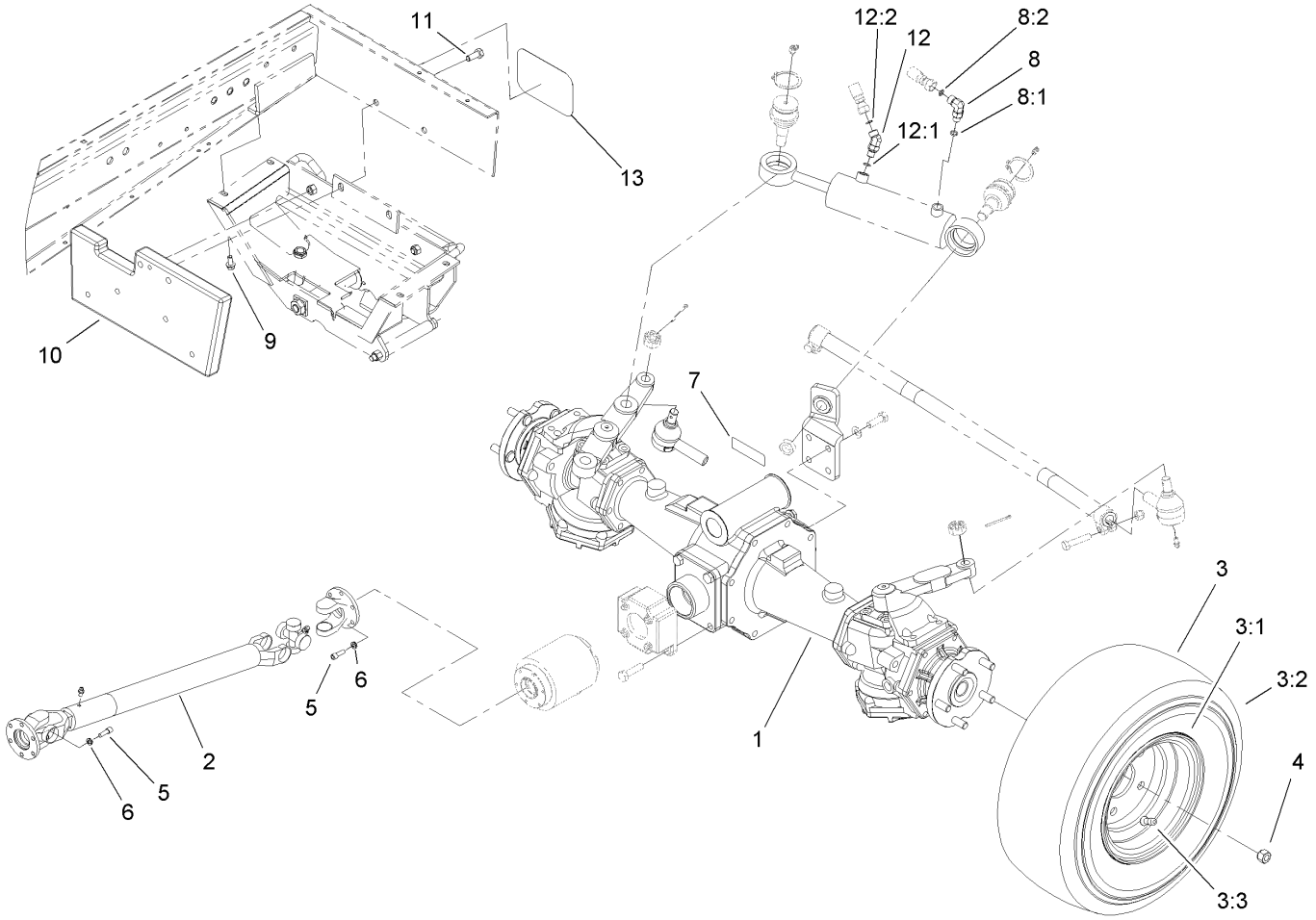


# Driveshaft and 4 Wheel Drive Assembly

| Ref | Part No. | Qty. | Description |
|---|---|---|---|
| ❷1 | | 1 | Rear Axle ASM |
| 2 | 98-5009 | 1 | Driveshaft ASM |
| ❷3 | | 2 | Tire And Wheel ASM |
| 3:1 | 105-7846 | 1 | Wheel |
| 3:2 | 231-122 | 1 | Tire |
| 3:3 | 232-27 | 1 | Stem-Valve |
| 4 | 93-5268 | 10 | Nut-Lug |
| 5 | 3274-8 | 12 | Screw-HSH |
| 6 | 3253-3 | 12 | Washer-Lock |
| 7 | 93-6697 | 1 | Decal-Lube |
| 8 | 340-132 | 1 | Fitting-HYD, 90 DEG |
| 8:1 | 237-78 | 1 | O-Ring |
| 8:2 | 237-21 | 1 | O-Ring |
| 9 | 3234-25 | 4 | Screw-HHF |
| 10 | 110-1995-03 | 1 | Weight-Rear, Inside |
| 11 | 325-5 | 4 | Screw-HH |
| 12 | 340-103 | 1 | Fitting-HYD, 45 DEG |
| 12:1 | 237-78 | 1 | O-Ring |
| 12:2 | 237-21 | 1 | O-Ring |
| 13 | 62-7400 | 1 | Decal |

| | | | |
|---|---|---|---|
| | | | |

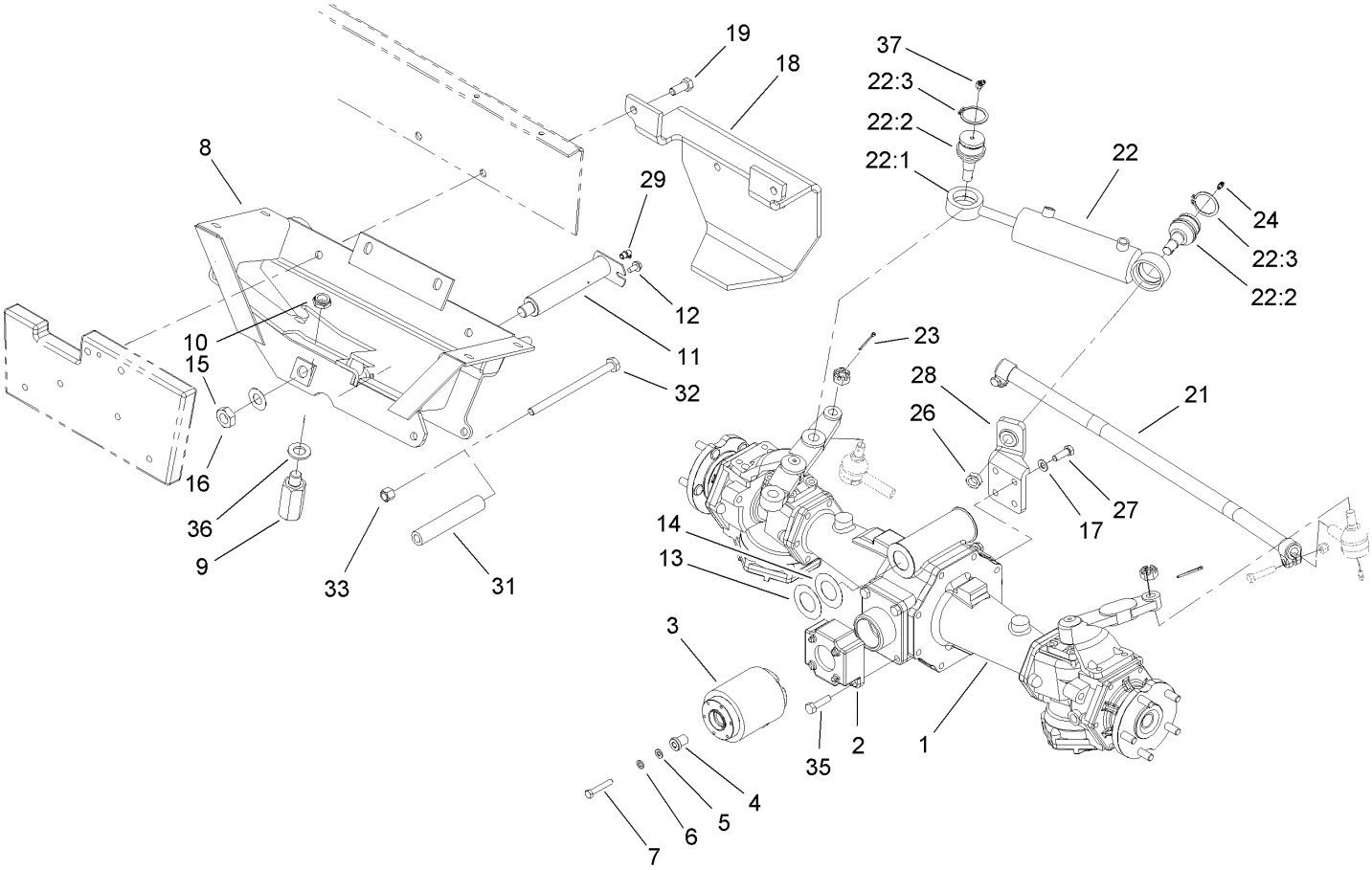


# Rear Axle Assembly

| Ref | Part No. | Qty. | Description |
|---|---|---|---|
| 1 | 106-1120 | 1 | Rear Axle ASM |
| 2 | 98-3860-03 | 1 | Adaptor-Locator, Clutch |
| 3 | 95-6296 | 1 | Clutch-Bidirectional |
| 4 | 98-1823 | 1 | Spacer |
| 5 | 33094-00 | 1 | Washer-Plain |
| 6 | 3253-4 | 1 | Washer-Lock |
| 7 | 33114-050 | 1 | Screw-HH |
| 8 | 105-4295-03 | 1 | Axle Support ASM |
| 9 | 98-3863 | 1 | Stop-Oscillation |
| 10 | 3296-15 | 1 | Nut-Lock, NI |
| 11 | 99-8434-03 | 1 | Rear Axle Pin ASM |
| 12 | 32144-14 | 1 | Screw-HWH |
| 13 | 99-8431 | 1 | Washer-Thrust |
| 14 | 99-8432 | 1 | Washer-Thrust |
| 15 | 71-4540 | 1 | Washer-Thrust |
| 16 | 32146-20 | 1 | Nut-Jam |
| 17 | 48-9220 | 4 | Washer |
| 18 | 99-2405-03 | 1 | Bumper |
| 19 | 325-5 | 2 | Screw-HH |
| 21 | 98-3871-03 | 1 | Tie Rod ASM |
| ❷22 | | 1 | Steering Cylinder ASM |
| 22:1 | 99-2415 | 1 | Cylinder-HYD |
| 22:2 | 106-6774 | 2 | Joint-Ball |
| 22:3 | 32151-104 | 2 | Ring-Retaining, External |

| Ref | Part No. | Qty. | Description |
|---|---|---|---|
| 23 | 3272-11 | 2 | Pin-Cotter |
| 24 | 302-11 | 1 | Fitting-Lube, 45 DEG |
| 26 | 3220-6 | 4 | Nut-Jam |
| 27 | 108-1420 | 4 | Screw-HSH |
| 28 | 98-3862-03 | 1 | Bracket-Support, Cylinder |
| 29 | 302-33 | 1 | Fitting-Grease |
| 31 | 99-2404-03 | 1 | Stop-Rear Axle, LH |
| 32 | 325-36 | 1 | Screw-HH |
| 33 | 3296-23 | 1 | Nut-Lock, NI |
| 35 | 87-3700 | 2 | Screw-Cap, HH |
| 36 | 3256-28 | 1 | Washer-Flat |
| 37 | 302-5 | 1 | Fitting-Grease |

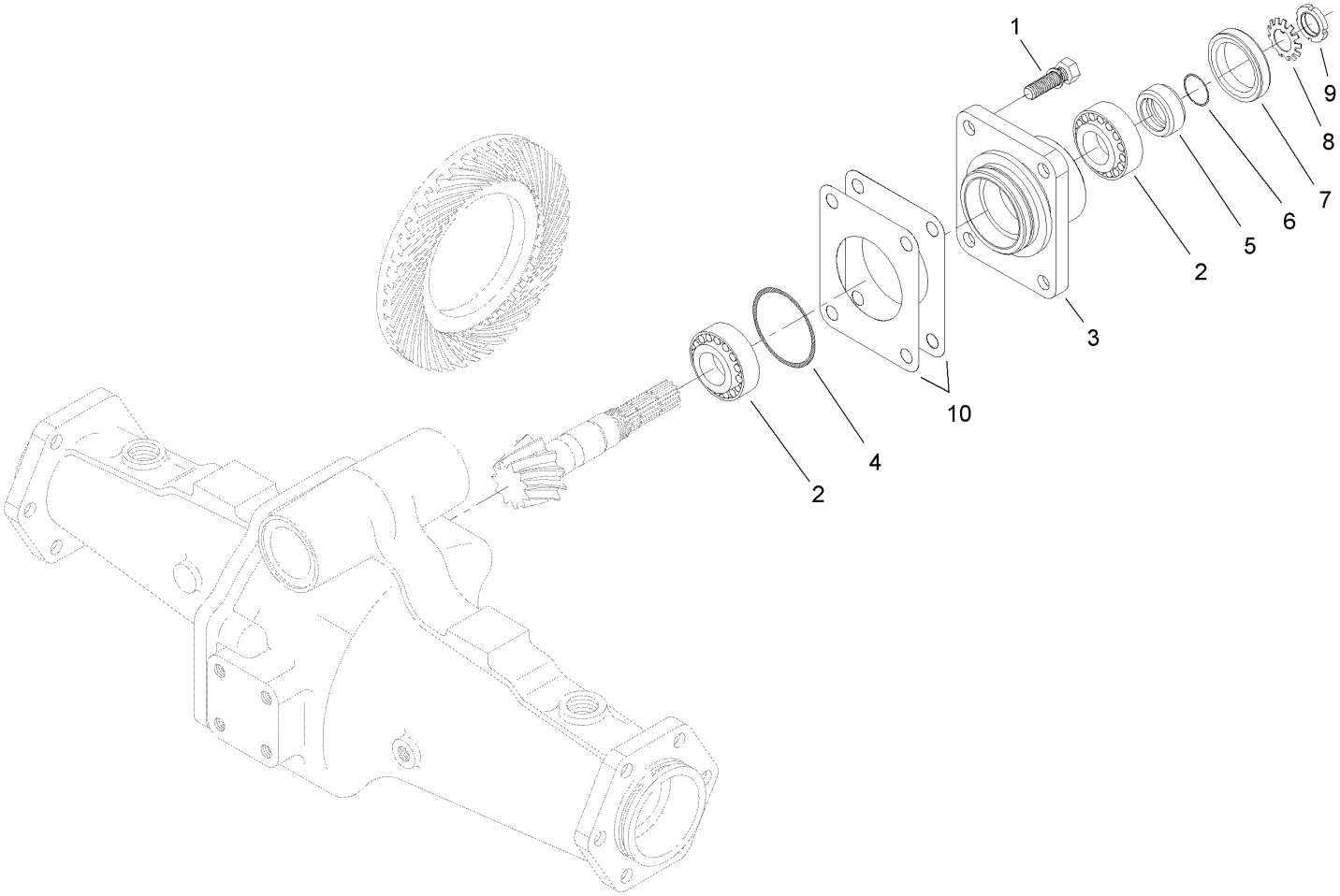


# Bevel Pinion Shaft Assembly
# Rear Axle Assembly No. 106-1120

| Ref | Part No. | Qty. | Description |
|---|---|---|---|
| 1 | 99-7575 | 4 | Bolt |
| 2 | 99-7570 | 2 | Bearing-Roller, Taper |
| 3 | 95-7535 | 1 | Case-Bearing |
| 4 | 106-1065 | 1 | O-Ring |
| 5 | 99-7572 | 1 | Collar-Seal, Oil |
| 6 | 106-1066 | 1 | O-Ring |
| 7 | 99-7574 | 1 | Seal-Oil |
| 8 | 99-7559 | 1 | Washer-Lock |
| 9 | 99-7560 | 1 | Nut-Lock |
| 10 | 99-7550 | 2 | Shim 0.1 |
| 10 | 99-7551 | 2 | Shim 0.2 |

| | | | |
|---|---|---|---|
| | | | |

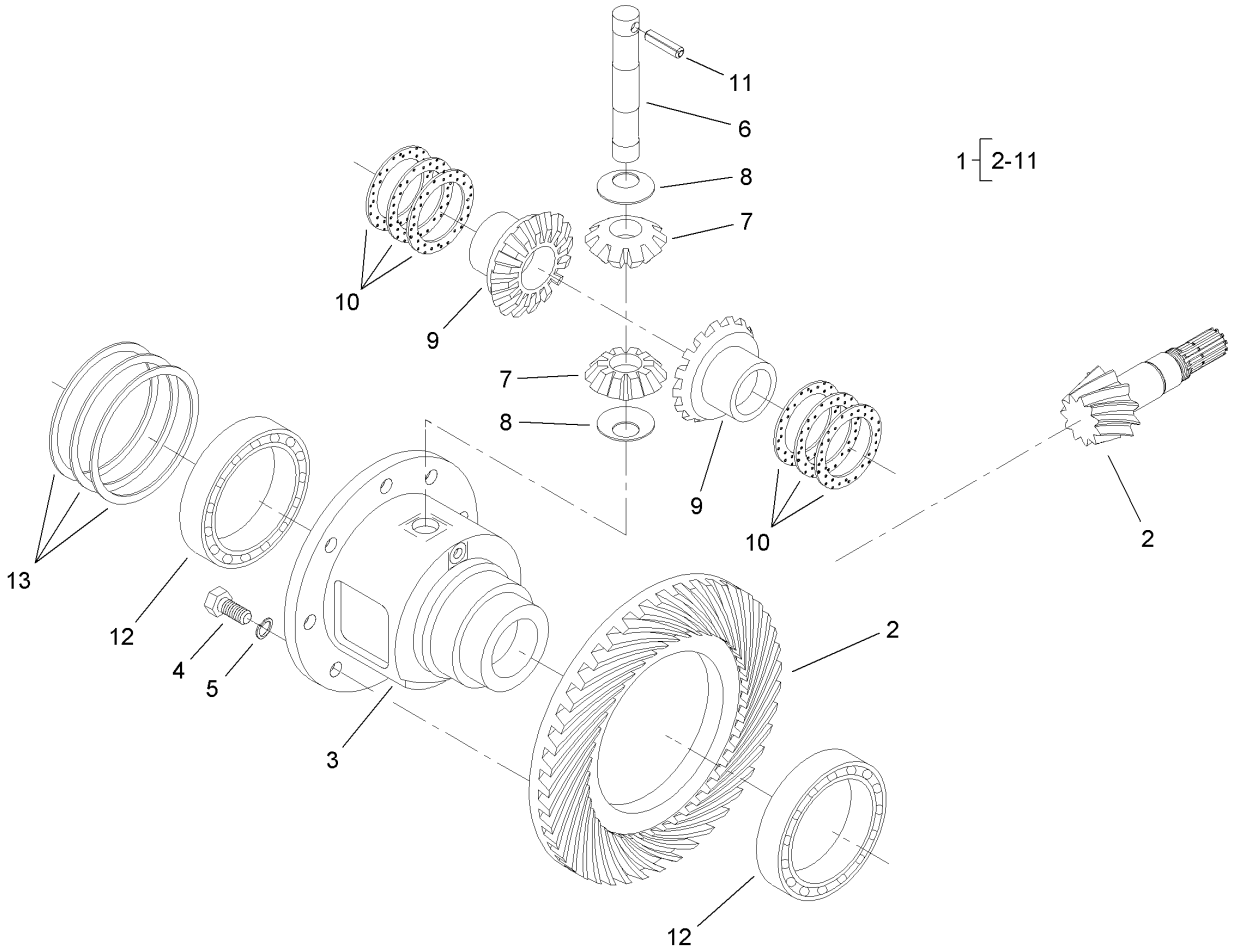


# Differential Assembly
# Rear Axle Assembly No. 106-1120

| Ref | Part No. | Qty. | Description |
|---|---|---|---|
| 1 | 95-7503 | 1 | Differential ASM |
| 2 | 106-1093 | 1 | Ring And Pinion, Matched Set |
| 3 | 95-7502 | 1 | Case-Differential |
| 4 | 99-7576 | 8 | Bolt |
| 5 | 3253-4 | 8 | Washer-Lock |
| 6 | 99-7578 | 1 | Shaft-Differential |
| 7 | 99-7579 | 2 | Pinion-Differential |
| 8 | 99-7580 | 2 | Washer-Differential |
| 9 | 99-7581 | 2 | Gear-Differential |
| 10 | 99-7582 | 2 | Washer-Differential |
| 10 | 99-7583 | 2 | Washer-Differential |
| 10 | 99-7584 | 2 | Washer-Differential |
| 11 | 99-7588 | 1 | Pin-Spring |
| 12 | 99-7562 | 2 | Bearing-Ball |
| 13 | 99-7585 | 2 | Shim 0.1 |
| 13 | 99-7586 | 2 | Shim 0.2 |
| 13 | 99-7587 | 2 | Shim 0.4 |

| | | | |
|---|---|---|---|
| | | | |

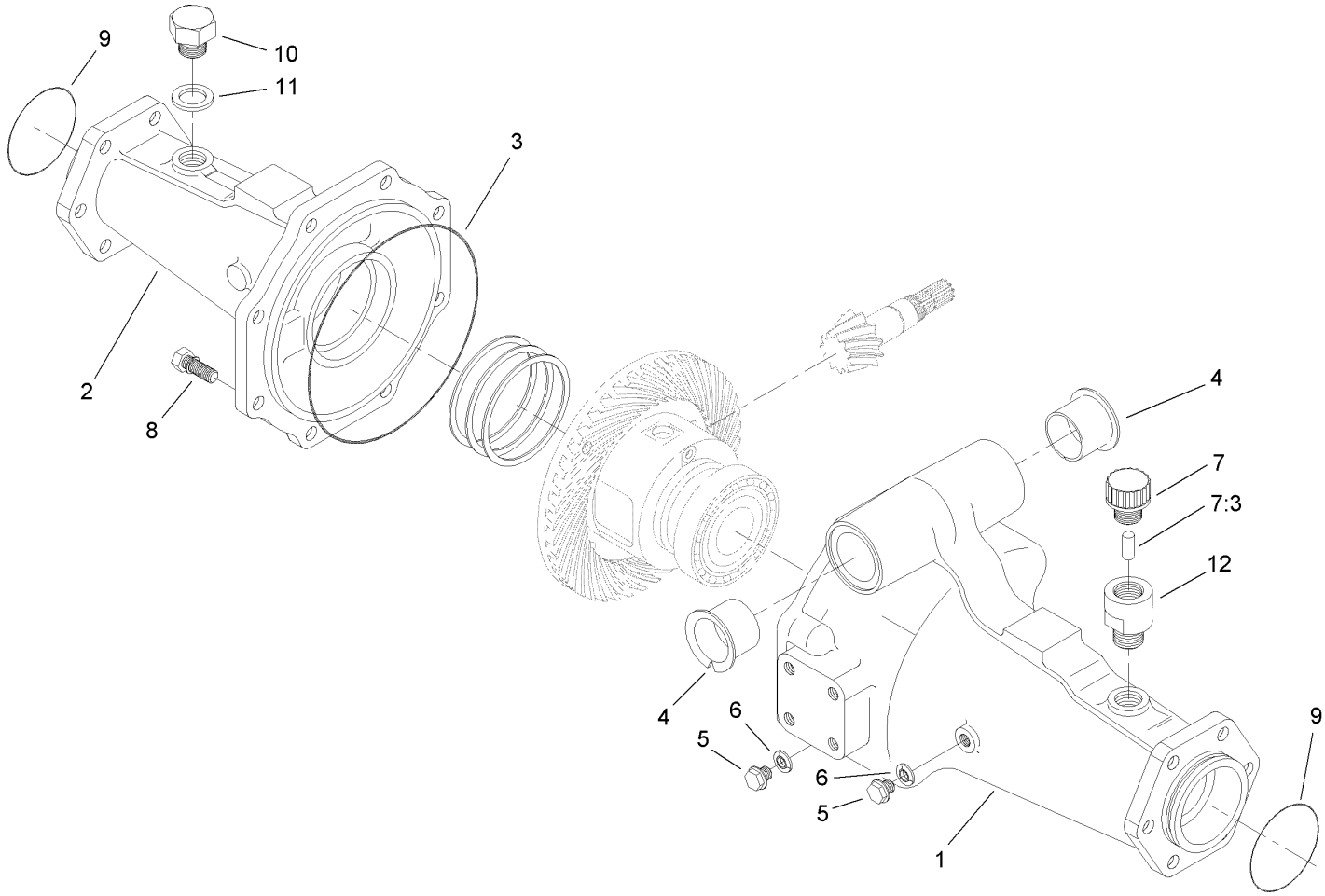


# Axle Support Assembly
# Rear Axle Assembly No. 106-1120

| Ref | Part No. | Qty. | Description |
|---|---|---|---|
| 1 | 95-7508 | 1 | Support-Axle |
| 2 | 95-7506 | 1 | Support-Axle |
| 3 | 106-1067 | 1 | O-Ring |
| 4 | 95-7537 | 2 | Bushing-Flanged |
| 5 | 99-7589 | 2 | Plug |
| 6 | 99-7590 | 2 | Washer-Seal |
| 7 | 110-4812 | 1 | Axle Vent ASM |
| 7:3 | 110-4815 | 1 | Insert-Filter, Foam |
| 8 | 99-7592 | 8 | Bolt |
| 9 | 106-1068 | 2 | O-Ring |
| 10 | 104-8643 | 1 | Plug |
| 11 | 104-8644 | 1 | O-Ring |
| 12 | 104-2377 | 1 | Extension-Vent |

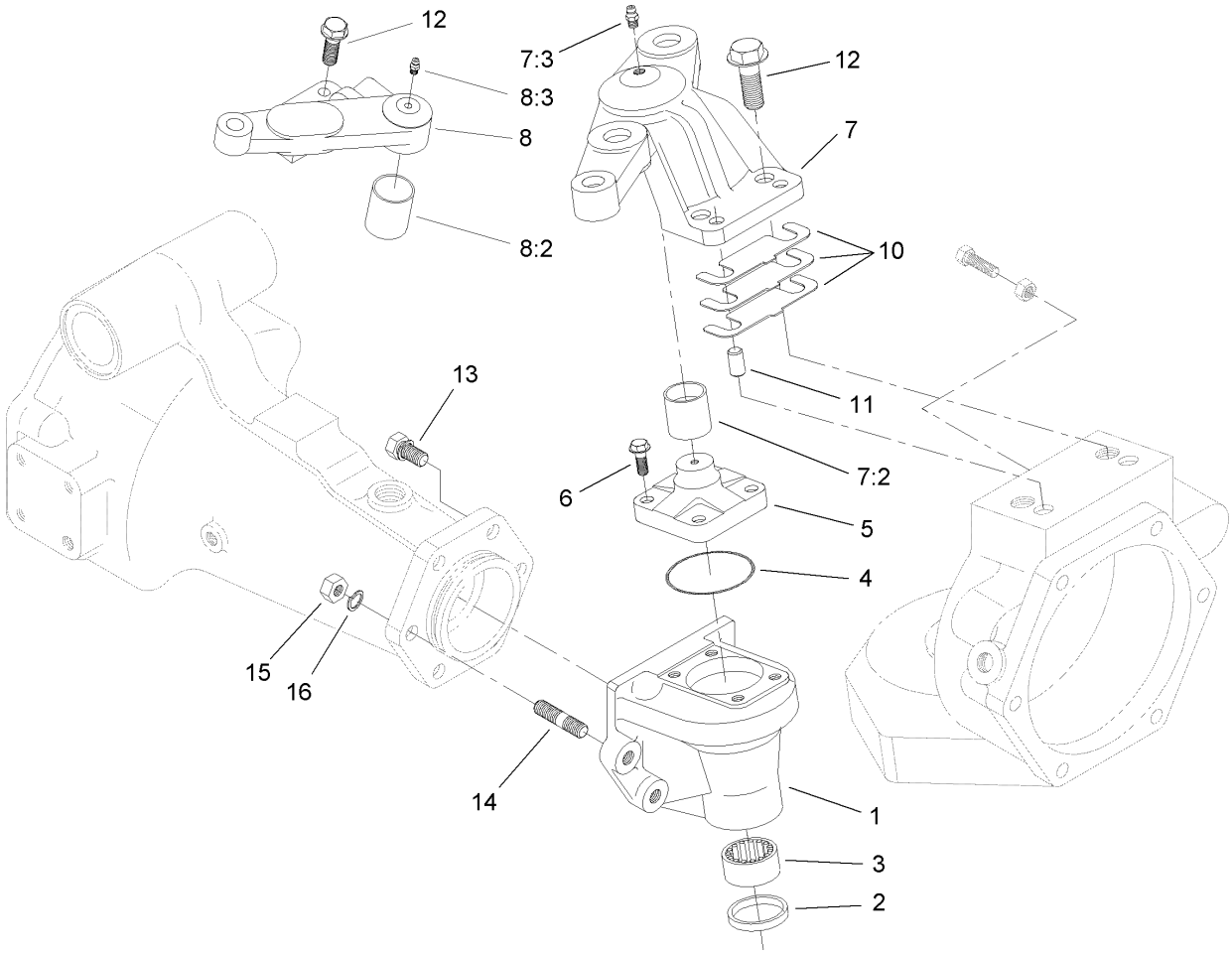


# Bevel Gearcase Assembly
# Rear Axle Assembly No. 106-1120

| Ref | Part No. | Qty. | Description |
|---|---|---|---|
| 1 | 106-1099 | 2 | Case-Gear, Bevel |
| 2 | 99-7594 | 2 | Seal-Oil |
| 3 | 99-7595 | 2 | Bearing-Needle |
| 4 | 106-1069 | 2 | O-Ring |
| 5 | 104-2373 | 2 | Knuckle |
| 6 | 104-2374 | 8 | Bolt |
| 7 | 110-4756 | 1 | RH Axle Case Support ASM |
| 7:2 | 99-7529 | 1 | Bushing |
| 7:3 | 99-7528 | 1 | Nipple-Grease |
| 8 | 110-4757 | 1 | LH Axle Case Support ASM |
| 8:2 | 99-7529 | 1 | Bushing |
| 8:3 | 99-7528 | 1 | Nipple-Grease |
| 10 | 95-7547 | 2 | Shim 0.1 |
| 10 | 95-7548 | 2 | Shim 0.2 |
| 10 | 95-7549 | 2 | Shim 0.4 |
| 11 | 99-7597 | 4 | Pin-Dowel |
| 12 | 99-7598 | 4 | Bolt |
| 13 | 99-7599 | 8 | Bolt |
| 14 | 99-7525 | 4 | Stud |
| 15 | 99-7526 | 4 | Nut |
| 16 | 99-7527 | 4 | Washer-Spring |

| | | | |
|---|---|---|---|
| | | | |

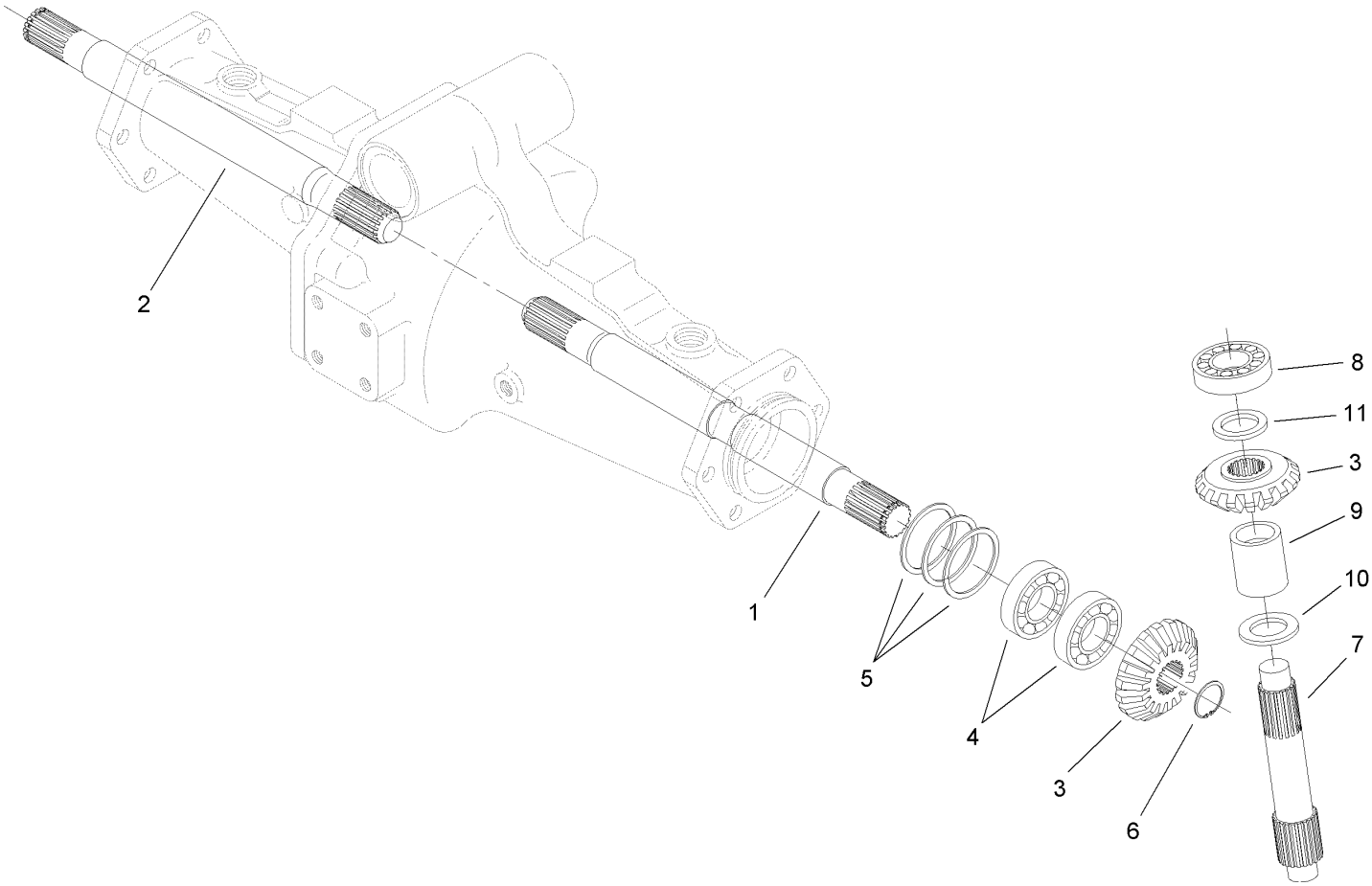


# Bevel Gear Shaft Assembly
# Rear Axle Assembly No. 106-1120

| Ref | Part No. | Qty. | Description |
|---|---|---|---|
| 1 | 95-7509 | 1 | Shaft-Gear, Differential |
| 2 | 95-7512 | 1 | Shaft-Gear, Differential |
| 3 | 95-7518 | 4 | Gear-Bevel, 18 Tooth |
| 4 | 99-7530 | 4 | Bearing-Ball |
| 5 | 99-7552 | 2 | Shim 0.1 |
| 5 | 99-7553 | 2 | Shim 0.2 |
| 5 | 99-7554 | 2 | Shim 0.5 |
| 6 | 99-7531 | 2 | Clip |
| 7 | 106-1101 | 2 | Shaft-Gear, Bevel |
| 8 | 99-7532 | 2 | Bearing-Roller, Taper |
| 9 | 95-7543 | 2 | Spacer |
| 10 | 99-7533 | 2 | Collar-Thrust |
| 11 | 99-7558 | 2 | Collar |

| | | | |
|---|---|---|---|
| | | | |

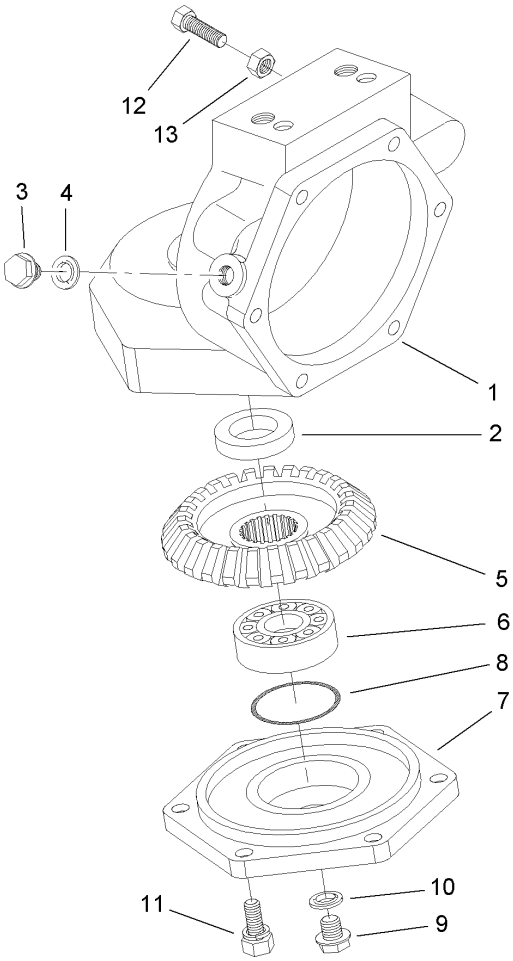


# Axle Case Assembly
# Rear Axle Assembly No. 106-1120

| Ref | Part No. | Qty. | Description |
|---|---|---|---|
| 1 | 106-1100 | 2 | Case-Axle |
| 2 | 99-7594 | 2 | Seal-Oil |
| 3 | 99-7535 | 2 | Plug |
| 4 | 99-7536 | 2 | Washer-Seal |
| 5 | 95-7528 | 2 | Gear-Bevel, 27 Tooth |
| 6 | 99-7532 | 2 | Bearing-Roller, Taper |
| 7 | 95-7526 | 2 | Cover-Axle |
| 8 | 106-1072 | 2 | O-Ring |
| 9 | 99-7589 | 2 | Plug |
| 10 | 99-7590 | 2 | Washer-Seal |
| 11 | 99-7596 | 12 | Bolt |
| 12 | 106-1102 | 2 | Bolt-Stop |
| 13 | 106-1103 | 2 | Nut |

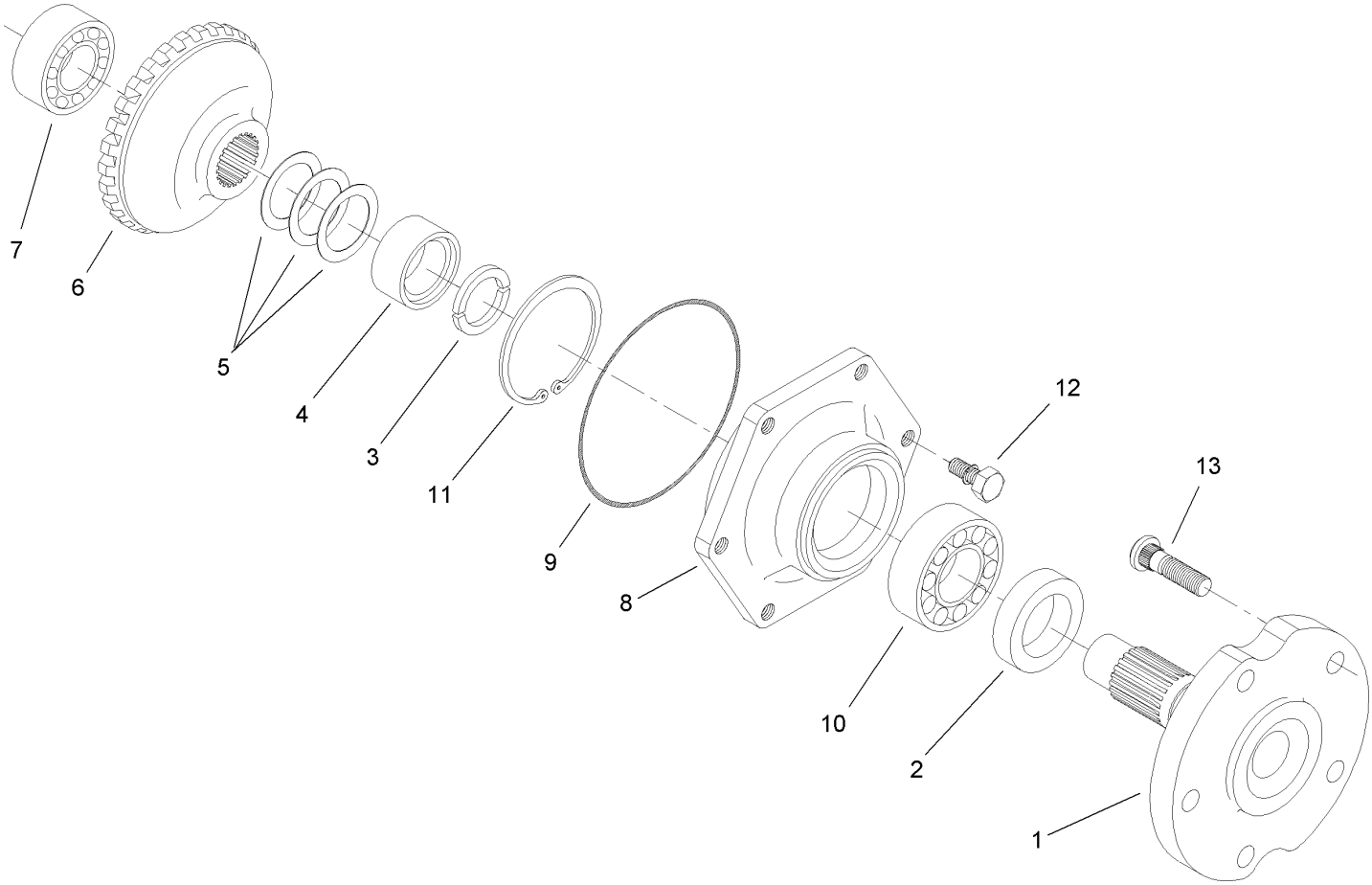


# Axle Assembly
# Rear Axle Assembly No. 106-1120

| Ref | Part No. | Qty. | Description |
|---|---|---|---|
| 1 | 95-7522 | 2 | Axle |
| 2 | 99-7564 | 2 | Seal-Oil |
| 3 | 95-7544 | 4 | Clip |
| 4 | 95-7523 | 2 | Spacer |
| 5 | 99-7555 | 2 | Shim 0.3 |
| 5 | 99-7556 | 2 | Shim 0.2 |
| 5 | 99-7557 | 2 | Shim 0.5 |
| 6 | 95-7525 | 2 | Gear-Bevel, 27 Tooth |
| 7 | 99-7534 | 2 | Bearing-Ball |
| 8 | 95-7521 | 2 | Cover-Axle |
| 9 | 106-1071 | 2 | O-Ring |
| 10 | 99-7561 | 2 | Bearing-Ball |
| 11 | 99-7539 | 2 | Clip |
| 12 | 99-7596 | 12 | Bolt |
| 13 | 99-7563 | 10 | Stud |

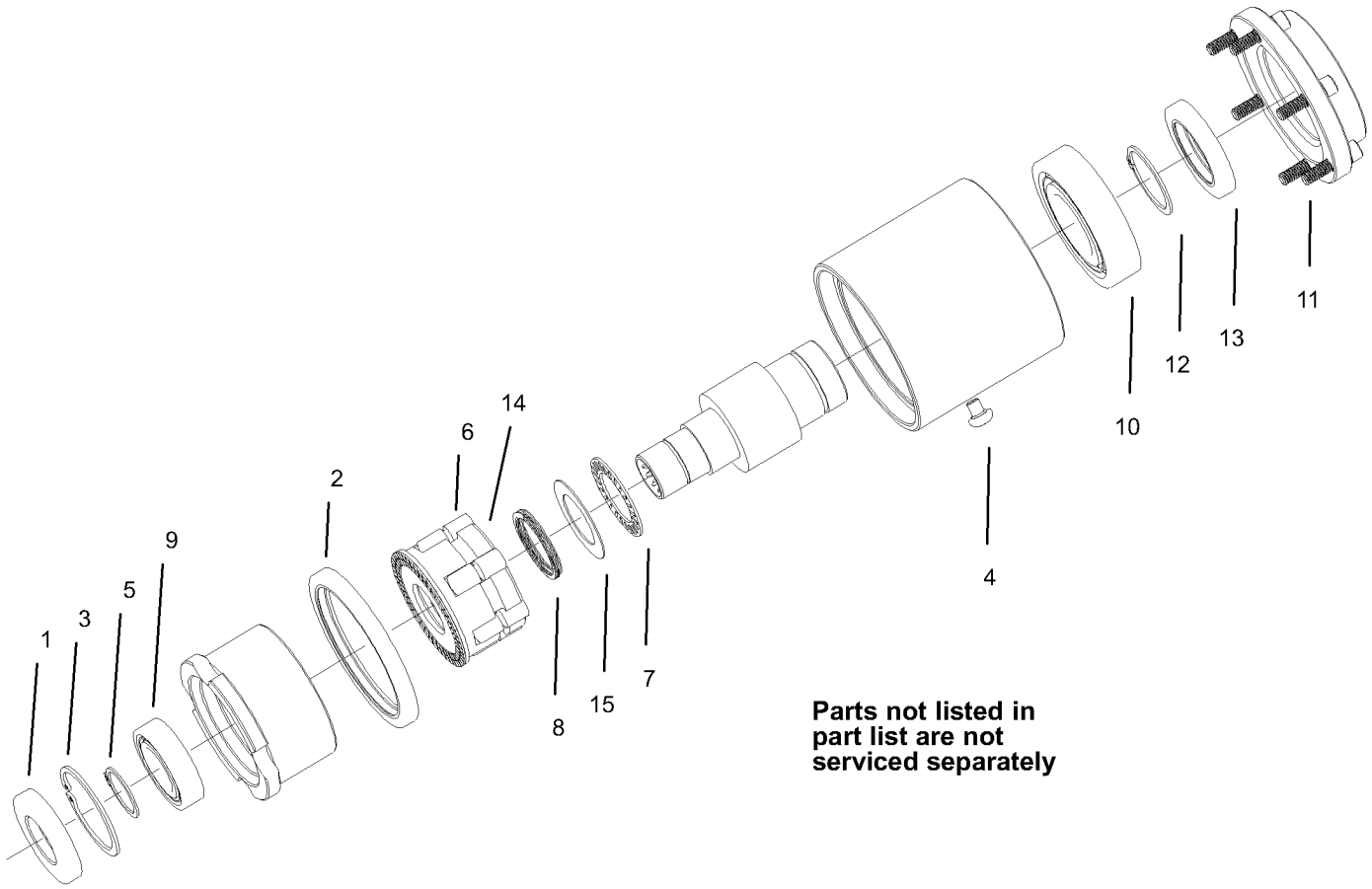


# Bi-Directional Clutch Assembly No. 95-6296

| Ref | Part No. | Qty. | Description |
|---|---|---|---|
| 1 | 100-6589 | 1 | Seal-Oil |
| 2 | 100-6593 | 1 | Seal-Oil |
| 3 | 32151-75 | 1 | Ring-Retaining |
| 4 | 100-6596 | 1 | Screw-PPH |
| 5 | 100-6597 | 1 | Ring-Snap, External |
| 6 | 93-8925 | 6 | Roller |
| 7 | 93-8919 | 1 | Bearing-Needle, Thrust |
| 8 | 93-8923 | 1 | Spring-Wave |
| 9 | 99-2902 | 1 | Bearing |
| 10 | 92-9705 | 1 | Bearing |
| 11 | 3245-6 | 6 | Screw-HSH |
| 12 | 32120-84 | 1 | Ring-Snap, External |
| 13 | 71-6790 | 1 | Seal-Oil |
| 14 | 100-2568 | 1 | Roll Cage ASM |
| 15 | 93-8929 | 1 | Washer-Thrust |

| | | | |
|---|---|---|---|
| | | | |

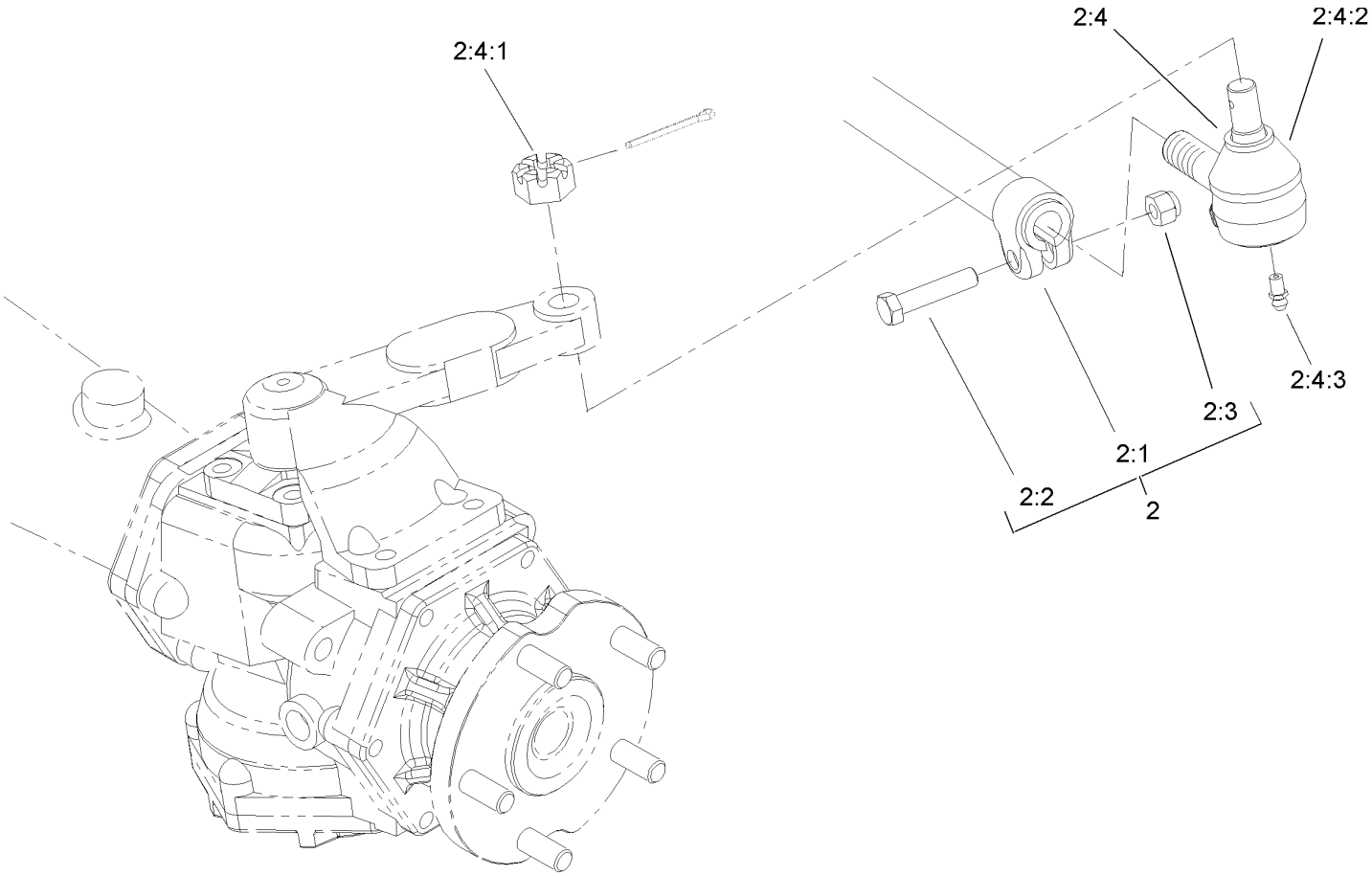


# Tie Rod Assembly No. 98-3871-03

| Ref | Part No. | Qty. | Description |
|---|---|---|---|
| ❷2 | | 1 | Rod-Tie |
| 2:1 | 99-2412-03 | 1 | Rod And Clamp ASM |
| 2:2 | 323-9 | 2 | Screw-HH |
| 2:3 | 3296-39 | 2 | Nut-Lock, NI |
| 2:4 | 71-4740 | 2 | End-Rod, Tie (RH) |
| 2:4:1 | 105-7941 | 1 | Nut-Hex, Slotted |
| 2:4:2 | 105-7835 | 1 | Seal |
| 2:4:3 | 302-5 | 1 | Fitting-Grease |

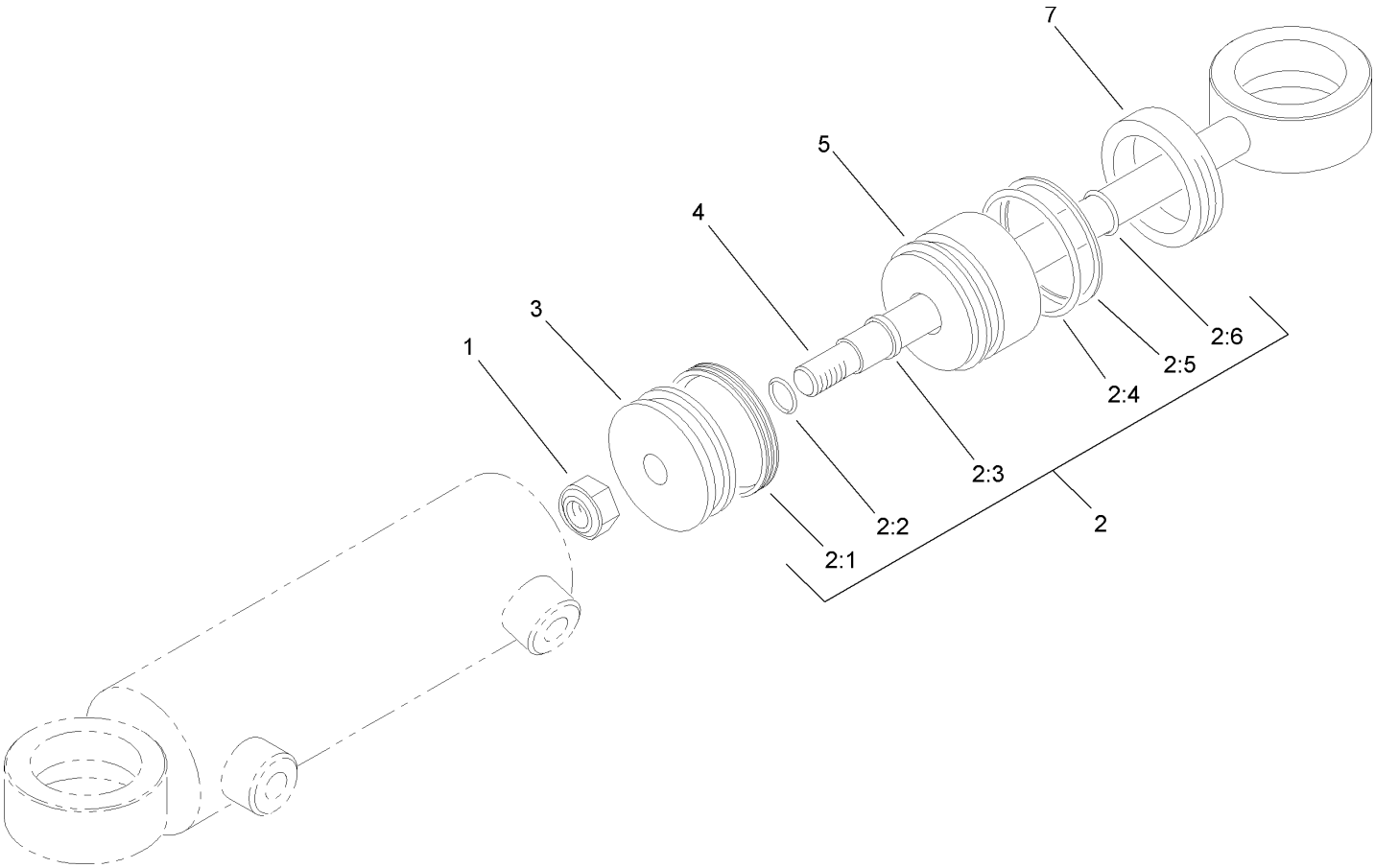


# Hydraulic Cylinder Assembly No. 99-2415

| Ref | Part No. | Qty. | Description |
|---|---|---|---|
| 1 | 32152-10 | 1 | Locknut |
| 2 | 86-5390 | 1 | Seal Kit |
| ❷2:1 | | 1 | Uniring |
| ❷2:2 | | 1 | Seal-Dust |
| ❷2:3 | | 1 | Seal-Rod |
| ❷2:4 | | 1 | Seal-Dust |
| ❷2:5 | | 1 | Ring-Backup |
| ❷2:6 | | 1 | Seal-Dust |
| ❷3 | | 1 | Piston |
| ❷4 | | 1 | Rod |
| ❷5 | | 1 | Head |
| ❷7 | | 1 | Collar-Internal |

| | | | |
|---|---|---|---|
| | | | |

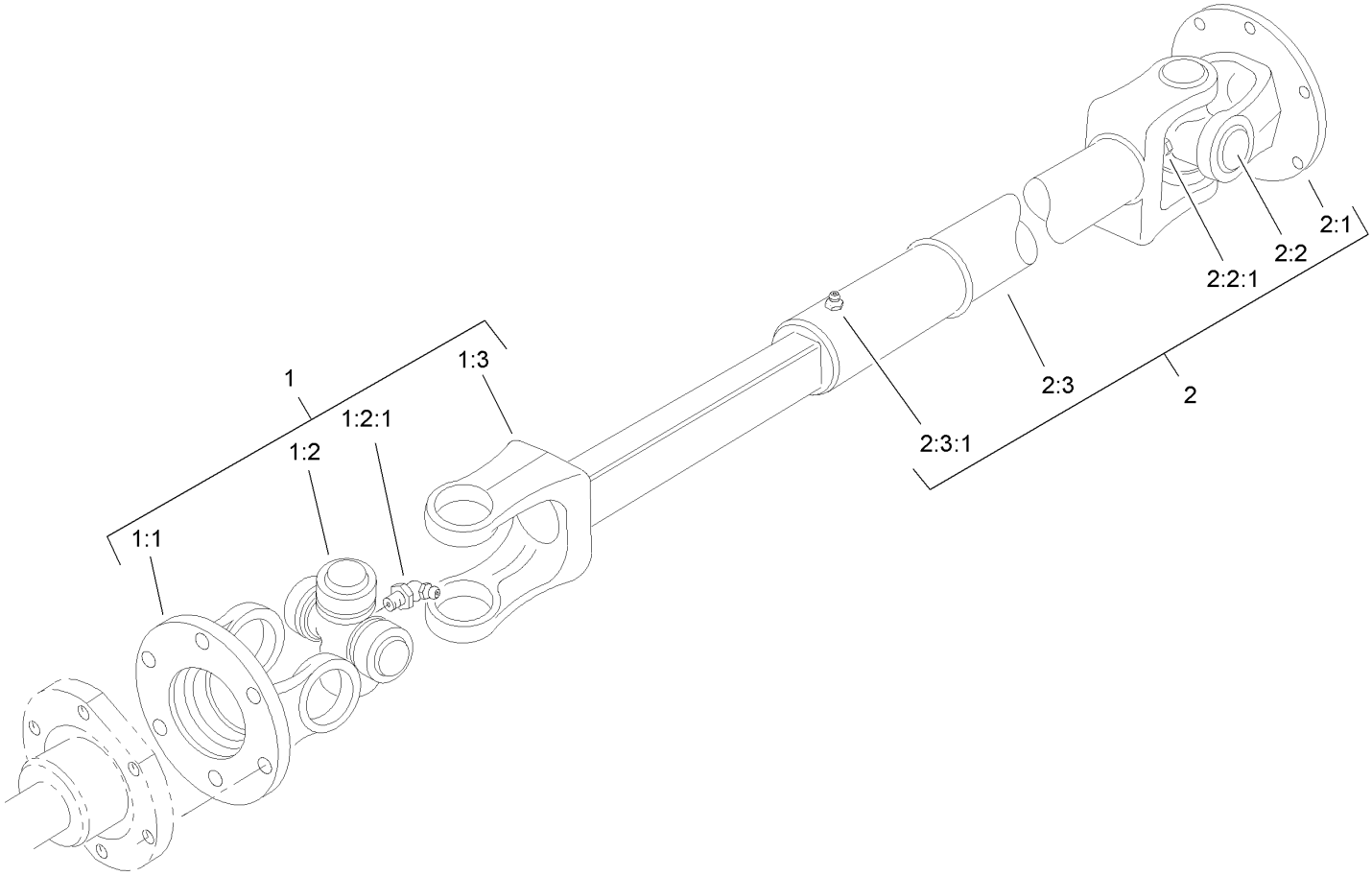


# Driveshaft Assembly No. 98-5009

| Ref | Part No. | Qty. | Description |
|---|---|---|---|
| 1 | 92-5096 | 1 | Joint And Shaft ASM |
| 1:1 | 72-3410 | 1 | Yoke-Flange |
| 1:2 | 54-9180 | 1 | U-Joint Kit |
| 1:2:1 | 62-3820 | 1 | Fitting-Grease |
| 1:3 | 72-3420 | 1 | Yoke And Shaft ASM |
| 2 | 98-3882 | 1 | Joint And Tube ASM |
| 2:1 | 72-3410 | 1 | Yoke-Flange |
| 2:2 | 54-9180 | 1 | U-Joint Kit |
| 2:2:1 | 62-3820 | 1 | Fitting-Grease |
| 2:3 | 72-3431 | 1 | Yoke And Tube ASM |
| 2:3:1 | 302-58 | 1 | Fitting-Straight |

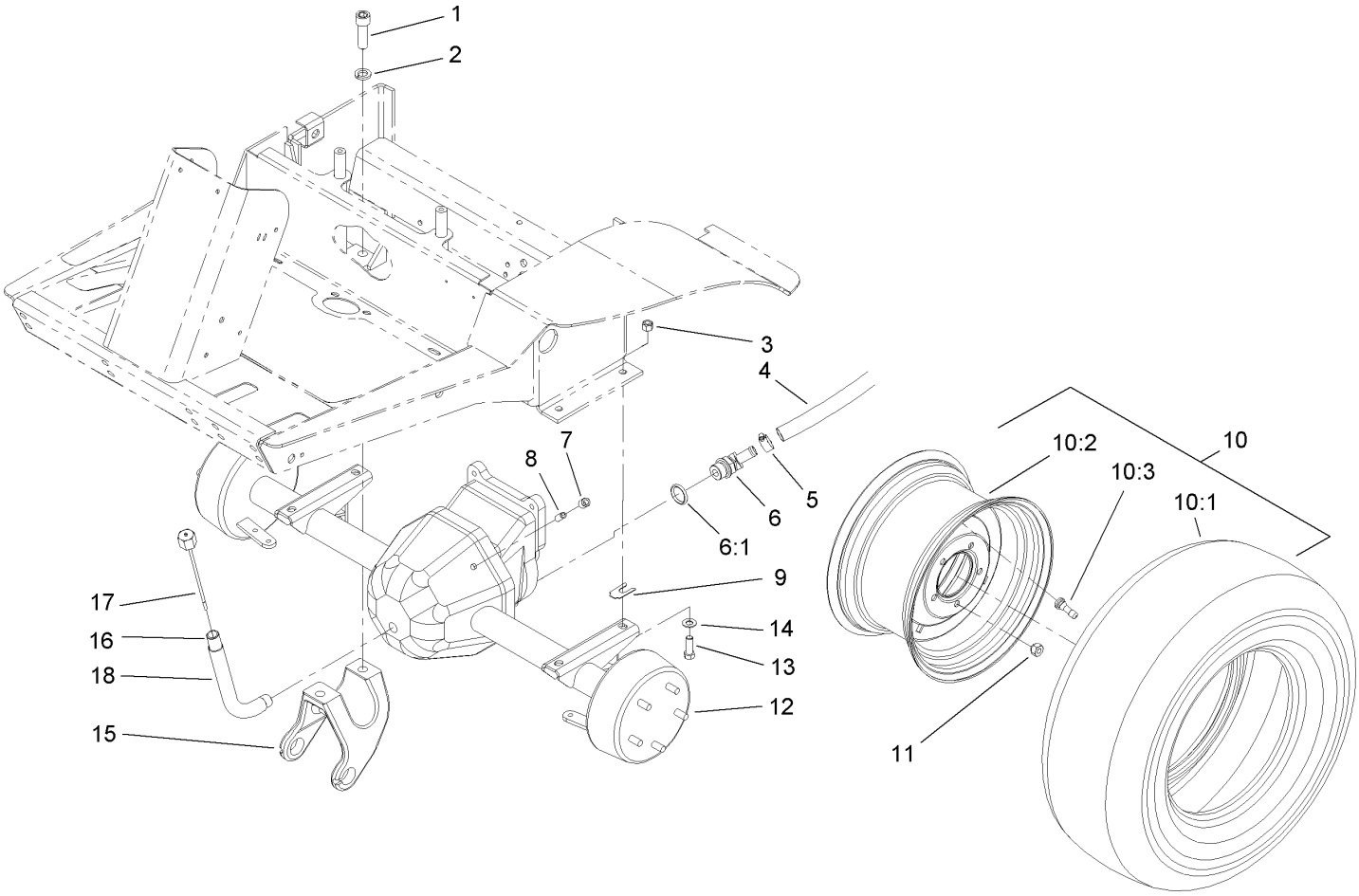


# Front Axle Assembly

| Ref | Part No. | Qty. | Description |
|---|---|---|---|
| 1 | 3273-38 | 4 | Screw-HSH |
| 2 | 3253-8 | 4 | Washer-Lock |
| 3 | 3296-48 | 4 | Nut-Lock, NI |
| 4 | 92-5083 | 1 | Hose-HYD |
| 5 | 2412-119 | 1 | Clamp-Worm |
| 6 | 92-5088 | 1 | Fitting-Elbow, 45 DEG |
| 6:1 | 237-81 | 1 | O-Ring |
| 7 | 2810-1 | 1 | Coupling-Pipe |
| 8 | 289-6 | 1 | Nipple-Pipe |
| 9 | 42-6080 | 1 | Shim-Axle |
| ❷10 | | 2 | Wheel And Tire ASM |
| 10:1 | 108-6594 | 1 | Tire-Standard |
| 10:2 | 108-1358 | 1 | Wheel |
| 10:3 | 232-27 | 1 | Stem-Valve |
| 11 | 242-50 | 10 | Nut-Lug |
| 12 | 108-6599-03 | 1 | Axle ASM |
| 13 | 324-5 | 4 | Screw-HH |
| 14 | 3256-25 | 4 | Washer-Flat |
| 15 | 110-9678-03 | 2 | Bracket-Carrier |
| 16 | 105-7169 | 1 | Tube-Fill, Oil |
| 17 | 105-7172 | 1 | Dipstick ASM |
| 18 | 110-5651 | 1 | Sleeve-Protective |

| | | | |
|---|---|---|---|
| | | | |

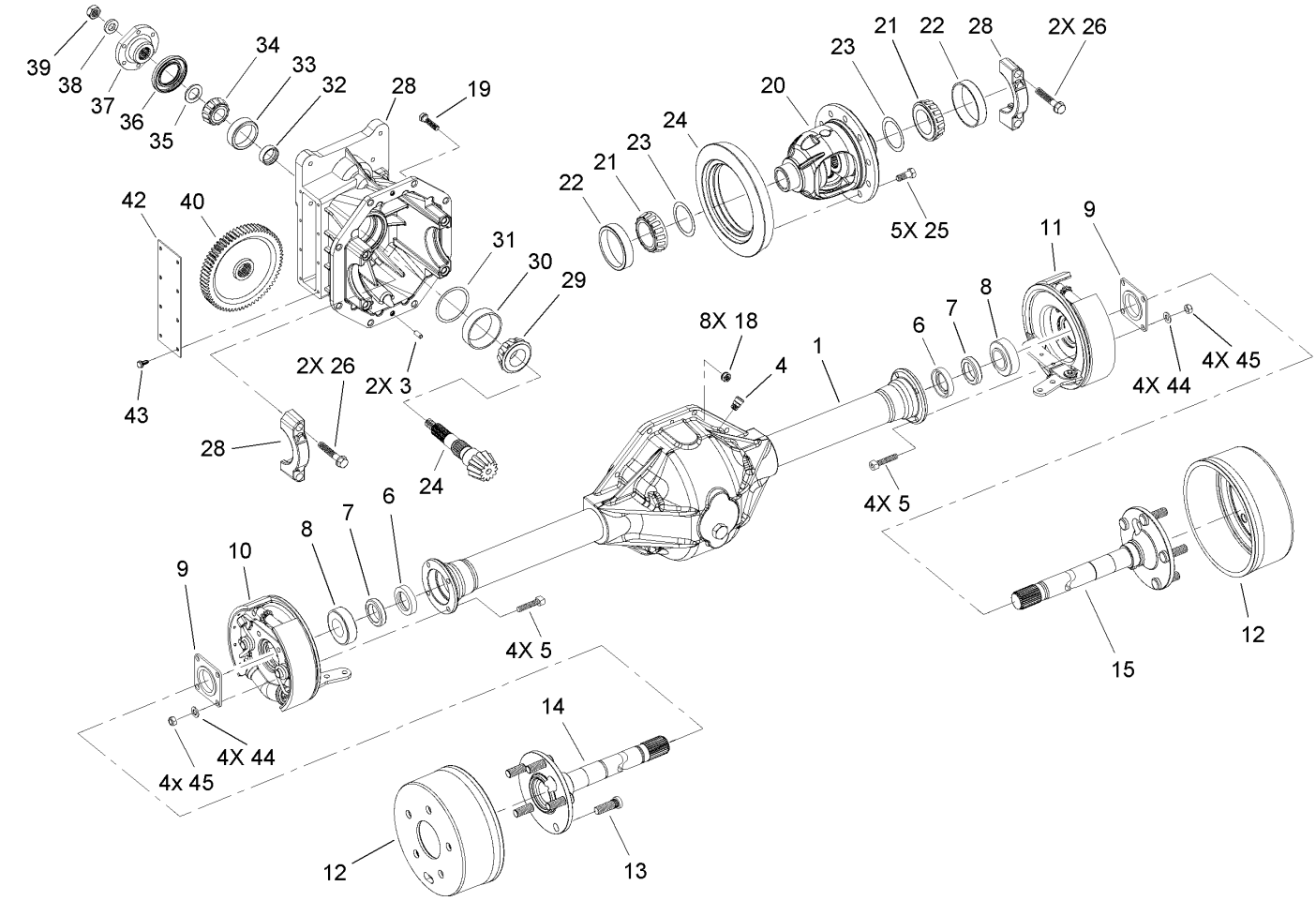


# Front Axle Assembly No. 108-6599-03

| Ref | Part No. | Qty. | Description |
|---|---|---|---|
| 1 | 110-9670 | 1 | Lower Housing ASM |
| 3 | 21-8270 | 2 | Pin-Dowel |
| 4 | 72-9420 | 1 | Vent |
| 5 | 94-6934 | 8 | Screw-HH |
| 6 | 24-8840 | 2 | Ring-Retaining, Wheel Bearing |
| 7 | 92-1774 | 2 | Seal-Oil |
| 8 | 21-8180 | 2 | Bearing ASM |
| 9 | 28-0670 | 2 | Seal-Grease |
| ❷10 | | 1 | Brake ASM, RH |
| ❷11 | | 1 | Brake ASM, LH |
| 12 | 110-3072 | 2 | Drum-Brake |
| 13 | 106-9205 | 10 | Stud-Wheel |
| 14 | 110-3073 | 1 | Shaft-Axle, RH |
| 15 | 110-3074 | 1 | Shaft-Axle, LH |
| 18 | 32149-5 | 8 | Nut-Keps |
| 19 | 3210-8 | 8 | Screw-HH |
| 20 | 110-4136 | 1 | Differential Case ASM |
| 21 | 254-65 | 2 | Cone-Bearing, Roller |
| 22 | 254-66 | 2 | Cup-Bearing, Roller |
| 23 | 21-8090 | 1 | Shim-Bearing, Differential (.003) |
| 23 | 21-8100 | 1 | Shim-Bearing, Differential (.005) |
| 23 | 21-8110 | 1 | Shim-Bearing, Differential (.010) |
| 23 | 21-8120 | 1 | Shim-Bearing, Differential (.030) |
| 24 | 92-1676 | 1 | Gear And Pinion ASM |

| Ref | Part No. | Qty. | Description |
|---|---|---|---|
| 25 | 21-7770 | 5 | Screw-Gear, Drive |
| 26 | 92-1773 | 4 | Screw-HHF |
| 28 | 110-3076 | 1 | Carrier ASM |
| 29 | 43-6760 | 1 | Bearing-Roller, Cone Taper |
| 30 | 43-6750 | 1 | Bearing-Taper, Cup |
| 31 | 43-6710 | 1 | Shim-Pinion (.003) |
| 31 | 43-6711 | 1 | Shim-Pinion (.005) |
| 31 | 43-6712 | 1 | Shim-Pinion (.010) |
| 31 | 43-6713 | 1 | Shim-Pinion (.030) |
| 32 | 21-8020 | 1 | Spacer-Bearing |
| 33 | 254-90 | 1 | Bearing-Cup |
| 34 | 254-91 | 1 | Cone-Bearing |
| 35 | 72-3570 | 1 | Shim-Bearing, Front (.094) |
| 35 | 72-3571 | 1 | Shim-Bearing, Front (.096) |
| 35 | 72-3572 | 1 | Shim-Bearing, Front (.098) |
| 35 | 72-3573 | 1 | Shim-Bearing, Front (.100) |
| 35 | 72-3574 | 1 | Shim-Bearing, Front (.102) |
| 35 | 72-3575 | 1 | Shim-Bearing, Front (.104) |
| 35 | 72-3576 | 1 | Shim-Bearing, Front (.106) |
| 35 | 72-3577 | 1 | Shim-Bearing, Front (.108) |
| 35 | 72-3578 | 1 | Shim-Bearing, Front (.110) |
| 35 | 72-3580 | 1 | Shim-Bearing, Front (.112) |
| 35 | 72-3581 | 1 | Shim-Bearing, Front (.114) |
| 35 | 72-3582 | 1 | Shim-Bearing, Front (.116) |

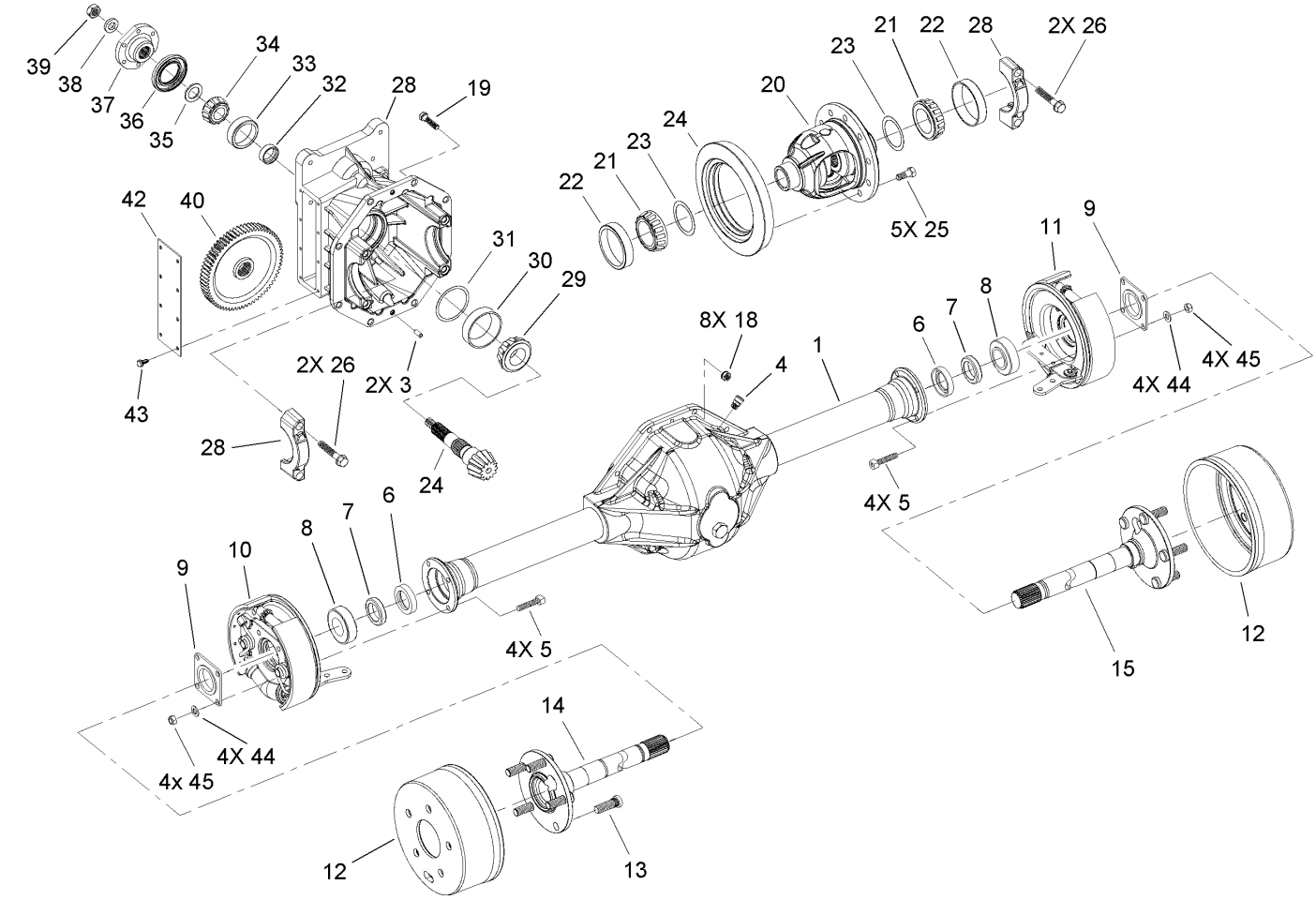


# Front Axle Assembly No. 108-6599-03 (continued)

| Ref | Part No. | Qty. | Description |
|---|---|---|---|
| 35 | 72-3583 | 1 | Shim-Bearing, Front (.118) |
| 35 | 72-3584 | 1 | Shim-Bearing, Front (.120) |
| 35 | 72-3585 | 1 | Shim-Bearing, Front (.125) |
| 35 | 72-3586 | 1 | Shim-Bearing, Front (.127) |
| 35 | 72-3587 | 1 | Shim-Bearing, Front (.129) |
| 35 | 72-3588 | 1 | Shim-Bearing, Front (.131) |
| 35 | 72-3590 | 1 | Shim-Bearing, Front (.133) |
| 35 | 72-3591 | 1 | Shim-Bearing, Front (.135) |
| 35 | 72-3592 | 1 | Shim-Bearing, Front (.137) |
| 35 | 72-3593 | 1 | Shim-Bearing, Front (.139) |
| 35 | 72-3594 | 1 | Shim-Bearing, Front (.141) |
| 35 | 72-3595 | 1 | Shim-Bearing, Front (.143) |
| 35 | 72-3596 | 1 | Shim-Bearing, Front (.145) |
| 35 | 72-3597 | 1 | Shim-Bearing, Front (.147) |
| 35 | 72-3598 | 1 | Shim-Bearing, Front (.149) |
| 35 | 72-3600 | 1 | Shim-Bearing, Front (.151) |
| 36 | 71-4330 | 1 | Seal |
| 37 | 68-7010 | 1 | Flange |
| 38 | 71-4340 | 1 | Washer |
| 39 | 71-4350 | 1 | Nut |
| 40 | 86-7230 | 1 | Gear-Input, Transmission |
| 42 | 21-7830 | 1 | Cover-Gear |
| 43 | 12-5450 | 8 | Screw |
| 44 | 94-6936 | 8 | Washer-Hardened |

| Ref | Part No. | Qty. | Description |
|---|---|---|---|
| 45 | 94-6935 | 8 | Locknut |

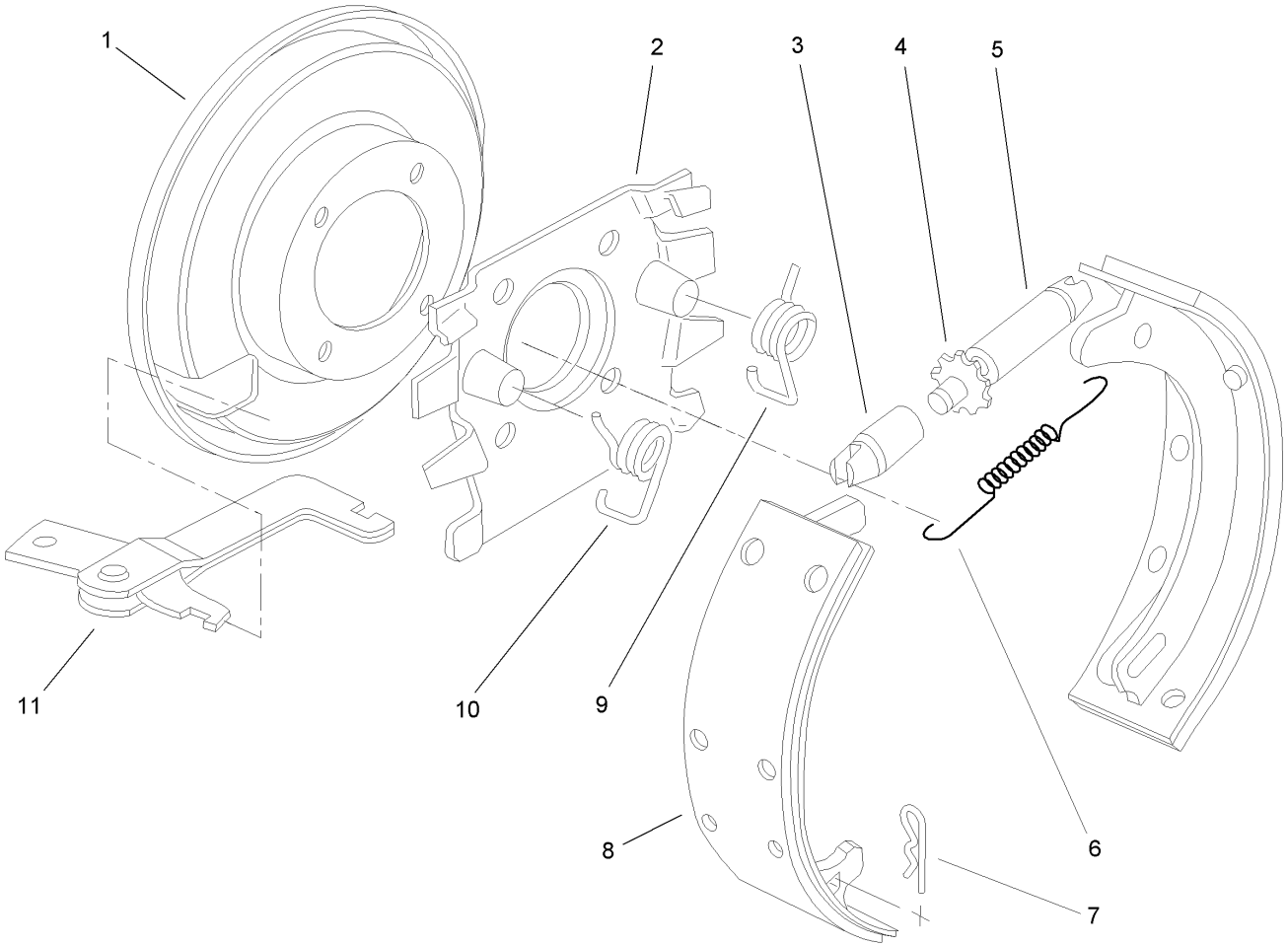


# Right and Left Hand Brake Assembly

| Ref | Part No. | Qty. | Description |
|---|---|---|---|
| 1 | 21-9450 | 1 | Shield-Dust |
| 2 | 43-6810 | 1 | Spider-Torque |
| 3 | 21-9390 | 1 | Socket-Screw, Adjusting |
| 4 | 21-9370 | 1 | Screw-Adjusting |
| 5 | 21-9380 | 1 | Nut-Pivot |
| 6 | 21-9440 | 1 | Spring-Screw, Adjusting |
| 7 | 21-9460 | 2 | Retainer-Lever, Brake |
| 8 | 84-8600 | 1 | Set-Shoes, Lined |
| 9 | 21-9430 | 1 | Spring-Return, RH |
| 10 | 21-9420 | 1 | Spring-Return, LH |
| 11 | 24-9180 | 1 | Strut And Lever ASM |
| ❶12 | 92-8775 | 1 | Liquid Gasket Kit |

| | | | |
|---|---|---|---|
| | | | |

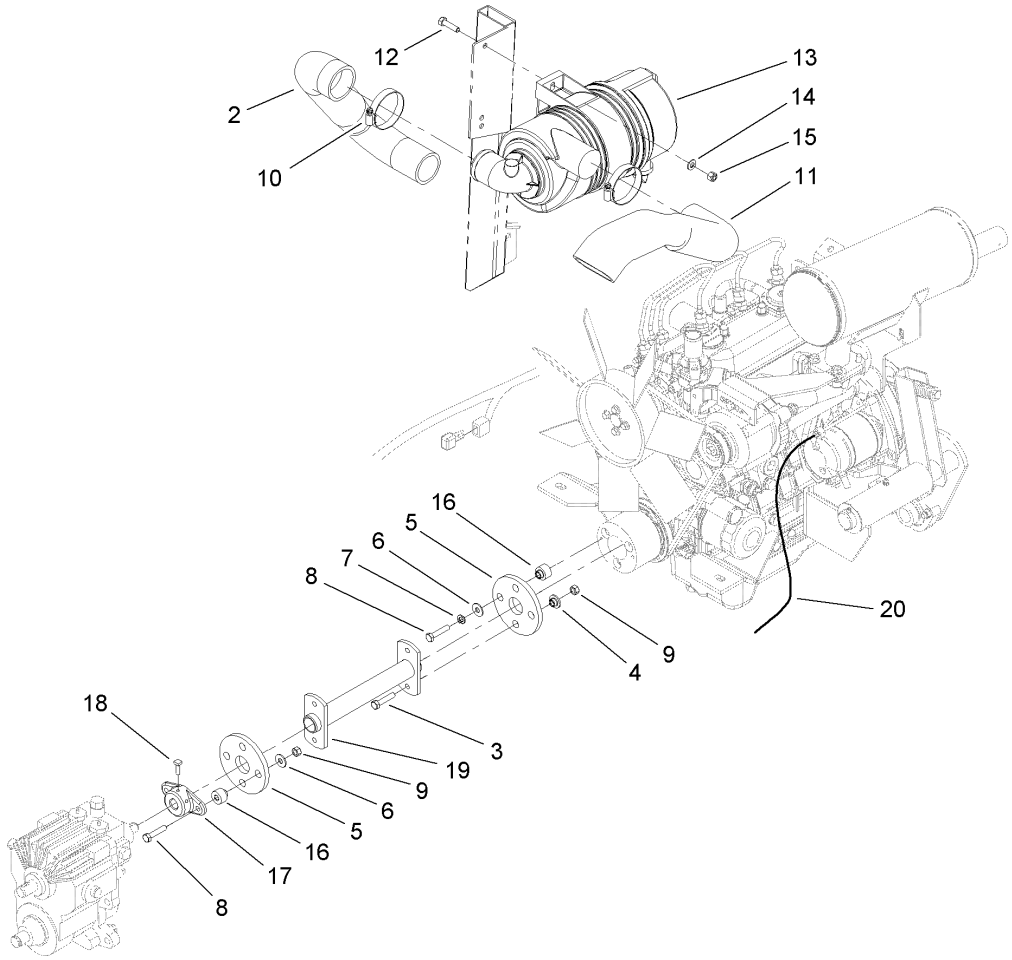


# Air Cleaner and Drive Coupling Assembly

| Ref | Part No. | Qty. | Description |
|---|---|---|---|
| 2 | 104-3446 | 1 | Hose-Outlet, Air |
| 3 | 3210-5 | 4 | Screw-HH |
| 4 | 27-6600 | 4 | Spacer-Coupling |
| 5 | 44-2230 | 2 | Coupling-Rubber |
| 6 | 3256-71 | 4 | Washer-Flat |
| 7 | 3253-4 | 2 | Washer-Lock |
| 8 | 3210-8 | 4 | Screw-HH |
| 9 | 32152-5 | 6 | Nut-Lock, Cone |
| 10 | 2412-42 | 3 | Clamp-Hose |
| 11 | 104-3444 | 1 | Hose-Inlet, Air |
| 12 | 322-6 | 2 | Screw-HH |
| 13 | 104-3427 | 1 | Air Cleaner ASM |
| 14 | 3256-23 | 2 | Washer-Flat |
| 15 | 3296-29 | 2 | Nut-Lock, NI |
| 16 | 27-6590 | 4 | Spacer-Coupling, Rubber |
| 17 | 27-4370 | 1 | Hub-Pump |
| 18 | 3241-6 | 2 | Screw-SQH |
| 19 | 104-3401-03 | 1 | Drive Shaft ASM |
| 20 | 99-3441 | 1 | Harness-Wire, Fusible Link |

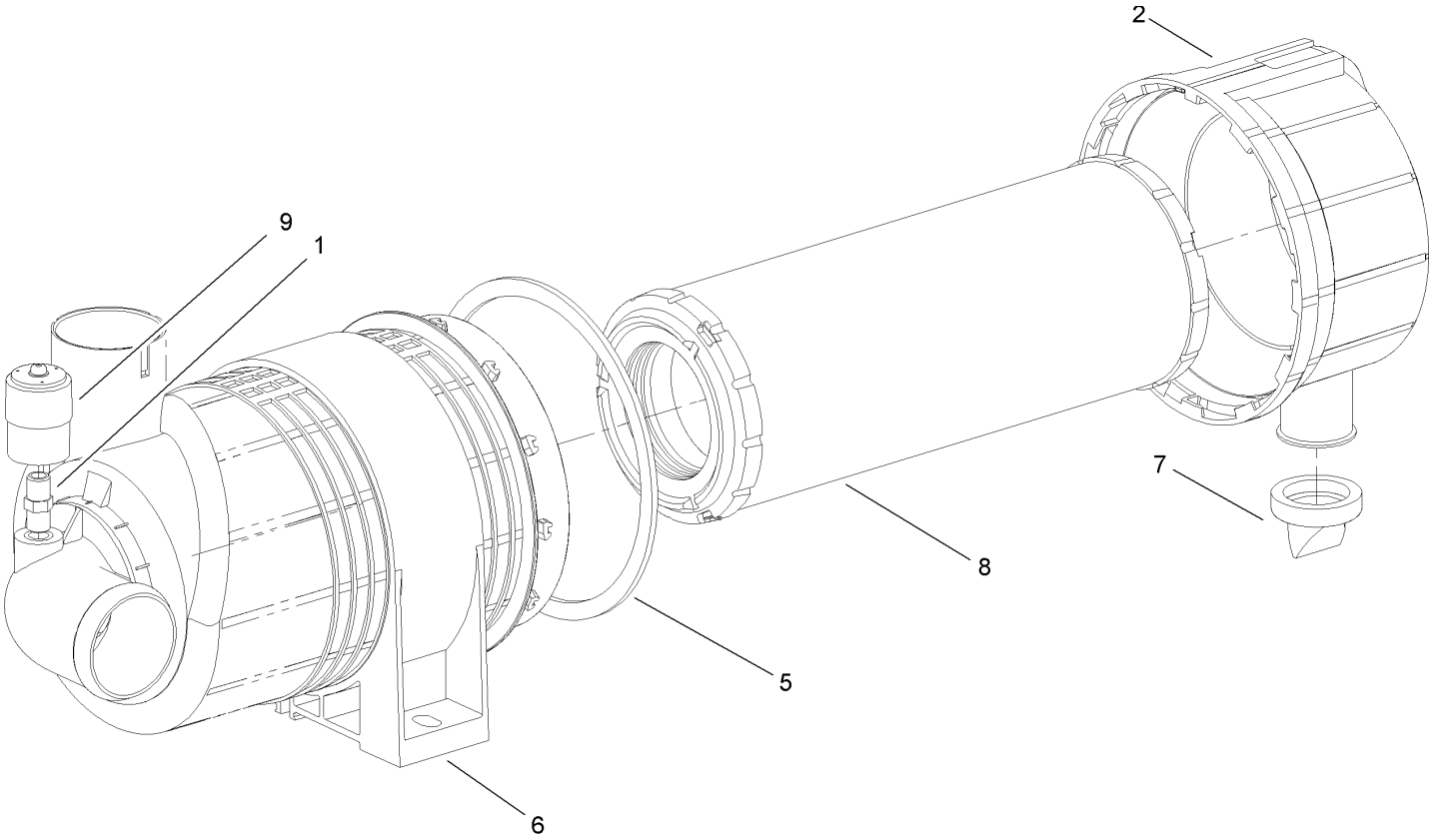


# Air Cleaner Assembly No. 104-3428

| Ref | Part No. | Qty. | Description |
|---|---|---|---|
| 1 | 105-4292 | 1 | Nipple-Pipe |
| 2 | 104-0497 | 1 | Cover ASM |
| 5 | 104-4897 | 1 | Gasket |
| 6 | 98-4525 | 1 | Bracket-Cleaner, Air |
| 7 | 104-0498 | 1 | Valve-Vacuator |
| 8 | 108-3810 | 1 | Filter-Air |
| 9 | 93-9164 | 1 | Indicator-Mini |

| | | | |
|---|---|---|---|
| | | | |

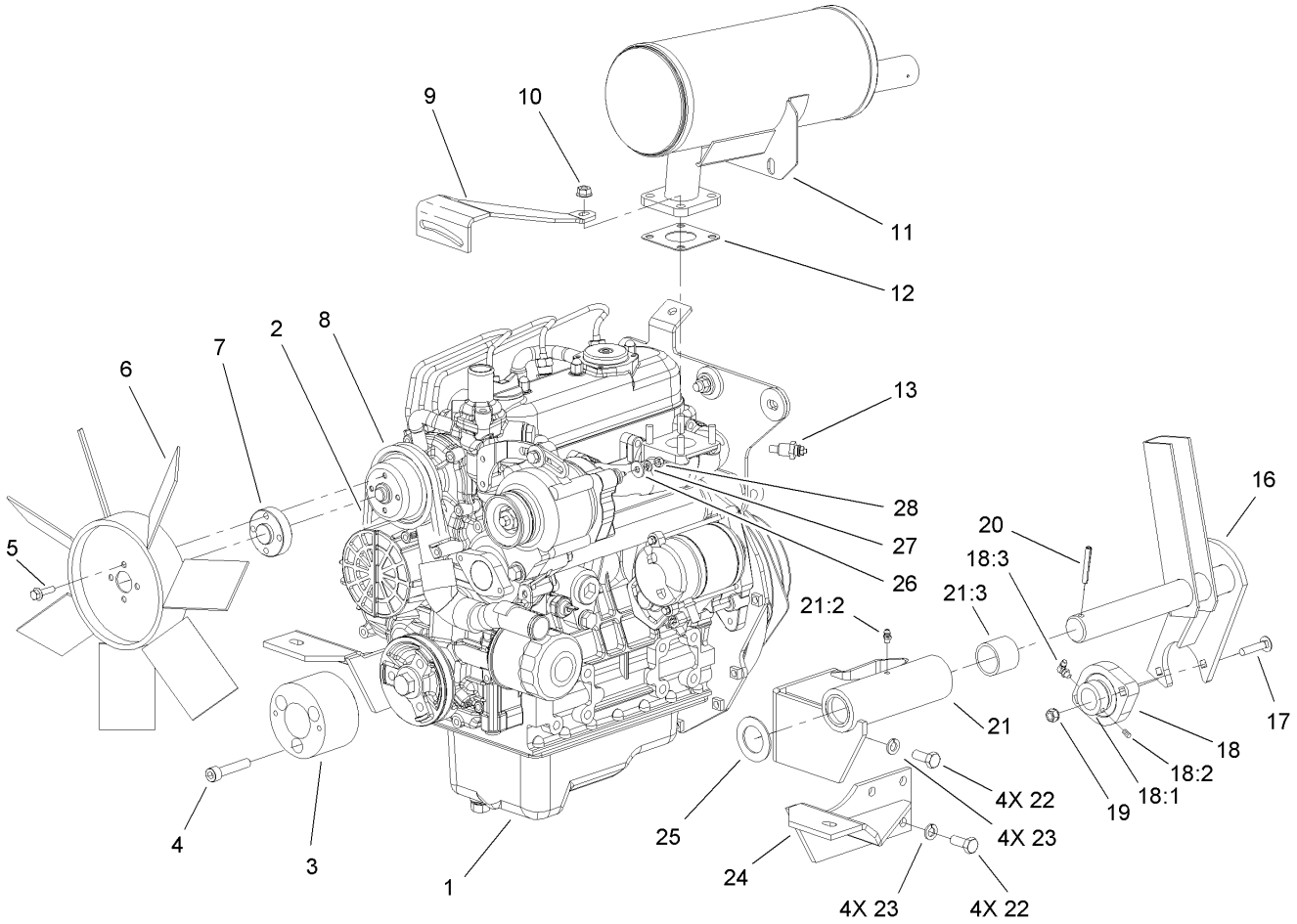


# Engine Assembly No. 1

| Ref | Part No. | Qty. | Description |
|---|---|---|---|
| 1 | 108-1361 | 1 | Engine-Kubota |
| 2 | 104-3494 | 1 | Belt-V |
| 3 | 104-1723 | 1 | Adapter-Front Drive |
| 4 | 3274-106 | 3 | Screw-HSH |
| 5 | 33103-020 | 4 | Screw-HHF |
| 6 | 104-4246 | 1 | Fan-Engine |
| 7 | 104-4247 | 1 | Spacer-Fan |
| 8 | 104-3497 | 1 | Pulley-Fan |
| 9 | 105-2556-03 | 1 | Brace-Alternator, Upper |
| 10 | 33004-00 | 4 | Nut-HF |
| 11 | 108-1363 | 1 | Muffler-Exhaust |
| 12 | 98-9611 | 1 | Gasket |
| 13 | 108-8682 | 1 | Thermoswitch |
| 16 | 106-4381-03 | 1 | PTO Tension Shaft ASM |
| 17 | 3230-4 | 2 | Screw-CARR |
| 18 | 92-8799 | 1 | Bearing-Flange |
| 18:1 | 251-77 | 1 | Collar-Lock, Bearing |
| 18:2 | 3245-35 | 1 | Screw-Set |
| 18:3 | 302-40 | 1 | Fitting-Grease |
| 19 | 32149-1 | 2 | Nut-Keps |
| 20 | 32121-32 | 1 | Pin-Roll |
| 21 | 104-3417 | 1 | LH Engine Mount ASM |
| 21:2 | 302-5 | 1 | Fitting-Grease |
| 21:3 | 256-299 | 2 | Bushing-Straight |

| Ref | Part No. | Qty. | Description |
|---|---|---|---|
| 22 | 43-0090 | 8 | Screw-HH |
| 23 | 42-9600 | 8 | Washer-Lock, Spring |
| 24 | 104-1702-03 | 1 | Engine Mount ASM |
| 25 | 3-4324 | 1 | Washer-Flat |
| 26 | 3256-22 | 1 | Washer-Flat |
| 27 | 43-5930 | 1 | Washer-Spring |
| 28 | 33013-00 | 1 | Nut-Hex |

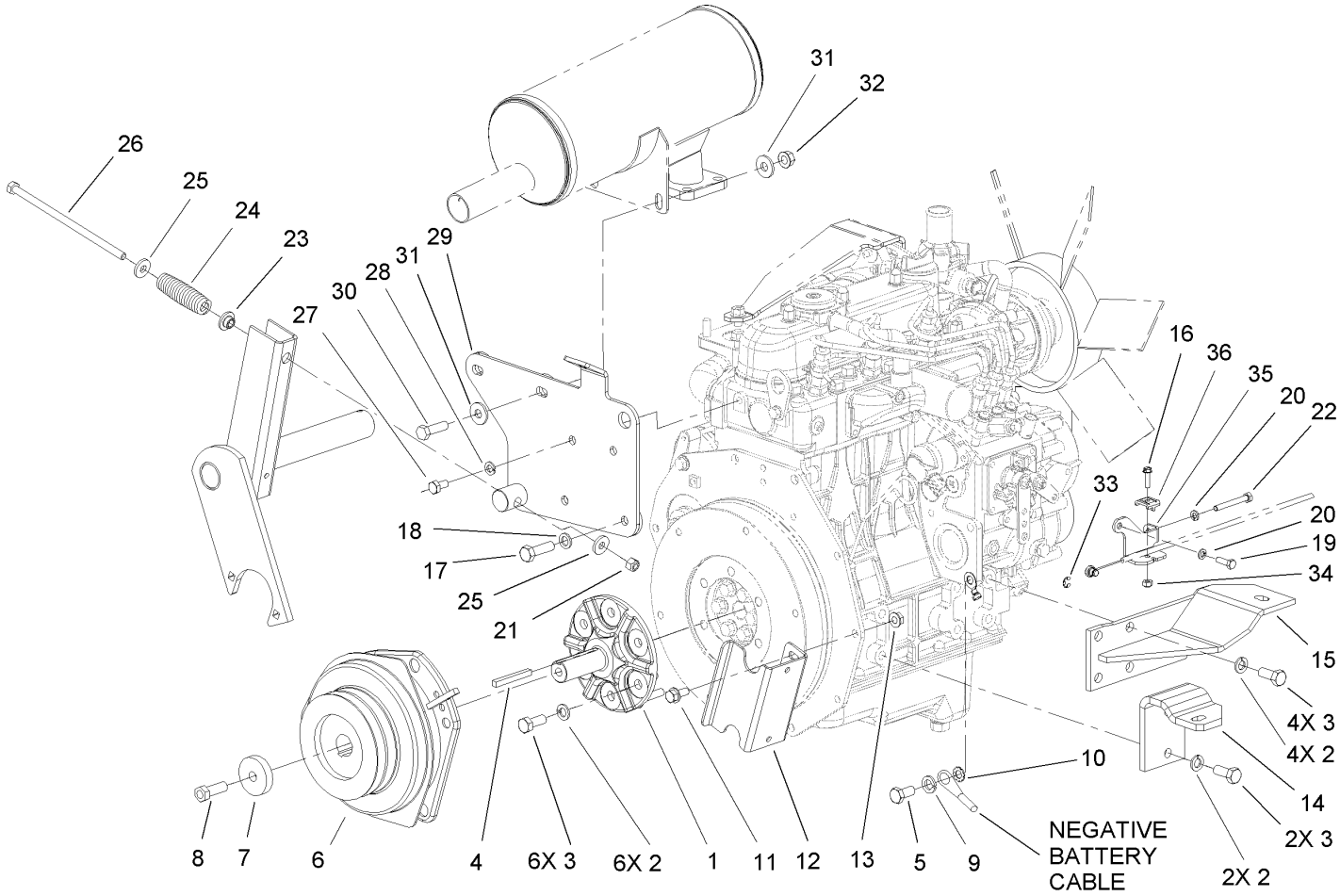


# Engine Assembly No. 2

| Ref | Part No. | Qty. | Description |
|---|---|---|---|
| 1 | 104-1715 | 1 | Hub-Clutch |
| 2 | 42-9600 | 12 | Washer-Lock, Spring |
| 3 | 43-0090 | 12 | Screw-HH |
| 4 | 63-8150 | 1 | Key-Square |
| 5 | 63-7790 | 1 | Screw-Cap |
| 6 | 107-9061 | 1 | Electric Clutch / Brake ASM |
| 7 | 105-3698 | 1 | Spacer |
| 8 | 3212-5 | 1 | Screw-HH |
| 9 | 3253-6 | 1 | Washer-Lock |
| 10 | 3255-9 | 1 | Washer-Lock |
| 11 | 3234-5 | 2 | Screw-HHF |
| 12 | 108-6586-03 | 1 | Stop-Clutch |
| 13 | 32128-25 | 2 | Nut-HF |
| 14 | 104-1713-03 | 1 | Mount-Engine |
| 15 | 104-1710-03 | 1 | Engine Mount ASM |
| 16 | 32105-13 | 1 | Screw-SHH |
| 17 | 56-2140 | 2 | Bolt |
| 18 | 48-9590 | 2 | Washer-Lock |
| 19 | 48-7630 | 1 | Screw |
| 20 | 48-8020 | 2 | Washer-Spring |
| 21 | 3296-29 | 1 | Nut-Lock, NI |
| 22 | 33113-050 | 1 | Screw-HH |
| 23 | 27-6600 | 1 | Spacer-Coupling |
| 24 | 21-0400-01 | 1 | Spring-Compression |

| Ref | Part No. | Qty. | Description |
|---|---|---|---|
| 25 | 4-2390 | 2 | Washer-Flat |
| 26 | 110-9696 | 1 | Bolt-HH |
| 27 | 33114-016 | 2 | Screw-HH |
| 28 | 3253-4 | 2 | Washer-Lock |
| 29 | 108-6561-03 | 1 | Muffler Mount ASM |
| 30 | 323-44 | 2 | Screw-HH |
| 31 | 80-6990 | 4 | Washer-Hardened |
| 32 | 32128-21 | 2 | Nut-HF |
| 33 | 701197 | 1 | E-Ring |
| 34 | 3296-2 | 1 | Nut-Lock |
| 35 | 110-9682-03 | 1 | Bracket-Throttle |
| 36 | 81-1690 | 1 | Clamp-Cable |

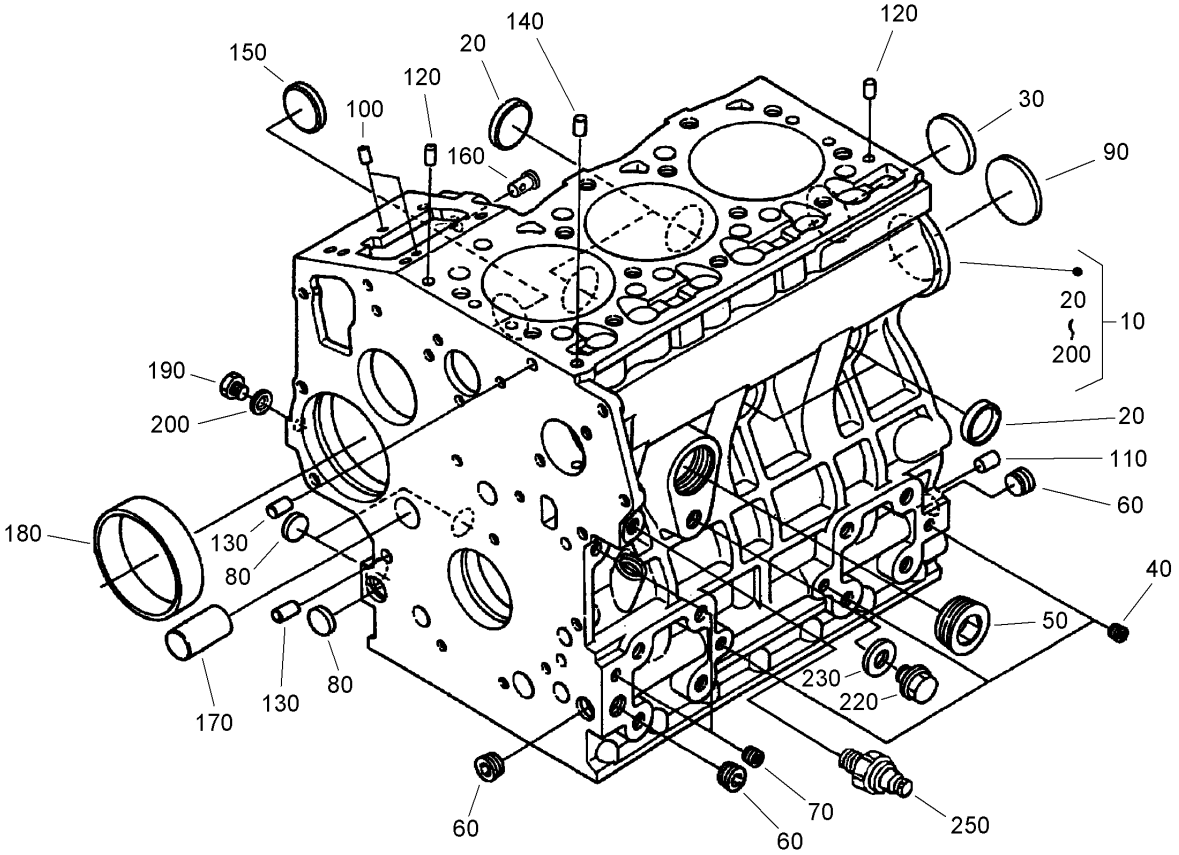


# Crankcase Assembly

| Ref | Part No. | Qty. | Description |
|---|---|---|---|
| 10 | 108-6571 | 1 | Crankcase ASM |
| 20 | 98-9398 | 4 | Cap-Sealing |
| 30 | 98-7539 | 1 | Cap-Sealing |
| 40 | 98-7540 | 3 | Plug |
| 50 | 105-3779 | 1 | Plug |
| 60 | 98-9597 | 3 | Plug |
| 70 | 98-7487 | 2 | Plug |
| 80 | 98-7489 | 3 | Plug |
| 90 | 98-9668 | 1 | Plug |
| 100 | 98-9375 | 2 | Pin-Straight |
| 110 | 98-9377 | 2 | Pin-Straight |
| 120 | 105-3795 | 2 | Pin-Straight |
| 130 | 98-9387 | 2 | Pin-Pipe |
| 140 | 98-9539 | 1 | Pin-Pipe |
| 150 | 98-9599 | 1 | Plug |
| 160 | 98-9630 | 1 | Pin-Spring, Start |
| 170 | 98-9675 | 1 | Plug |
| 180 | 98-9656 | 1 | Bushing-Governor, Gear |
| 190 | 98-7507 | 1 | Plug |
| 200 | 98-7428 | 1 | Gasket |
| 220 | 99-3447 | 1 | Plug |
| 230 | 106-7056 | 1 | Gasket |
| 250 | 98-9416 | 1 | Switch-Oil |

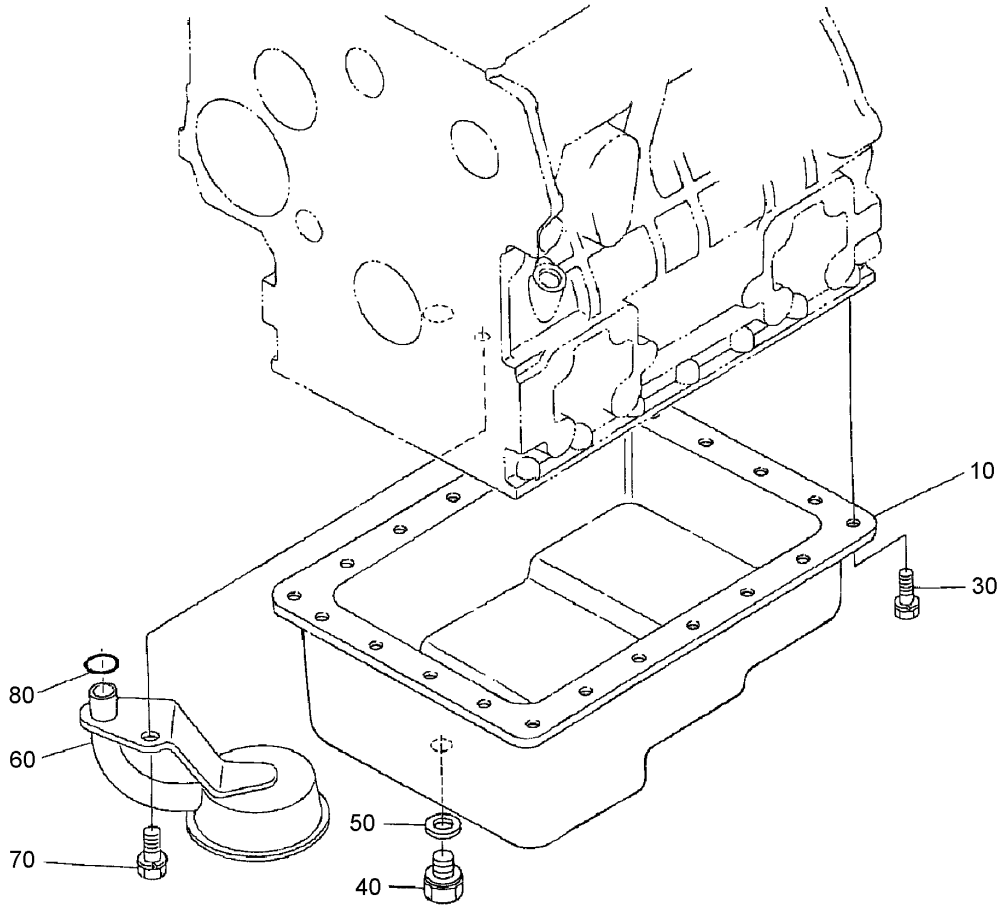


# Oil Pan Assembly

| Ref | Part No. | Qty. | Description |
|---|---|---|---|
| 10 | 104-3495 | 1 | Pan-Oil |
| 30 | 107-9065 | 22 | Bolt |
| 40 | 108-6572 | 1 | Plug-Drain |
| 50 | 98-7524 | 1 | Gasket |
| 60 | 104-3496 | 1 | Filter-Oil Pickup |
| 70 | 98-7526 | 1 | Bolt |
| 80 | 105-3776 | 1 | O-Ring |

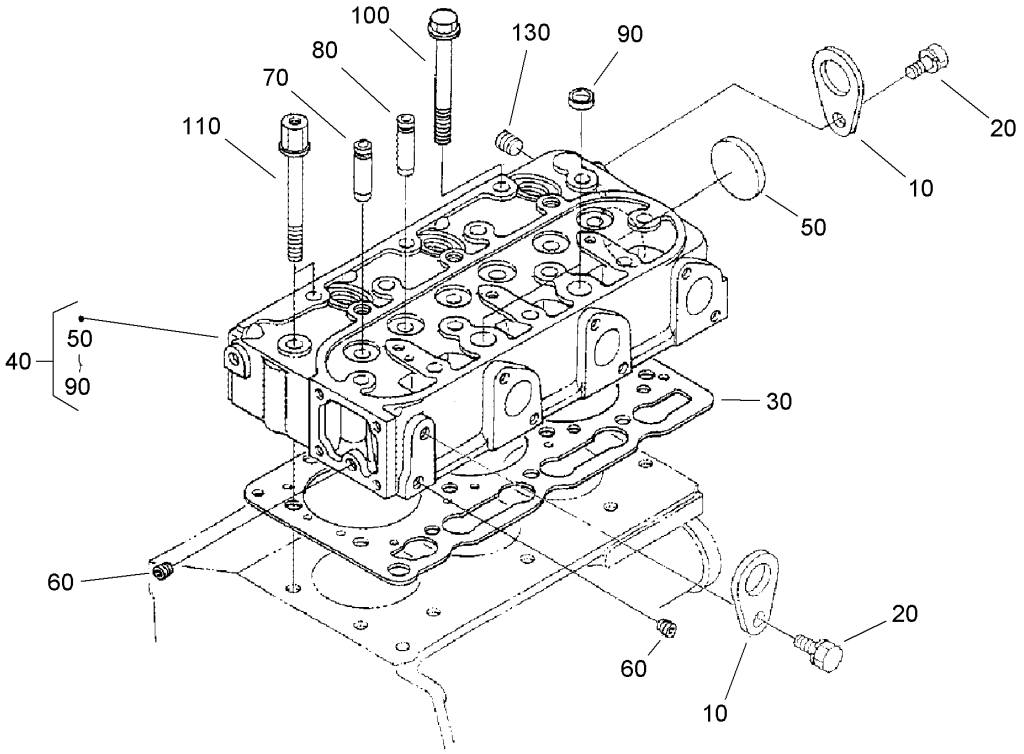


# Cylinder Head Assembly

| Ref | Part No. | Qty. | Description |
|---|---|---|---|
| 10 | 98-7531 | 2 | Hook-Engine |
| 20 | 100-9195 | 2 | Bolt |
| 30 | 108-6573 | 1 | Gasket-Head, Cylinder |
| 40 | 108-6574 | 1 | Cylinder Head ASM |
| 50 | 98-9395 | 1 | Cap-Sealing |
| 60 | 98-7540 | 2 | Plug |
| 70 | 107-9066 | 3 | Guide-Valve, Inlet |
| 80 | 107-9067 | 3 | Guide-Valve, Exhaust |
| 90 | 98-9389 | 2 | Cap-Sealing |
| 100 | 98-9479 | 1 | Bolt-Head, Cylinder |
| 110 | 98-9647 | 2 | Bolt-Head, Cylinder |
| 130 | 98-9444 | 1 | Plug |

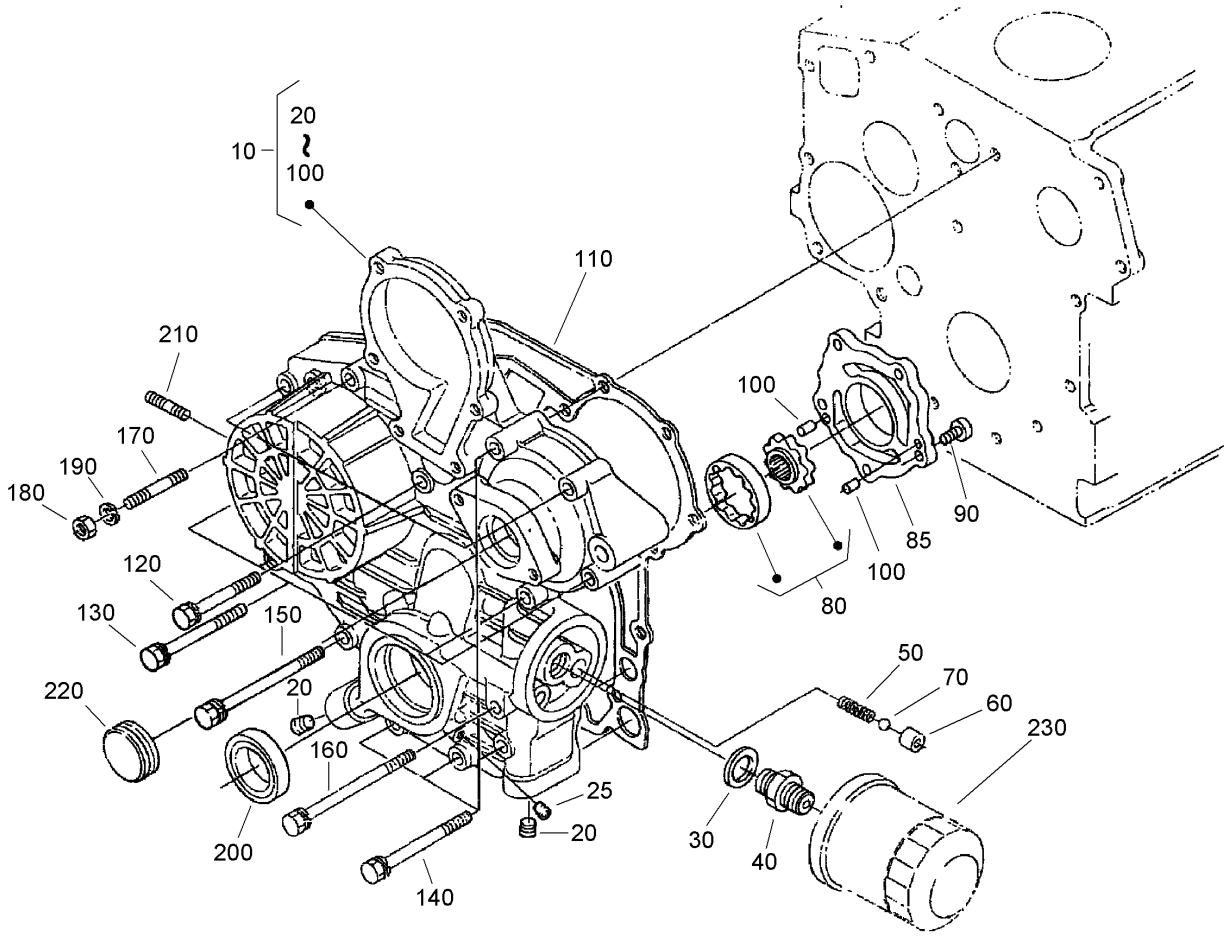


# Gear Case Assembly

| Ref | Part No. | Qty. | Description |
|---|---|---|---|
| 10 | 107-9068 | 1 | Gear Case ASM |
| 20 | 98-9598 | 2 | Plug |
| 25 | 98-7487 | 1 | Plug |
| 30 | 98-7562 | 1 | Washer-Plain |
| 40 | 98-9388 | 1 | Joint-Pipe |
| 50 | 98-9544 | 1 | Spring |
| 60 | 98-9543 | 1 | Seat-Valve |
| 70 | 98-9380 | 1 | Ball |
| 80 | 98-9540 | 1 | Oil Pump Rotor ASM |
| 85 | 107-9069 | 1 | Cover-Pump, Oil |
| 90 | 107-9071 | 5 | Screw |
| 100 | 107-9072 | 2 | Pin-Straight |
| 110 | 98-9633 | 1 | Gasket-Case, Gear |
| 120 | 107-9073 | 3 | Bolt |
| 130 | 105-3797 | 4 | Bolt |
| 140 | 98-9356 | 4 | Bolt |
| 150 | 107-9074 | 1 | Bolt |
| 160 | 98-9586 | 1 | Bolt |
| 170 | 105-3709 | 1 | Stud |
| 180 | 98-7572 | 1 | Nut |
| 190 | 98-7699 | 1 | Washer-Spring |
| 200 | 98-9482 | 1 | Seal-Oil |
| 210 | 105-3710 | 2 | Stud |
| 220 | 98-9641 | 1 | Cover |

| Ref | Part No. | Qty. | Description |
|---|---|---|---|
| 230 | 108-3841 | 1 | Filter-Oil |

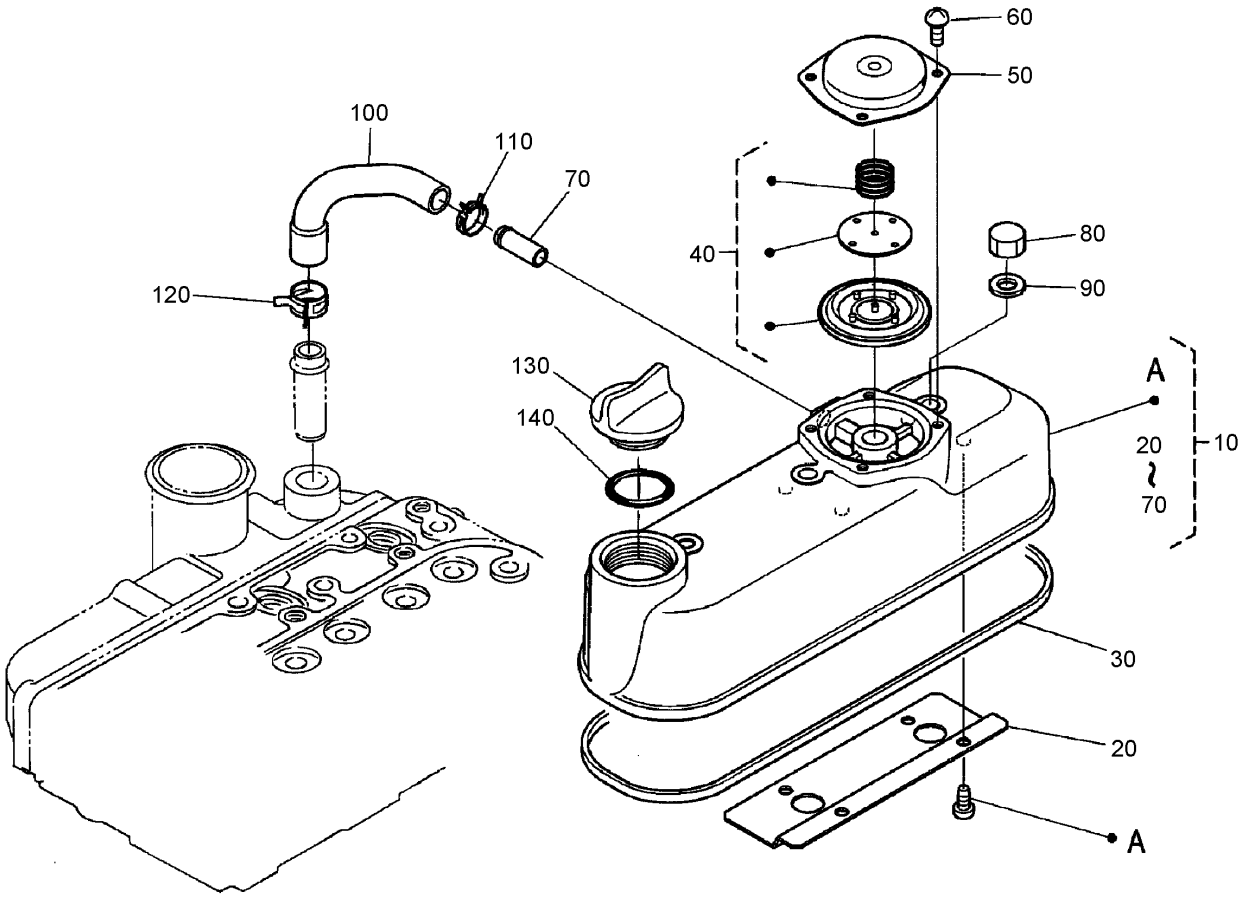


# Head Cover Assembly

| Ref | Part No. | Qty. | Description |
|---|---|---|---|
| 10 | 108-6575 | 1 | Cylinder Head Cover ASM |
| 20 | 108-2857 | 1 | Shield-Breather |
| 30 | 98-9615 | 1 | Gasket-Cover, Head |
| 40 | 108-2861 | 1 | Breather Valve ASM |
| 50 | 108-2862 | 1 | Cover-Breather |
| 60 | 108-2863 | 4 | Screw-PPH |
| 70 | 98-7766 | 1 | Pipe-Return, Water |
| 80 | 98-9455 | 3 | Nut-Cap |
| 90 | 98-9454 | 3 | Gasket |
| 100 | 108-2858 | 1 | Tube-Beather |
| 110 | 108-2859 | 1 | Clamp-Hose |
| 120 | 108-2860 | 1 | Clamp-Hose |
| 130 | 107-9075 | 1 | Plug-Filler, Oil |
| 140 | 99-3446 | 1 | O-Ring |

| | | | |
|---|---|---|---|
| | | | |

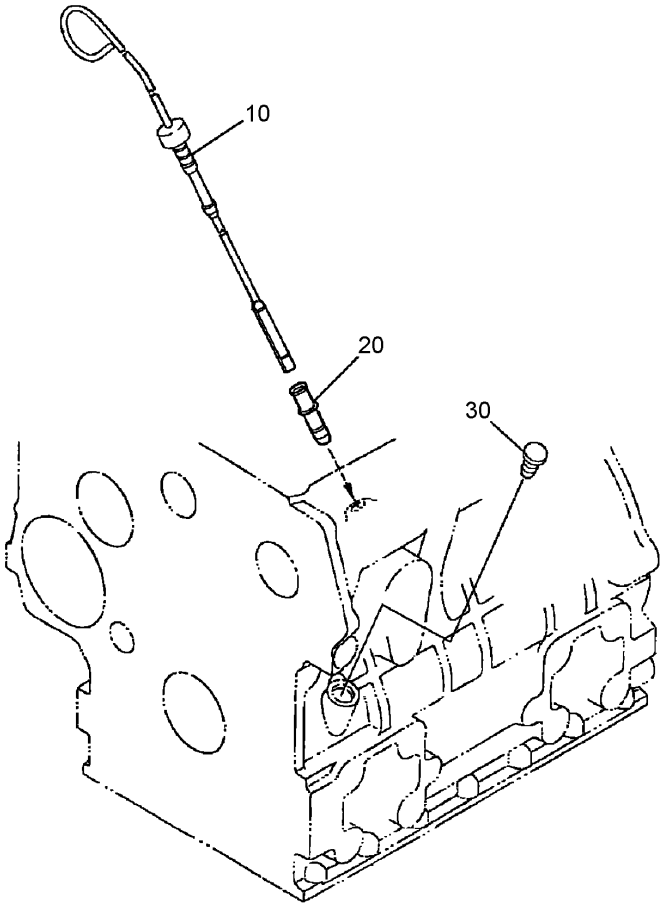


# Dipstick and Guide Assembly

| Ref | Part No. | Qty. | Description |
|---|---|---|---|
| 10 | 107-9076 | 1 | Gauge-Oil |
| 20 | 105-3713 | 1 | Guide-Gauge, Oil |
| 30 | 105-3715 | 1 | Plug-Gauge, Oil |

| | | | |
|---|---|---|---|
| | | | |

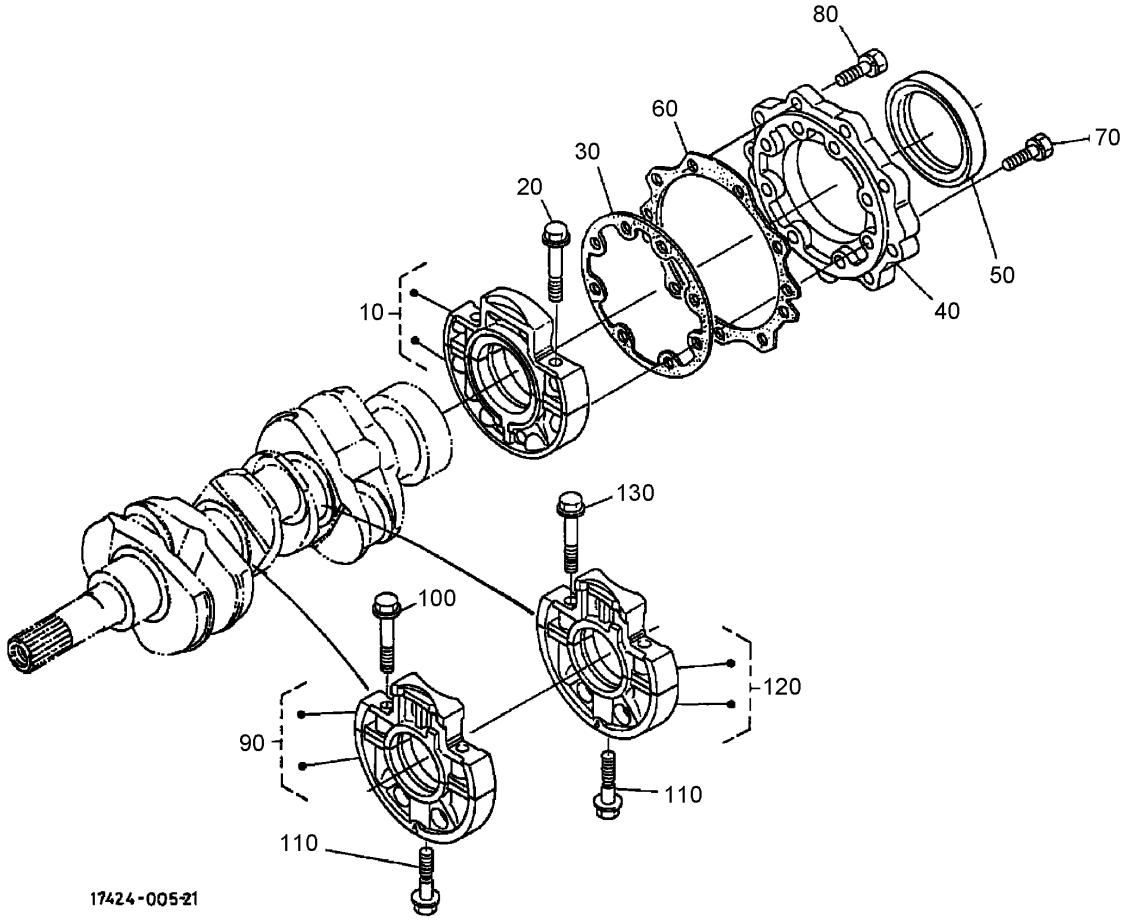


# Main Bearing Case Assembly

| Ref | Part No. | Qty. | Description |
|---|---|---|---|
| 10 | 98-9480 | 1 | Main Bearing Case ASM |
| 20 | 98-9484 | 6 | Bolt-Case, Bearing |
| 30 | 98-9634 | 1 | Gasket-Case, Bearing |
| 40 | 98-9487 | 1 | Cover-Case, Bearing |
| 50 | 98-9483 | 1 | Seal-Oil |
| 60 | 98-9635 | 1 | Gasket-Cover, Bearing Case |
| 70 | 98-9352 | 8 | Bolt |
| 80 | 98-7568 | 9 | Bolt |
| 90 | 98-9606 | 1 | Main Bearing Case ASM |
| 100 | 98-9484 | 2 | Bolt-Case, Bearing |
| 110 | 98-9485 | 2 | Bolt-Case, Bearing |
| 120 | 98-9607 | 1 | Main Bearing Case ASM |
| 130 | 98-9484 | 2 | Bolt-Case, Bearing |

| | | | |
|---|---|---|---|
| | | | |

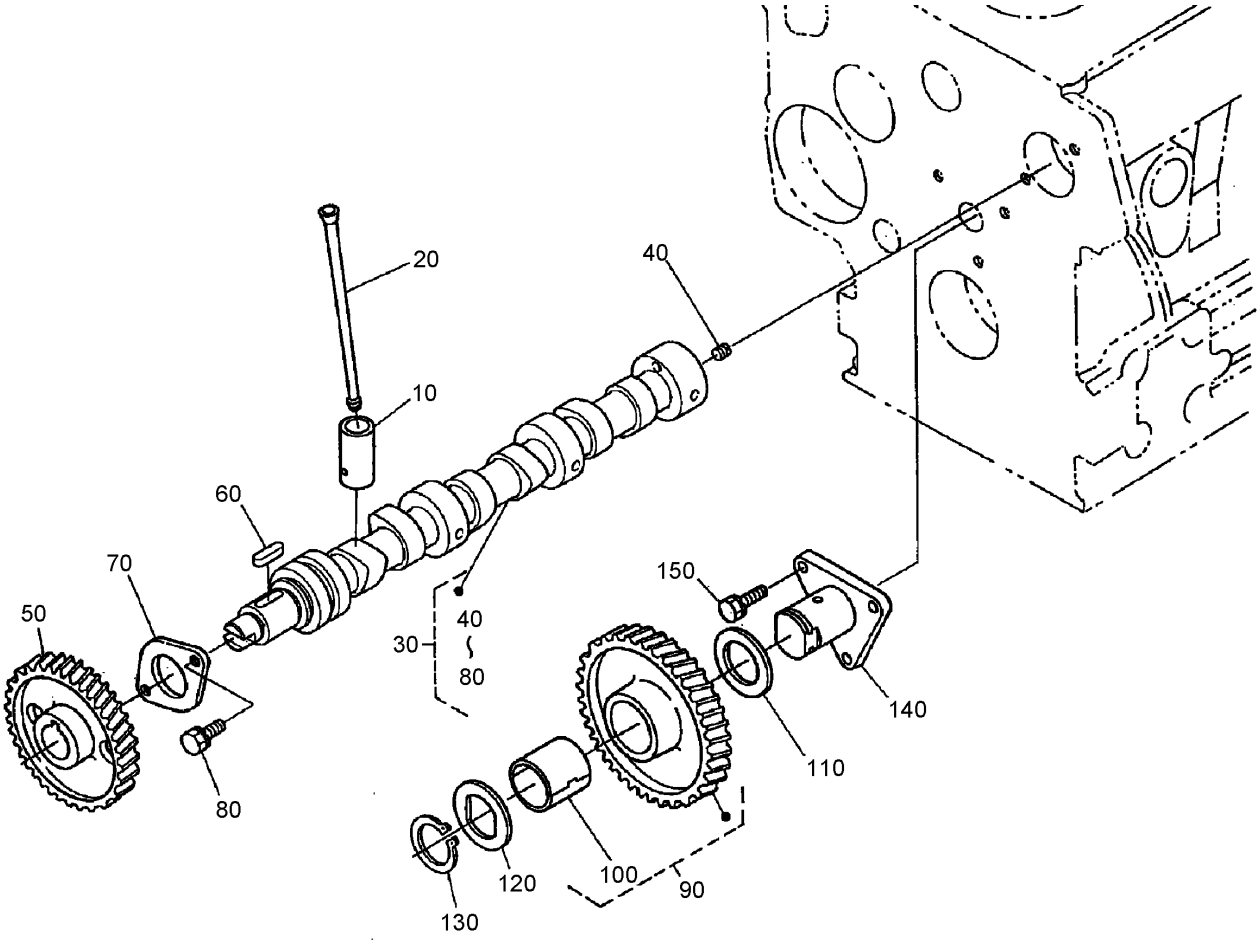


# Camshaft and Idle Gear Shaft Assembly

| Ref | Part No. | Qty. | Description |
|---|---|---|---|
| 10 | 98-9616 | 6 | Tappet |
| 20 | 98-9509 | 6 | Rod-Push |
| 30 | 108-6576 | 1 | Camshaft ASM |
| 40 | 98-7449 | 1 | Screw-Set |
| 50 | 98-9512 | 1 | Gear-Cam |
| 60 | 98-9378 | 1 | Key-Feather |
| 70 | 98-9510 | 1 | Stopper-Camshaft |
| 80 | 98-9351 | 2 | Bolt |
| 90 | 98-9649 | 1 | Idle Gear ASM |
| 100 | 98-9650 | 1 | Bushing-Gear, Idle |
| 110 | 98-9535 | 1 | Collar-Gear, Idle |
| 120 | 98-9536 | 1 | Collar-Gear, Idle |
| 130 | 98-9534 | 1 | Clip-Circular, Idle Gear |
| 140 | 98-9533 | 1 | Shaft-Gear, Idle |
| 150 | 98-7692 | 3 | Bolt |

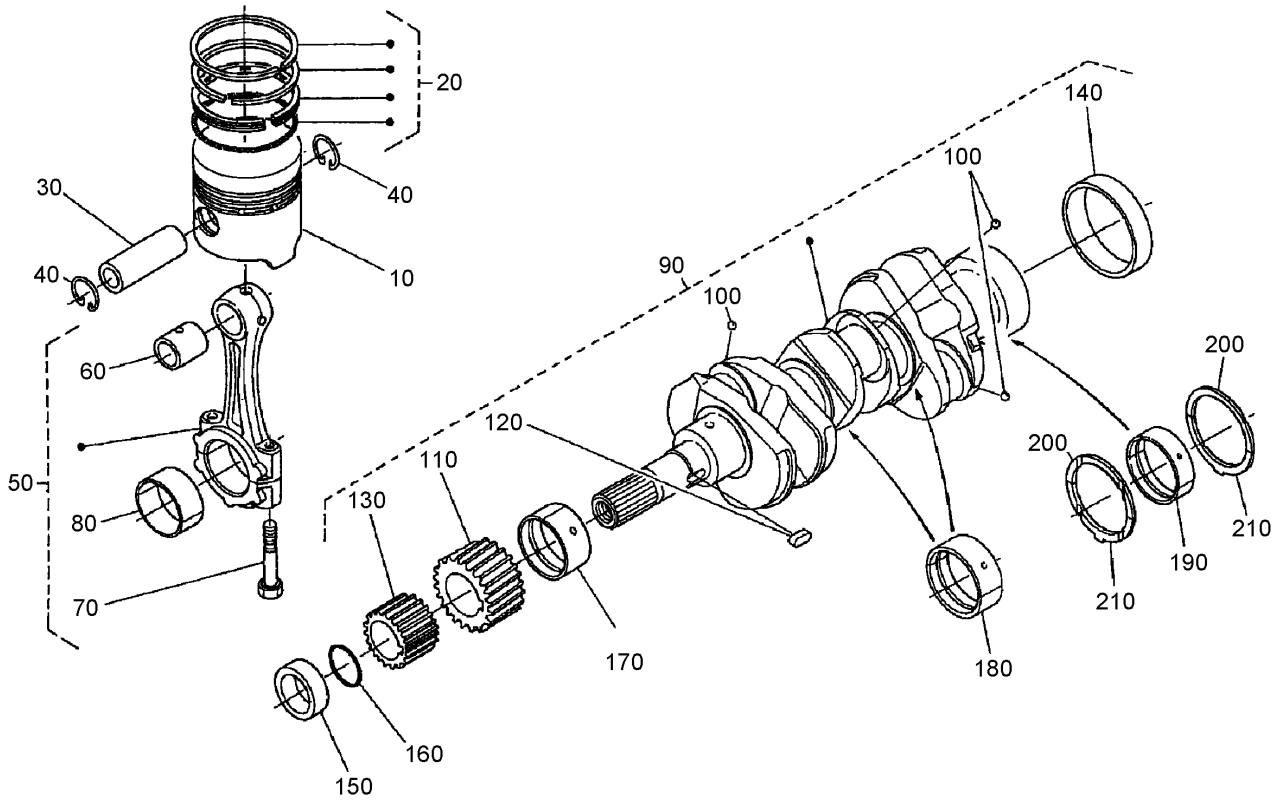


# Piston and Crankshaft Assembly

| Ref | Part No. | Qty. | Description |
|---|---|---|---|
| 10 | 98-9470 | 3 | Piston (0.5Mm) |
| 10 | 98-9469 | 3 | Piston (STD) |
| 20 | 98-9619 | 3 | Piston Ring ASM (0.5Mm) |
| 20 | 98-9618 | 3 | Piston Ring ASM (STD) |
| 30 | 98-9513 | 3 | Pin-Piston |
| 40 | 98-9514 | 6 | Clip-Circular, Piston Pin |
| 50 | 98-9516 | 3 | Connecting Rod ASM |
| 60 | 98-9515 | 3 | Bushing-Pin, Piston |
| 70 | 98-9517 | 6 | Bolt-Rod, Connecting |
| 80 | 98-9520 | 3 | Bearing-Rod (0.4Mm) |
| 80 | 98-9519 | 3 | Bearing-Rod (0.2Mm) |
| 80 | 98-9518 | 3 | Metal-Crankpin (STD) |
| 90 | 98-9642 | 1 | Crankshaft ASM |
| 100 | 98-7473 | 3 | Ball |
| 110 | 98-9532 | 1 | Gear-Crankshaft |
| 120 | 98-9666 | 1 | Key |
| 130 | 98-9542 | 1 | Gear-Drive, Oil Pump |
| 140 | 98-9522 | 1 | Sleeve-Crankshaft |
| 150 | 98-9521 | 1 | Collar-Crankshaft |
| 160 | 105-3783 | 1 | O-Ring |
| 170 | 98-9523 | 1 | Metal Crankshaft (STD) |
| 170 | 98-9528 | 1 | Bearing-Main (0.2Mm) |
| 170 | 98-9529 | 1 | Bearing-Main (0.4Mm) |
| 180 | 98-9524 | 2 | Metal-Crankshaft (STD Set) |

| Ref | Part No. | Qty. | Description |
|---|---|---|---|
| 180 | 98-9530 | 2 | Bearing-Main (0.2Mm) |
| 180 | 98-9531 | 2 | Bearing-Main (0.4Mm) |
| 190 | 98-9556 | 1 | Bearing-Main (STD) |
| 190 | 105-3719 | 1 | Metal-Crankshaft (.2Mm) |
| 190 | 105-3720 | 1 | Metal-Crankshaft (.4Mm) |
| 200 | 98-9413 | 2 | Bearing-Thrust (STD) |
| 200 | 98-9414 | 2 | Bearing-Thrust (0.2Mm) |
| 200 | 98-9415 | 2 | Bearing-Thrust (0.4Mm) |
| 210 | 98-9688 | 2 | Bearing-Thrust (STD) |
| 210 | 98-9689 | 2 | Bearing-Thrust (0.2Mm) |
| 210 | 98-9690 | 2 | Bearing-Thrust (0.4Mm) |

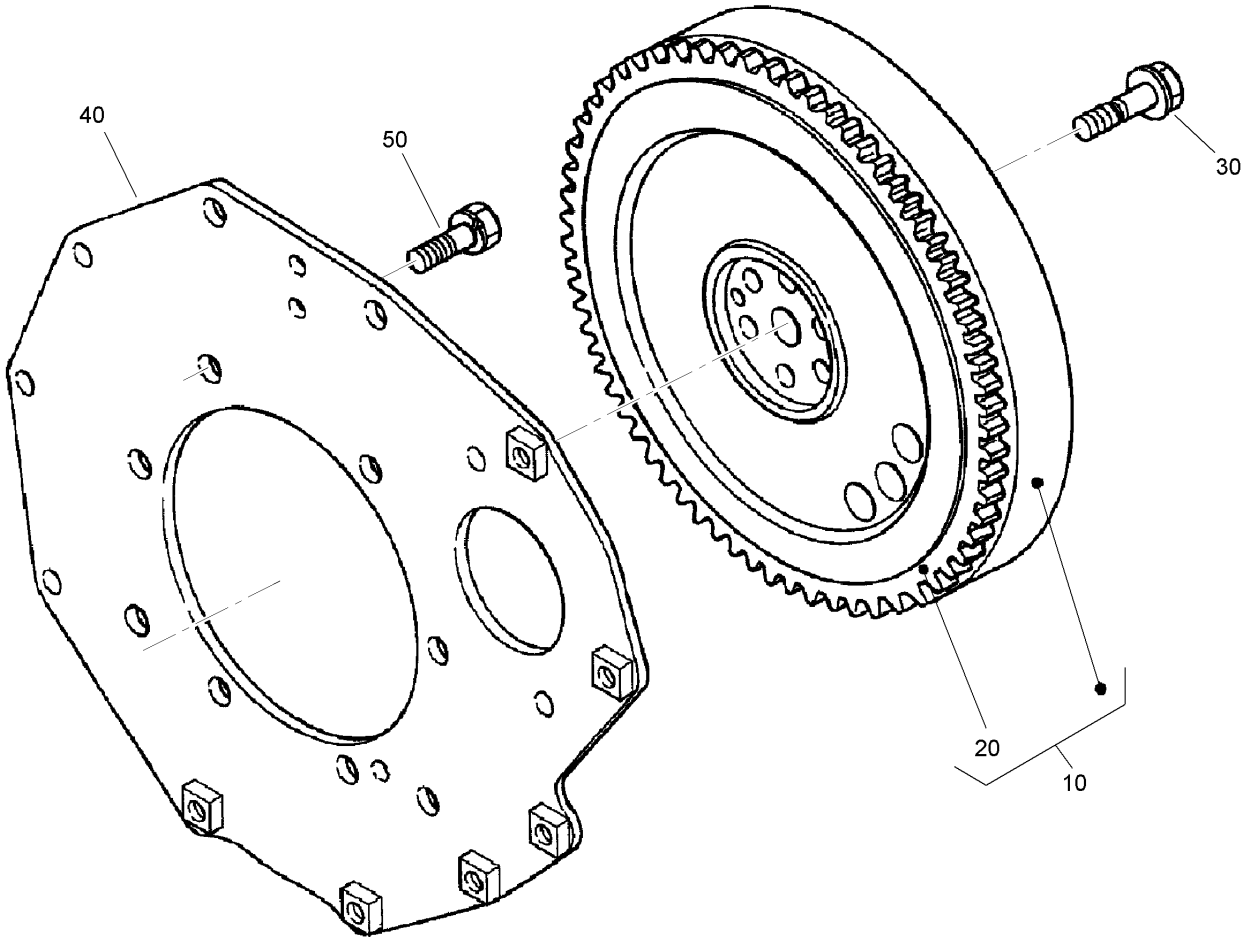


# Flywheel Assembly

| Ref | Part No. | Qty. | Description |
|---|---|---|---|
| 10 | 105-3784 | 1 | Flywheel ASM |
| 20 | 105-3722 | 1 | Gear-Ring |
| 30 | 98-9537 | 6 | Bolt-Flywheel |
| 40 | 98-9486 | 1 | Plate-End, Rear |
| 50 | 98-9392 | 8 | Bolt |

| | | | |
|---|---|---|---|
| | | | |

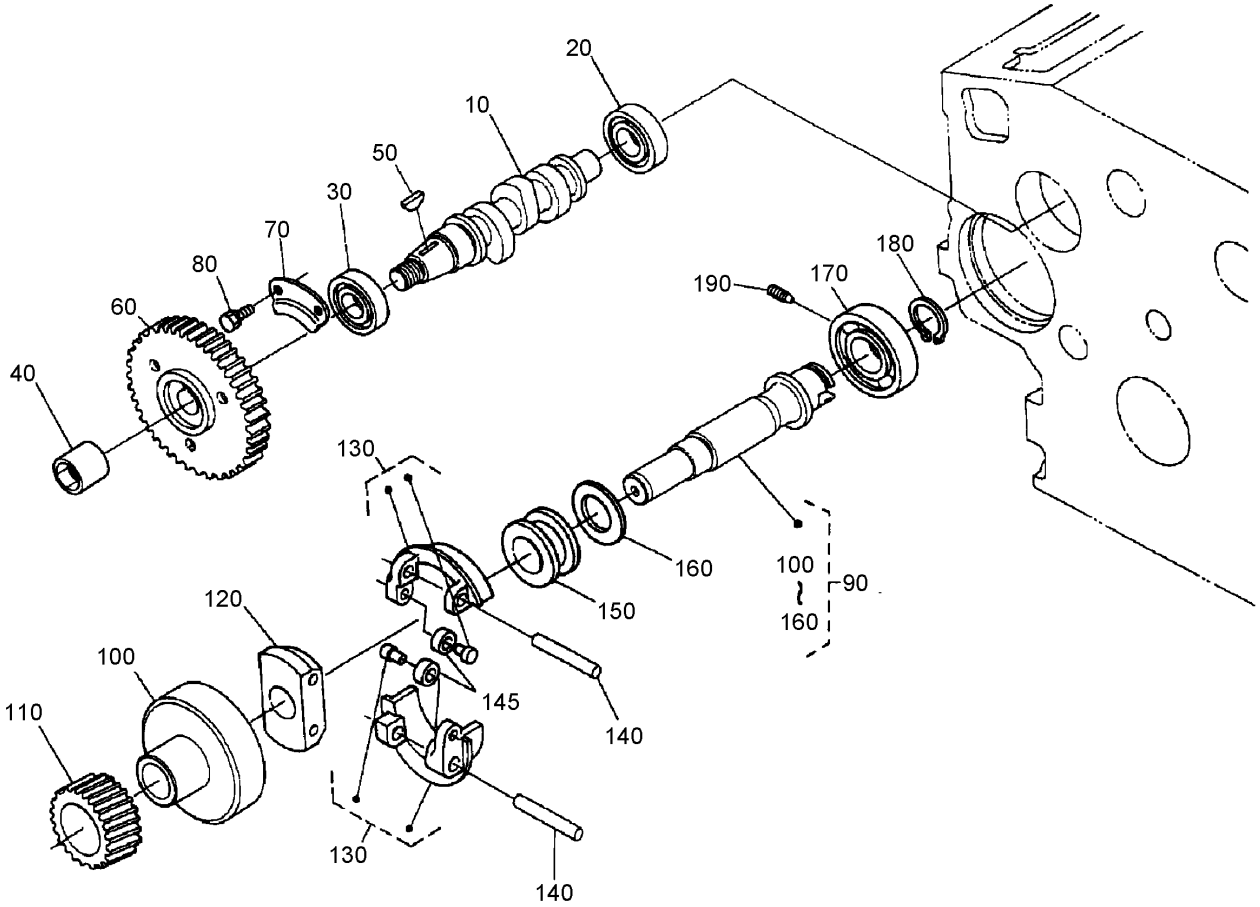


# Fuel Camshaft and Governor Shaft Assembly

| Ref | Part No. | Qty. | Description |
|---|---|---|---|
| 10 | 98-9459 | 1 | Camshaft-Fuel |
| 20 | 107-9077 | 1 | Bearing-Ball |
| 30 | 107-9078 | 1 | Bearing-Ball |
| 40 | 98-9590 | 1 | Nut-Cap |
| 50 | 98-9595 | 1 | Key-Woodruff |
| 60 | 98-9669 | 1 | Gear-Pump, Injection |
| 70 | 98-9511 | 1 | Stopper-Fuel, Camshaft |
| 80 | 98-9350 | 2 | Bolt |
| 90 | 98-9644 | 1 | Governor Shaft ASM |
| 100 | 98-9562 | 1 | Holder-Gear, Governor |
| 110 | 98-9673 | 1 | Gear-Governor |
| 120 | 98-9561 | 1 | Holder-Weight, Governor |
| 130 | 98-9559 | 2 | Governor Weight ASM |
| 140 | 98-9560 | 2 | Shaft-Weight, Governor |
| 145 | 98-9692 | 2 | Roller |
| 150 | 98-9563 | 1 | Sleeve-Governor |
| 160 | 98-9564 | 1 | Washer-Thrust |
| 170 | 107-9079 | 1 | Bearing-Ball |
| 180 | 98-9657 | 1 | Clip-Circular, Governor Shaft |
| 190 | 98-9565 | 1 | Screw-Set |

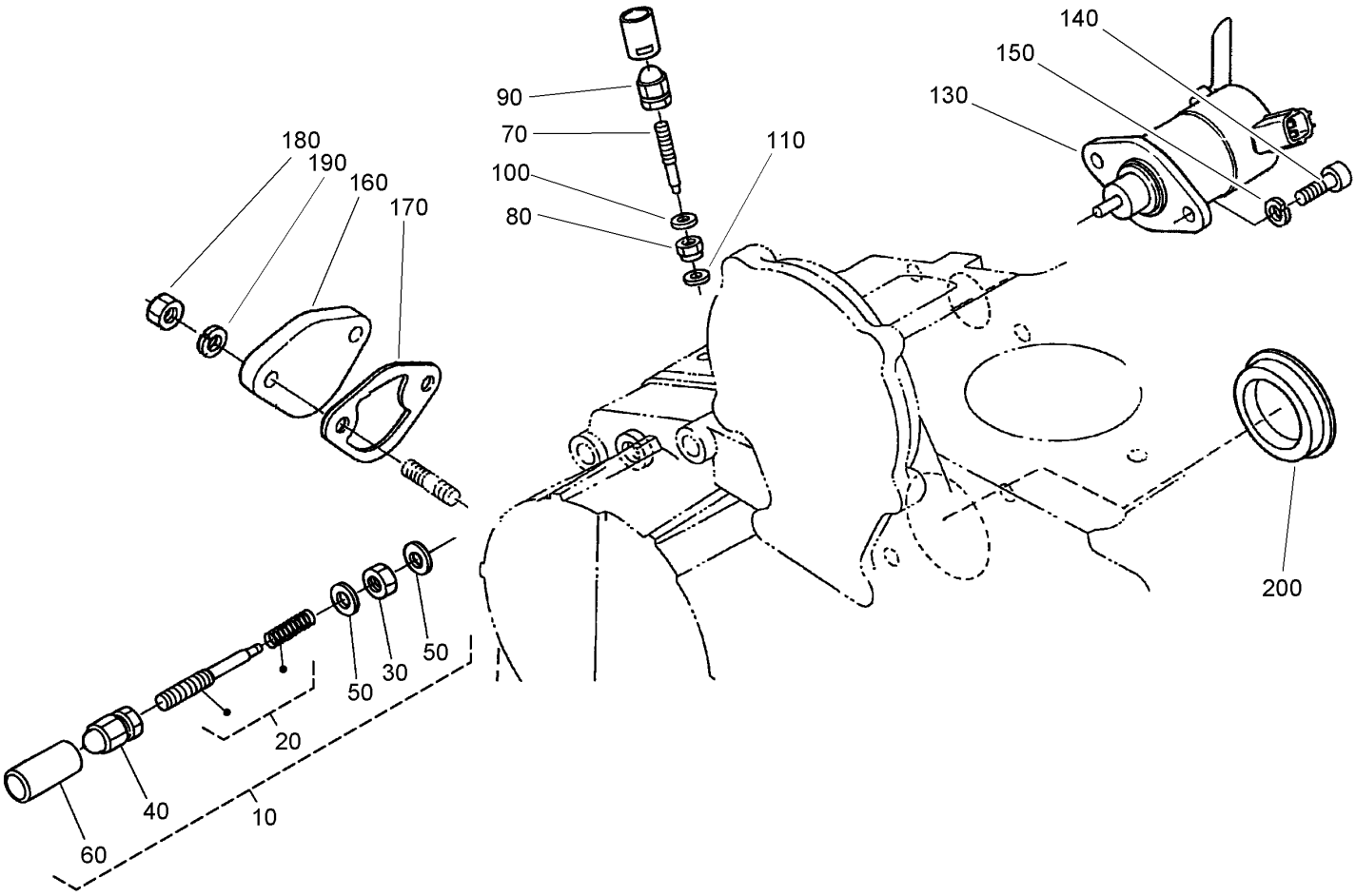


# Idle Apparatus Assembly

| Ref | Part No. | Qty. | Description |
|---|---|---|---|
| 10 | 98-9678 | 1 | Idle Apparatus ASM |
| 20 | 98-9679 | 1 | Adjusting Bolt ASM |
| 30 | 98-9439 | 1 | Nut |
| 40 | 99-8387 | 1 | Nut-Cap |
| 50 | 98-7654 | 2 | Gasket |
| 60 | 98-7656 | 1 | Cap |
| 70 | 98-9557 | 1 | Bolt-Adjusting |
| 80 | 99-3512 | 1 | Nut |
| 90 | 99-8387 | 1 | Nut-Cap |
| 100 | 98-7654 | 1 | Gasket |
| 110 | 107-9081 | 1 | Gasket |
| 130 | 104-5155 | 1 | Solenoid-Stop |
| 140 | 105-3799 | 2 | Bolt-HSH |
| 150 | 98-7699 | 2 | Washer-Spring |
| 160 | 99-3514 | 1 | Cover |
| 170 | 98-9636 | 1 | Gasket-Pump, Fuel |
| 180 | 98-7572 | 2 | Nut |
| 190 | 98-7699 | 2 | Washer-Spring |
| 200 | 98-9640 | 1 | Cover-Pump |

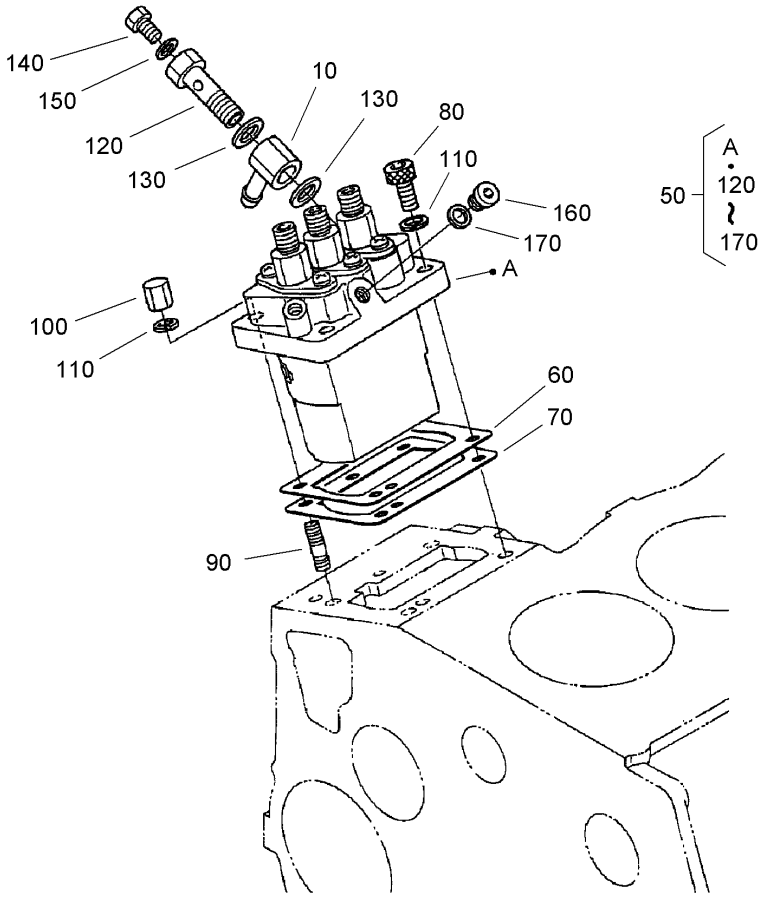


# Injection Pump Assembly

| Ref | Part No. | Qty. | Description |
|---|---|---|---|
| 10 | 98-9596 | 1 | Joint-Eye |
| 50 | 98-9643 | 1 | Injection Pump ASM |
| 60 | 98-9457 | 1 | Shim-Injection (0.25Mm) |
| 60 | 98-9456 | 1 | Shim (0.2Mm) |
| 70 | 98-9458 | 1 | Shim-Injection (0.30Mm) |
| 80 | 98-9361 | 2 | Bolt-HSH |
| 90 | 98-9438 | 2 | Stud |
| 100 | 98-9440 | 2 | Nut-Cap |
| 110 | 98-7699 | 4 | Washer-Spring |
| 120 | 98-9464 | 1 | Bolt-Joint |
| 130 | 98-9445 | 2 | Gasket |
| 140 | 98-9430 | 1 | Screw |
| 150 | 98-9446 | 1 | Gasket |
| 160 | 98-9466 | 1 | Plug |
| 170 | 98-9451 | 1 | Gasket |

| | | | |
|---|---|---|---|
| | | | |

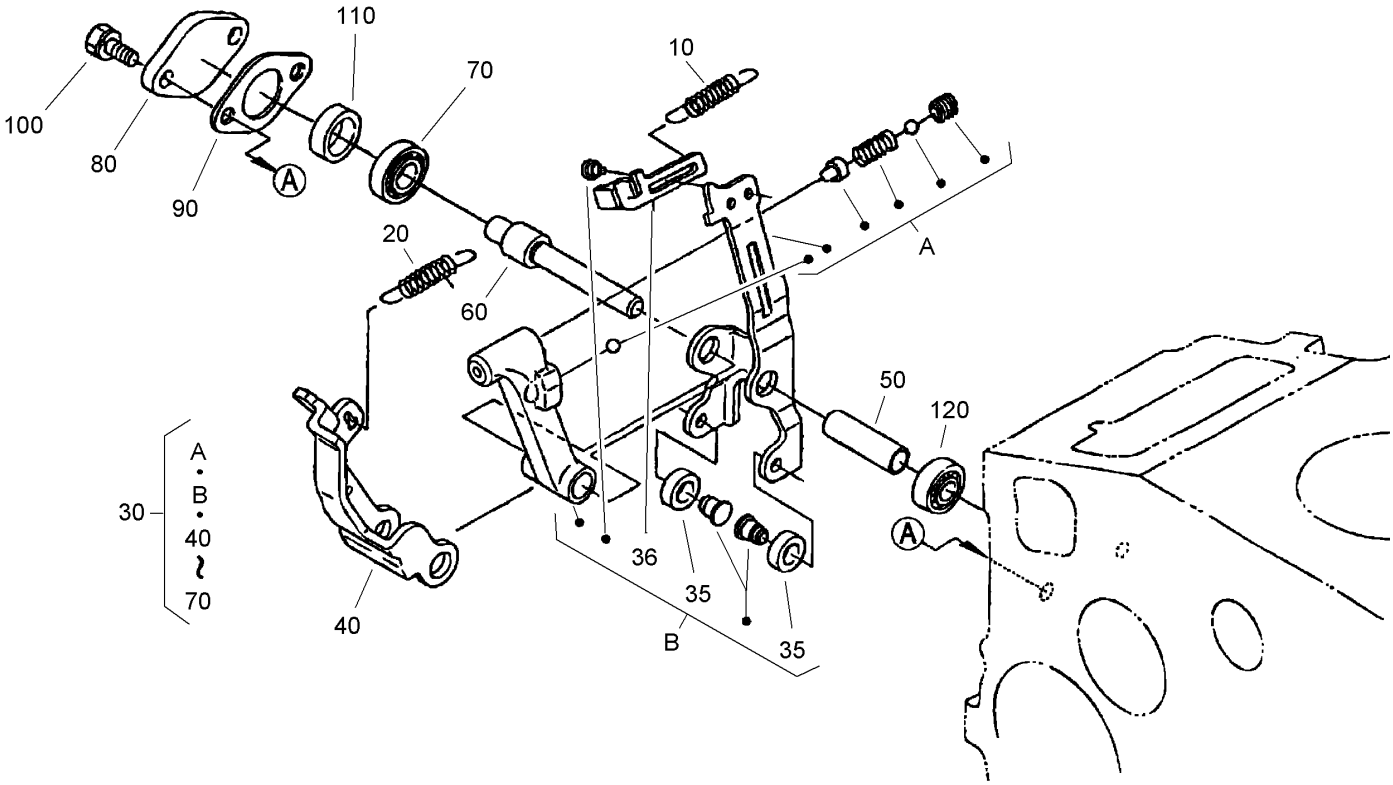


# Governor Assembly

| Ref | Part No. | Qty. | Description |
|---|---|---|---|
| 10 | 105-3786 | 1 | Spring-Start |
| 20 | 98-9681 | 1 | Spring-Governor |
| 30 | 107-9082 | 1 | Fork Lever ASM |
| 35 | 98-9692 | 2 | Roller |
| 36 | 107-9083 | 1 | Lever-Thrust |
| 40 | 107-9084 | 1 | Lever-Fork |
| 50 | 107-9085 | 1 | Shaft-Lever, Fork |
| 60 | 107-9086 | 1 | Shaft-Lever, Fork |
| 70 | 98-9570 | 1 | Bearing-Miniaturize |
| 80 | 98-9569 | 1 | Cover-Shaft, Fork Lever |
| 90 | 98-9682 | 1 | Gasket |
| 100 | 98-9351 | 2 | Bolt |
| 110 | 98-9567 | 1 | Collar |
| 120 | 98-9571 | 1 | Bearing-Miniaturize |

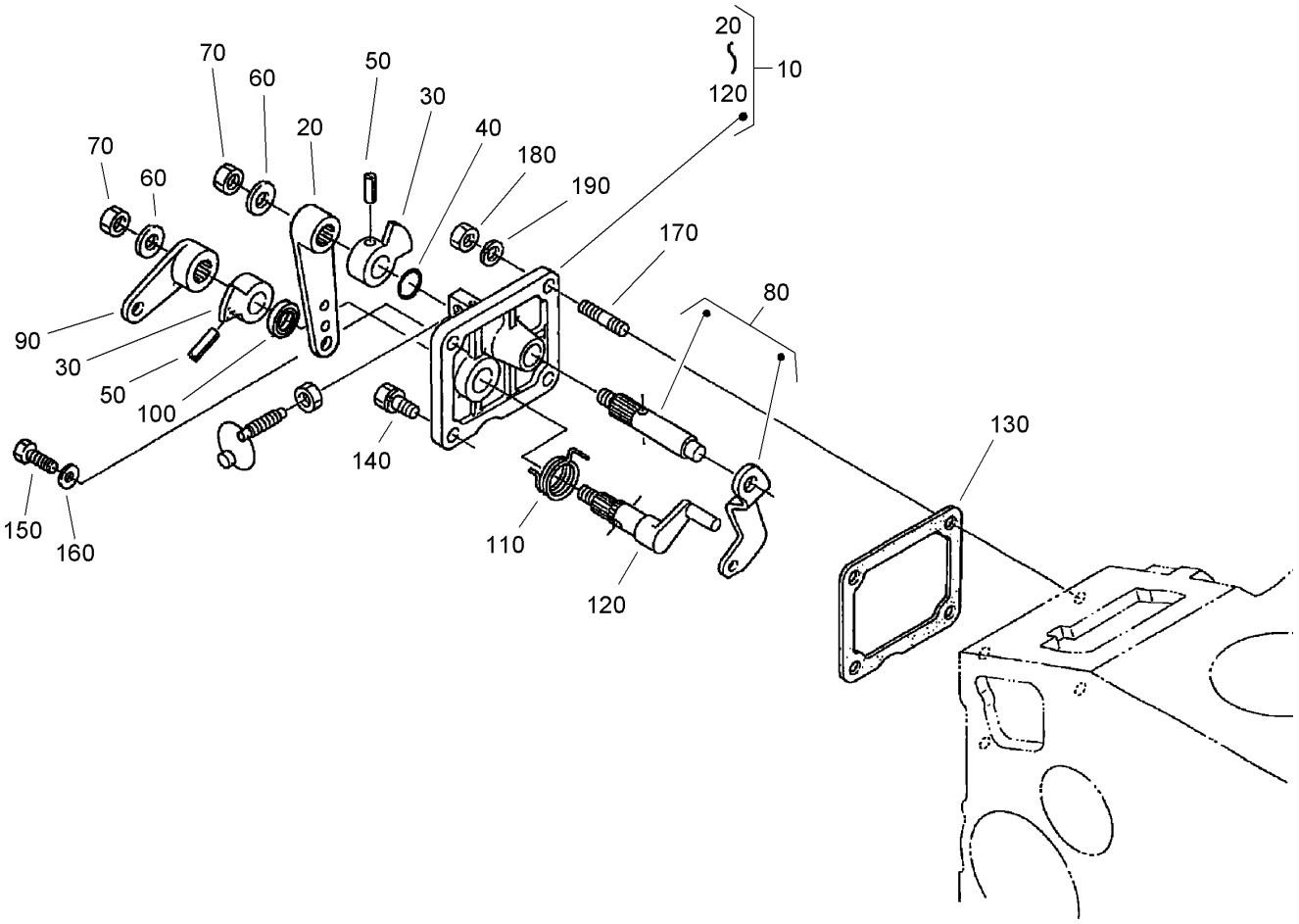


# Speed Control Plate Assembly

| Ref | Part No. | Qty. | Description |
|---|---|---|---|
| 10 | 105-3735 | 1 | Control Plate ASM |
| 20 | 98-9662 | 1 | Lever-Control, Speed |
| 30 | 98-9572 | 2 | Lever-Control, Speed |
| 40 | 105-3788 | 1 | O-Ring |
| 50 | 98-7602 | 2 | Pin-Spring |
| 60 | 98-9594 | 2 | Washer-Plain |
| 70 | 98-9589 | 2 | Nut |
| 80 | 98-9658 | 1 | Governor Lever ASM |
| 90 | 98-9663 | 1 | Lever-Stop, Engine |
| 100 | 98-7601 | 1 | Seal-Oil |
| 110 | 98-9472 | 1 | Spring-Return |
| 120 | 98-9664 | 1 | Shaft-Lever, Stop |
| 130 | 98-9637 | 1 | Gasket |
| 140 | 98-7692 | 1 | Bolt |
| 150 | 99-8348 | 1 | Bolt |
| 160 | 98-7654 | 2 | Gasket |
| 170 | 105-3710 | 2 | Stud |
| 180 | 98-7572 | 2 | Nut |
| 190 | 98-7699 | 2 | Washer-Spring |

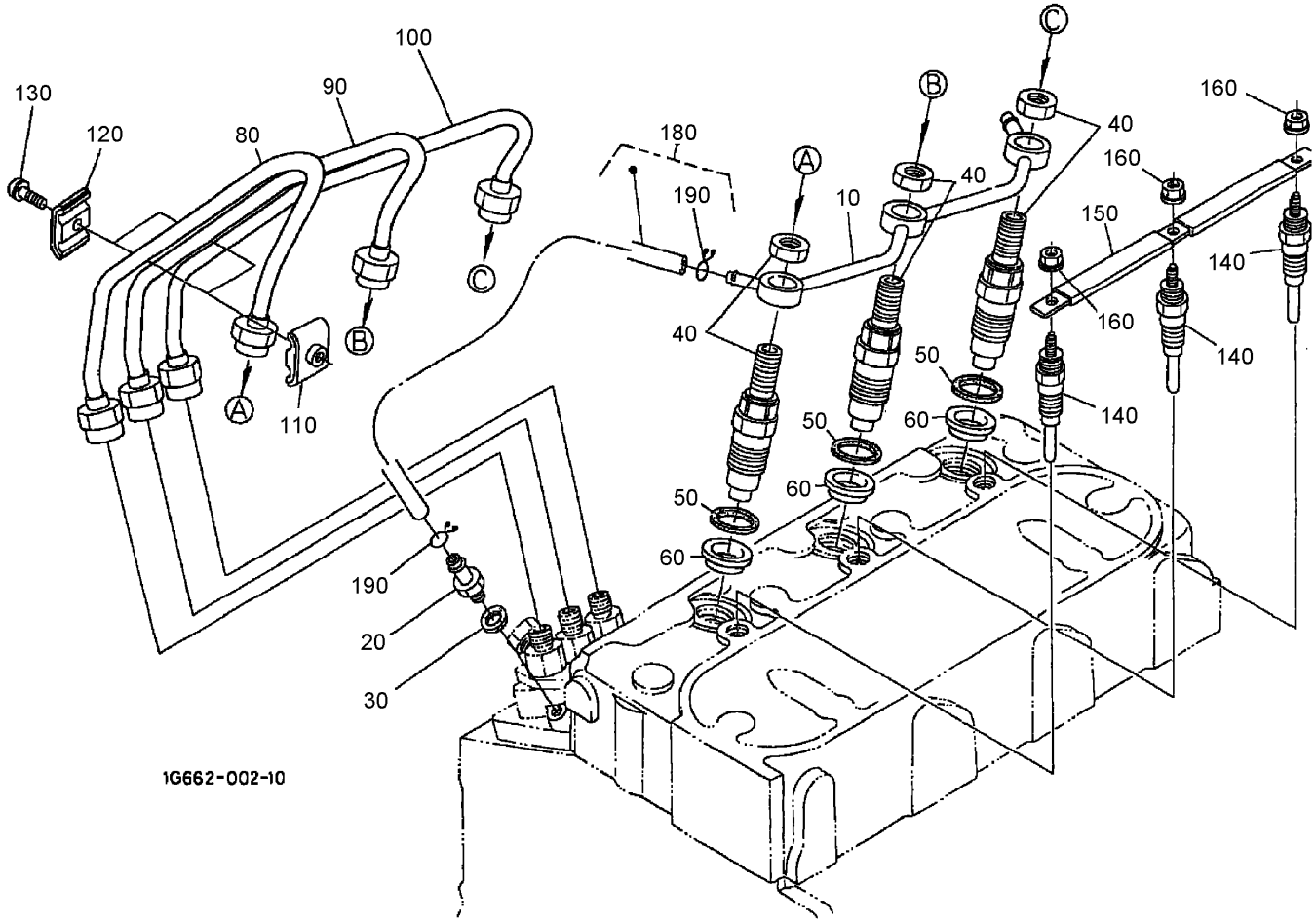


# Nozzle Holder and Glow Plug Assembly

| Ref | Part No. | Qty. | Description |
|---|---|---|---|
| 10 | 98-9620 | 1 | Over Flow Pipe ASM |
| 20 | 98-9431 | 1 | Screw-Bleeder |
| 30 | 98-7654 | 1 | Gasket |
| 40 | 108-2866 | 3 | Nozzle Holder Kit |
| 50 | 98-7676 | 3 | Gasket |
| 60 | 98-7677 | 3 | Seal |
| 80 | 98-9653 | 1 | Pipe-Injection |
| 90 | 98-9654 | 1 | Pipe-Injection |
| 100 | 98-9655 | 1 | Pipe-Injection |
| 110 | 98-7682 | 2 | Clamp-Pipe |
| 120 | 98-7683 | 2 | Clamp-Pipe |
| 130 | 98-7684 | 2 | Screw (W/Washer) |
| 140 | 98-9695 | 3 | Plug-Glow |
| 150 | 98-9631 | 3 | Cord-Plug, Glow |
| 160 | 99-8377 | 3 | Nut-Flange |
| 180 | 98-9420 | 1 | Over Flow Pipe ASM |
| 190 | 98-7671 | 2 | Clip-Pipe |

| | | | |
|---|---|---|---|
| | | | |

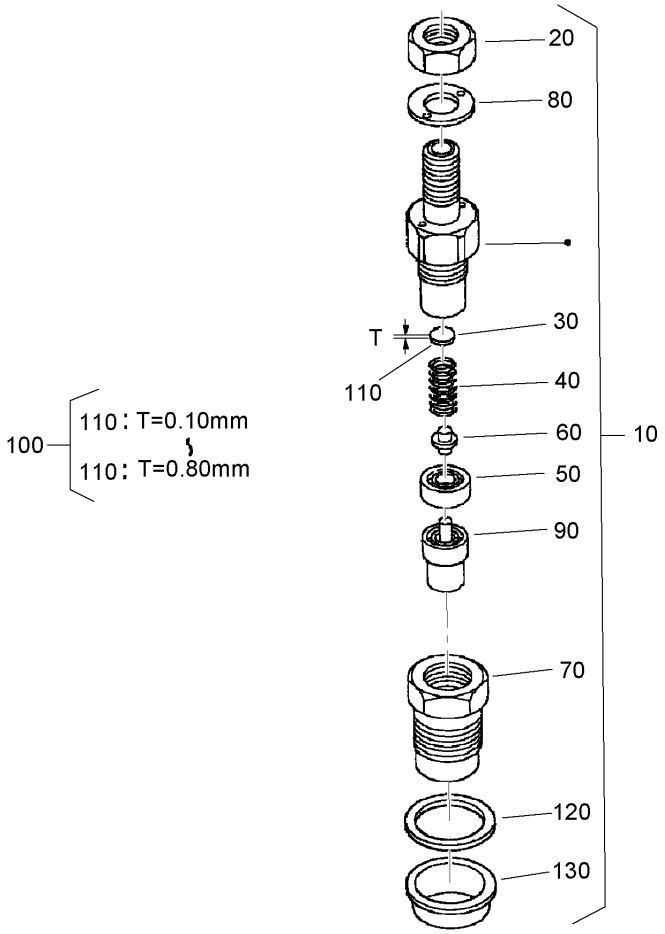


# Nozzle Holder Assembly

| Ref | Part No. | Qty. | Description |
|---|---|---|---|
| 10 | 108-2866 | 3 | Nozzle Holder Kit |
| 20 | 99-8301 | 3 | Nut |
| 30 | 99-8302 | 3 | Washer-Adjusting |
| 40 | 99-8303 | 3 | Spring-Nozzle |
| 50 | 99-8304 | 3 | Spacer-Distance |
| 60 | 99-8305 | 3 | Rod-Push |
| 70 | 99-8306 | 3 | Nut-Nozzle |
| 80 | 99-8307 | 3 | Washer-Plain |
| 90 | 107-7826 | 3 | Piece-Nozzle |
| 100 | 99-8309 | 3 | Adjusting Washer ASM |
| 110 | 99-8310 | 3 | Washer-Adjust (0.10Mm) |
| 110 | 99-8311 | 3 | Washer-Adjust (0.20Mm) |
| 110 | 99-8312 | 3 | Washer-Adjust (0.30Mm) |
| 110 | 99-8313 | 3 | Washer-Adjust (0.40Mm) |
| 110 | 99-8314 | 3 | Washer-Adjust (0.50Mm) |
| 110 | 99-8315 | 3 | Washer-Adjust (0.52Mm) |
| 110 | 99-8316 | 3 | Washer-Adjust (0.54Mm) |
| 110 | 99-8317 | 3 | Washer-Adjust (0.56Mm) |
| 110 | 99-8318 | 3 | Washer-Adjust (0.58Mm) |
| 110 | 99-8319 | 3 | Washer-Adjust (0.80Mm) |
| 120 | 98-7676 | 3 | Gasket |
| 130 | 98-7677 | 3 | Seal |

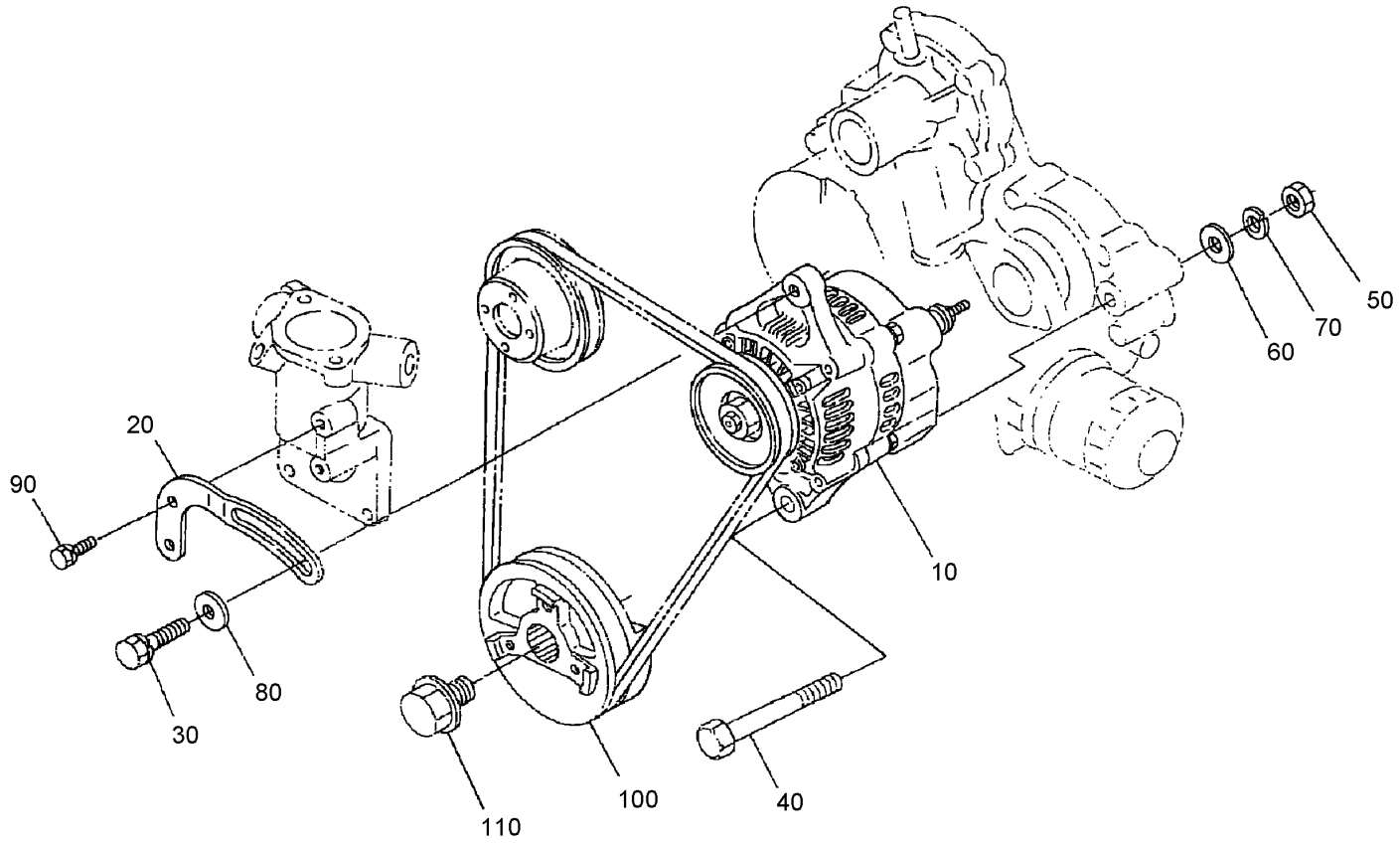


# Alternator and Pulley Assembly

| Ref | Part No. | Qty. | Description |
|---|---|---|---|
| 10 | 98-9474 | 1 | Alternator ASM |
| 20 | 98-9573 | 1 | Stay-Dynamo |
| 30 | 108-7088 | 1 | Bolt |
| 40 | 98-9360 | 1 | Bolt |
| 50 | 98-7737 | 1 | Nut |
| 60 | 3256-24 | 1 | Washer-Flat |
| 70 | 98-7738 | 1 | Washer-Spring |
| 80 | 100-9233 | 1 | Washer-Plain |
| 90 | 98-7692 | 1 | Bolt |
| 100 | 98-9473 | 1 | Pulley-Drive, Fan |
| 110 | 98-9585 | 1 | Bolt |

| | | | |
|---|---|---|---|
| | | | |

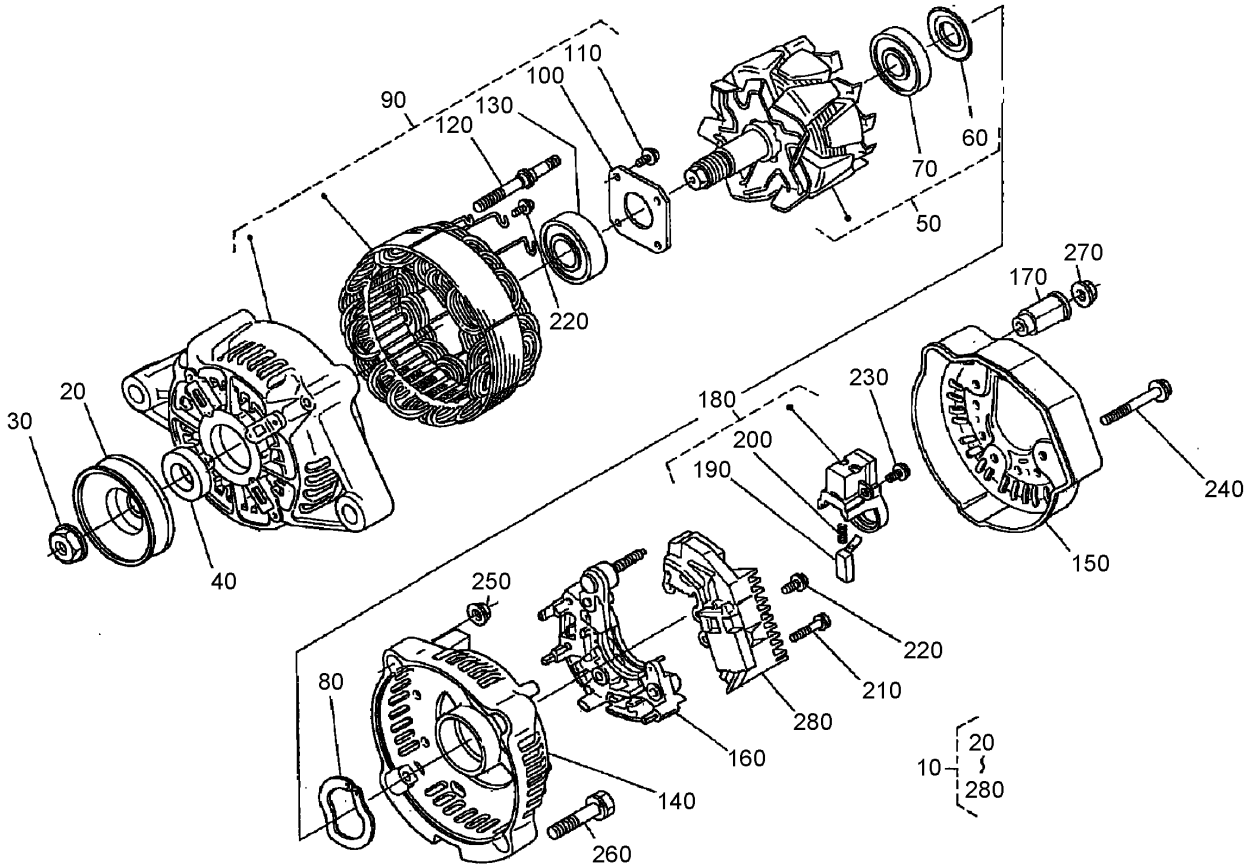


# Alternator (Component Part) Assembly

| Ref | Part No. | Qty. | Description |
|---|---|---|---|
| 10 | 98-9474 | 1 | Alternator ASM |
| 20 | 98-9453 | 1 | Pulley-Dynamo |
| 30 | 98-7708 | 1 | Nut |
| 40 | 98-7709 | 1 | Collar |
| 50 | 107-0136 | 1 | Rotor |
| 60 | 98-7711 | 1 | Cover-Bearing |
| 70 | 107-0138 | 1 | Bearing-Ball |
| 80 | 98-7713 | 1 | Washer-Thrust |
| 90 | 107-0139 | 1 | Drive End Frame ASM |
| 100 | 98-7715 | 1 | Plate-Retainer |
| 110 | 98-7716 | 4 | Screw-Head, Round |
| 120 | 98-7717 | 2 | Bolt-Through |
| 130 | 107-0137 | 1 | Bearing-Ball |
| 140 | 107-9087 | 1 | Frame-End |
| 150 | 107-0140 | 1 | Cover-End |
| 160 | 98-9476 | 1 | Rectifier ASM |
| 170 | 98-7722 | 1 | Bushing-Insulation |
| 180 | 107-0141 | 1 | Holder-Brush |
| 190 | 98-7724 | 2 | Brush |
| 200 | 98-7725 | 2 | Spring-Brush |
| 210 | 98-7726 | 2 | Screw-Head, Round |
| 220 | 98-7727 | 6 | Screw-Head, Round |
| 230 | 98-7728 | 1 | Screw-Head, Round |
| 240 | 98-7729 | 3 | Bolt |

| Ref | Part No. | Qty. | Description |
|---|---|---|---|
| 250 | 98-7730 | 2 | Nut |
| 260 | 98-7731 | 2 | Bolt |
| 270 | 98-7732 | 1 | Nut |
| 280 | 107-9088 | 1 | Regulator ASM |

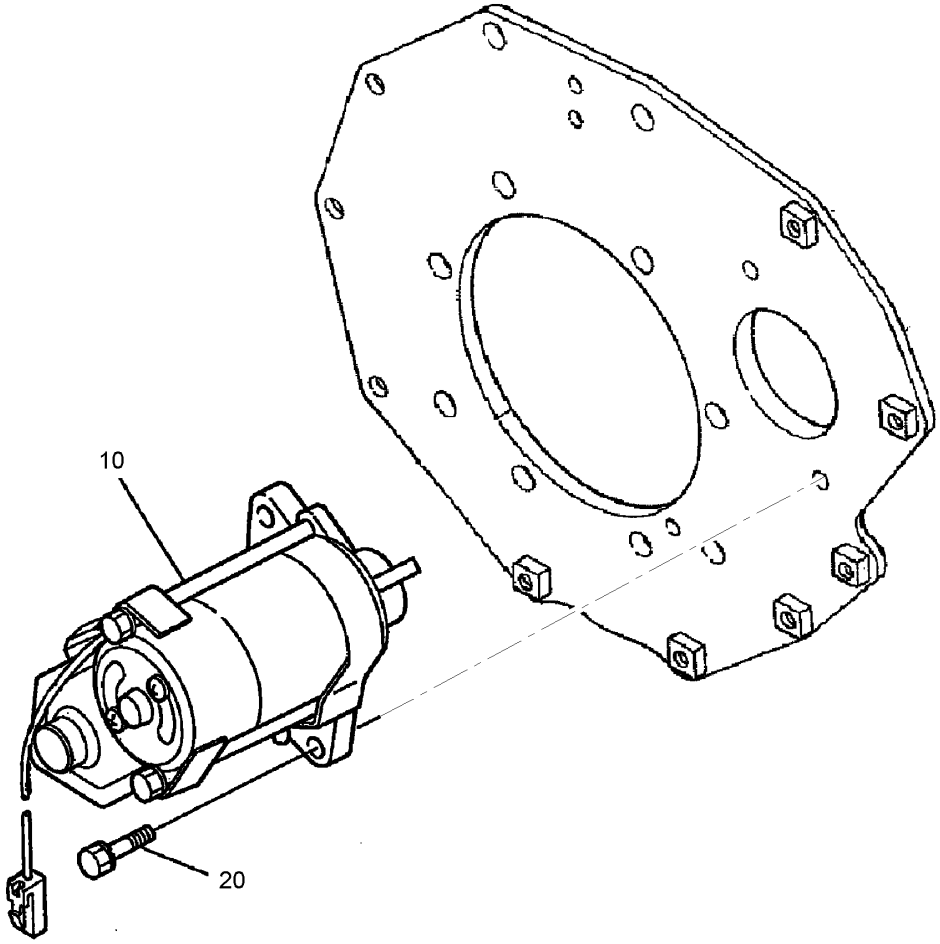


# Starter Assembly

| Ref | Part No. | Qty. | Description |
|---|---|---|---|
| 10 | 98-9705 | 1 | Starter ASM |
| 20 | 98-7697 | 2 | Bolt |

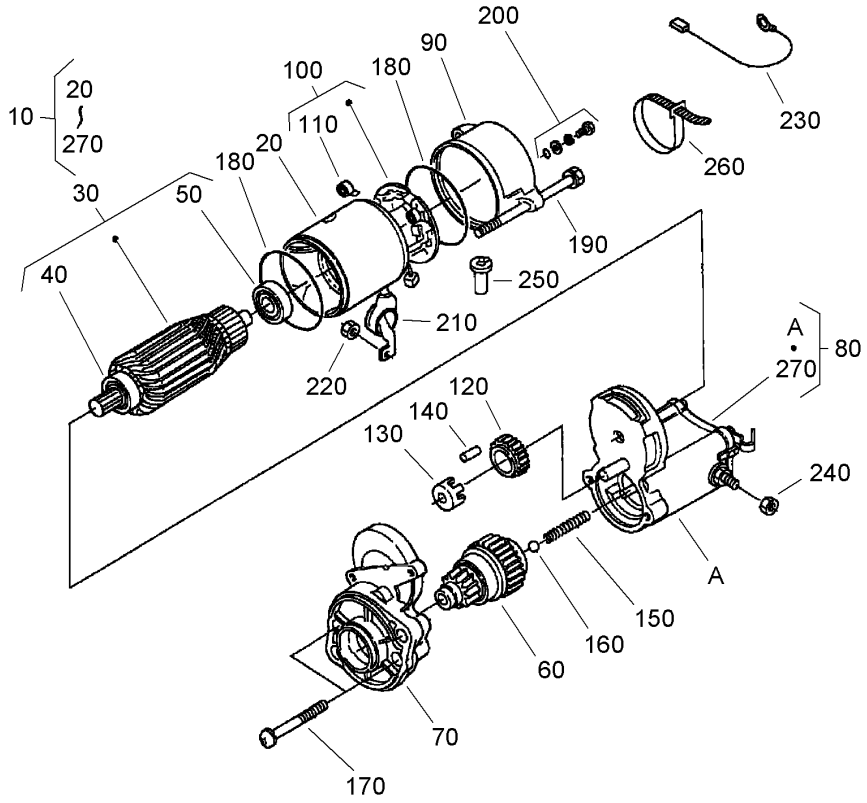


# Starter Assembly No. 98-9705

| Ref | Part No. | Qty. | Description |
|---|---|---|---|
| 10 | 98-9705 | 1 | Starter ASM |
| 20 | 104-8608 | 1 | Yoke ASM |
| 30 | 98-7742 | 1 | Armature ASM |
| 40 | 98-7744 | 1 | Bearing |
| 50 | 98-7743 | 1 | Bearing |
| 60 | 99-8373 | 1 | Clutch-Running, Over |
| 70 | 99-8374 | 1 | Frame-End, Drive |
| 80 | 105-3746 | 1 | Magnetic Switch ASM |
| 90 | 98-7748 | 1 | Frame-End |
| 100 | 98-7749 | 1 | Brush Holder ASM |
| 110 | 98-7750 | 4 | Spring-Brush |
| 120 | 98-7751 | 1 | Gear |
| 130 | 98-7752 | 1 | Retainer |
| 140 | 98-7753 | 5 | Roller |
| 150 | 98-7754 | 1 | Spring |
| 160 | 98-7755 | 1 | Ball |
| 170 | 98-7756 | 2 | Bolt |
| 180 | 98-7757 | 2 | O-Ring |
| 190 | 100-9240 | 2 | Bolt |
| 200 | 98-7758 | 2 | Bolt ASM |
| 210 | 99-8375 | 1 | Cover |
| 220 | 99-8371 | 1 | Nut-Hex |
| 230 | 98-9711 | 1 | Cord-Solenoid, Stop |
| 240 | 99-8376 | 1 | Nut-Hex |

| Ref | Part No. | Qty. | Description |
|---|---|---|---|
| 250 | 98-7759 | 1 | Pipe-Drain |
| 260 | 98-9712 | 1 | Band-Cover |
| 270 | 105-2886 | 1 | Cover ASM |

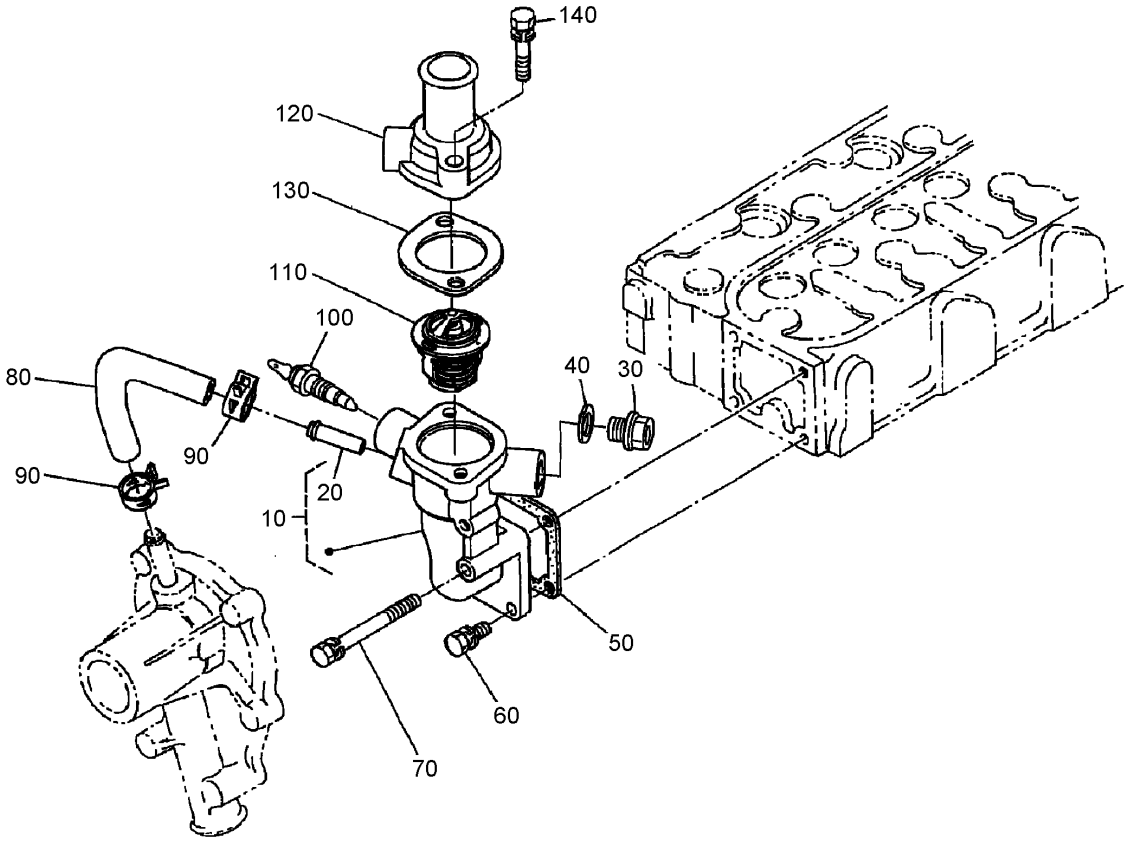


# Water Flange and Thermostat Assembly

| Ref | Part No. | Qty. | Description |
|---|---|---|---|
| 10 | 98-9713 | 1 | Water Flange ASM |
| 20 | 98-9580 | 1 | Pipe-Return, Water |
| 30 | 105-3747 | 1 | Plug |
| 40 | 99-3583 | 1 | Packing |
| 50 | 98-9638 | 1 | Gasket-Flange, Water |
| 60 | 98-7692 | 3 | Bolt |
| 70 | 98-9356 | 1 | Bolt |
| 80 | 98-9578 | 1 | Pipe-Return, Water |
| 90 | 98-9579 | 2 | Band-Pipe |
| 100 | 98-9719 | 1 | Thermoswitch |
| 110 | 98-7778 | 1 | Thermostat ASM |
| 120 | 98-9471 | 1 | Cover-Thermostat |
| 130 | 105-3748 | 1 | Gasket-Thermostat |
| 140 | 98-7777 | 2 | Bolt |

| | | | |
|---|---|---|---|
| | | | |

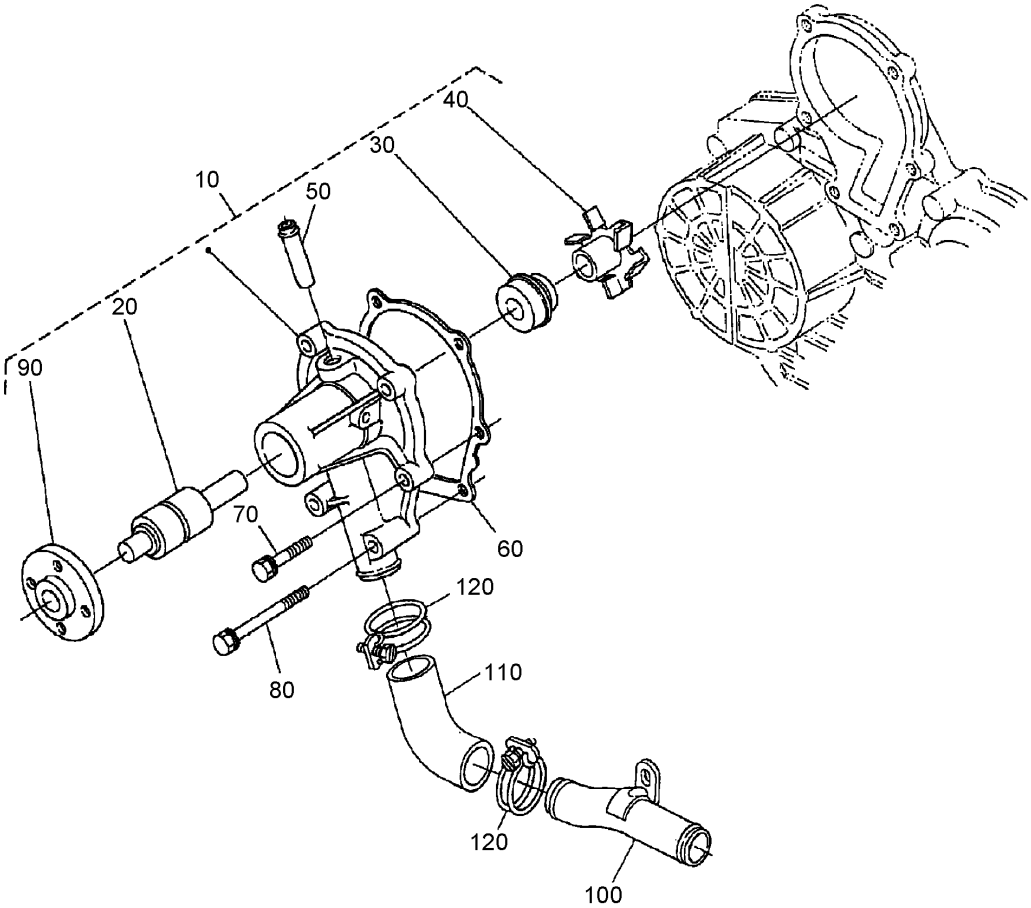


# Water Pump and Pipe Assembly

| Ref | Part No. | Qty. | Description |
|---|---|---|---|
| 10 | 107-9089 | 1 | Water Pump ASM |
| 20 | 99-3517 | 1 | Bearing-Pump, Water |
| 30 | 105-3750 | 1 | Mechanical Seal ASM |
| 40 | 99-3519 | 1 | Impeller-Pump, Water |
| 50 | 98-9577 | 1 | Pipe-Return, Water |
| 60 | 99-3454 | 1 | Gasket-Pump, Water |
| 70 | 98-9353 | 4 | Bolt |
| 80 | 107-9090 | 2 | Bolt |
| 90 | 99-3516 | 4 | Flange-Pump, Water |
| 100 | 98-9716 | 1 | Pipe-Water |
| 110 | 107-9091 | 1 | Pipe-Water |
| 120 | 98-9717 | 2 | Clamp |

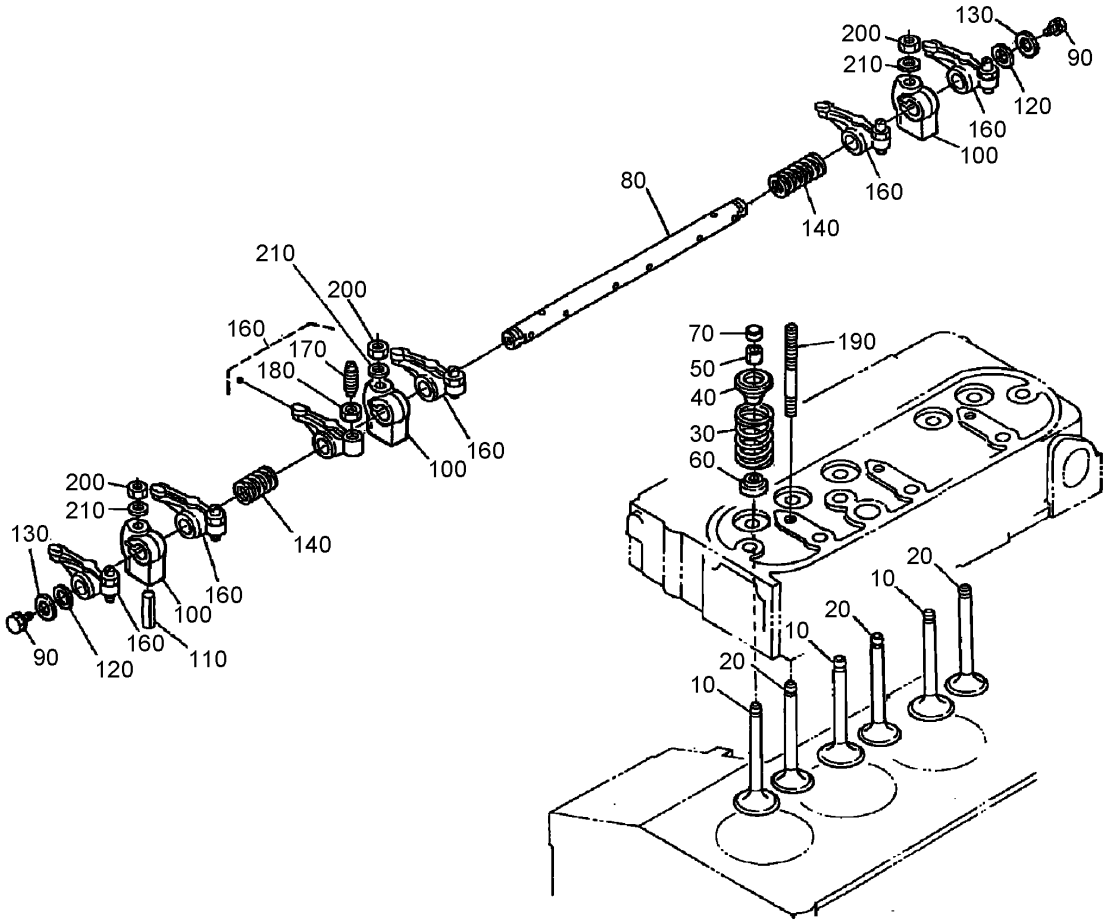


# Valve and Rocker Arm Assembly

| Ref | Part No. | Qty. | Description |
|---|---|---|---|
| 10 | 98-9494 | 3 | Valve-Inlet |
| 20 | 98-9495 | 3 | Valve-Exhaust |
| 30 | 98-9648 | 6 | Spring-Valve |
| 40 | 107-9092 | 6 | Retainer-Spring |
| 50 | 98-9390 | 6 | Collet-Set, Valve Spring |
| 60 | 99-8385 | 6 | Seat-Stem, Valve |
| 70 | 98-9497 | 6 | Cap-Valve |
| 80 | 105-3790 | 1 | R-Arm Shaft ASM |
| 90 | 100-9265 | 2 | Bolt |
| 100 | 98-9505 | 3 | Bracket-Arm, Rocker |
| 110 | 105-3758 | 1 | Pin-Spring |
| 120 | 98-9507 | 2 | Washer-Shaft, R-Arm |
| 130 | 3256-1 | 2 | Washer-Flat |
| 140 | 98-9504 | 2 | Spring-Arm, Rocker |
| 160 | 98-9501 | 6 | Rocker Arm ASM |
| 170 | 98-9502 | 6 | Screw-Adjusting |
| 180 | 98-9503 | 6 | Nut |
| 190 | 98-9506 | 3 | Stud |
| 200 | 98-9393 | 3 | Nut |
| 210 | 98-9385 | 3 | Washer-Flat |

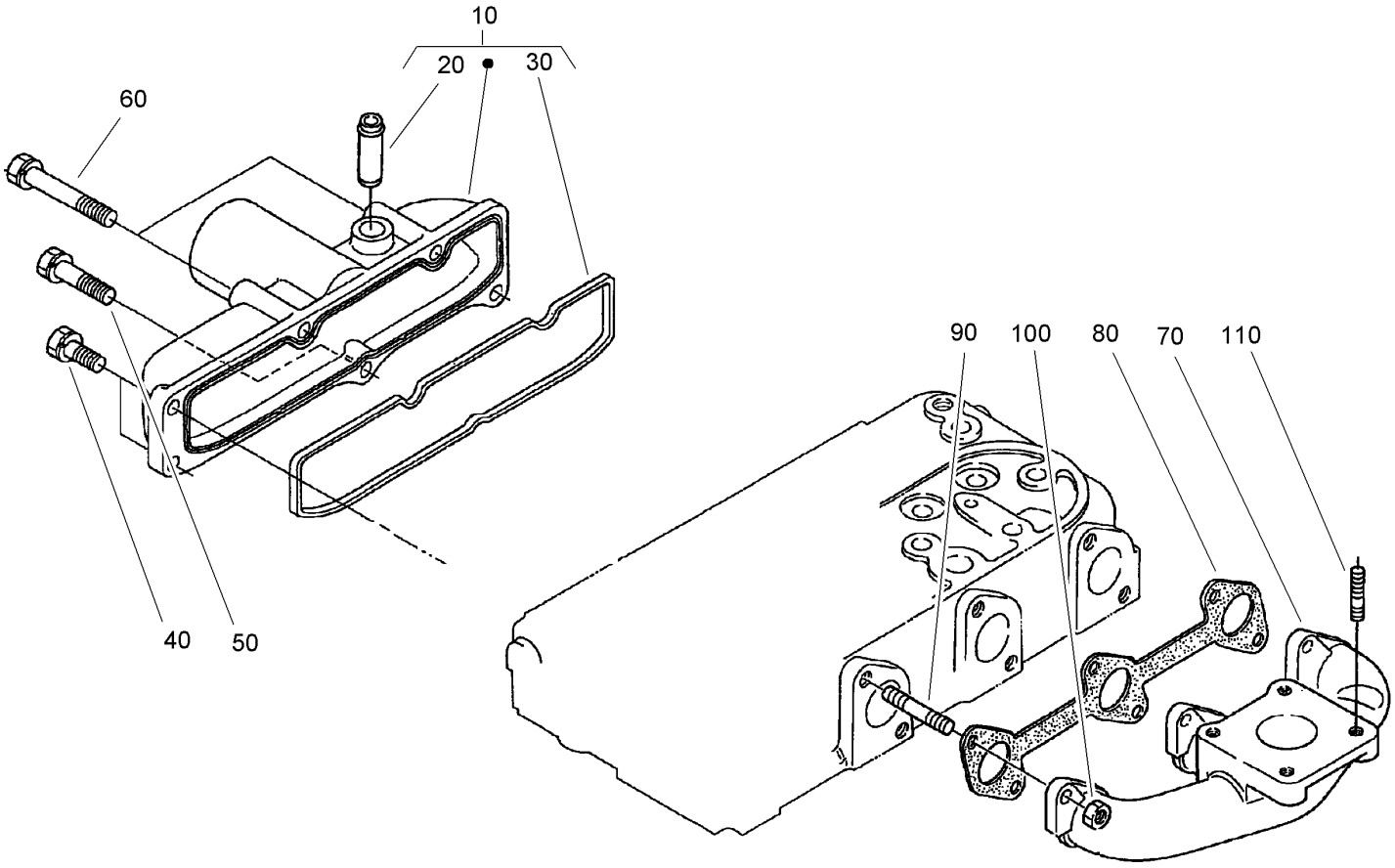


# Inlet Manifold Assembly

| Ref | Part No. | Qty. | Description |
|---|---|---|---|
| 10 | 108-6577 | 1 | Inlet Manifold ASM |
| 20 | 98-9492 | 1 | Joint-Pipe, Breather |
| 30 | 98-9609 | 1 | Gasket |
| 40 | 98-7605 | 3 | Bolt |
| 50 | 98-9353 | 1 | Bolt |
| 60 | 105-3797 | 2 | Bolt |
| 70 | 107-9093 | 1 | Manifold-Exhaust |
| 80 | 98-9610 | 1 | Gasket |
| 90 | 98-9588 | 6 | Stud |
| 100 | 98-9665 | 6 | Nut |
| 110 | 98-7769 | 4 | Stud |

| | | | |
|---|---|---|---|
| | | | |

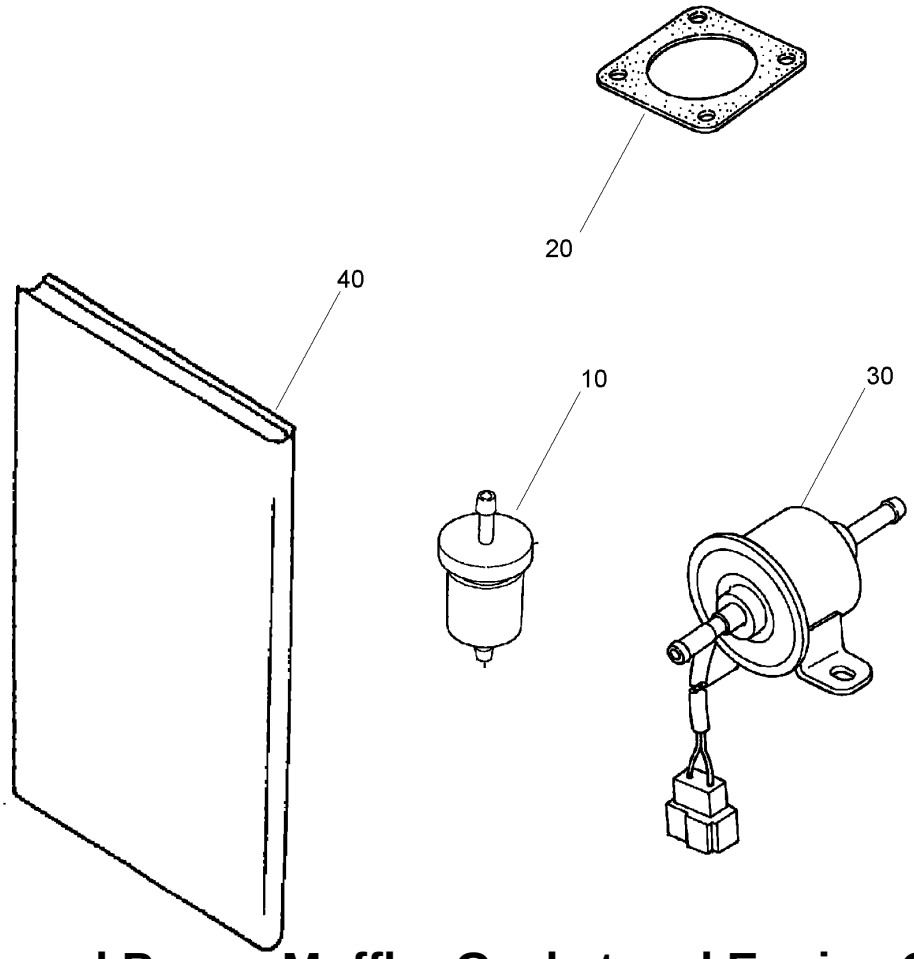


# Fuel Filter and Pump, Muffler Gasket and Engine Operator Manual

| Ref | Part No. | Qty. | Description |
|---|---|---|---|
| 10 | 98-7612 | 1 | Filter-Fuel |
| 20 | 99-8343 | 1 | Gasket-Muffler |
| 30 | 107-0122 | 1 | Pump-Fuel, Electric |
| 40 | 99-8954 | 1 | Manual-Kubota |

| | | | |
|---|---|---|---|
| | | | |

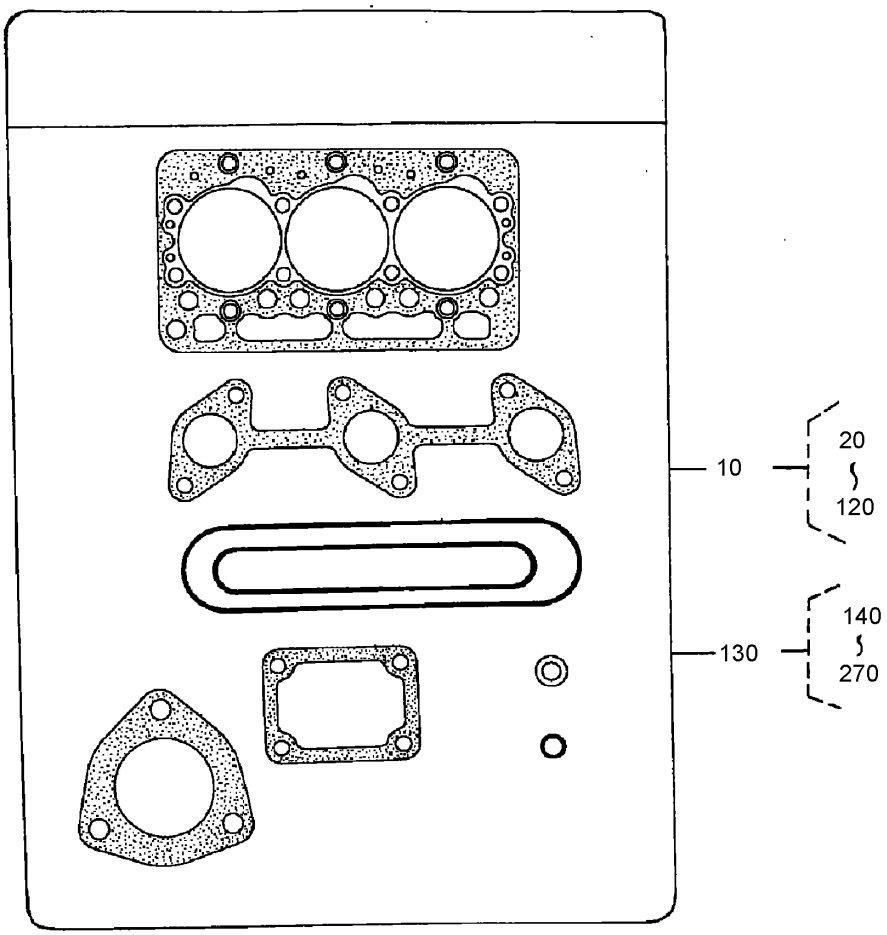


# Gasket Assembly

| Ref | Part No. | Qty. | Description |
|---|---|---|---|
| 10 | 107-7848 | 1 | Upper Gasket Kit |
| 130 | 107-9095 | 1 | Lower Gasket Kit |

# Attachments and Accessories

## For 30345 - Groundsmaster 3280-D 4-Wheel Drive

| Product Name | Model/Part |
|---|---|
| Premium Engine Oil, 10w30 (Drum) | 108-1179 |
| Premium Engine Oil, 10w30 (Pail) | 108-1180 |
| Premium Engine Oil, 15w40 (Drum) | 108-1181 |
| Premium Engine Oil, 15w40 (Pail) | 108-1182 |
| Premium Transmission/Hydraulic Tractor Fluid (Drum) | 108-1183 |
| Premium Transmission/Hydraulic Tractor Fluid (Pail) | 108-1184 |
| Premium All Season Gear Lube (Pail) | 108-1187 |
| Premium All Purpose Grease | 108-1190 |
| Premium All Season Gear Lube (Quart) | 108-1590 |
| Wheel | 108-6563 |
| Wheel And Tire ASM (Wide Tire Option) | 108-6598 |
| 65 lb. Weight Kit | 108-9682 |
| Armrest Adapter Kit | 108-9687 |
| Wheel Weight Kit | 11-0440 |
| Auxiliary Valve Kit | 110-5670 |
| Implement Flow Control Kit | 110-5699 |
| Rear Axle Skid Plate Kit | 110-9694 |
| Tire | 231-95 |
| Rear Weight Kit | 24-5780 |
| V-Plow Mounting Kit | 30311 |
| Mechanical Seat Suspension Kit | 30312 |
| Pneumatic Seat Suspension Kit | 30313 |
| 15 Cubic Foot Bagger Kit | 30356 |
| 60 Inch Blower Kit | 30357 |
| Hardtop Sunshade | 30359 |
| 60 Inch Side Discharge Mower | 30366 |
| 62 Inch Rear Discharge Mower | 30367 |
| 72 Inch Side Discharge Mower | 30368 |
| 72 Inch Rear Discharge Mower | 30369 |
| 62 Inch Guardian Recycler Mower | 30376 |
| 72 Inch Guardian Recycler Mower | 30379 |
| Auxiliary Power Unit | 30382 |
| Cab ASM | 30391 |
| Standard Seat Kit | 30398 |
| 52 Inch Blower Kit | 30502 |
| 52 Inch Side Discharge Mower | 30555 |
| Arm Rest Kit | 30707 |
| 48 Inch V-Plow | 30750 |
| Debris Blower | 30823 |
| Tire | 69-9880 |
| Spark Arrestor Screen | 75-6880 |
| Tire Chains (23 x 9.50-12) | 82531 |
| Drive Shaft Kit | 92-9075 |

# NOTES

# NOTES

TORO®