Form No. 3357–349 Rev. A

TORO®

Greensmaster® 1000 and 1600

Greensmaster Mower

Model No. 04052—Serial No. 260003001 and Up

Model No. 04060—Serial No. 260003001 and Up

Operator's Manual

CE

English (EN, GB)

Contents

	Page
Introduction	2
Safety	3
Safe Operating Practices	3
Toro Mower Safety	4
Sound Pressure Level	5
Sound Power Level	5
Vibration Level Model 04052	5
Vibration Level Model 04060	5
Safety and Instruction Decals	6
Specifications	8
General Specifications	8
Setup	9
Loose Parts	9
Installing and Adjusting the Handle	10
Installing the Kick Stand Model 04060 only	10
Installing the Transport Wheels	11
Before Operating	11
Adding Engine Oil	11
Filling the Fuel Tank	12
Leveling the Rear Drum to the Reel	13
Adjusting the Bedknife to the Reel	14
Adjusting the Height-of-Cut	15
Adjusting the Grass Shield Height	16
Adjusting the Cut-off Bar	16
Installing the Grass Basket	16
Checking the Operation of the Interlock Switch	16
Operation	17
Controls	17
Starting the Engine	18
Stopping the Engine	18
Driving the Machine in Transport	18
Preparing to Mow	19
Mowing Tips	19
Mowing	19
Maintenance	20
Recommended Maintenance Schedule	20
Daily Maintenance Checklist	21
Greasing the Machine	22
Checking and Changing Engine Oil	23
Servicing the Air Cleaner	23
Replacing the Spark Plug	24
Cleaning the Fuel Filter	24
Adjusting Belts	25
Replacing the Differential Belt	27
Adjusting the Traction Control	28
Adjusting the Service/Park Brake	28
Adjusting the Interlock Switch	29
Servicing the Bedbar Greensmaster 1600 only	29
Servicing the Bedbar Greensmaster 1000 only	29
Backlapping the Reel	30
Evaporative Emission Control Warranty Statement	31
The Toro General Commercial Products Warranty	32

Introduction

Read this manual carefully to learn how to operate and maintain your product properly. The information in this manual can help you and others avoid injury and product damage. Although Toro designs and produces safe products, you are responsible for operating the product properly and safely.

Whenever you need service, genuine Toro parts, or additional information, contact an Authorized Service Dealer or Toro Customer Service and have the model and serial numbers of your product ready. The model and serial numbers are located on a plate on the rear frame.

Write the product model and serial numbers in the space below:

Model No. _____

Serial No. _____

This manual identifies potential hazards and has special safety messages that help you and others avoid personal injury and even death. ***Danger***, ***Warning***, and ***Caution*** are signal words used to identify the level of hazard. However, regardless of the hazard, be extremely careful.

Danger signals an extreme hazard that *will* cause serious injury or death if you do not follow the recommended precautions.

Warning signals a hazard that *may* cause serious injury or death if you do not follow the recommended precautions.

Caution signals a hazard that may cause minor or moderate injury if you do not follow the recommended precautions.

This manual uses two other words to highlight information. **Important** calls attention to special mechanical information and **Note:** emphasizes general information worthy of special attention.

© 2006 by The Toro Company

8111 Lyndale Avenue South
Bloomington, MN 55420-1196

All Rights Reserved

Printed in the USA

Safety

This machine meets or exceeds CEN standard EN 836:1997, ISO standard 5395:1990, and ANSI B71.4-2004 specifications in effect at the time of production when the Operator Presence Kit, Part No. 105–5363 is installed.

Improper use or maintenance by the operator or owner can result in injury. To reduce the potential for injury, comply with these safety instructions and always pay attention to the safety alert ⚠ symbol, which means CAUTION, WARNING, or DANGER—"personal safety instruction." Failure to comply with the instruction may result in personal injury or death.

Safe Operating Practices

The following instructions are from the CEN standard EN 836:1997, ISO standard 5395:1990, and ANSI B71.4-2004.

Training

- Read the Operator's Manual and other training material carefully. Be familiar with the controls, safety signs, and the proper use of the equipment.
- If the operator or mechanic can not read the language of is the owner's responsibility to explain this material to them.
- Never allow children, untrained people or people unfamiliar with these instructions to use or service the mower. Local regulations may restrict the age of the operator.
- Never mow while people, especially children, or pets are nearby.
- Keep in mind that the operator or user is responsible for accidents or hazards occurring to other people or their property.
- The owner/user can prevent and is responsible for accidents or injuries occurring to himself or herself, other people, or property.
- All operators or mechanics musted be trained. It is the owner's responsibility for training users.
- o explain this material to them.

Preparation

- While mowing, always wear substantial footwear, long trousers, hard hat, safety glasses, and hearing protection. Long hair, loose clothing, or jewelry may get tangled in moving parts. Do not operate the equipment when barefoot or wearing open sandals.
- Thoroughly inspect the area where the equipment is to be used and remove all objects which may be thrown by the machine.
- **Warning**—Fuel is highly flammable. Take the following precautions:
  - Store fuel in containers specifically designed for this purpose.
  - Refuel outdoors only and do not smoke while refuelling.
  - Add fuel before starting the engine. Never remove the cap of the fuel tank or add fuel while the engine is running or when the engine is hot.
  - If fuel is spilled, do not attempt to start the engine but move the machine away from the area of spillage and avoid creating any source of ignition until fuel vapors have dissipated.
  - Replace all fuel tanks and container caps securely.
- Replace faulty silencers.
- Evaluate the terrain to determine what accessories and attachments are needed to properly and safely perform the job. Only use accessories and attachments approved by the manufacturer.
- Check that operator's presence controls, safety switches and shields are attached and functioning properly. Do not operate unless they are functioning properly.

Operation

- Do not operate the engine in a confined space where dangerous carbon monoxide fumes can collect.
- Mow only in daylight or in good artificial light.
- Before attempting to start the engine, disengage all blade attachment clutches, shift into neutral, and engage the parking brake.
- Do not use on slopes of more than 15°.
- Remember there is no such thing as a safe slope. Travel on grass slopes requires particular care. To guard against overturning:
  - do not stop or start suddenly when going up or downhill;
  - engage clutch slowly, always keep machine in gear, especially when travelling downhill;
  - machine speeds should be kept low on slopes and during tight turns;
  - stay alert for humps and hollows and other hidden hazards;
  - never mow across the face of the slope, unless the mower is designed for this purpose.
- Stay alert for holes in the terrain and other hidden hazards.
- Watch out for traffic when crossing or near roadways.

- Stop the blades rotating before crossing surfaces other than grass.
- When using any attachments, never direct discharge of material toward bystanders nor allow anyone near the machine while in operation.
- Never operate the machine with damaged guards, shields, or without safety protective devices in place. Be sure all interlocks are attached, adjusted properly, and functioning properly.
- Do not change the engine governor settings or overspeed the engine. Operating the engine at excessive speed may increase the hazard of personal injury.
- Before leaving the operator's position:
  - stop on level ground;
  - disengage the cutting unit and traction drive;
  - set the parking brake;
  - stop the engine.
- Disengage drive to attachments when transporting or not in use.
- Stop the engine and disengage drive to attachment
  - before refuelling;
  - before removing the grass catcher;
  - before making height adjustment unless adjustment can be made from the operator's position.
  - before clearing blockages;
  - before checking, cleaning or working on the mower;
  - after striking a foreign object or if an abnormal vibration occurs. Inspect the mower for damage and make repairs before restarting and operating the equipment.
- Reduce the throttle setting during engine run-out and, if the engine is provided with a shut-off valve, turn the fuel off at the conclusion of mowing.
- Keep hands and feet away from the cutting unit.
- Slow down and use caution when making turns and crossing roads and sidewalks. Stop reel if not mowing.
- Do not operate the mower under the influence of alcohol or drugs
- Use care when loading or unloading the machine into a trailer or truck
- Use care when approaching blind corners, shrubs, trees, or other objects that may obscure vision.

Maintenance and Storage

- Keep all nuts, bolts and screws tight to be sure the equipment is in safe working condition.
- Never store the equipment with fuel in the tank inside a building where fumes may reach an open flame or spark.
- Allow the engine to cool before storing in any enclosure.
- To reduce the fire hazard, keep the engine, silencer, battery compartment and fuel storage area free of grass, leaves, or excessive grease.
- Check the grass catcher frequently for wear or deterioration.
- Keep all parts in good working condition and all hardware tightened. Replace all worn or damaged parts and decals.
- If the fuel tank has to be drained, do this outdoors.
- Be careful during adjustment of the machine to prevent entrapment of the fingers between moving blades and fixed parts of the machine.
- Disengage drives, disengage the cutting unit, set parking brake, stop engine and disconnect spark plug wire. Wait for all movement to stop before adjusting, cleaning or repairing.
- Clean grass and debris from cutting unit, drives, mufflers, and engine to help prevent fires. Clean up oil or fuel spillage.
- Carefully release pressure from components with stored energy.
- Remove spark plug wire before making any repairs. Disconnect the negative terminal first and the positive last. Reconnect positive first and negative last.
- Use care when checking the reel. Wear gloves and use caution when servicing them.
- Keep hands and feet away from moving parts. If possible, do not make adjustments with the engine running.

Toro Mower Safety

The following list contains safety information specific to Toro products or other safety information that you must know that is not included in the CEN, ISO, or ANSI standard.

This product is capable of amputating hands and feet and throwing objects. Always follow all safety instructions to avoid serious injury or death.

Use of this product for purposes other than its intended use could prove dangerous to user and bystanders.

- Know how to stop the engine quickly.
- Do not operate the machine while wearing tennis shoes or sneakers.
- Wearing safety shoes and long pants is advisable and required by some local ordinances and insurance regulations.
- Handle gasoline carefully. Wipe up any spills.
- Check the safety interlock switches daily for proper operation. If a switch should fail, replace the switch before operating the machine. After every two years, replace all four interlock switches in the safety system, **regardless** if they are working properly or not.
- Using the machine demands attention. To prevent loss of control:
  - Do not operate close to sand traps, ditches, creeks, or other hazards.
  - Reduce speed when making sharp turns. Avoid sudden stops and starts.
  - When near or crossing roads, always yield the right-of-way.
  - Apply the service brakes when going downhill to keep forward speed slow and to maintain control of the machine.
- The grass basket must be in place during operation of the reels for maximum safety. Shut the engine off before emptying the basket.
- Do not touch the engine, muffler, or exhaust pipe while the engine is running or soon after it has stopped because these areas could be hot enough to cause burns.
- Stay clear of the rotating screen at the side of the engine to prevent direct contact with your body or clothing.
- When a person or pet appears unexpectedly in or near the mowing area, **stop mowing.** Careless operation, combined with terrain angles, ricochets, or improperly positioned guards can lead to thrown object injuries. Do not resume mowing until the area is cleared.

Maintenance and Storage

- Check all fuel lines for tightness and wear on a regular basis. Tighten or repair them as needed.
- If the engine must be running to perform a maintenance adjustment, keep hands, feet, clothing, and any parts of the body away from the cutting unit, attachments, and any moving parts, especially the screen at the side of the engine. Keep everyone away.
- To ensure safety and accuracy, have an Authorized Toro Distributor check the maximum engine speed with a tachometer. Maximum governed engine speed should be 3600 RPM.
- If major repairs are ever needed or if assistance is desired, contact an Authorized Toro Distributor.
- Use only Toro-approved attachments and replacement parts. The warranty may be voided if used with unapproved attachments.

Sound Pressure Level

This unit has an equivalent continuous A-weighted sound pressure at the operator ear of: 84 dB(A), based on measurements of identical machines per procedures outlined in Directive 98/37/EC and amendments.

Sound Power Level

This unit has a guaranteed sound power level of: 95 dBA/1 pW, based on measurements of identical machines per Directive 2000/14/EC and amendments.

Vibration Level

Model 04052

This unit has a hand–arm vibration level of 7.00 $m/s^{2,}$ based on measurements of identical machines per ISO 5349 procedures.

Vibration Level

Model 04060

This unit has a hand–arm vibration level of 4.50 $m/s^{2,}$ based on measurements of identical machines per ISO 5349 procedures.

Safety and Instruction Decals

Safety decals and instructions are easily visible to the operator and are located near any area of potential danger. Replace any decal that is damaged or lost.



105-5360

1. Parking brake
2. Disengage
3. Engage
4. Clutch
5. Engage—forward
6. Disengage—neutral



93-7273

1. Thrown object hazard—Keep bystanders away
2. Cutting hazard, hand and foot—Stay away from moving parts

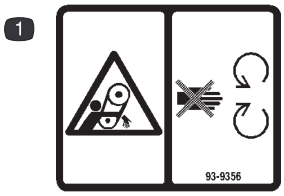

93-9356

1. Entanglement hazard—Stay away from moving parts.

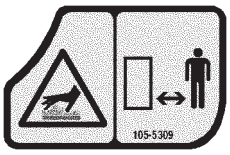

105-5309

1. Hot surface/burn hazard—stay a safe distance from the hot surface.

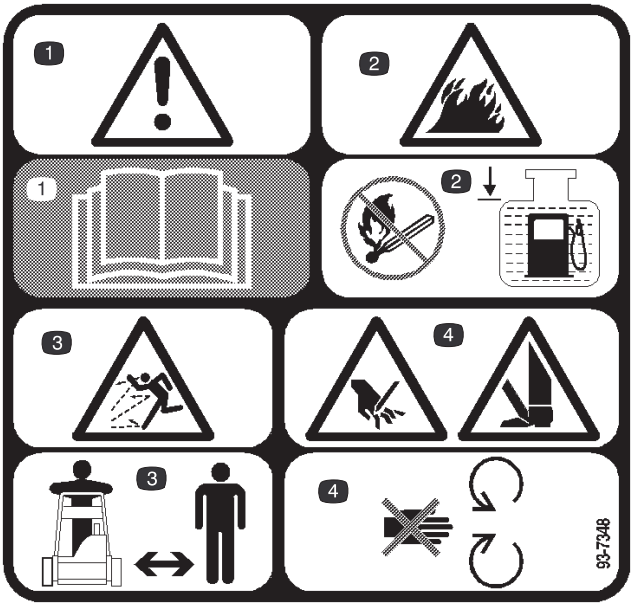

93-7348

1. Warning—Read the *Operator's Manual*
2. Fire hazard—No open flames or sparks and fill the tank only to the level shown
3. Thrown object hazard—Keep bystanders away
4. Cutting hazard, hand and foot—Stay away from moving parts

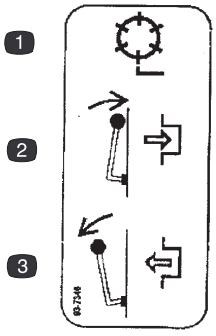

93-7346

1. Reel drive
2. Engage
3. Disengage

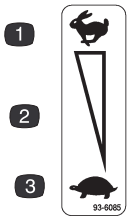

93-6085

1. Fast
2. Increasing/decreasing scale.
3. Slow

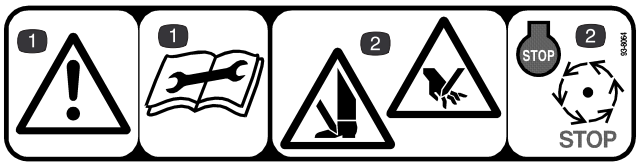

93-8064

1. Warning—Read the *Operator's Manual* before servicing
2. Cutting Hazard, hand and foot—Stop the engine and wait for moving parts to stop



93-9886

1. Use only unleaded gasoline

Specifications

General Specifications

Engine	Kawasaki, air cooled, overhead valve, 4 cycle, 3.7 horsepower, 2.36 x 1.73 bore and stroke, 7.57 cu. in. (124 cc) displacement, 8.4:1 compression ratio, 11 ft.-lb. (15 N·m) @ 1400 rpm. Electronic ignition, maximum noise suppression muffler. 2.64 quart (2.5 l) fuel tank capacity.
Traction Drive	Engine to countershaft drive: two “A” section V-belts. Countershaft to differential drive: 5 mm pitch timing belt. Differential to drum drive: 8 mm pitch timing belt.
Differential	Peerless Series 100
Transport Clutch	Belt idler
Brake	Band drum
Transport Tires	Quick detachable, 3.00/3.25 x 6, 32.5 tread width
Traction Drum	Dual cast aluminum, 7.5 in. (19 cm) dia.
Controls	Engine has recoil starter, On/Off switch and choke. Handle has throttle lever, traction engage lever and service/ park brake lever. Mower has reel drive engage lever. Safety devices: neutral interlock system.
Handle	Loop style, 1 in. (2.5 cm) dia.
Reel Construction	5 in. (12.7 cm) dia., 8 carbon steel blades welded to 6 stamped steel spiders
Bedknife and Bedbar	Single edged high carbon steel bedknife, hardened to Rc 48-54. Fastened to machined, cast iron bedbar. 1/8 in. (0.3 cm) bedknife, standard
Height-of-Cut Range	1/8 to 1-1/4 in. (0.3 to 3.2 cm)
Reel Clutch	Jaw type
Grass Basket	Molded polyethylene

	Model 04052	Model 04060
Clip	.16 in. (.4 cm)	.23 in. (58.4 cm)
Width of Cut	21 in. (53 cm)	26 in. (66 cm)
Total Width	36 in. (91 cm)	41 in. (104 cm)
Total Height	47 in. (119 cm)	41-1/2 in. (105.4 cm)
Total Length	59 in. (150 cm)	54-1/4 in. (137.8 cm)
Dry Weight	208 lb. (94 kg.) [1]	229 lb. (104 kg) [1]

[1]With basket and Wiehle roller, without wheels or grooming reel

Setup

Note: Determine the left and right sides of the machine from the normal operating position.

Loose Parts

Note: Use this chart as a checklist to ensure all parts necessary for assembly have been shipped. If any of these parts are missing, total set–up cannot be completed.

Description	Qty.	Use
Handle assembly	1	Install the handle on the machine
Cable tie	2	Secure the control cables to the handle
Wheel Shaft, right hand	1	Use when installing optional transport wheels
Wheel Shaft, left hand	1	
Spring	1	Mount kickstand, Model 04060 only
Grass basket	1	Install on the machine
Certificate of Compliance	1	
Operator's Manual	1	Read before operating
Engine Owner's Manual	1	Read before operating
Part's Catalog	1	Use for ordering parts
Operator video	1	View before operating

Installing and Adjusting the Handle

Installing the Handle

1. Remove the capscrew, washer, and lockwasher from the mounting pin on each side of the mower, as shown in Fig. 1.

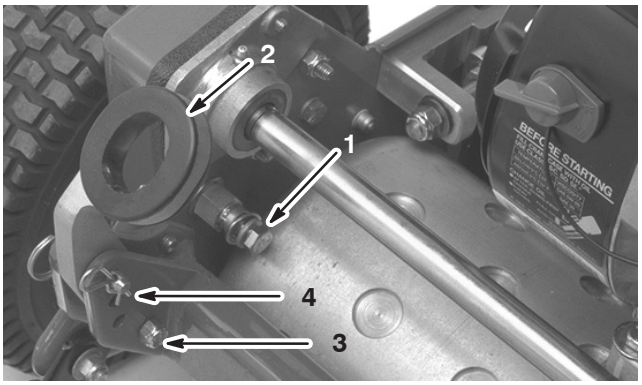

Figure 1

1. Mounting pins
2. Handle arms
3. Capscrew and locknut
4. Hairpin cotter and ring pin

2. Remove the capscrews and locknuts securing the bottom of the handle arms to each side of the mower, as shown in Figure 1.
3. Remove the hairpin cotters and ring pins securing the handle arms to the rear of the frame (Fig. 1).
4. Insert the handle ends thru the holes in the handle arms and align the holes with the mounting pins (Fig. 1).
5. Squeeze the handle ends inward and install them on the mounting pins (Fig. 2).

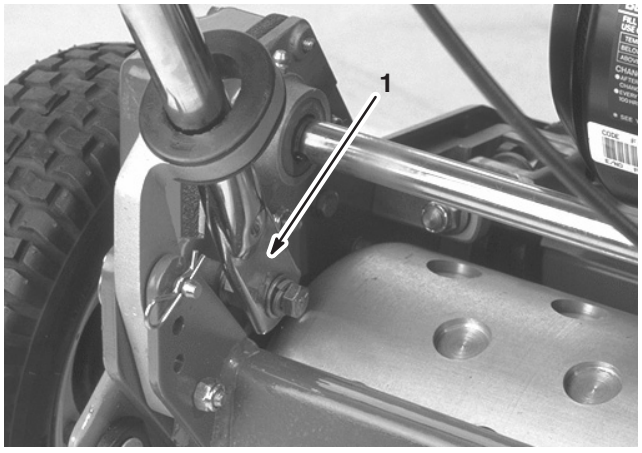

Figure 2

1. Handle end

6. Secure the handle ends to the mounting pins with the capscrews, washers, and lockwashers previously removed (Fig. 2).
7. Secure the bottom of handle arms to each side of the mower with the capscrews and locknuts previously removed (Fig. 2). Ensure that you install the bushings in the handle arm mounting holes.

Important Do not overtighten the capscrews. The handle arms must pivot freely.

8. Secure the handle arms to the rear of the frame with the hairpin cotters and ring pins previously removed (Fig. 2).
9. Secure the cables to the handle with cable ties.

Adjusting the Handle

1. Remove the hairpin cotters from the ring pins on each side of the mower (FIg. 1).
2. While supporting the handle, remove the ring pins from each side and raise or lower the handle to the desired operating position. (Fig. 1).
3. Install the ring pins and hairpin cotters.

Installing the Kick Stand

Model 04060 only

Note: Fasteners shipped loosely on kick stand.

1. Hook spring into hole in spring bracket and onto spring retainer while aligning kick stand with mounting holes in rear frame (Fig. 3).

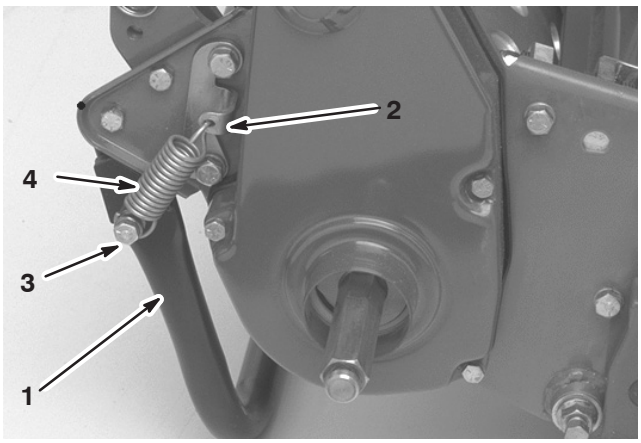

Figure 3

1. Kick stand
2. Spring bracket
3. Spring retainer
4. Spring

2. Mount kick stand to each side of frame with a capscrew, lockwasher, spacer flat washer and lock nut (Fig. 3). Spacer to be positioned in kick stand mounting hole.

Installing the Transport Wheels

1. Push the kick stand down with your foot and pull up on the handle to support the mower on the kick stand.
2. Apply #242 Loctite to the threads of the wheel shafts.
3. Thread the right hand wheel shaft into the drive pulley on the right side of the machine (Fig. 4).

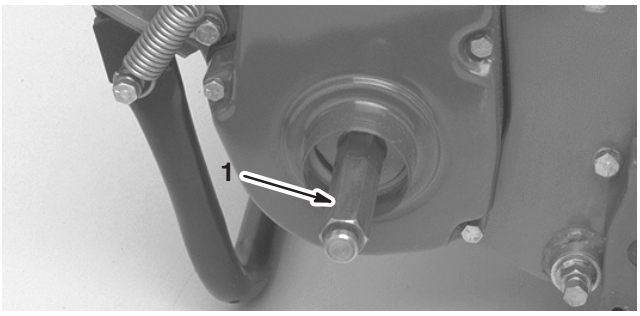

Figure 4

1. Right hand wheel shaft

4. Torque the shaft to 65 to 75 ft-lb. (88 to 101 N·m)

Note: The right hand wheel shaft has **left hand threads**.

5. Apply Never–Seez to the exposed ends of the axles and slide the wheel onto the axle (Fig. 5).
6. Pivot the wheel locking clip away from center of the wheel allowing it to slide farther onto the axle (Fig. 5).
7. Rotate the wheel back and forth until it slides completely onto the axle and the locking clip is secured in the groove on the axle shaft.



Figure 5

1. Locking clip

8. Repeat the procedure on the opposite side of the machine.
9. Inflate the tires to 12 to 15 psi. (574 to 718 Pa).

Before Operating

Adding Engine Oil

Fill the crankcase with the proper viscosity oil before starting the engine.

Crankcase capacity is approximately 20 oz. (0.6 l) .

Use high-quality engine oil that meets the following specifications:

API Classification Level Required: SJ, SK, SL or higher.

Preferred oil: SAE 30 (above 32°F)

Alternate oil: SAE 40 (above 50°F)
SAE 10W30 (up to 95°F)
SAE 5W30 (up to 50°F)

Toro Premium Engine oil is available from your distributor in either 15W–40 or 10W–30 viscosity. See the parts catalog for part numbers.

1. Position the machine on a level surface.

Important Be sure to keep the engine oil level between the upper and lower limits on the oil gauge. Engine failure may occur as a result of over filling or under filling the engine oil.

1. Position the mower so the engine is level (Fig. 6).

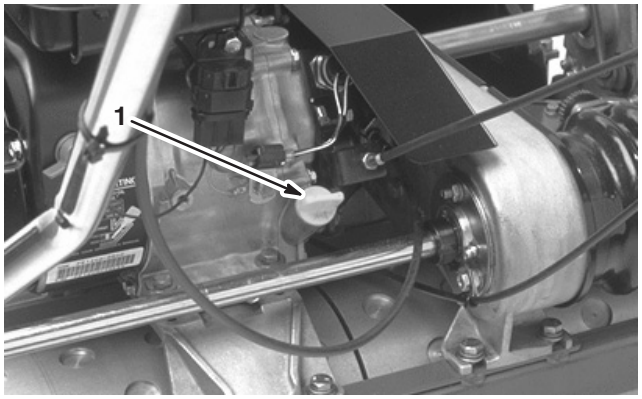

Figure 6

1. Oil level gauge

2. Clean around the oil level gauge.
3. Remove the gauge by rotating it counterclockwise.
4. Wipe the gauge clean and insert it into the filler port, without threading it into the port.
5. Remove the gauge and check the oil level.

6. If level is low, add only enough oil to raise level to filler opening.

Note: Check the oil each time the mower is used or after every 5 operating hours. Initially, change oil after the first 8 hours of operation; thereafter, change oil after every 50 hours of operation. **More frequent oil changes are required in dusty or dirty conditions.**

Filling the Fuel Tank

Important Never use methanol, gasoline containing methanol, gasoline containing more than 10% ethanol, gasoline additives, premium gasoline, or white gas because **engine fuel system damage could result.**

1. Clean around the fuel tank cap and remove the cap from the tank (Fig. 7).



Figure 7

1. Fuel tank cap

2. Using unleaded gasoline, fill the fuel tank no higher than to bottom of the filter screen. **Do not over fill the tank.**

3. Install the fuel tank cap and wipe up any spilled gasoline.

Danger

In certain conditions, gasoline is extremely flammable and highly explosive. A fire or explosion from gasoline can burn you and others and can damage property.

- **Fill the fuel tank outdoors, in an open area, when the engine is cold. Wipe up any gasoline that spills.**
- **Do not fill the fuel tank completely full. Add gasoline to the fuel tank until the level is 1 in. (25 mm) below the bottom of the filler neck. This empty space in the tank allows gasoline to expand.**
- **Never smoke when handling gasoline, and stay away from an open flame or where gasoline fumes may be ignited by a spark.**
- **Store gasoline in an approved container and keep it out of the reach of children. Never buy more than a 30-day supply of gasoline.**
- **Always place gasoline containers on the ground away from your vehicle before filling.**
- **Do not fill gasoline containers inside a vehicle or on a truck or trailer bed because interior carpets or plastic truck bed liners may insulate the container and slow the loss of any static charge.**
- **When practical, remove gas-powered equipment from the truck or trailer and refuel the equipment with its wheels on the ground.**
- **If this is not possible, then refuel such equipment on a truck or trailer from a portable container, rather than from a gasoline dispenser nozzle.**
- **If a gasoline dispenser nozzle must be used, keep the nozzle in contact with the rim of the fuel tank or container opening at all times until fueling is complete.**

Leveling the Rear Drum to the Reel

1. Position the machine on a flat, level surface, preferably a precision steel work plate.
2. Place a 1/4 x 1 in. (0.6 x 2.5 cm) flat steel strip, approx. 29 in. (73.6 cm) long, under the reel blades and against the front edge of the bedknife to prevent the bedbar from resting on the work surface.
3. Raise the front roller so only the rear drum and reel are on the surface.
4. Firmly press down on the machine above the reel so all reel blades contact the steel strip.
5. While pressing down on the reel, slide a feeler gauge under one end of the drum, then check the other end of the drum.

   If there is a gap between the drum and the work surface, greater than 0.010 in. (.025 cm), on either end, adjust the drum (proceed to step 6). If the gap is less than 0.010 in. (.025 cm) no adjustment is required.
6. Remove the rear belt cover from the right side of the machine (Fig. 8).

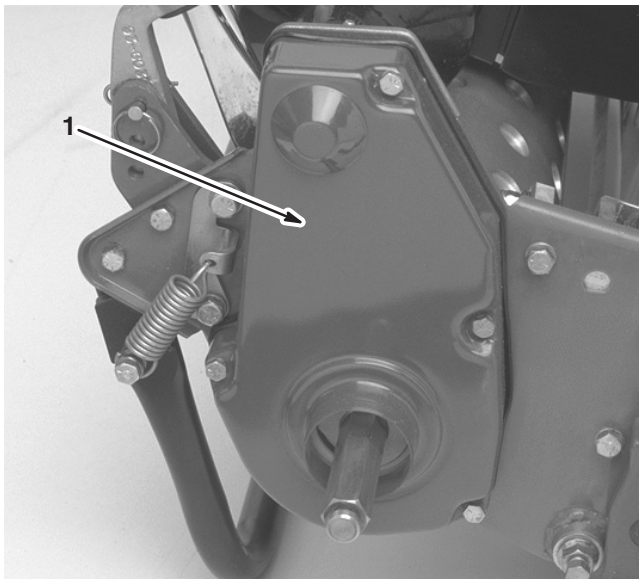

Figure 8

1. Traction drive belt cover

7. Rotate the drive pulley until the holes align with the 4 roller bearing flange screws (Fig. 9).
8. Loosen the 4 roller bearing screws and the screw securing the idler pulley.
9. Raise or lower the right side of the roller assembly until the gap is less than 0.010 in. (.025 cm).
10. Tighten the roller bearing screws.
11. Adjust the belt tension and tighten the idler pulley mounting screw (Fig. 9).

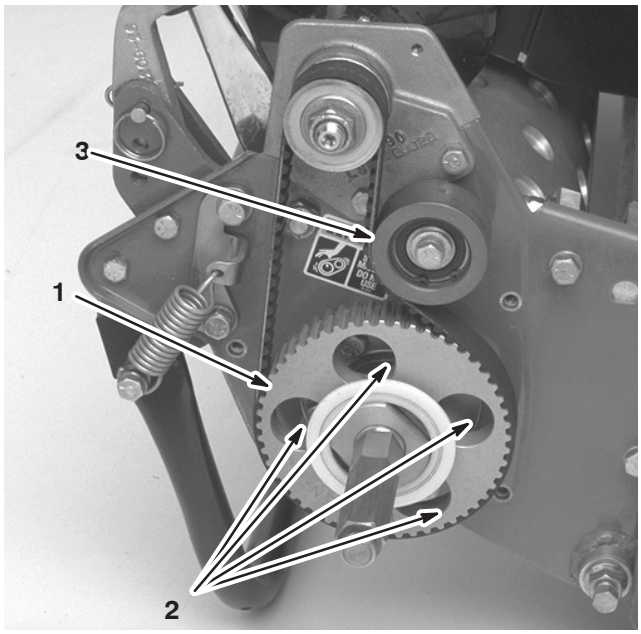

Figure 9

1. Drive pulley
2. 4 holes
3. Idler pulley

Adjusting the Bedknife to the Reel

The bedknife to reel adjustment is accomplished by loosening or tightening the bedbar adjusting screws, located on top of the mower.

1. Position the machine on a flat, level work surface.
2. Ensure that the reel contact is removed by turning the bedbar adjusting screws counterclockwise (Fig. 10 or 11).

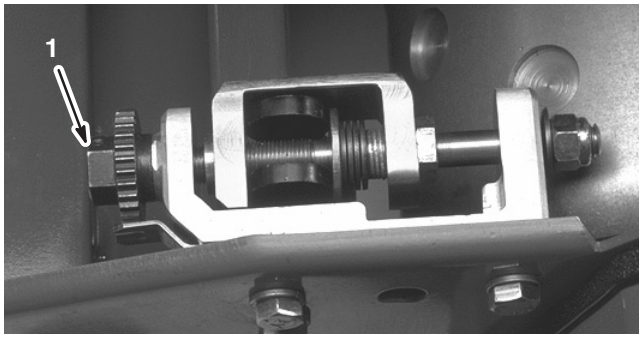

Figure 10

1. Bedbar adjusting screw (Greensmaster 1600)

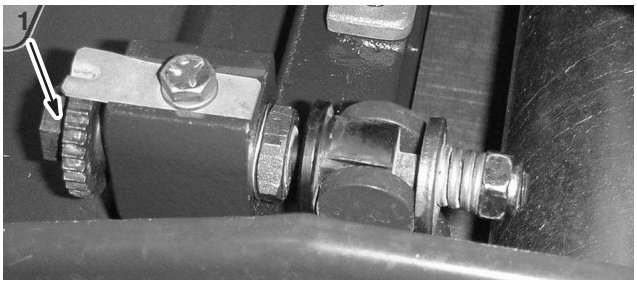

Figure 11

1. Bedbar adjusting screw (Greensmaster 1000)

3. Tilt the mower back on the handle to expose the bedknife and reel.
4. On one end of the front side of the reel, insert a long strip of newspaper between the reel and bedknife (Fig. 12). While slowly rotating the reel forward, turn the bedbar adjusting screw clockwise (on the same end of reel, one click at a time, until the paper is pinched lightly, when inserted from the front, parallel to the bedknife, which results in a slight drag when paper is pulled (Fig. 10 or 11).

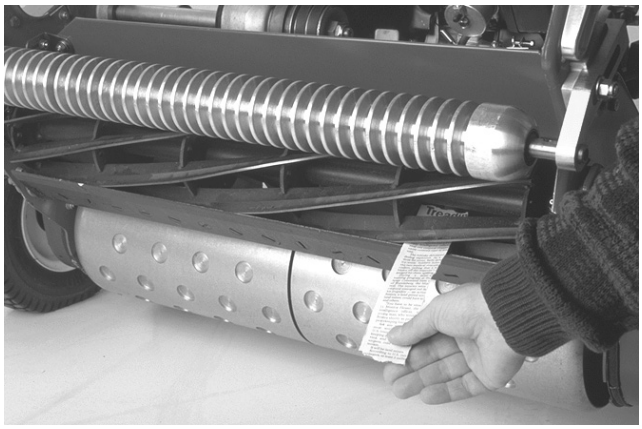

Figure 12

Note: Each time the adjusting screw is rotated one click clockwise, the bedknife moves 0.0007 in. (0.0017 cm) closer to the reel. Do not overtighten the adjusting screws.

5. Check for light contact at the other end of the reel using paper and adjust it as required.
6. After the adjustment is accomplished, check to see if the reel can pinch paper when inserted from the front and cut paper when inserted at a right angle to the bedknife (Fig. 12). It should be possible to cut paper with minimum contact between the bedknife and the reel blades. Should excessive reel drag be evident (more than 7 in.-lb. (0.79 N·m)), either backlap or grind the cutting unit to achieve the sharp edges needed for precision cutting; refer to the Toro reel sharpening manual.

Adjusting the Height-of-Cut

1. Verify that the rear roller is level and that the bedknife to reel contact is correct. Tip the mower back on the handle to expose the front and rear rollers and the bedknife.

2. Loosen the locknuts securing the height-of-cut arms to the height-of-cut brackets (Fig. 13).

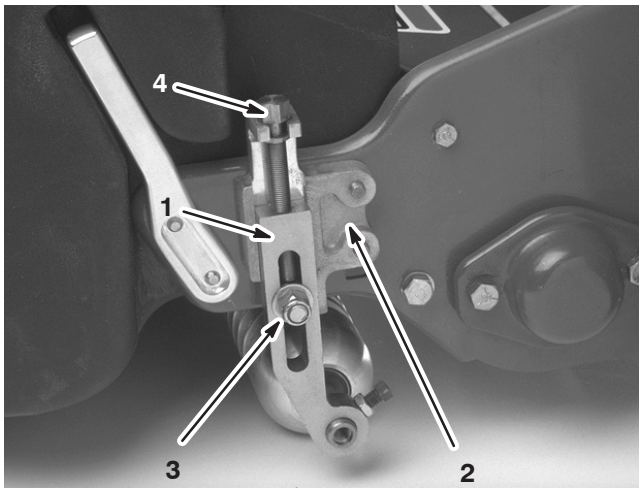

Figure 13

1. Height-of-cut arm
2. Height-of-cut bracket
3. Locknut
4. Adjusting screw

3. Loosen the nut on the gauge bar (Fig. 14) and set the adjusting screw to the desired height-of-cut. The distance between the bottom of the screw head and the face of the bar is the height-of-cut.

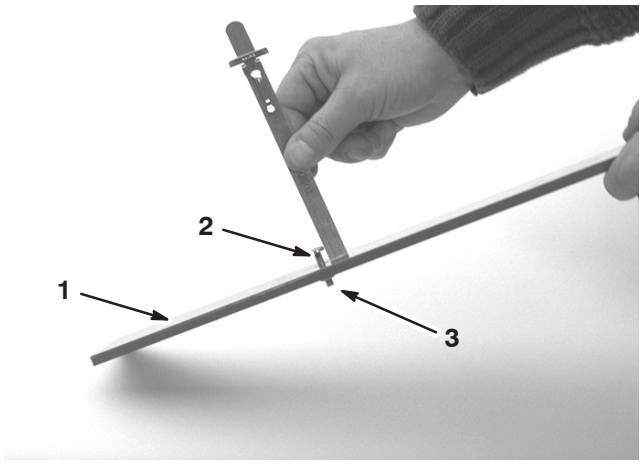

Figure 14

1. Gauge bar
2. Height adjusting screw
3. Nut

4. Hook the screw head on the cutting edge of the bedknife and rest the rear end of the bar on the rear roller (Fig. 15).

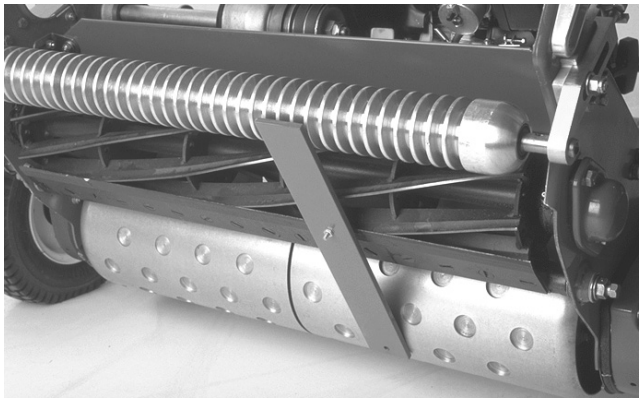

Figure 15

5. Rotate the adjusting screw until the roller contacts the front of the gauge bar.

6. Adjust both ends of the roller until the entire roller is parallel to the bedknife.

Important When set properly, the rear and front rollers will contact the gauge bar and the screw will be snug against the bedknife. This ensures the height-of-cut is identical at both ends of the bedknife.

7. Tighten nuts to lock the adjustment.

Important To avoid scalping on undulating turf, ensure that the roller supports are positioned rearward (the roller closer to the reel).

Note: The front roller can be put in three different positions (Fig. 16), depending on the application and needs of the user.

- Use the front position when a groomer is installed.
- Use the middle position without a groomer.
- Use the third position in extremely undulating turf conditions.

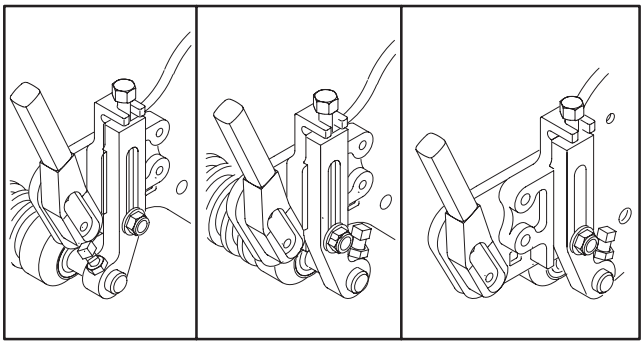

Figure 16

Adjusting the Grass Shield Height

Adjust the shield to ensure proper grass clipping discharge into the basket.

1. Measure the distance from top of the front support rod to the front lip of the shield at each end of the cutting unit (Fig. 17).

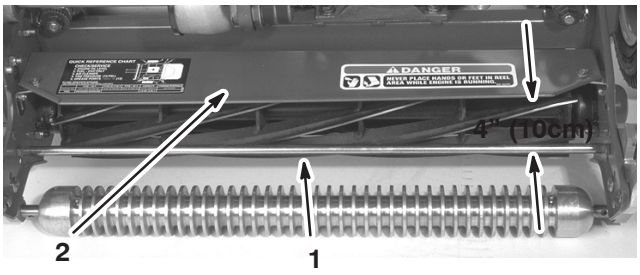

Figure 17

1. Support rod
2. Shield

2. The height of the shield from the support rod for normal cutting conditions should be 4 in. (10 cm). Loosen the capscrews and nuts securing each end of the shield to the sideplate and adjust the shield to the correct height.
3. Tighten the fasteners.

Note: The shield can be lowered for drier conditions (clippings fly over top of basket) or raised to allow for heavy wet grass conditions (clippings build up on rear of basket).

Adjusting the Cut-off Bar

Adjust the cut-off bar to ensure that the clippings are cleanly discharged from the reel area.

1. Loosen the screws securing the top bar (Fig. 18) to the cutting unit.

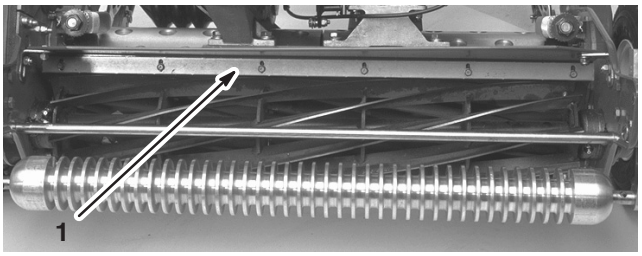

Figure 18

1. Cut-off bar

2. Insert a 0.060 in. (.15 cm feeler gauge between the top of the reel and the bar and tighten the screws.
3. Ensure that the bar and reel are equal distance apart across the entire reel.

Note: The bar is adjustable to compensate for changes in turf conditions. Adjust the bar closer to the reel when the turf is extremely wet. By contrast, adjust the bar further away from the reel when turf conditions are dry. The bar should be parallel to the reel to ensure optimum performance. Adjust the bar whenever the shield height is adjusted or when the reel is sharpened on a reel grinder.

Installing the Grass Basket

Grasp the basket by the top lip and slide it onto the basket mounting rods (Fig. 19).

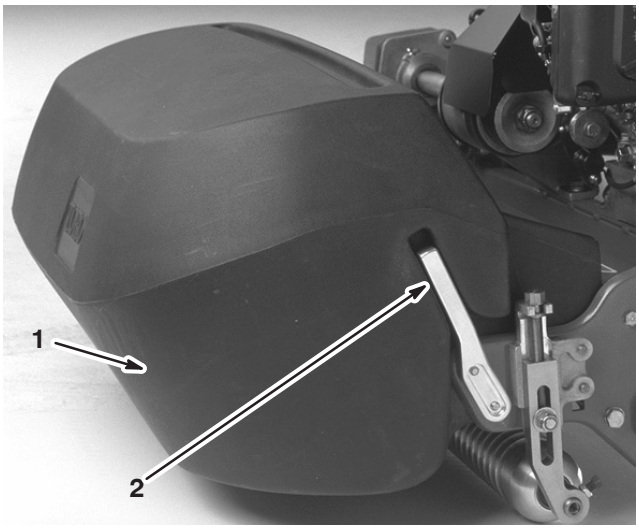

Figure 19

1. Grass basket
2. Basket mounting rod

Note: Model 04060 only – When cutting in higher heights-of-cut, the basket may be lowered by removing each basket mounting rod and installing each on the opposite side of the machine.

Checking the Operation of the Interlock Switch

1. Place the traction lever into the Engage position and the engine controls in the starting position.
2. Attempt to start the engine.

   The engine should not start. If the engine starts, the interlock switch needs service. Correct the problem before operating; refer to Adjusting the Interlock Switch, page 29.

Operation

Note: Determine the left and right sides of the machine from the normal operating position.

Controls

Throttle Control (Fig. 20)

Located on the rear right side of the control panel. The lever connects to and operates the throttle linkage to the carburetor. The engine speed can be varied from 1600 to 3600 RPM.

Traction Drive Lever (Fig. 20)

Located on the front right side of the control panel. The lever has two positions: Neutral and Forward. Pushing the lever forward engages the traction drive.



Figure 20

1. Throttle control
2. Traction drive lever
3. Service/parking brake
4. Operator presence control (optional)

Service/Park Brake (Fig. 20)

Located on the left front side of the control panel. The brake can be used to slow or stop the machine. The brake can also be used as a parking brake. Pulling the lever back over center will set the parking brake. The brake must be released before the traction drive is engaged.

Operator Presence Control (Optional) (Fig. 20)

Located on the rear of the handle. Push the operator presence control against the handle. The operator presence control must be engaged before moving the traction drive lever or the engine will stop.

Reel Drive Lever (Fig. 21)

Located on the right front corner of the machine. The lever has two positions: Engage and Disengage. Pull up on the lever to engage the reel or push it down to disengage the reel.

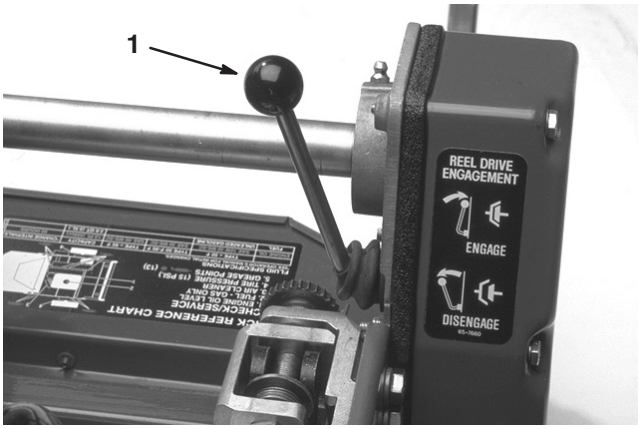

Figure 21

1. Reel drive lever

Choke Lever (Fig. 22)

Located on the left front of the engine. The lever has two positions: Run and Choke. Move the lever to the Choke position when starting a cold engine. After the engine starts move the lever to the Run position.

Fuel Shut-off Valve (Fig. 22)

Located on the left front of the engine. The valve has two positions: Closed and Open. Move the lever to the Closed position when storing or transporting the machine. Open the valve before starting the engine.

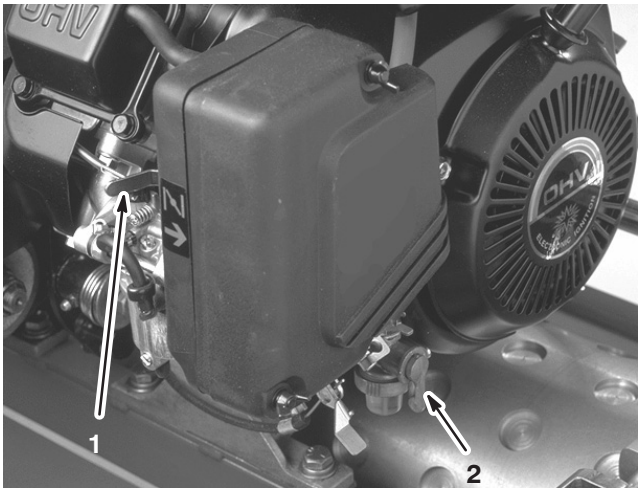

Figure 22

1. Choke lever
2. Fuel shut-off valve

On/Off Switch (Fig. 23)

Located on the rear of the engine. Move the switch to the On position to start the engine and the Off position to stop the engine.

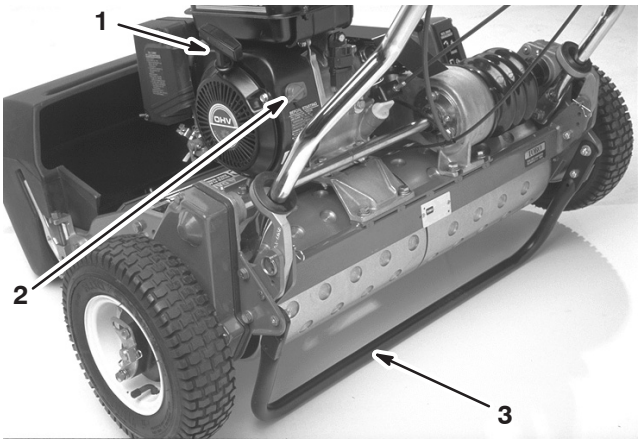

Figure 23

1. Recoil starter
2. On/Off switch
3. Kick stand

Recoil Starter (Fig. 23)

Pull the recoil starter handle to start the engine.

Kick Stand (Fig. 23)

Mounted to rear of the machine, the kickstand is used to raise rear of the machine for installation or removal of the transport wheels.

Starting the Engine

Note: Ensure that the spark plug wire is installed on the spark plug.

1. Ensure that the traction (Fig. 20) and reel drive (Fig. 21) levers are in the Disengaged position.

Note: Engine will not start if traction lever is in the engaged position.

2. Open the fuel shut-off valve on the engine (Fig. 22).
3. Move the On/Off switch (Fig. 23) to the On position.
4. Move the throttle control (Fig. 20) to the Fast position.
5. Move the choke lever (Fig. 22) to the half-open position when starting a cold engine. The choke may not be required when starting a warm engine.
6. Pull the recoil starter handle out until positive engagement results, then pull vigorously to start the engine.

Important Do not pull the recoil rope to its limit or let go of the starter handle when rope is pulled out because the rope may break or the recoil assembly may be damaged.

7. Close the choke as the engine warms up.

Stopping the Engine

1. Move the traction and reel drive controls to the Disengaged position, the throttle control to the Slow position, and the On/Off switch to the Off position.
2. Pull the spark plug wire off of the spark plug to prevent the possibility of accidental starting before storing the machine.
3. Close the fuel shut-off valve before storing or transporting the mower in a vehicle.

Driving the Machine in Transport

1. Push the kick stand down with your foot and pull up on the handle to raise the rear of mower and install the transport wheels.
2. To release the kickstand, pull up on the handle, push the mower forward, and then lower the rear of mower onto the transport wheels.
3. Ensure that the traction and reel drive controls are in the Disengaged position and start the engine.
4. Set the throttle control to Slow, tip the front of the machine up gradually, engage the traction drive and slowly increase the engine speed.

5. Adjust the throttle to operate the mower at the desired ground speed and transport the mower to the desired destination.

Preparing to Mow

1. Return the traction control lever to the Disengage position, the throttle to the Slow position, and stop the engine.
2. Push the kickstand down with your foot and pull up and back on the handle to raise the wheels off of the ground.
3. Push the locking clips on the wheels out of the grooves in the shafts.
4. Slide the wheels off of the shafts.
5. Move the unit off of the kickstand.

Mowing Tips

Proper use of the machine provides the smoothest turf cutting available. The fundamental suggestions given will provide the utmost performance from your mower.

Important Excessive operation of the cutting unit with the absence of grass clippings (lubricant) can damage the cutting unit.

Before Mowing

- Ensure that the mower is carefully adjusted and is set evenly on both sides of the reel. Improper mower adjustment is magnified many times over in the appearance of the clipped turf.
- Remove all foreign objects from the turf prior to mowing.
- Ensure that everyone, especially children and pets, are clear of the work area.

Mowing Techniques

- Mow a green in a straight back and forth direction, across the green.
- Avoid circular mowing or turning the mower on a green because scuffing may occur. Turn the mower off of the green by raising the cutting reel (pushing the handle down) and turning on the traction drum.
- Mow at a normal walking pace. Fast speed saves very little time and will result in an inferior mowing job.

Mowing

1. Start the engine, set the throttle at reduced speed, push down on the handle to raise the cutting unit, move the traction lever to the Engaged position, and transport the mower onto collar of the green.
2. Move the traction lever to the Disengaged position and move the reel drive lever to the Engaged position.
3. Move the traction lever to the Engaged position, increase the throttle speed until the mower is traveling at the desired ground speed, drive the mower onto the green, lower the front of the mower, and commence operation.
4. When finished mowing, drive off of the green, move the traction control lever to the Disengage position, stop the engine and push the reel drive lever into the Disengage position.
5. Empty the grass catcher of clippings, install the grass catcher, and commence transport operation.

Maintenance

Note: Determine the left and right sides of the machine from the normal operating position.

Recommended Maintenance Schedule

Maintenance Service Interval	Maintenance Procedure
After first 8 Hours	• Engine oil—change
25 Hours	• Air filter pre-cleaner—service • Grease fittings—lubricate • Fasteners—check and tighten
50 Hours	• Fuel filter and sediment bowl—clean • Traction drive belts—adjust • Engine oil—change
100 Hours	• Cut-off bar—check adjustment • Air cleaner filter—service
200 Hours	• Combustion chamber—clean • Spark plug—replace • Valves—adjust • Head bolts—torque
Every 2 years	• Interlock switches—replace

Important Refer to your engine operator's and service manuals for additional maintenance procedures.

Daily Maintenance Checklist

Duplicate this page for routine use.

Maintenance Check Item	For the week of: Mon.	Tues.	Wed.	Thurs.	Fri.	Sat.	Sun.
Safety interlock operation							
Parking brake operation							
Fluid level							
Engine oil level							
Air filter							
Clean the engine cooling fins							
Unusual engine noise							
Unusual operating noise							
Reel to bedknife adjustment							
Height-of-cut adjustment							
Grease all fittings							
Touch-up damaged paint							

Notation for Areas of Concern

Inspection performed by:		
Item	**Date**	**Information**
1		
2		
3		
4		
5		
6		
7		
8		

Greasing the Machine

The 13 grease fittings on the mower should be greased at least every 25 hours. Lubricate using a No. 2 multi–purpose lithium base grease. A hand operated grease gun is recommended for best results.

The grease fitting locations are as follows:

- 2 on the front roller (Fig. 24)
- 2 on the reel bearings (Fig. 24)
- 2 on the drum axles (Fig. 25)
- 3 on the differential (Fig. 25)
- 2 on the reel countershaft bearings (Fig. 26)
- 2 on the belt idler pivots (Fig. 27).

1. Wipe each grease fitting with a clean rag.
2. Pump grease into each fitting until it begins to get difficult to pump the gun.

Important Do not apply too much pressure or grease seals will become permanently damaged.

3. Wipe off excess grease.

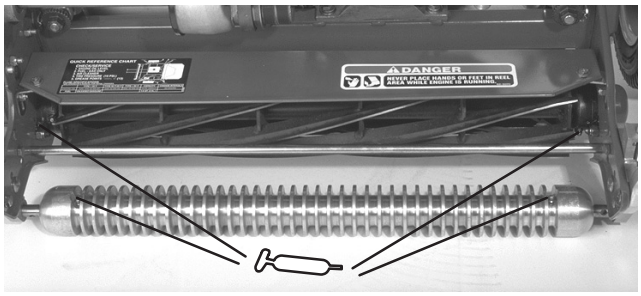

Figure 24

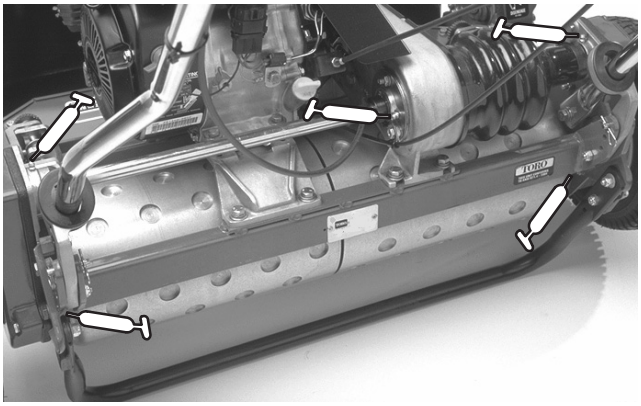

Figure 25

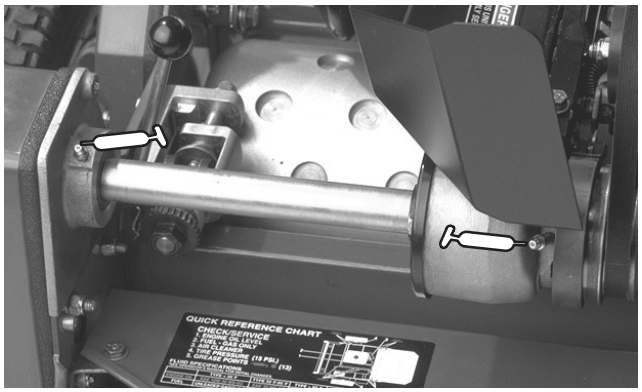

Figure 26

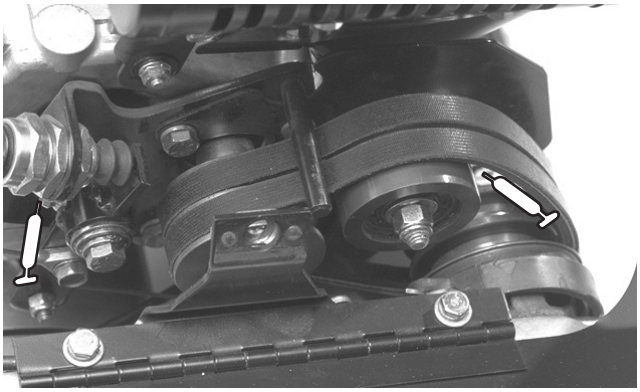

Figure 27

Checking and Changing Engine Oil

Check the oil level each time the mower is used. Initially, change oil after the first 8 hours of operation; thereafter, change oil after every 50 hours of operation. More frequent oil changes are required in dusty or dirty conditions.

Checking the Oil Level

1. Position the mower so the engine is level.
2. Clean around the oil level gauge (Fig. 28).

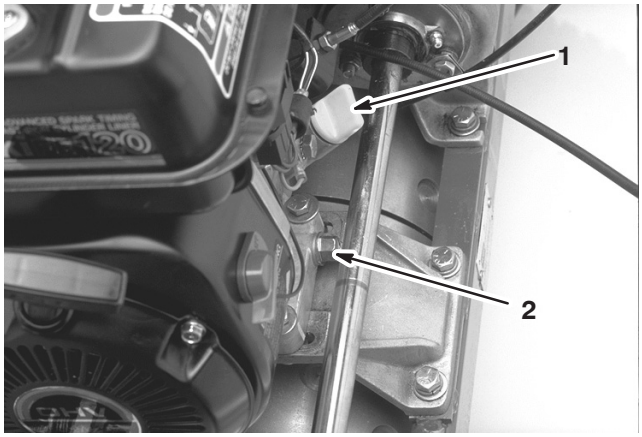

Figure 28

1. Oil level gauge
2. Drain plug

3. Remove the oil level gauge by rotating it counterclockwise.
4. Wipe the oil level gauge clean and insert it into the filler port. Do not screw it into the port.
5. Remove the gauge and check the level of the oil.
6. If the level is low, add only enough oil to raise the level to the filler opening.
7. Install the oil level gauge and wipe up any spilled oil.

Changing the Oil

1. Start and run the engine for a few minutes to warm the engine oil.
2. Place a drain pan at the rear of machine, under the drain plug (Fig. 28).
3. Remove the drain plug.
4. Push down on the handle to tip the mower and the engine backward, allowing more oil to run into the drain pan.
5. Install the drain plug and refill the crankcase with the proper oil; refer to Checking the Oil Level.

Servicing the Air Cleaner

Normally, clean the air cleaner after every 25 operating hours. Clean it more frequently when the mower is operated in dusty or dirty conditions.

1. Ensure that the wire is off of the spark plug.
2. Remove the wing nuts securing the air cleaner cover to the air cleaner and remove the cover (Fig. 29).
3. Clean the cover thoroughly (Fig. 29).

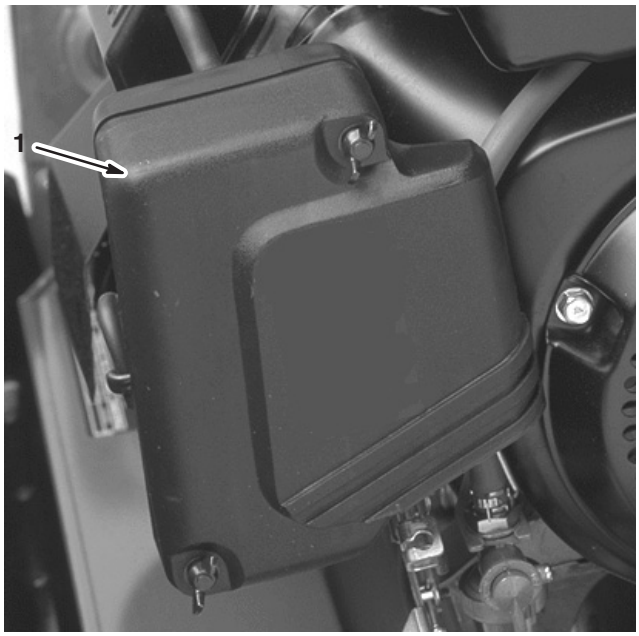

Figure 29

1. Air cleaner cover

4. If the foam element is dirty, remove it from the paper element (Fig. 30) and clean it thoroughly.

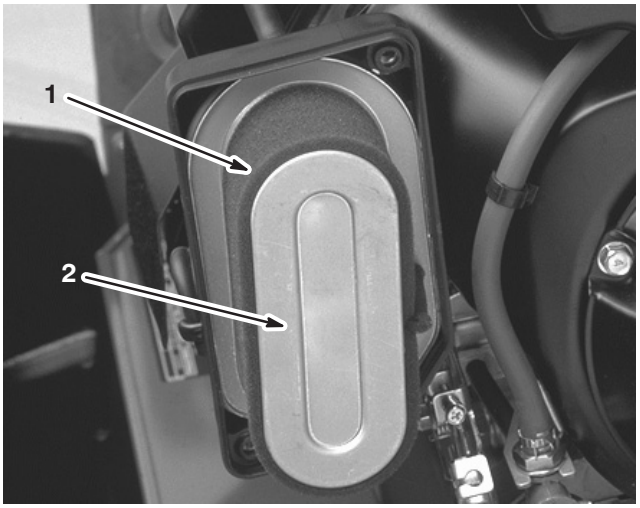

Figure 30

1. Foam element 2. Paper element

A. Wash the foam element in a solution of liquid soap and warm water.

B. Squeeze to remove dirt, but do not twist it because the foam may tear.

C. Dry it by wrapping it in a clean rag. Squeeze rag and foam element to dry it.

D. Saturate the element with clean engine oil.

E. Squeeze the element to remove excess oil and to distribute the oil thoroughly. An oil damp element is desirable.

5. Check condition of the paper element. Clean or replace it as required.

6. Install the foam element, paper element, and air cleaner cover.

Important **Do not operate the engine without the air cleaner element because extreme engine wear and damage will likely result.**

Replacing the Spark Plug

Use an **NGK BPR 5ES** spark plug or equivalent. The correct air gap is 0.028 to 0.032 in. (0.05 to 0.07 cm). Remove the plug after every 100 operating hours and check its condition.

1. Pull the wire off of the spark plug.

2. Clean around the spark plug and remove it from the cylinder head (Fig. 31)

Important **Replace a cracked, fouled, or dirty spark plug. Do not sand blast, scrape, or clean electrodes because engine damage could result from grit entering the cylinder.**

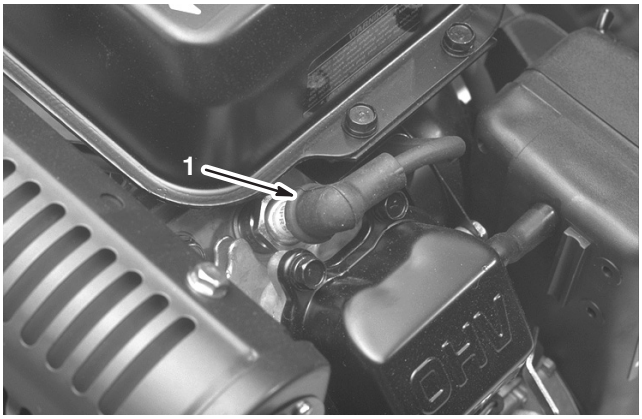

Figure 31

1. Spark plug

3. Set the air gap at 0.028 to 0.032 in. (0.05 to 0.07 cm) (Fig. 32).

4. Install the correctly gapped spark plug and tighten it to 17 ft.-lb. (23 N·m).

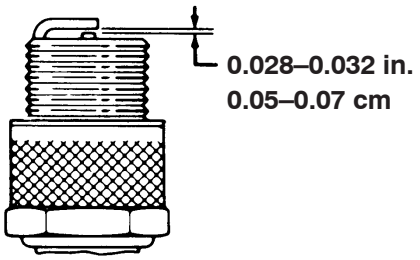

Figure 32

Cleaning the Fuel Filter

Initially, clean the fuel filter after the first 20 hours of operation; thereafter clean it after every 50 hours operation.

1. Close the fuel shut off valve and unscrew the bowl from the filter body (Fig. 33).

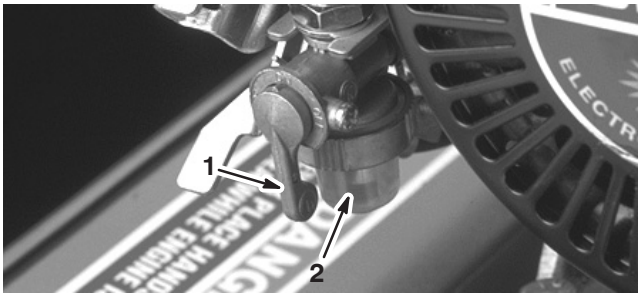

Figure 33

1. Shut-off valve 2. Bowl

2. Clean the bowl and filter in clean gasoline and install it.

Adjusting Belts

Ensure that the belts are properly tensioned to ensure proper operation of the machine and unnecessary wear. Check belts frequently.

Adjusting the Reel Drive Belt

Check the tension by pressing the belt at mid span of the pulleys with 3 to 5 lb. of force. The belt should deflect 1/4 in. (0.63 cm). If the deflection is incorrect, adjust the belt as follows:

1. Remove the belt cover mounting screws and the belt cover (Fig. 34).

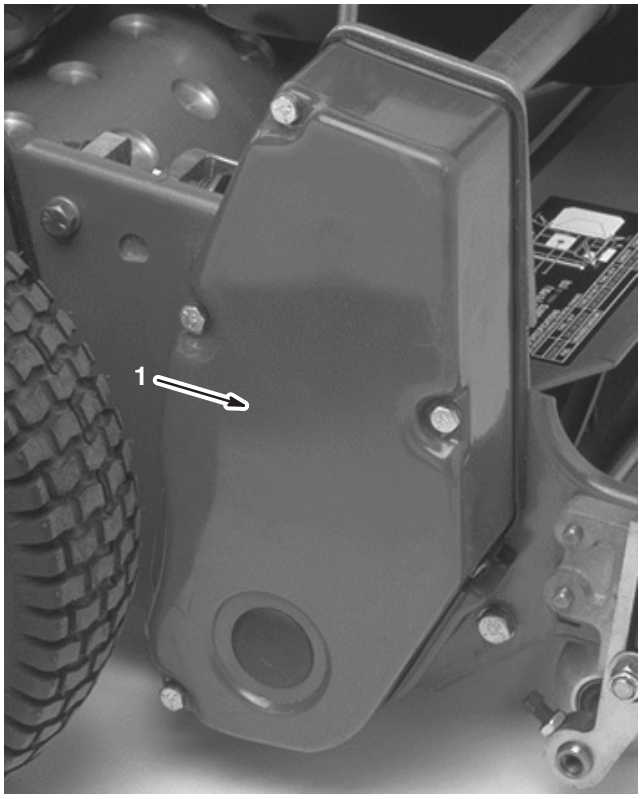

Figure 34

1. Reel drive belt cover

2. Loosen the idler pulley mounting nut and pivot the idler pulley clockwise against the backside of the belt until you attain the desired belt tension.

Important Do not over tension the belt.

3. Tighten the nut to lock the adjustment.
4. Install the belt cover by placing it in position.
5. While maintaining a slight gap between the cover seal and the side plate, install each mounting bolt until the threads engage in the insert. The gap allows visual alignment of the bolts to the threaded inserts.
6. After all bolts are installed, tighten them until the stand-offs inside the cover contact the side plate. Do not overtighten.

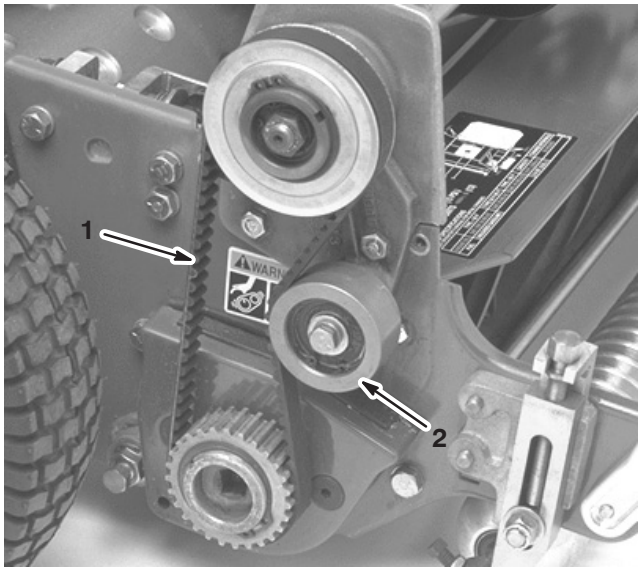

Figure 35

1. Reel drive belt
2. Idler pulley

Adjusting the Traction Drive Belt

Check the tension by pressing the belt at mid span of the pulleys with 3 to 5 lb. (1.5 to 2.3 kg) of force. The belt should deflect 1/4 in. (0.63 cm). If the deflection is incorrect, adjust the belt as follows:

1. Remove the belt cover mounting screws and belt cover to expose the belt (Fig. 36).

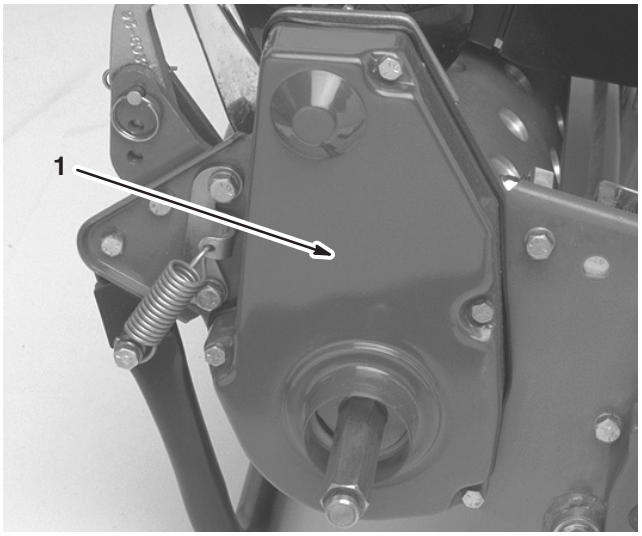

Figure 36

1. Traction drive belt cover

2. Loosen the idler pulley mounting nut and pivot the idler pulley clockwise against the backside of the belt until the desired belt tension is attained (Fig. 37).

Important Do not over tension the belt.

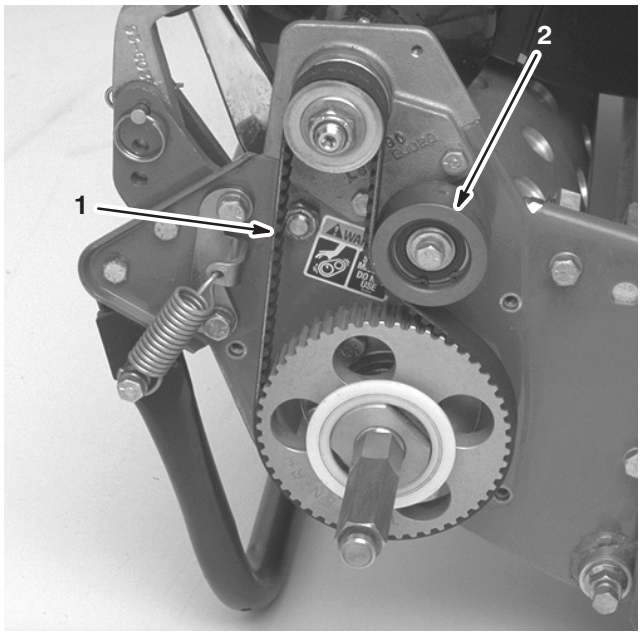

Figure 37

1. Traction drive belt
2. Idler pulley

3. Tighten the nut to lock adjustment.
4. Install the belt cover by placing it in position.
5. While maintaining a slight gap between the cover seal and the side plate, install each mounting bolt until the threads engage in the insert. The gap allows visual alignment of the bolts to the threaded inserts.
6. After all bolts are installed, tighten them until the stand-offs inside the cover contact the side plate. Do not overtighten.

Adjusting the Differential Belt

Check the tension by pressing the belt at mid span of the pulleys with 4 to 6 lb. of force. The belt should deflect 1/4 in. (0.63 cm). If the deflection is incorrect, adjust the belt as follows:

1. Remove the capscrews securing the front and rear sections of the differential cover to the differential housing and slide the cover sections away to expose the belt.

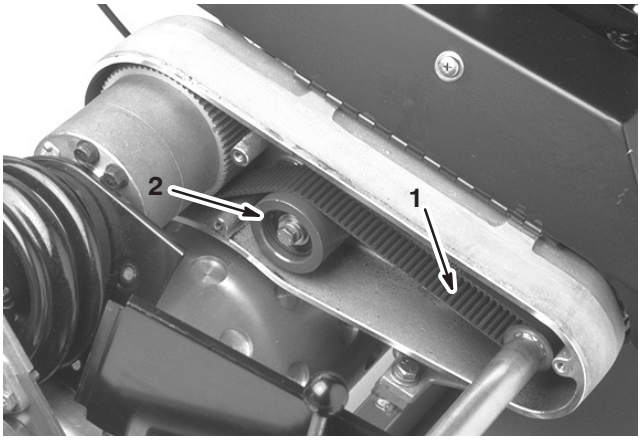

Figure 38

1. Differential belt
2. Idler pulley

2. Loosen the idler pulley mounting nut and pivot the idler pulley clockwise against the backside of the belt until the desired belt tension is attained.

Important Do not over tension the belt.

3. Tighten the nut to lock adjustment.
4. Install the belt cover by placing it in position.
5. While maintaining a slight gap between the cover seal and the side plate, install each mounting bolt until the threads engage in the insert. The gap allows visual alignment of the bolts to the threaded inserts.
6. After all bolts are installed, tighten them until the stand-offs inside the cover contact the side plate. Do not overtighten.

Adjusting the Primary V-Belts

1. To adjust the belt tension on primary V-belts, first check the adjustment of the traction control. Refer to Adjusting the Traction Control, page 28. If unable to attain the 3 to 5 lb. (1.5 to 2.3 kg) force required in adjusting the traction control, proceed to next step.
2. Loosen the retainer securing the V-belt cover and pivot the cover open.

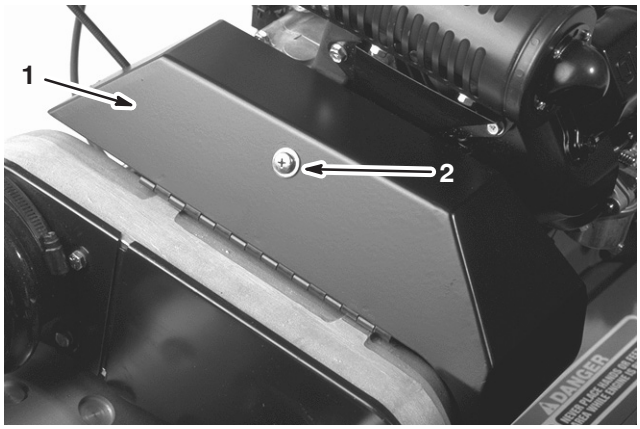

Figure 39

1. V-belt cover
2. Retainer

3. To increase belt tension, loosen the engine mounting bolts and move engine backwards in the slots.

Important Do not over tension the belt.

4. Tighten the mounting bolts.

Note: The distance between the centers of the driver and the driven pulleys should be approximately 5.18 in. (13.15 cm) after new V-belts are installed.

5. After tensioning the primary V-belts, check the alignment of the engine output shaft pulley and the countershaft pulley with a straight edge.

6. If the pulleys are misaligned, loosen the screws securing the engine mounting base to the mower frame and slide the engine from side to side until the pulleys are aligned within 0.030 in. (0.07 cm).

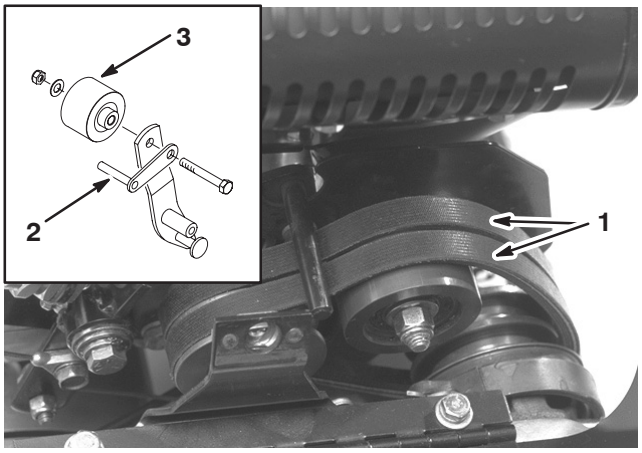

Figure 40

1. Primary V-belts
2. Belt guide
3. Idler pulley

7. Tighten the mounting screws and check the alignment.

8. To push or pull the machine easier without starting the engine, adjust the belt guide (Fig. 40, inset) as follows:

   A. Engage the clutch.

   B. Loosen the capscrew securing the idler pulley and belt guide to the idler arm.

   C. Rotate the belt guide clockwise until a gap of approximately 0.06 in. (0.15 cm) is obtained between the guide finger and the backside of the drive belts.

   D. Tighten the capscrew and locknut securing the idler pulley and belt guide to the idler arm.

9. Close the cover and secure the retainer.

Replacing the Differential Belt

1. Remove the capscrews securing the traction drive and reel drive belt covers to the right side plate and remove the belt covers.

2. Loosen the idler pulley mounting nut, on each idler pulley, and pivot each idler pulley counterclockwise away from the backside of each belt to release belt tension.

3. Remove the belts.

4. Remove the capscrews securing the front and rear sections of the differential cover to the differential housing and slide the cover sections away to expose the belt (Fig. 41).

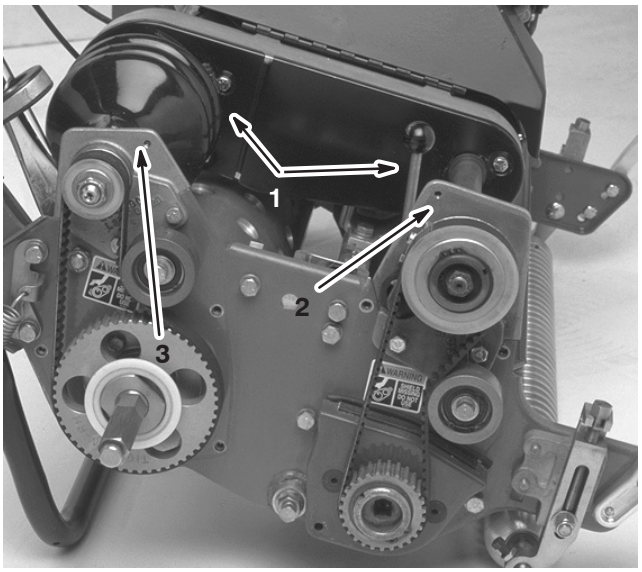

Figure 41

1. Differential cover sections
2. Front clutch housing
3. Right rear bearing housing

5. Loosen the idler pulley mounting nut on the differential idler pulley and pivot the idler pulley counterclockwise away from the backside of the belt to release the belt tension.
6. Remove the 2 capscrews and locknuts securing the front clutch housing to the side plate (Fig. 41).
7. Rotate the housing 180° so the bottom of the housing points upward.
8. Remove the 2 capscrews and locknuts securing the right rear bearing housing to the side plate (Fig. 41).
9. Rotate the housing 180° so the bottom of the housing points upward. Remove old belt.
10. Slide the new belt over the rotated housing covers, the differential cover sections, and onto the differential pulleys.
11. Ensure that the idler pulley is positioned against the backside of belt.
12. Rotate both housings back into the upright position and secure them to the sideplate with the capscrews and nuts previously removed.
13. Adjust the differential belt tension; refer to Adjusting the Differential Belt, page 27.
14. Adjust the belt tension on the traction drive and reel drive belts; refer to Adjusting the Traction Drive Belt, page 26, and Adjusting the Reel Drive Belt, page 26.
15. Install the differential, traction drive, and reel drive covers.

Adjusting the Traction Control

If the traction control does not engage or it slips during operation, an adjustment is required.

1. Move the traction control to the Disengaged position.
2. Loosen the retainer securing the V-belt cover and pivot the cover open (Fig. 39).
3. To increase the cable tension, loosen the front cable jam nut and tighten the back cable jam nut (Fig. 42) until a force of 3 to 5 lb. (1.5 to 2.3 kg) is required to engage the traction control. Measure the force at the control knob.
4. Tighten the front cable jam nut.
5. Close the cover and secure the retainer.
6. Check the control operation.

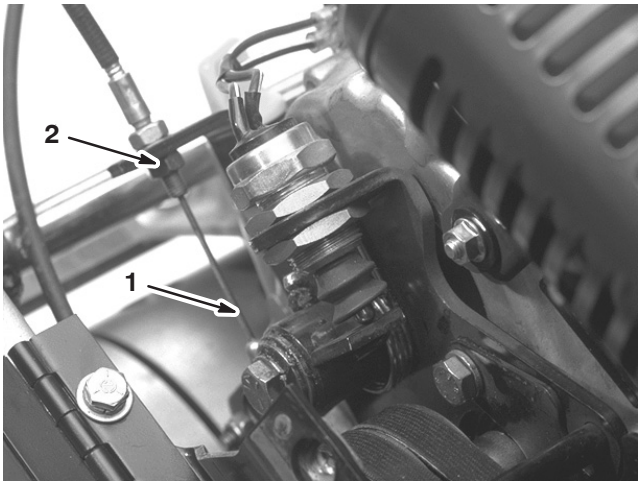

Figure 42

1. Traction cable
2. Front jam nut

Adjusting the Service/Park Brake

If the service/park brake slips when operated, an adjustment is required.

1. Move the service/park brake lever to the Off position.
2. Loosen the retainer securing the V-belt cover and pivot the cover open (Fig. 43).

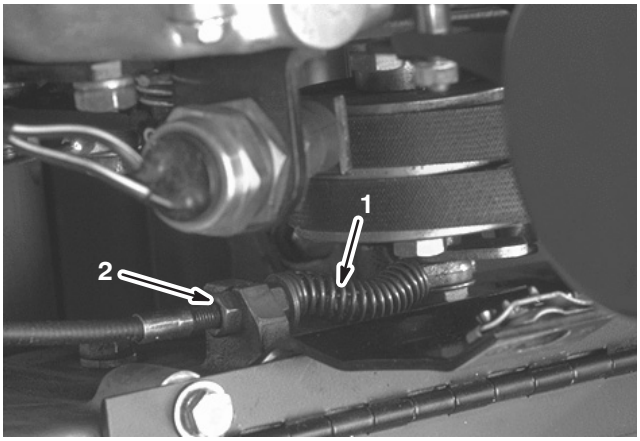

Figure 43

1. Service/park brake cable
2. Front jam nut

3. To increase the cable tension, loosen the front cable jam nut and tighten the back cable jam nut (Fig. 43) until a force of 3 to 5 lb. (1.5 to 2.3 kg) is required to engage brake. Measure the force at the lever knob. Do not over adjust it so that the brake band drags.
4. Close the cover and secure the retainer.

Adjusting the Interlock Switch

To adjust or replace the interlock switch, complete the following procedure:

1. Ensure that the engine is Off and the traction lever is disengaged.
2. Loosen the 2 switch mounting nuts (Fig. 44) and move the switch until the switch plunger is depressed 0.12 to 0.24 in. (0.3 to 0.6 cm) (switch closed).

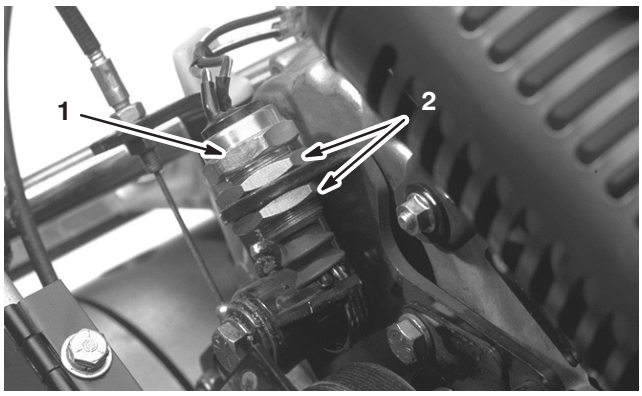

Figure 44

1. Interlock switch
2. Mounting nuts

3. Tighten the switch mounting nuts.
4. Engage the traction lever and verify that the switch plunger is depressed between 0.12 to 0.24 in. (0.3 to 0.65 cm).
5. Adjust the switch as required.

Servicing the Bedbar

Greensmaster 1600 only

Removing the Bedbar

1. Turn the bedbar adjuster screw, counterclockwise, until the channel bottoms out in the adjuster frame (Fig. 45).

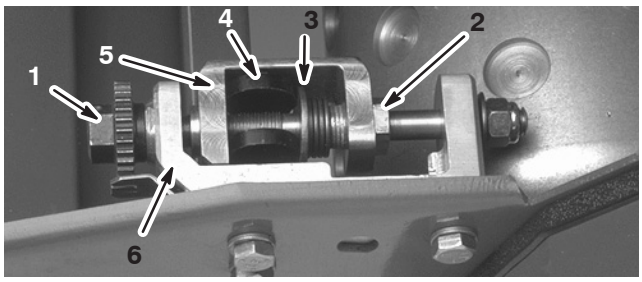

Figure 45

1. Bedbar adjusting screw
2. Spring tension screw
3. Thrust Washer
4. Bedbar
5. Channel
6. Adjuster frame

2. Using a 7/8 in. standard wrench, back out the spring tension screw until the thrust washer is no longer tensioned against the bedbar (Fig. 45).
3. On each side of the machine, loosen the jam nut securing the bedbar bolt (Fig. 45).

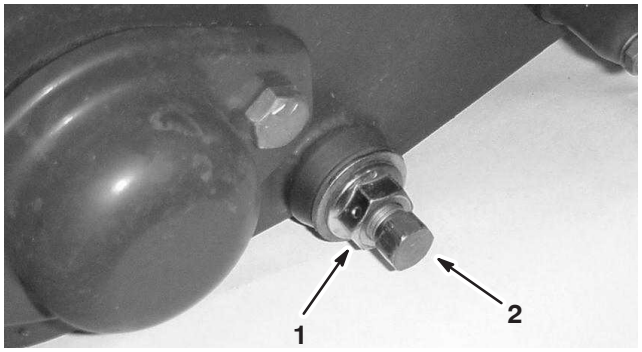

Figure 46

1. Jam nut
2. Bedbar bolt

4. Remove each bedbar bolt allowing the bedbar to be pulled downward and removed from the machine. Save the 2 nylon and 2 stamped steel washers on each end of bedbar (Fig. 45).

Installing the Bedbar

1. Install the bedbar, positioning the mounting ears between the thrust washer and the channel on the bedbar adjuster.
2. Secure the bedbar to each side plate with the bedbar bolts (flange nuts on the bolts) and 8 washers. Position a nylon washer each side of the side plate boss. Place a steel washer outside each of the nylon washers.
3. Torque bolts to 240 to 320 in.-lb. (27 to 36 N·m).
4. Tighten the flange nuts until the thrust washers just rotate freely.
5. Adjust the bedbar; refer to Adjusting the Bedknife to the Reel, page 14.

Servicing the Bedbar

Greensmaster 1000 only

Removing the Bedbar

1. Turn bedbar adjuster screw, counterclockwise, to back bedknife away from reel (Fig. 47).

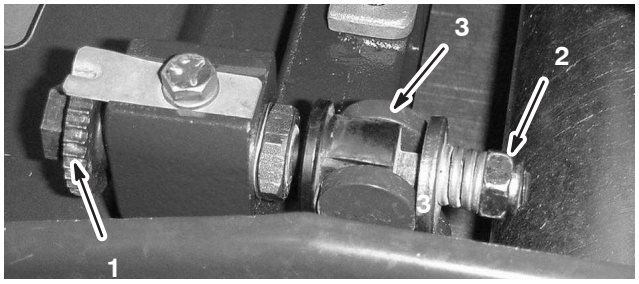

Figure 47

1. Bedbar adjusting screw
2. Spring tension nut
3. Bedbar

2. Back out the spring tension nut, until the washer is no longer tensioned against the bedbar (Fig. 47).

3. On each side of the machine, loosen the jam nut securing the bedbar bolt (Fig. 48).

4. Remove each bedbar bolt allowing bedbar to be pulled downward and removed from machine. Save the 2 nylon and 2 stamped steel washers on each end of bedbar (Fig. 48).

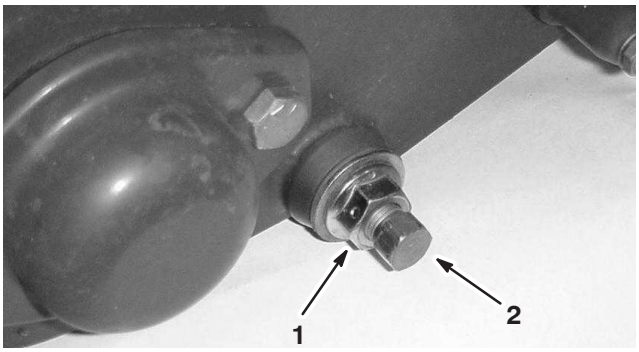

Figure 48

1. Jam nut
2. Bedbar bolt

Assembling the Bedbar

1. Install bedbar, positioning mounting ears between washer and bedbar adjuster.

2. Secure bedbar to each side plate with bedbar bolts (jam nuts on bolts) and 8 washers. A nylon washer is to be positioned on each side of side plate boss. Place a steel washer outside each of the nylon washers. Torque bolts to 240–320 in.-lb. (27 to 36 N·m) Tighten jam nuts until thrust washers just rotate freely.

3. Tighten spring tension nut until spring is collapsed, then back off 1/2 turn.

4. Adjust bedbar; refer to Adjusting the Bedknife to the Reel, page 14.

Backlapping the Reel

1. Remove the plug in the right reel drive cover (Fig. 49).

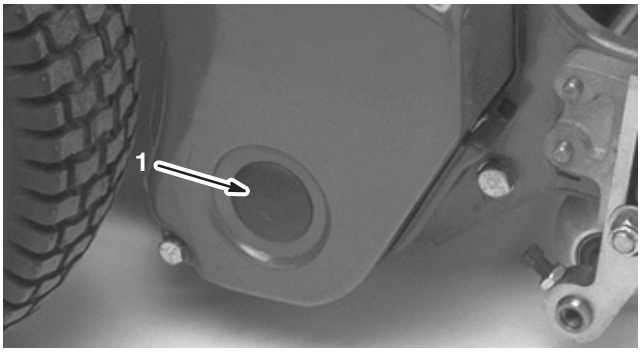

Figure 49

1. Cover plug

2. Insert a 1/2 in. socket extension, connected to the backlapping machine, into the square hole in the center of the reel pulley.

3. Backlap according to the procedure in the *Toro Sharpening Reel and Rotary Mowers Manual*, Form No. 80-300 PT.

Warning

Contact with the reels or other moving parts can result in personal injury.

Keep fingers, hands, and clothing away from the reels or other moving parts.

Danger

Using a short handled brush when backlapping will cause you to come into contact with moving parts, causing serious injury.

Only use brush handle assembly 29-9100 available from your Authorized Toro Distributor when backlapping.

Note: For a better cutting edge, run a file across the front face of the bedknife when the lapping operation is completed. This will remove any burrs or rough edges that may have built up on the cutting edge.

4. Install the plug in the cover when finished.

Evaporative Emission Control Warranty Statement

California Evaporative Emission Control Warranty Statement
Your Warranty Rights and Obligations

Introduction

The California Air Resources Board and The Toro® Company are pleased to explain the evaporative emission control system's warranty on your 2006 model year equipment. In California, new equipment that use small off–road engines must be designed, built, and equipped to meet the State's stringent anti–smog standards. The Toro) Company must warrant the evaporative emission control system on your equipment for two years provided there has been no abuse, neglect or improper maintenance of your equipment.
Your evaporative emission control system may include parts such as: fuel lines, fuel line fittings, and clamps.

Manufacturer's Warranty Coverage:

This evaporative emission control system is warranted for two years. If any evaporative emission–related part on your equipment is defective, the part will be repaired or replaced by The Toro® Company.

Owner's Warranty Responsibilities:

- As the equipment owner, you are responsible for performance of the required maintenance listed in your Operator's Manual. The Toro® Company recommends that you retain all receipts covering maintenance on your equipment, but The Toro® Company cannot deny warranty solely for the lack of receipts.
- As the equipment owner, you should however be aware that The Toro® Company may deny you warranty coverage if your emission warranty parts have failed due to abuse, neglect, or improper maintenance or unapproved modifications.
- You are responsible for presenting your equipment to an Authorized Service Dealer as soon as the problem exists. The warranty repairs should be completed in a reasonable amount of time, not to exceed 30 days. If you have a question regarding your warranty coverage, you should contact The Toro® Company at 1–952–948–4027 or call us toll free at the number listed in your Toro Warranty statement.

Defects Warranty Requirements:

5. The warranty period begins on the date the engine or equipment is delivered to an ultimate purchaser.
6. General Evaporative Emissions Warranty Coverage. The emission warranty parts must be warranted to the ultimate purchaser and any subsequent owner that the evaporative emission control system when installed was
   A. Designed, built, and equipped so as to conform with all applicable regulations; and
   B. Free from defects in materials and workmanship that causes the failure of a warranted part for a period of two years.
7. The warranty on evaporative emissions–related parts will be interpreted as follows:
   A. Any warranted part that is not scheduled for replacement as required maintenance in the written instructions must be warranted for the warranty period of two years. If any such part fails during the period of warranty coverage, it must be repaired or replaced by The Toro® Company. Any such part repaired or replaced under the warranty must be warranted for a time not less than the remaining warranty period.
   B. Any warranted part that is scheduled only for regular inspection in the written instructions must be warranted for the warranty period of two years. A statement in such written instructions to the effect of "repair or replace as necessary" will not reduce the period of warranty coverage. Any such part repaired or replaced under warranty must be warranted for a time not less than the remaining warranty period.
   C. Any warranted part that is scheduled for replacement as required maintenance in the written instructions must be warranted for the period of time prior to the first scheduled replacement point for that part. If the part fails prior to the first scheduled replacement, the part must be repaired or replaced by The Toro® Company. Any such part repaired or replaced under warranty must be warranted for a time not less than the remainder of the period prior to the first scheduled replacement point for the part.
   D. Repair or replacement of any warranted part under the warranty provisions of this article must be performed at no charge to the owner at an Authorized Service Dealer.
   E. Notwithstanding the provisions of subsection (D) above, warranty services or repairs must be provided at an Authorized Service Dealer.
   F. The owner must not be charged for diagnostic labor that leads to the determination that a warranted part is in fact defective, provided that such diagnostic work is performed at an Authorized Service Dealer.
   G. Throughout the evaporative emission control system's two year warranty period, The Toro® Company must maintain a supply of warranted parts sufficient to meet the expected demand for such parts.
   H. Manufacturer approved replacement parts must be used in the performance of any warranty maintenance or repairs and must be provided without charge to the owner. Such use will not reduce the warranty obligations of The Toro® Company.
   I. The use of any add–on or modified parts will be grounds for disallowing a warranty claim made in accordance with this article. The Toro® Company will not be liable under this Article to warrant failures of warranted parts caused by the use of an add–on or modified part.
   J. The Toro® Company shall provide any documents that describe the warranty procedures or policies within five working days of request by the Air Resources Board.

Emission Warranty Parts List:

The following list includes the parts covered under this warranty:

- Fuel Lines
- Fuel Line Fittings
- Clamps

The Toro General Commercial Products Warranty

A Two-Year Limited Warranty

Conditions and Products Covered

The Toro Company and its affiliate, Toro Warranty Company, pursuant to an agreement between them, jointly warrant your Toro Commercial Product ("Product") to be free from defects in materials or workmanship for two years or 1500 operational hours*, whichever occurs first. Where a warrantable condition exists, we will repair the Product at no cost to you including diagnosis, labor, parts, and transportation. This warranty begins on the date the Product is delivered to the original retail purchaser.

* Product equipped with hour meter

Instructions for Obtaining Warranty Service

You are responsible for notifying the Commercial Products Distributor or Authorized Commercial Products Dealer from whom you purchased the Product as soon as you believe a warrantable condition exists.

If you need help locating a Commercial Products Distributor or Authorized Dealer, or if you have questions regarding your warranty rights or responsibilities, you may contact us at:

Toro Commercial Products Service Department
Toro Warranty Company
8111 Lyndale Avenue South
Bloomington, MN 55420-1196
952-888-8801 or 800-982-2740
E-mail: commercial.service@toro.com

Owner Responsibilities

As the Product owner, you are responsible for required maintenance and adjustments stated in your operator's manual. Failure to perform required maintenance and adjustments can be grounds for disallowing a warranty claim.

Items and Conditions Not Covered

Not all product failures or malfunctions that occur during the warranty period are defects in materials or workmanship. This express warranty does not cover the following:

- Product failures which result from the use of non-Toro replacement parts, or from installation and use of add-on, modified, or unapproved accessories
- Product failures which result from failure to perform required maintenance and/or adjustments
- Product failures which result from operating the Product in an abusive, negligent or reckless manner
- Parts subject to consumption through use unless found to be defective. Examples of parts which are consumed, or used up, during normal Product operation include, but are not limited to, blades, reels, bedknives, tines, spark plugs, castor wheels, tires, filters, belts, and certain sprayer components such as diaphragms, nozzles, and check valves, etc.
- Failures caused by outside influence. Items considered to be outside influence include, but are not limited to, weather, storage practices, contamination, use of unapproved coolants, lubricants, additives, or chemicals, etc.
- Normal "wear and tear" items. Normal "wear and tear" includes, but is not limited to, damage to seats due to wear or abrasion, worn painted surfaces, scratched decals or windows, etc.

Parts

Parts scheduled for replacement as required maintenance are warranted for the period of time up to the scheduled replacement time for that part.

Parts replaced under this warranty become the property of Toro. Toro will make the final decision whether to repair any existing part or assembly or replace it. Toro may use factory remanufactured parts rather than new parts for some warranty repairs.

General Conditions

Repair by an Authorized Toro Distributor or Dealer is your sole remedy under this warranty.

Neither The Toro Company nor Toro Warranty Company is liable for indirect, incidental or consequential damages in connection with the use of the Toro Products covered by this warranty, including any cost or expense of providing substitute equipment or service during reasonable periods of malfunction or non-use pending completion of repairs under this warranty. Except for the Emissions warranty referenced below, if applicable, there is no other express warranty. All implied warranties of merchantability and fitness for use are limited to the duration of this express warranty.

Some states do not allow exclusions of incidental or consequential damages, or limitations on how long an implied warranty lasts, so the above exclusions and limitations may not apply to you.

This warranty gives you specific legal rights, and you may also have other rights which vary from state to state.

Note regarding engine warranty: The Emissions Control System on your Product may be covered by a separate warranty meeting requirements established by the U.S. Environmental Protection Agency (EPA) and/or the California Air Resources Board (CARB). The hour limitations set forth above do not apply to the Emissions Control System Warranty. Refer to the Engine Emission Control Warranty Statement printed in your operator's manual or contained in the engine manufacturer's documentation for details.

Countries Other than the United States or Canada

Customers who have purchased Toro products exported from the United States or Canada should contact their Toro Distributor (Dealer) to obtain guarantee policies for your country, province, or state. If for any reason you are dissatisfied with your Distributor's service or have difficulty obtaining guarantee information, contact the Toro importer. If all other remedies fail, you may contact us at Toro Warranty Company.

Part No. 374-0031 Rev. C