Form Number 3357-415 Rev A

53cm Heavy-Duty Recycler®
Rear Bagging Lawn Mower

Model No. 22176TE - 270000001 and up.

Parts Catalog

Ordering Replacement Parts

To order replacement parts, please supply the part number, the quantity, and the description of each part desired.

Understanding Reference Numbers

Each Identified part in an illustration has a reference number. The reference number for a part also appears in the parts list, along with other information about the part.

This catalog uses two special reference number formats, one to indicate parts in a service assembly and another to indicate the quantity of a given part in an illustration.

Service Assembly Reference Numbers

Parts in service assemblies have reference numbers in the form a:b. The a represents the reference number of the entire service assembly and the b represents a sequential number unique to each part within the service assembly.

For example, a wheel assembly might be identified by reference number 6, the tire by 6:1, the valve by 6:2, and the wheel by 6:3. When you order the assembly identified by reference number 6, you receive all parts identified by reference numbers 6:1, 6:2, and 6:3. However, you may also order any part individually. Reference numbers of this type appear in illustrations and in part lists.

Reference Numbers Indicating Quantity

In an illustration, if a reference number indicates more than one part, the reference number has the form nX y. The n represents the quantity of the part, the X is the multiplication symbol, and the y represents the reference number.

For example, in an illustration, the reference number 2X 37 means that two of the parts identified by reference number 37 are indicated.

© The Toro Company - 2006
All Rights Reserved

Register your product at www.Toro.com

Contents

Description	Page
Housing, Chute and Wheel Assembly	3
Housing Assembly No. 98-7142	4
Front Wheel and Tire Assembly No. 100-2870	5
Gear Case Assembly No. 74-1861	6
Engine, Fuel Tank and Blade Assembly	7
Handle Assembly	8
Rear Drive and Wheel Assembly	9
Rear Wheel Assembly No. 100-2860	10
Grass Bag Assembly No. 106-0975	11
Cylinder and Crankcase Assembly	12
Piston and Crankshaft Assembly	13
Valve and Camshaft Assembly	14
Lubrication Equipment Assembly	15
Cooling Equipment Assembly	16
Electrical Equipment Assembly	17
Control Equipment Assembly	18
Carburetor Assembly	19
Air Filter and Muffler Assembly	20
Starter Assembly	21
Brake and Lever Assembly	22

Part Description Abbreviations

Part descriptions in this catalog may include the following abbreviations.

AR	as required
ASM	assembly
BBC	blade brake clutch
CARR	carriage
DEG	degrees
EXT	external
FH	flat head
GA	gauge
HD	heavy-duty
HF	hex flange
HH	hex head
HHF	hex head flange
HHFTF	hex head flange thread forming
HJ	hex jam
HLH	hex lag head
HOC	height-of-cut
HSBH	hex socket button head
HSFH	hex socket flat head
HSH	hex socket head
HWH	hex washer head
HWHTF	hex washer head thread forming
HYD	hydraulic
LH	left hand
NI	nylon insert
NPTF	national pipe thread fine
PFH	phillips flat head
PPH	phillips pan head
PPHTF	phillips pan head thread forming
PRH	phillips round head
PTH	phillips truss head
PTO	power-take-off
RH	right hand
ROPS	roll-over protection system
SFH	slotted fillister head
SHH	slotted hex head
SHWH	slotted hex washer head
SPH	slotted pan head
SQH	square head
SRH	slotted round head
STD	standard
TAP	self tapping
TTH	torx truss head

Footnotes

❶ Not illustrated

❷ Not serviced separately

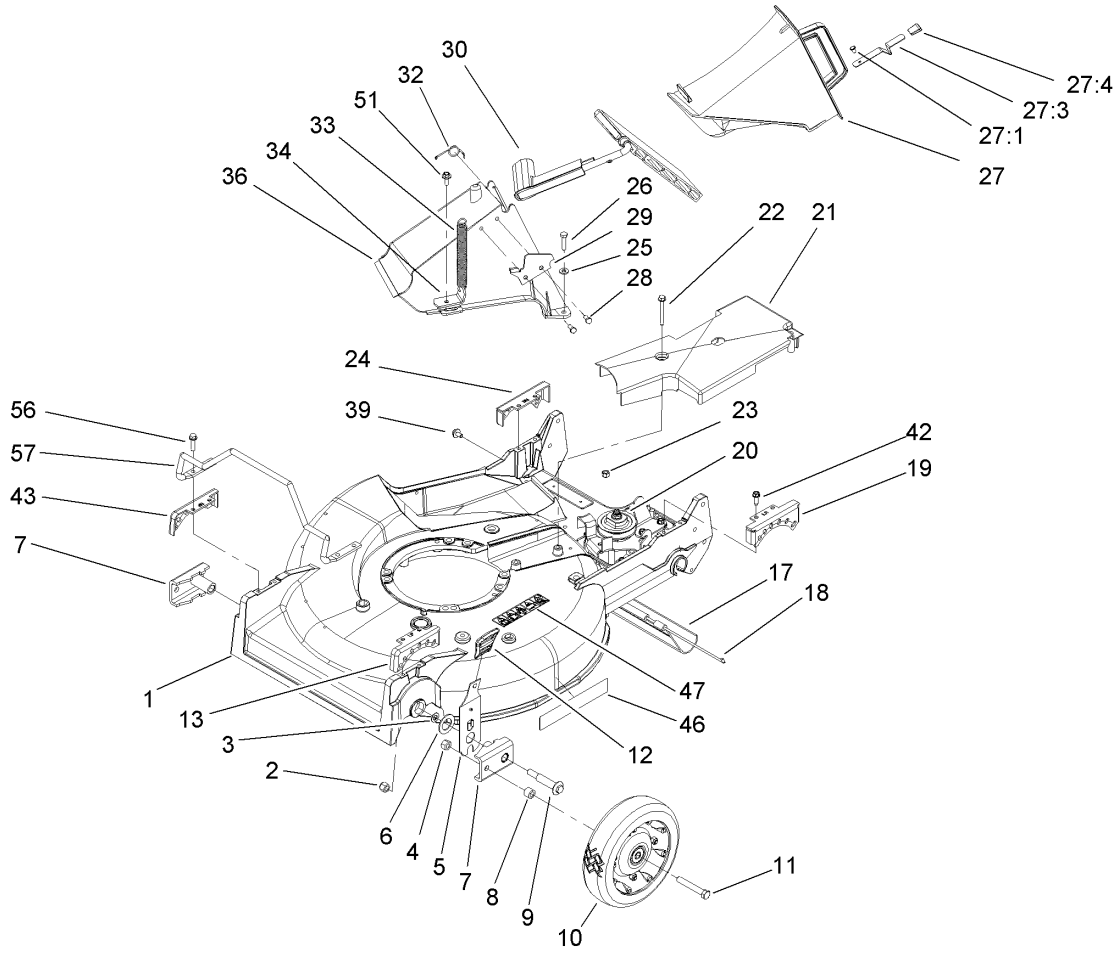

Housing, Chute and Wheel Assembly

Ref	Part No.	Qty.	Description
1	98-7142	1	Housing
2	3296-6	2	Nut-Lock
3	40-1940	2	Washer
4	32152-2	2	Nut-Lock, Cone
5	110-0537	2	Spring Arm ASM
6	257-3	2	Washer-Thrust
7	61-8300	2	Arm-Pivot, Front
8	52-2480	2	Spacer-Wheel
9	27-6232	2	Bolt-Wheel
10	100-2870	2	Wheel And Tire ASM
11	323-12	2	Screw-HH
12	110-0549	2	Knob-HOC
13	49-8760	1	Quadrant-Front, LH
17	112-9989	1	Shield- Trailing
18	33-3208	1	Rod-Shield
19	49-8740	1	Quadrant-Rear, LH
20	74-1861	1	Gear Case ASM
21	74-1770	1	Cover-Belt
22	37-7260	2	Screw-HH
23	3296-42	2	Nut-Lock, NI
24	49-8750	1	Quadrant-Rear, RH
25	3256-22	2	Washer-Flat
26	321-8	2	Screw-HH
27	77-0502	1	Discharge Plug ASM

Ref	Part No.	Qty.	Description
27:1	3295-35	1	Rivet-Head, Flat
27:3	76-4640	1	Latch-Plug, Discharge
27:4	76-4650	1	Grip-Latch
28	46-8090	2	Screw-Plastite
29	93-3154	1	Latch-Plate
30	93-7351	1	Discharge Door ASM
32	80-3770	1	Retainer-Door
33	76-4660	1	Spring-Door
34	71-9350	1	Bracket-Spring
36	82-9151	1	Tunnel-Discharge
39	46-6810	1	Screw And Washer ASM
42	49-2040	4	Screw-HWHTF
43	49-8770	1	Quadrant-Front, RH
46	106-0689	1	Decal
47	110-4978	2	Decal-Danger
51	46-6811	1	Screw-HWH
56	32144-86	4	Screw-HWHTF
57	99-6722	1	Guard-Engine

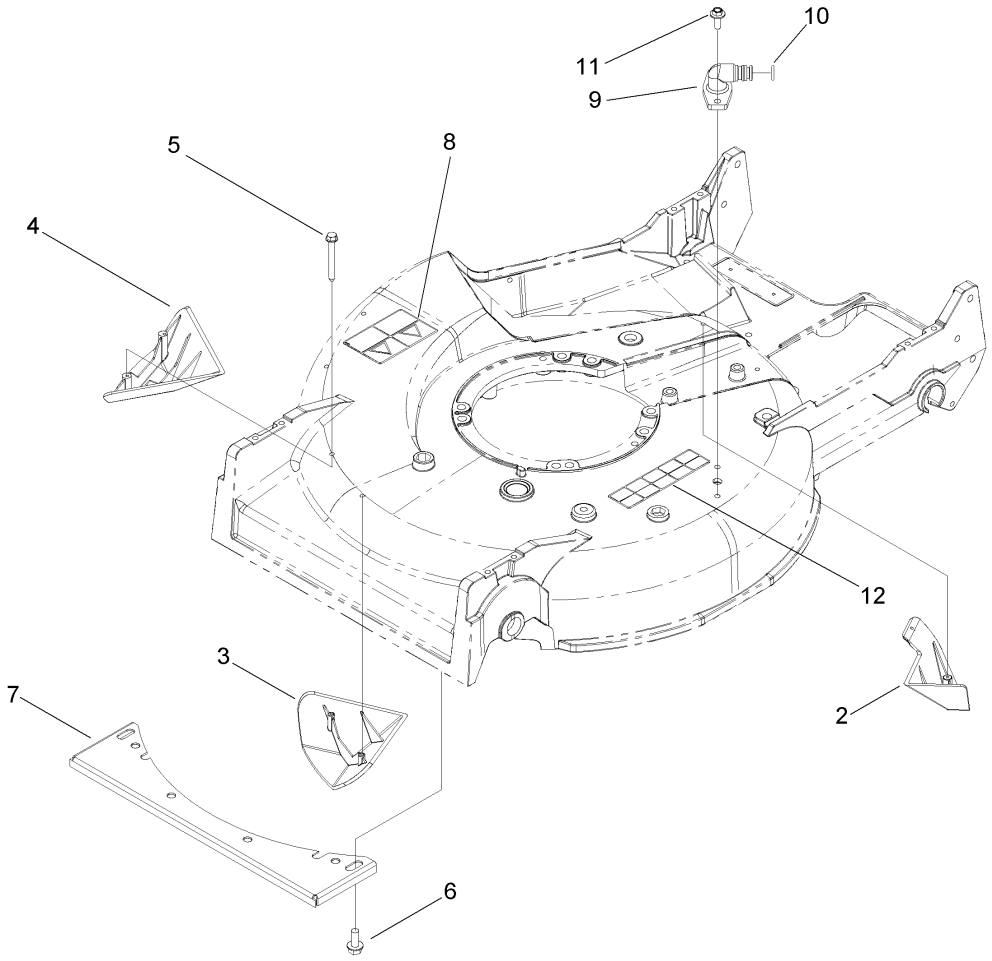

Housing Assembly No. 98-7142

Ref	Part No.	Qty.	Description
2	92-1750	1	Kicker-Rear
3	92-1720	1	Kicker-Front
4	92-1730	1	Kicker-RH
5	32144-111	6	Screw-PPH
6	32144-70	4	Screw-HWHTF
7	46-5400-03	1	Shield
8	93-6654	1	Decal-Danger
9	95-2747	1	Fitting-Washout
10	46-6290	1	O-Ring
11	46-6811	2	Screw-HWH
12	93-6657	1	Decal-Danger

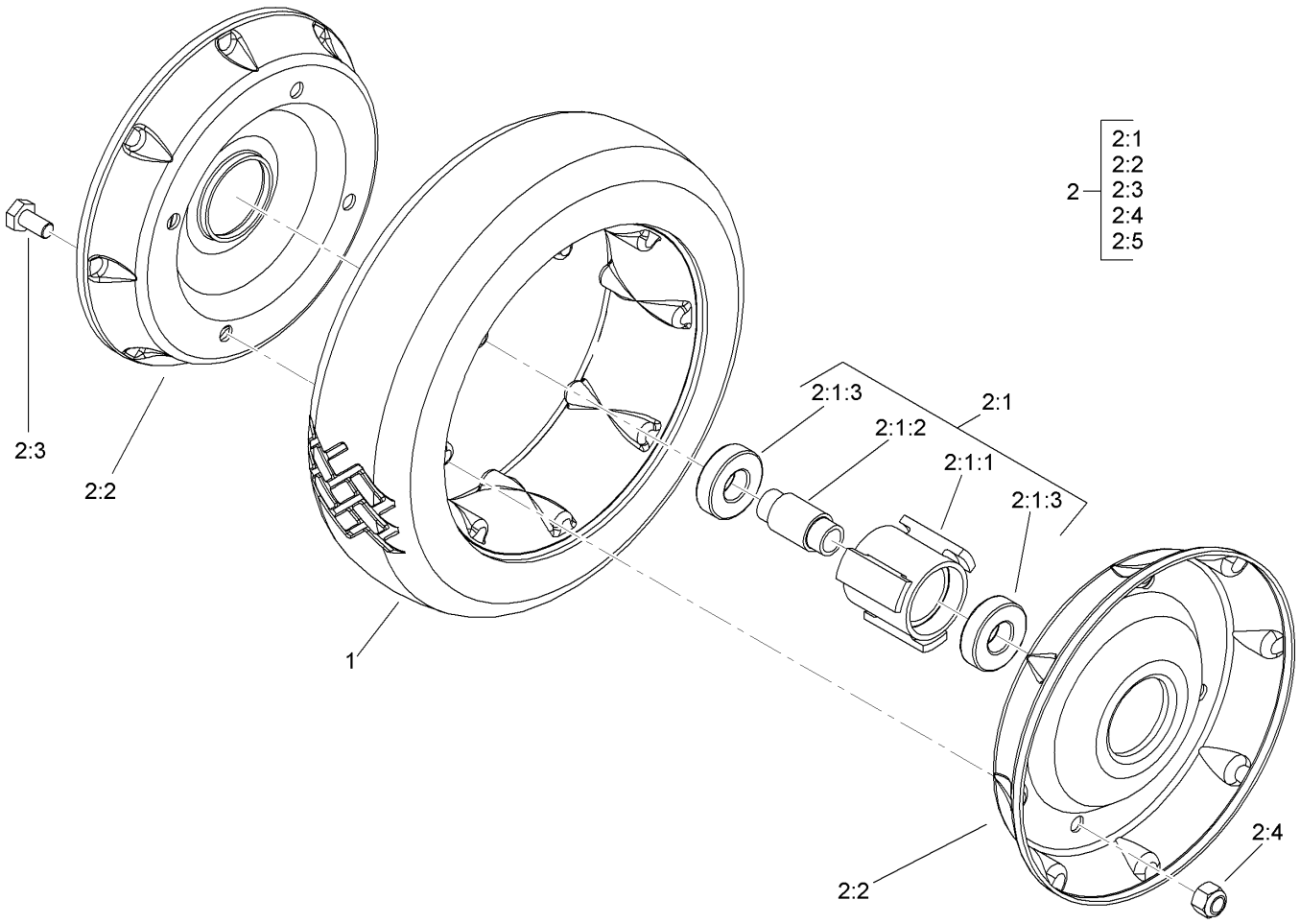

Front Wheel and Tire Assembly No. 100-2870

Ref	Part No.	Qty.	Description
1	53-7740	1	Tire
❷2		1	Wheel ASM
❷2:1		1	Hub And Bearing ASM
2:1:1	52-2410	1	Hub-Bearing
2:1:2	52-2440	1	Spacer-Bearing
2:1:3	52-2450	2	Bearing-Wheel
2:2	53-7780-06	2	Plate-Wheel, Half
2:3	321-2	4	Screw-HH
2:4	3296-42	4	Nut-Lock, NI

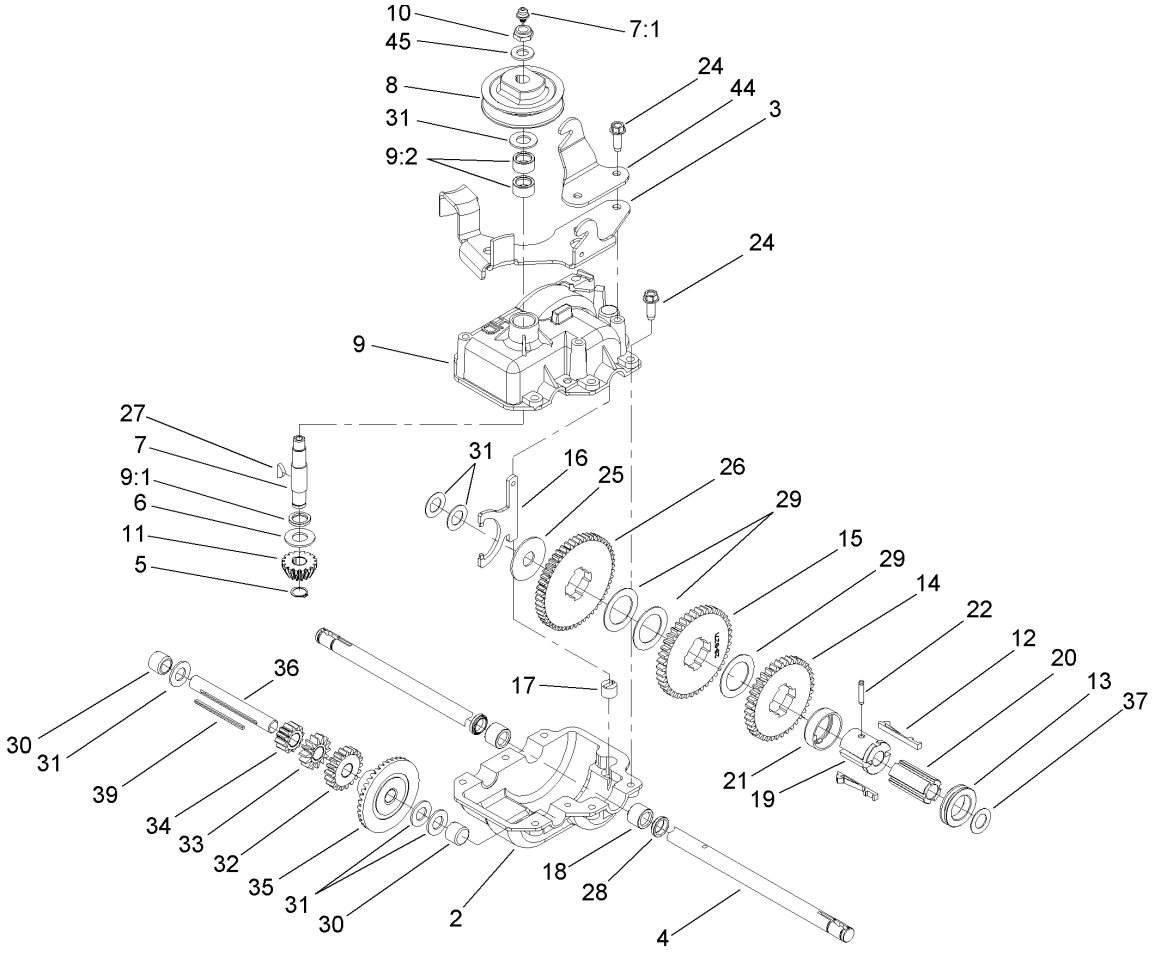

Gear Case Assembly No. 74-1861

Ref	Part No.	Qty.	Description
2	74-1920	1	Case-Gear, Lower
3	49-8461-03	1	Bracket-Guide, Belt
4	74-1890	1	Shaft-Output
5	32151-57	1	Ring-Retaining
6	47-2910	1	Washer-Thrust
7	13-5149	1	Input Shaft ASM
7:1	302-63	1	Zerk
8	39-6740	1	Pulley
9	13-9739	1	Upper Gearcase ASM
9:1	47-7260	1	Seal
9:2	47-7270	2	Bearing
10	3296-5	1	Nut-Lock
11	39-6660	1	Pinion-Bevel
12	29-9330	2	Key-Shift
13	29-9340	1	Collar-Shift
14	42-4740	1	Gear-38T
15	29-9271	1	Gear-42T
16	60-8870	1	Yoke-Shift
17	29-9570	1	Bushing-Yoke
18	47-6730	2	Seal-Oil
19	55-8010	1	Sleeve-Gear
20	39-6720	1	Sleeve
21	55-8020	1	Retainer-Key
22	3285-19	1	Pin-Groove

Ref	Part No.	Qty.	Description
24	49-2040	6	Screw-HWHTF
25	29-9690	1	Washer
26	46-3560	1	Gear
27	3257-1	2	Key-Woodruff
28	48-2060	2	Bearing-Roller
29	36-4770	3	Washer
30	252-103	2	Bearing-Closed
31	36-4792	4	Washer-Thrust
32	39-6650	1	Gear-18T
33	46-3550	1	Gear-14T
34	46-3540	1	Gear-12T
35	74-1760	1	Gear-Bevel
36	53-7950	1	Shaft-Intermediate
37	36-4780	3	Washer
39	39-7842	1	Key
44	74-1750-03	1	Bracket-Engage, Traction
45	3256-45	1	Washer-Flat

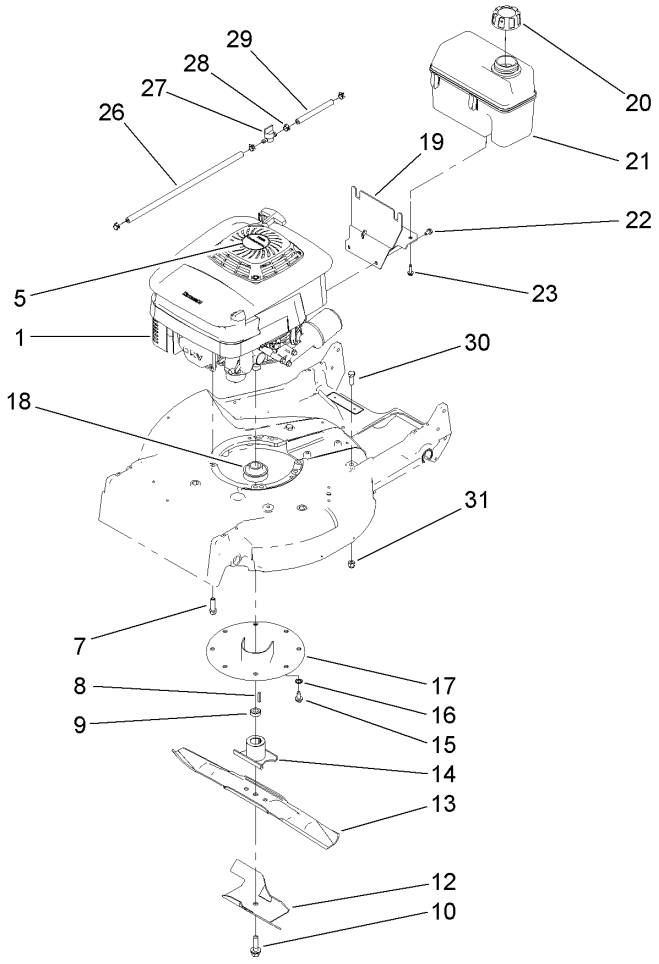

Engine, Fuel Tank and Blade Assembly

Ref	Part No.	Qty.	Description
1	106-0844	1	Engine ASM
5	112-9967	1	Decal
7	95-1727	4	Screw-Taptite
8	5-1077	1	Key-Square
9	103-3795	1	Spacer-Retainer, Blade
10	105-8579	1	Bolt-Blade
12	92-1599-03	1	Stiffener-Blade
13	91-2256-03	1	Blade-21 Inch
14	52-2170	1	Retainer-Blade
15	32144-70	3	Screw-HWHTF
16	3254-6	3	Washer-Lock, Internal
17	65-5860	1	Protector-Crankshaft
18	46-7910	1	Pulley-Driver
19	110-4950-03	1	Tank Mount ASM
20	93-7198	1	Gas Cap ASM
21	106-0625	1	Tank-Fuel
22	104-2628	3	Screw-HWH
23	46-8091	2	Screw-HWH
26	109-0296	1	Hose-Fuel
27	1-603770	1	Valve-Fuel
28	2412-98	4	Clamp
29	109-0650	1	Hose-Fuel
30	323-6	2	Screw-HH
31	3296-39	2	Nut-Lock, NI

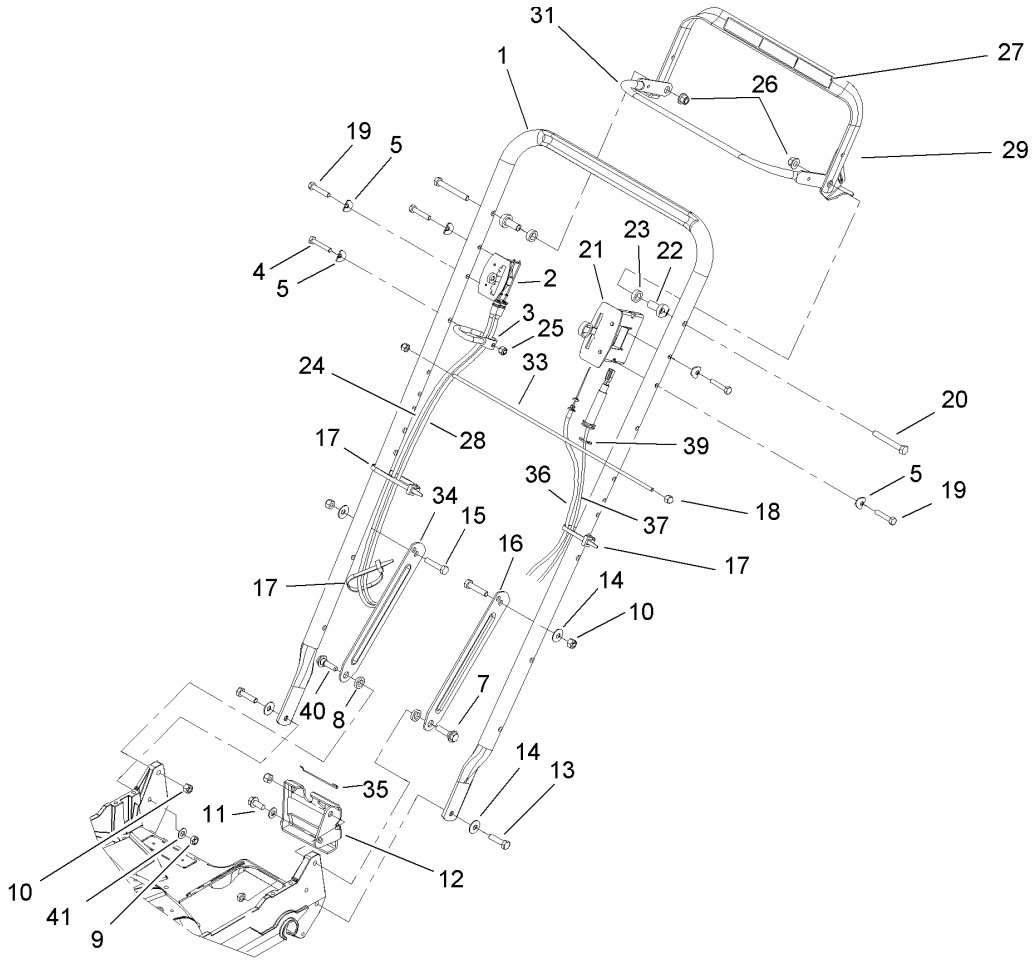

Handle Assembly

Ref	Part No.	Qty.	Description
1	99-2545-03	1	Handle-Proline
2	110-5026	1	Control-Shift
3	46-8081	1	Guide-Rope
4	321-9	1	Screw-HH
5	3-7501	5	Washer
7	27-7210	1	Screw-Shoulder
8	3-3287	2	Spacer-Latch, Handle
9	3296-47	2	Nut-Lock, NI
10	3296-29	4	Nut-Lock, NI
11	32144-70	1	Screw-HWHTF
12	74-1741	1	Bracket-Adjustment, Traction
13	322-6	2	Screw-HH
14	3290-456	4	Washer-Belleville
15	322-7	2	Screw-HH
16	100-3298-03	1	Latch-Handle, LH
17	3290-378	3	Tie-Cable
18	32111-7	2	Nut-Cap
19	321-13	4	Screw-HH
20	322-12	2	Screw-HH
21	108-2645	1	Control-Head, Throttle
22	49-1631	2	Spacer-Support
23	256-276	2	Spacer-Nylon
24	107-4081	1	Cable-Brake
25	3296-42	1	Nut-Lock, NI

Ref	Part No.	Qty.	Description
26	3296-58	2	Nut-Lock, NI
27	94-6046	1	Decal-Operation
28	99-2543	1	Cable-Shift
29	94-4371-03	1	Traction Bail ASM
31	94-4370-03	1	Brake Bail ASM
33	48-2810	1	Rod-Support, Bag
34	100-3297-03	1	Latch-Handle, RH
35	46-7030	1	Retainer-Cable
36	74-1791	1	Cable-Traction
37	106-0888	1	Throttle Cable ASM
39	32151-86	4	E-Ring
40	27-7211	1	Screw-Shoulder
41	3256-23	2	Washer-Flat

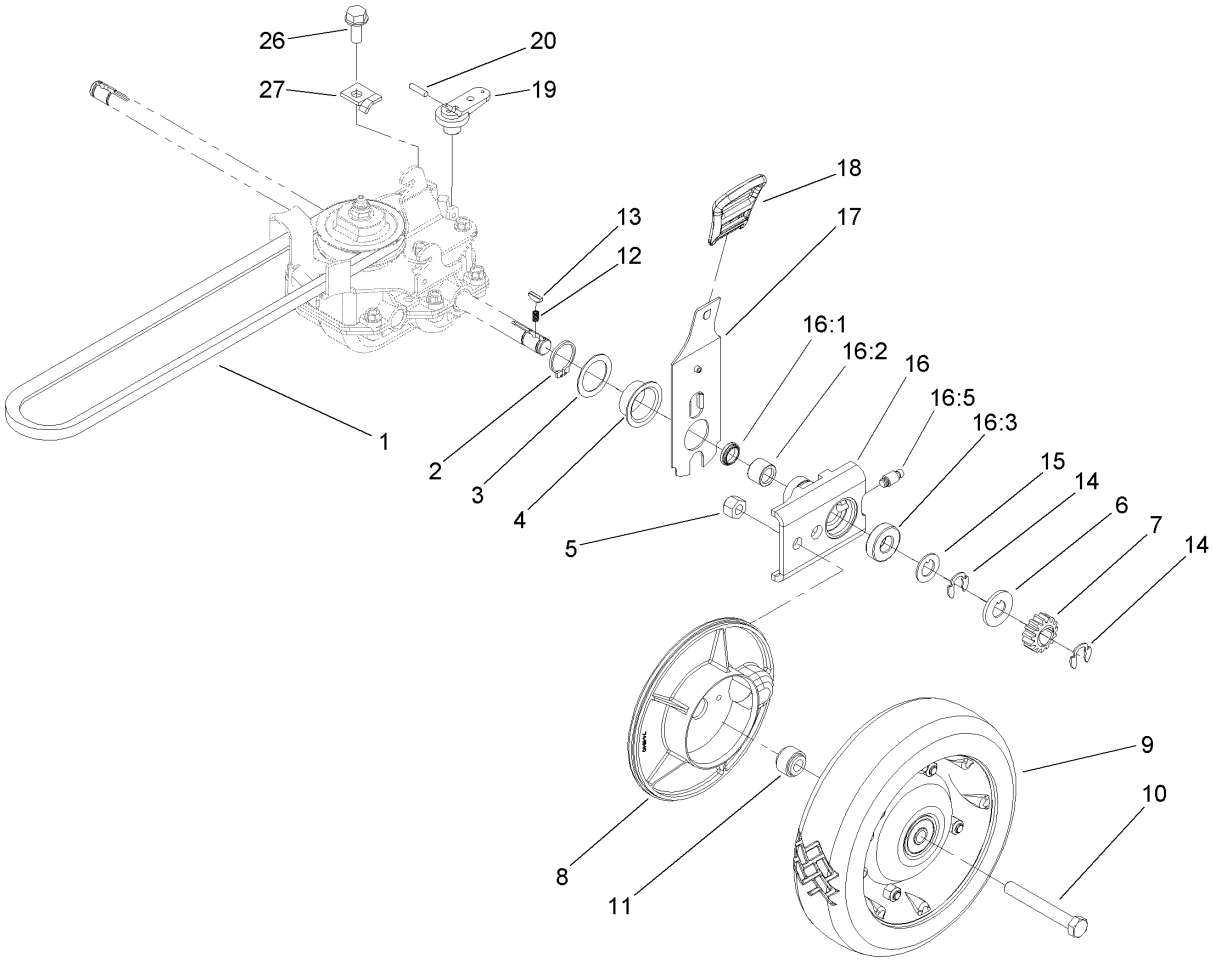

Rear Drive and Wheel Assembly

Ref	Part No.	Qty.	Description
1	36-8070	1	V-Belt
2	32151-36	2	Ring-Retaining
3	74-1810	2	Washer
4	48-2170	2	Cap-End
5	32152-2	2	Nut-Lock, Cone
6	62-3830	2	Washer-Thrust, Outer
7	39-9160	2	Gear-Pinion
8	74-1640	2	Cover-Wheel
9	100-2860	2	Wheel And Tire ASM
10	323-13	2	Screw-HH
11	74-1650	2	Spacer-Cover, Wheel
12	39-9650	2	Spring-Compression
13	612066	2	Key
14	32151-68	4	Ring-Retaining
15	49-7700	2	Washer-Thrust, Outer
16	74-1851	2	Pivot Arm ASM
16:1	47-6730	1	Seal-Oil
16:2	48-2060	1	Bearing-Roller
16:3	52-2450	1	Bearing-Wheel
16:5	92-6316	1	Zerk
17	110-0538	2	Rear Spring Arm ASM
18	110-0549	2	Knob-HOC
19	29-9560	1	Lever-Shift
20	32121-99	1	Pin-Coil

Ref	Part No.	Qty.	Description
26	32144-70	1	Screw-HWHTF
27	62-3720	1	Clamp-Cable
❶99	106-0975	1	Grass Bag ASM

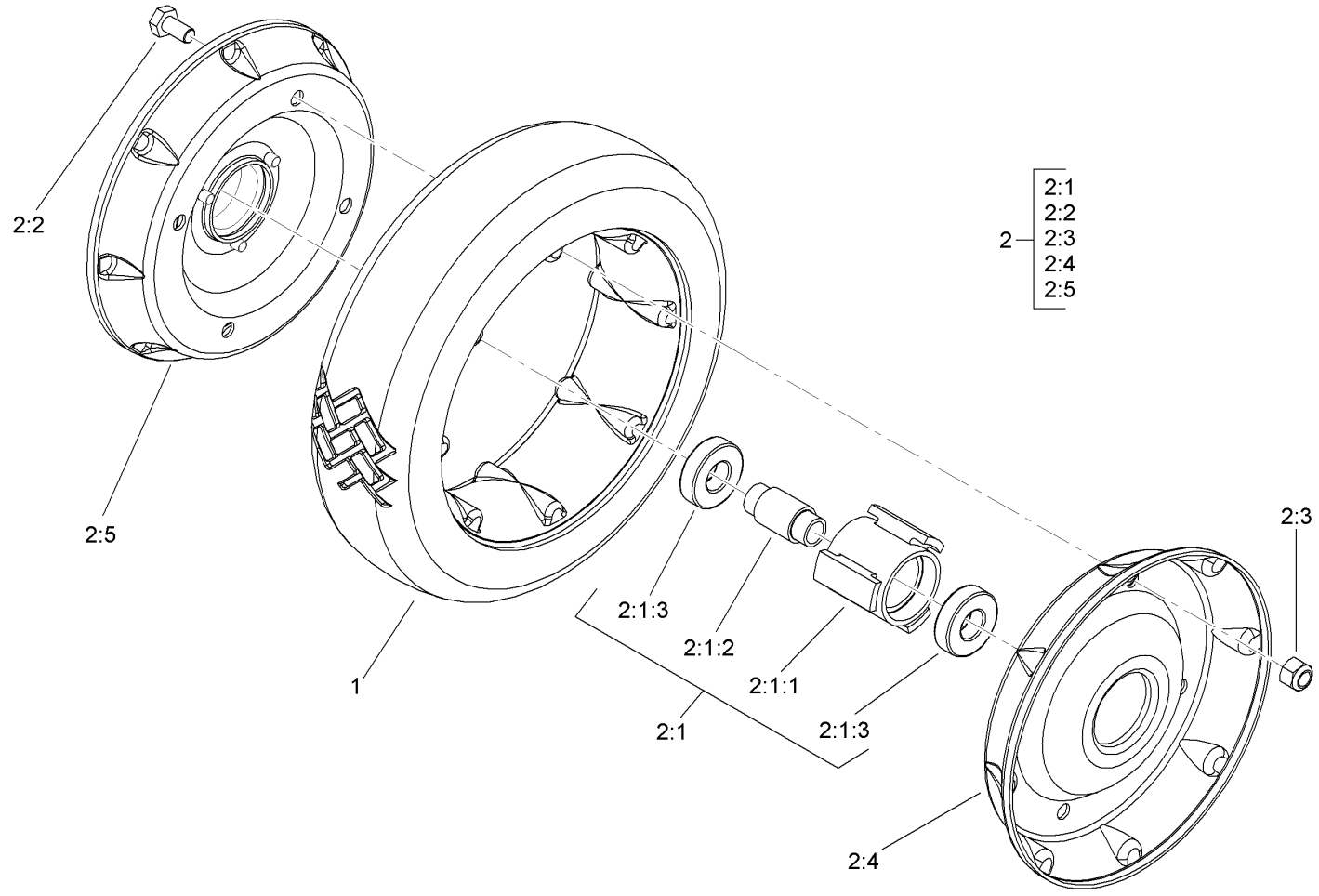

Rear Wheel Assembly No. 100-2860

Ref	Part No.	Qty.	Description
1	53-7740	1	Tire
❷2		1	Wheel ASM
❷2:1		1	Hub And Bearing ASM
2:1:1	52-2410	1	Hub-Bearing
2:1:2	52-2440	1	Spacer-Bearing
2:1:3	52-2450	2	Bearing-Wheel
2:2	321-2	4	Screw-HH
2:3	3296-42	4	Nut-Lock, NI
2:4	53-7780-06	1	Plate-Wheel, Half
2:5	92-4957-06	1	Wheel Half And Gear ASM

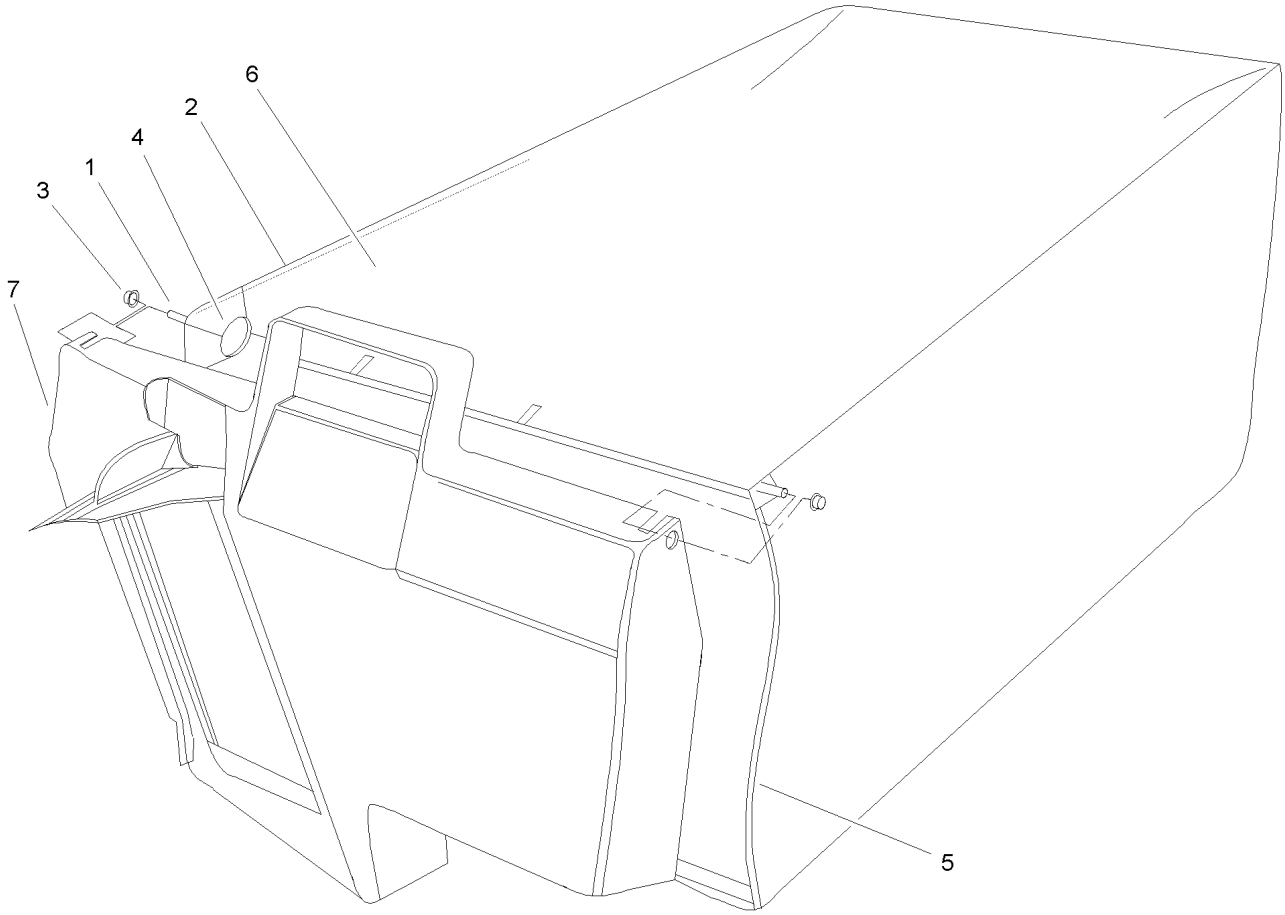

Grass Bag Assembly No. 106-0975

Ref	Part No.	Qty.	Description
1	33-4820	1	Hinge-Door, Bag
2	42-4030	1	Frame-Bag, Upper
3	3290-422	2	Nut-Push
4	36-6910	2	Spring
5	42-4020	1	Frame-Bag
6	106-0926	1	Bag-Grass
7	48-2840	1	Door-Bag, Grass

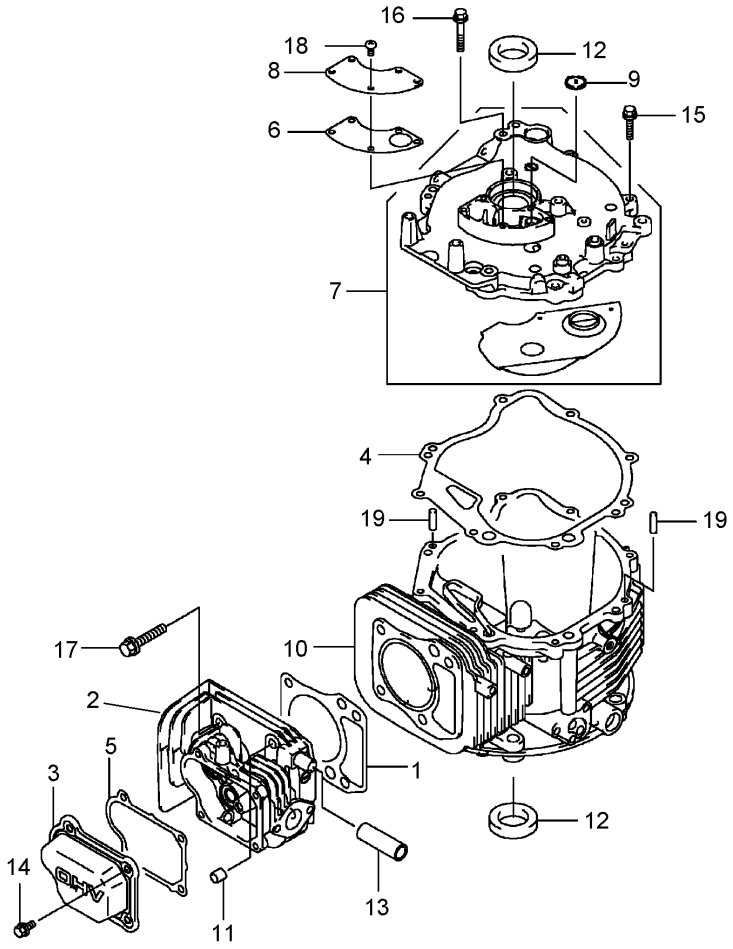

Cylinder and Crankcase Assembly

Ref	Part No.	Qty.	Description
1	108-2627	1	Gasket-Head
2	108-2501	1	Head-Cylinder
3	108-2502	1	Case-Rocker
4	108-2503	1	Gasket
5	108-2504	1	Gasket-Case, Rocker
6	108-2505	1	Gasket-Breather
7	108-2506	1	Cover-Complete
8	108-2507	1	Cover-Breather
9	108-2508	1	Valve-Breather
10	108-2509	1	Crankcase-Complete
11	108-2510	2	Pin
12	108-2511	2	Seal-Oil
13	108-2512	1	Tube
14	100-2804	4	Bolt-Flanged
15	100-2610	7	Bolt-Flanged
16	108-2513	1	Bolt-Flange
17	108-2514	4	Bolt-Flange
18	100-2763	5	Screw-Pan
19	108-2515	2	Pin-Dowel

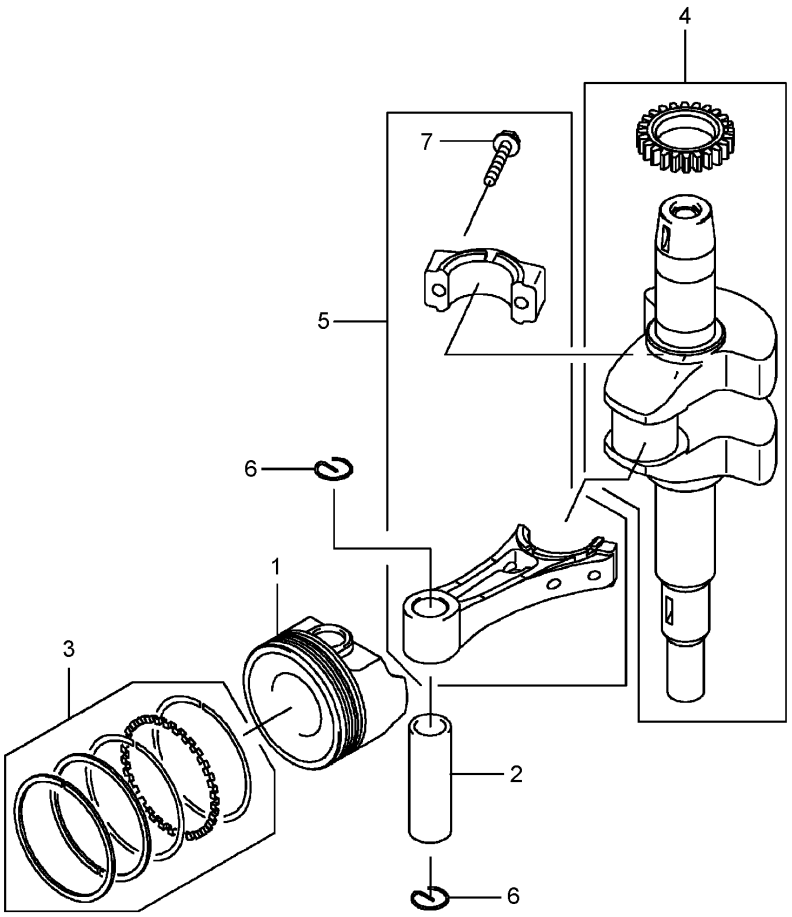

Piston and Crankshaft Assembly

Ref	Part No.	Qty.	Description
1	108-2516	1	Piston-Engine
2	108-2517	1	Pin-Piston
3	108-2518	1	Ring-Set, Piston
4	108-2519	1	Crankshaft
5	108-2520	1	Connecting Rod ASM
6	108-2521	2	Ring-Snap
7	108-2522	2	Bolt-Flange

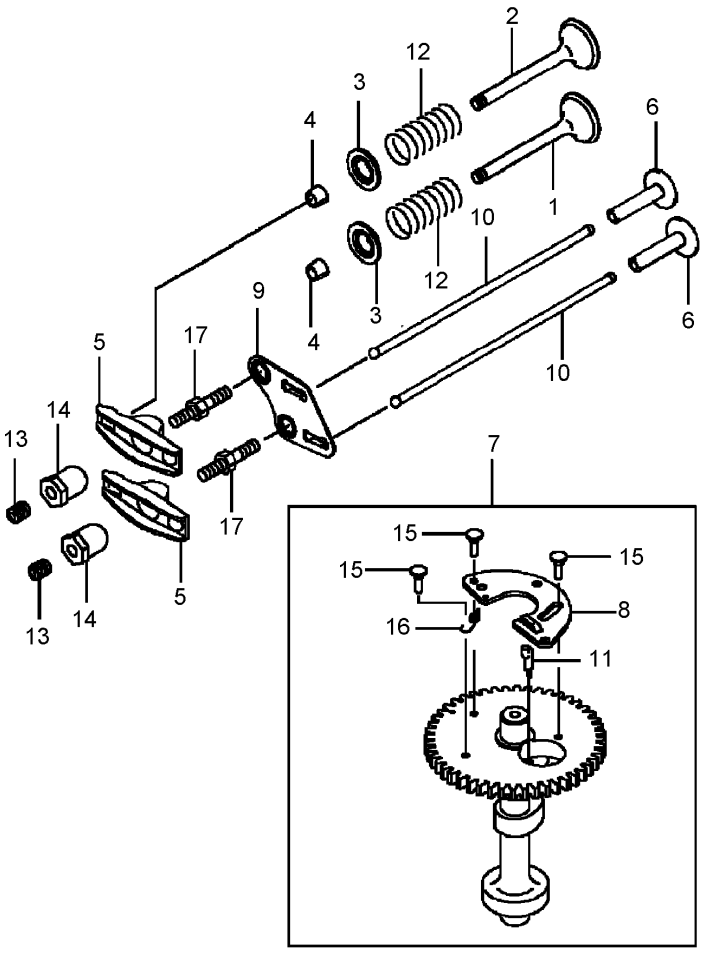

Valve and Camshaft Assembly

Ref	Part No.	Qty.	Description
1	108-2523	1	Valve-Intake
2	108-2524	1	Valve-Exhaust
3	108-2525	2	Retainer-Spring, Valve
4	95-9744	4	Collet
5	108-2526	2	Arm-Rocker
6	108-2527	2	Tappet
7	108-2528	1	Camshaft Valve ASM
8	108-2529	1	Weight
9	108-2530	1	Guide
10	108-2531	2	Rod-Push
11	108-2532	1	Arm
12	108-2533	2	Spring-Valve, Engine
13	108-2534	2	Screw
14	93-8534	2	Nut
15	108-2535	3	Pin
16	108-2536	1	Spring
17	108-2537	2	Bolt

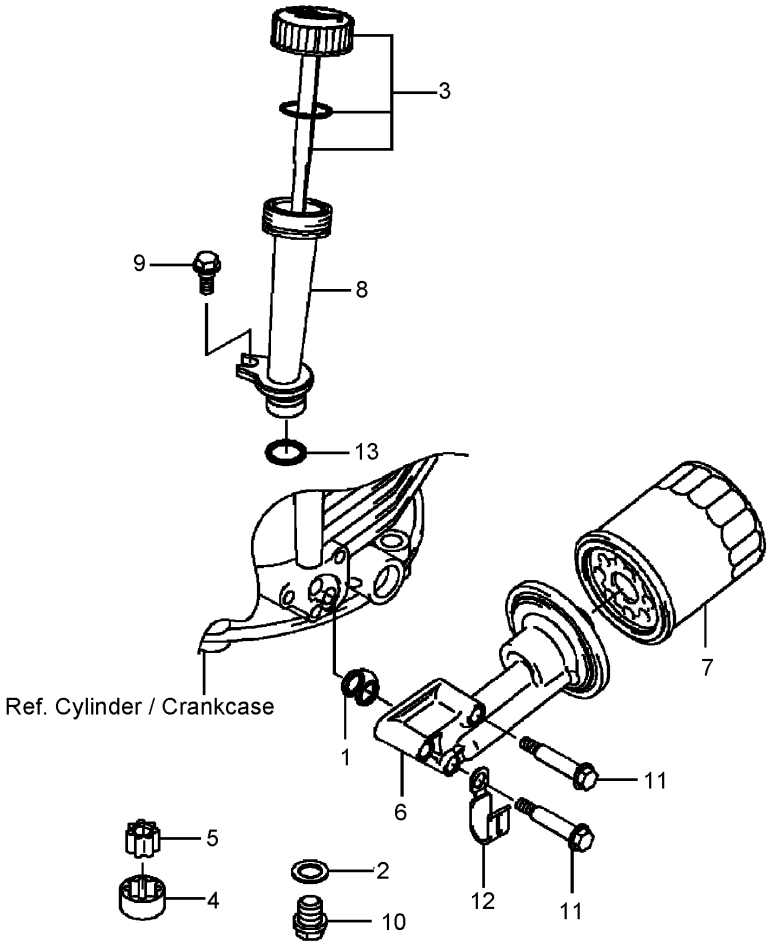

Lubrication Equipment Assembly

Ref	Part No.	Qty.	Description
1	100-2644	1	Gasket
2	108-2538	1	Gasket
3	108-2539	1	Cap ASM
4	108-2540	1	Rotor-Pump
5	108-2541	1	Rotor-Pump
6	108-2542	1	Pipe
7	KW10761	1	Filter-Oil
8	108-2543	1	Filler
9	108-2544	1	Bolt
10	108-2545	1	Bolt
11	108-2546	3	Bolt
12	108-2547	1	Clamp
13	100-2690	1	O-Ring

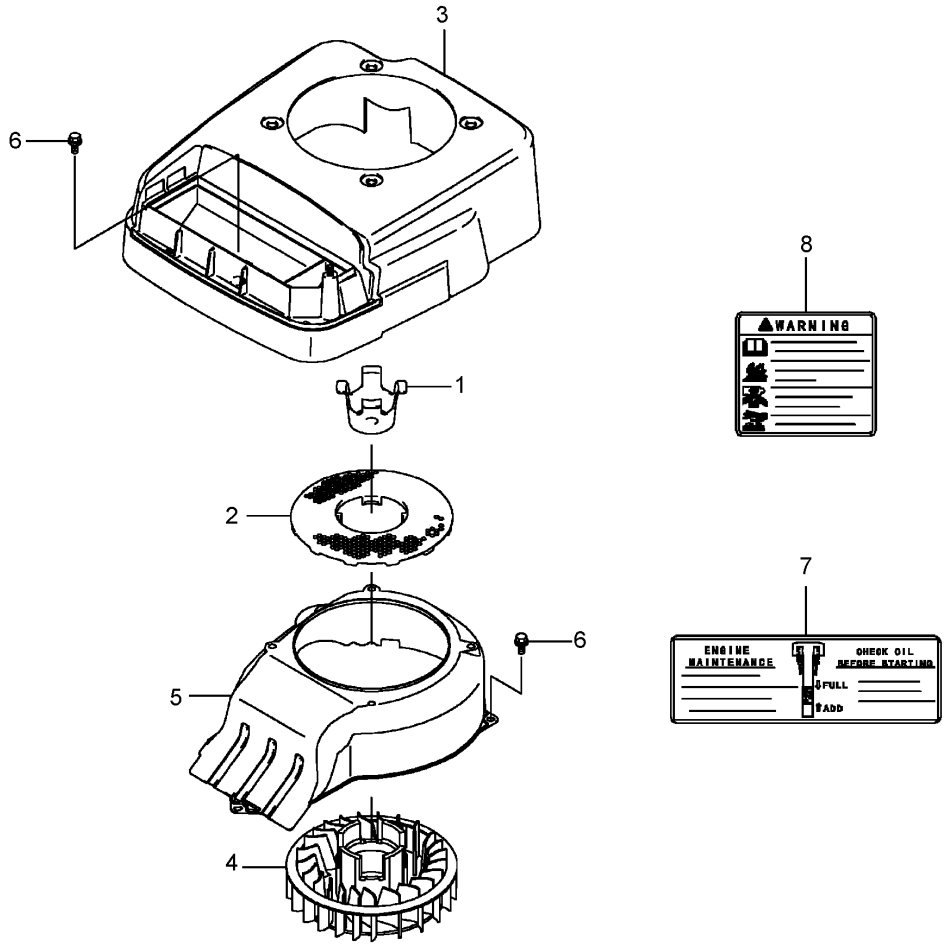

Cooling Equipment Assembly

Ref	Part No.	Qty.	Description
1	108-2548	1	Bracket-Fan
2	108-2549	1	Screen
3	108-2550	1	Cover
4	108-2551	1	Fan
5	108-2552	1	Housing-Fan
6	100-2804	2	Bolt-Flanged
7	108-2624	1	Label-Manual
8	108-2625	1	Label-Warning

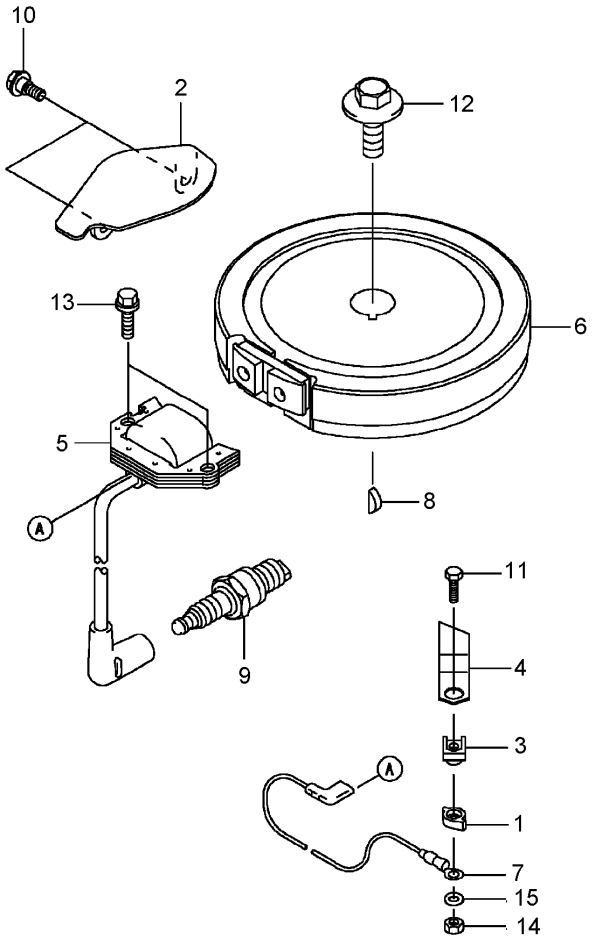

Electrical Equipment Assembly

Ref	Part No.	Qty.	Description
1	100-2652	1	Cover
2	108-2553	1	Cover
3	100-2653	1	Insulator
4	100-2796	1	Terminal
5	108-2554	1	Coil Ignition ASM
6	108-2555	1	Flywheel
7	108-2556	1	Wire-Lead
8	93-8571	1	Key
9	KW10676	1	Spark Plug
10	108-2544	2	Bolt
11	108-2558	1	Bolt
12	108-2559	1	Bolt
13	95-9893	2	Bolt-Flanged
14	100-2668	1	Nut-Hex
15	100-2798	1	Washer-Plain

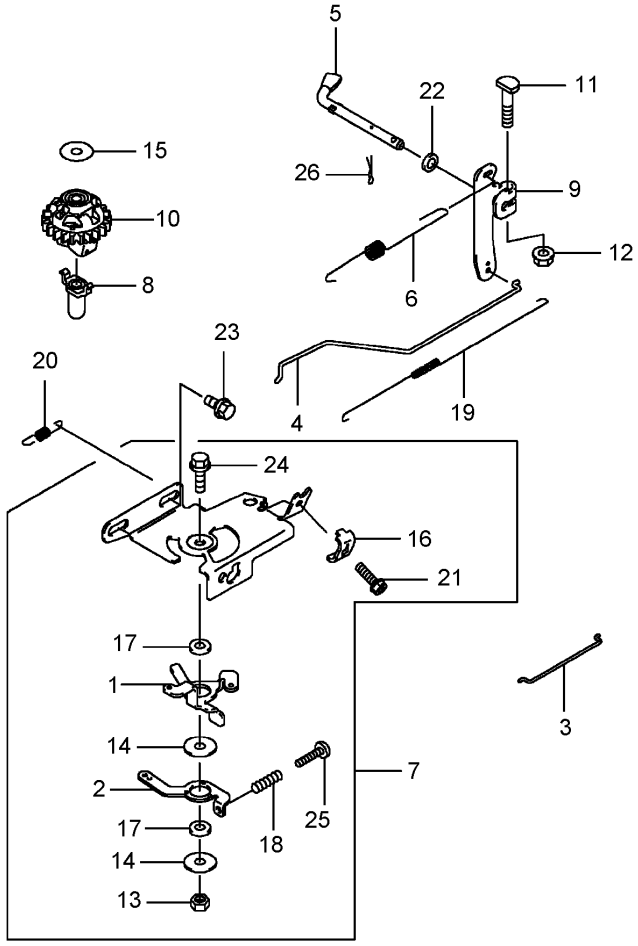

Control Equipment Assembly

Ref	Part No.	Qty.	Description
1	108-2560	1	Lever
2	108-2561	1	Lever
3	108-2562	1	Link-Choke
4	108-2563	1	Link-Throttle
5	108-2564	1	Arm-Pivot
6	108-2565	1	Spring-Govenor
7	108-2566	1	Control Panel ASM
8	108-2567	1	Sleeve
9	108-2568	1	Arm-Governor
10	108-2569	1	Governor ASM
11	108-2570	1	Bolt
12	108-2571	1	Nut
13	108-2572	1	Nut
14	100-2715	2	Washer
15	93-8612	1	Washer
16	95-9849	1	Clamp
17	100-2718	2	Collar
18	93-8588	1	Spring
19	108-2573	1	Spring-Throttle
20	108-2574	1	Spring
21	95-9853	1	Bolt
22	108-2575	1	Washer
23	100-2804	2	Bolt-Flanged
24	108-2576	1	Bolt-Flange

Ref	Part No.	Qty.	Description
25	108-2577	1	Screw-Pan
26	108-2578	1	Pin-Snap

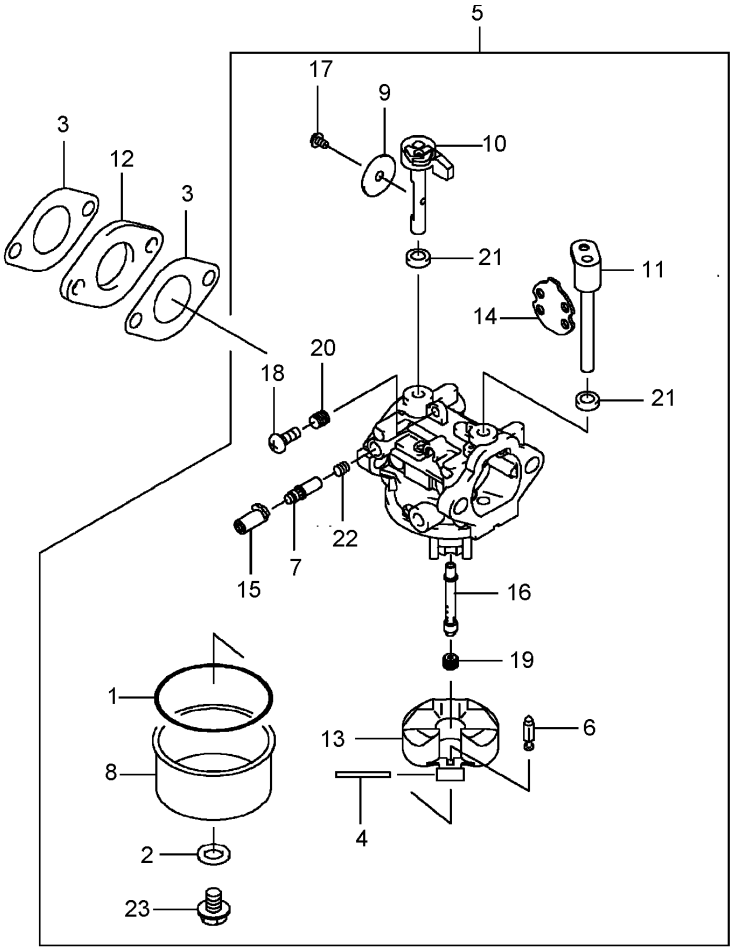

Carburetor Assembly

Ref	Part No.	Qty.	Description
1	108-2579	1	Gasket
2	108-2580	1	Gasket
3	108-2581	2	Gasket
4	108-2582	1	Shaft
5	108-2583	1	Carburetor ASM
6	108-2584	1	Needle-Jet
7	108-2585	1	Screw-Pilot, Air
8	108-2586	1	Chamber-Float
9	108-2587	1	Valve-Throttle
10	108-2588	1	Shaft-Carburetor
11	108-2589	1	Shaft-Carburetor
12	108-2590	1	Insulator
13	108-2591	1	Float ASM
14	108-2592	1	Choke Valve ASM
15	108-2593	1	Limiter
16	108-2594	1	Nozzle-Main
17	108-2595	1	Screw
18	108-2596	1	Screw
19	108-2597	1	Jet-Main (#74)
20	108-2598	1	Spring
21	108-2599	2	Seal
22	108-2600	1	Spring
23	108-2601	1	Screw

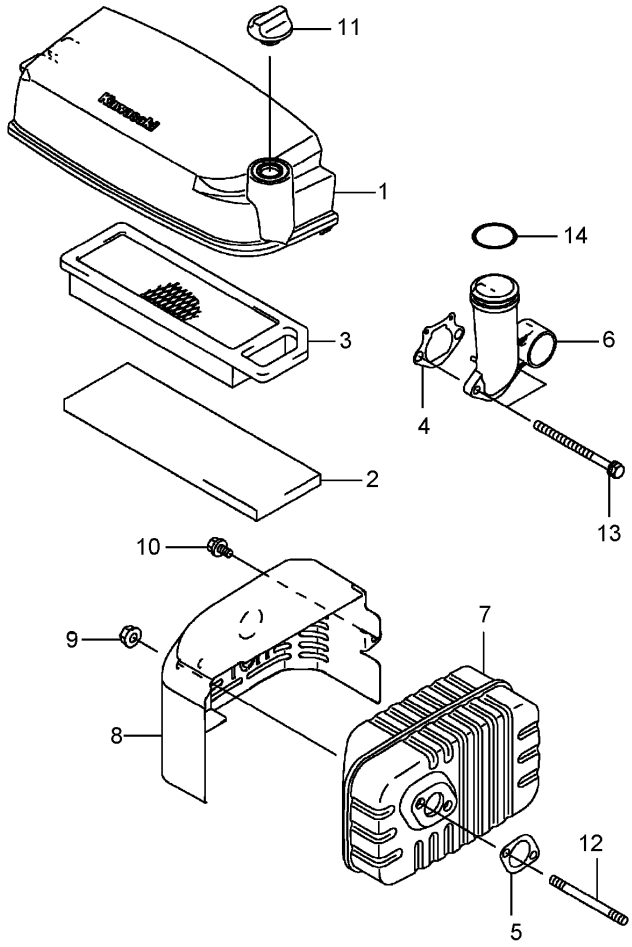

Air Filter and Muffler Assembly

Ref	Part No.	Qty.	Description
1	108-2602	1	Case-Filter, Air
2	108-2603	1	Element-Filter, Air
3	108-2604	1	Air Filter Element ASM
4	108-2605	1	Gasket-Pipe, Intake
5	108-2606	1	Gasket-Muffler
6	108-2607	1	Pipe-Intake
7	108-2608	1	Muffler
8	108-2609	1	Cover-Muffler
9	108-2610	2	Nut
10	108-2611	1	Bolt
11	108-2612	1	Nut
12	100-2761	2	Bolt-Stud
13	100-2762	2	Bolt
14	108-2613	1	O-Ring

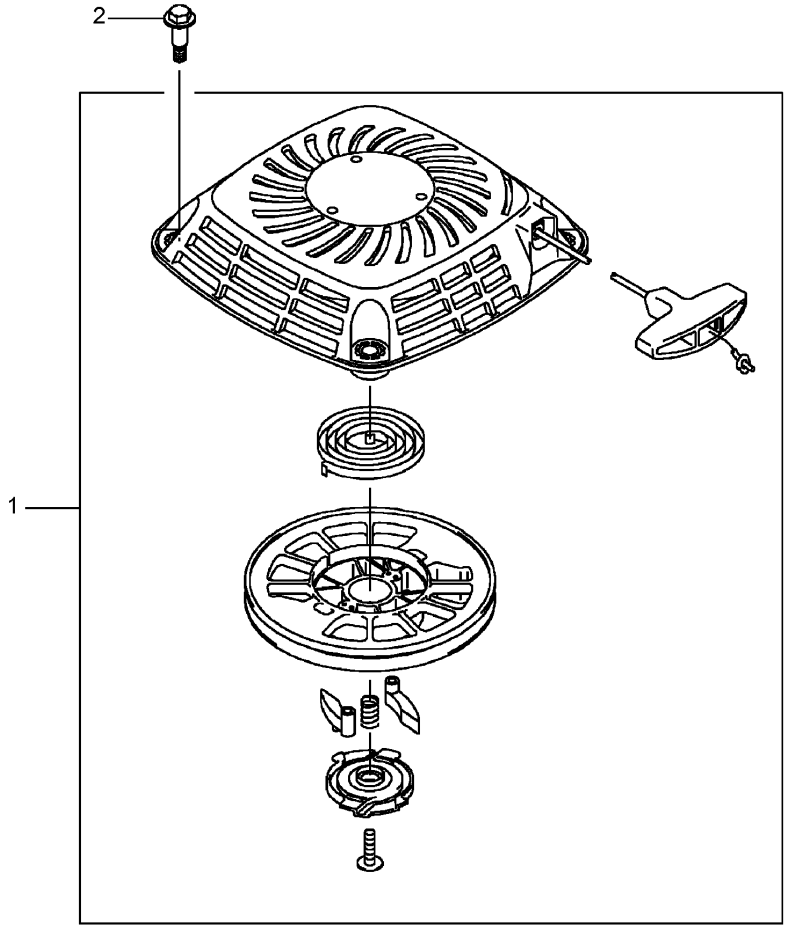

Starter Assembly

Ref	Part No.	Qty.	Description
1	108-2614	1	Starter-Recoil
2	108-2615	4	Bolt

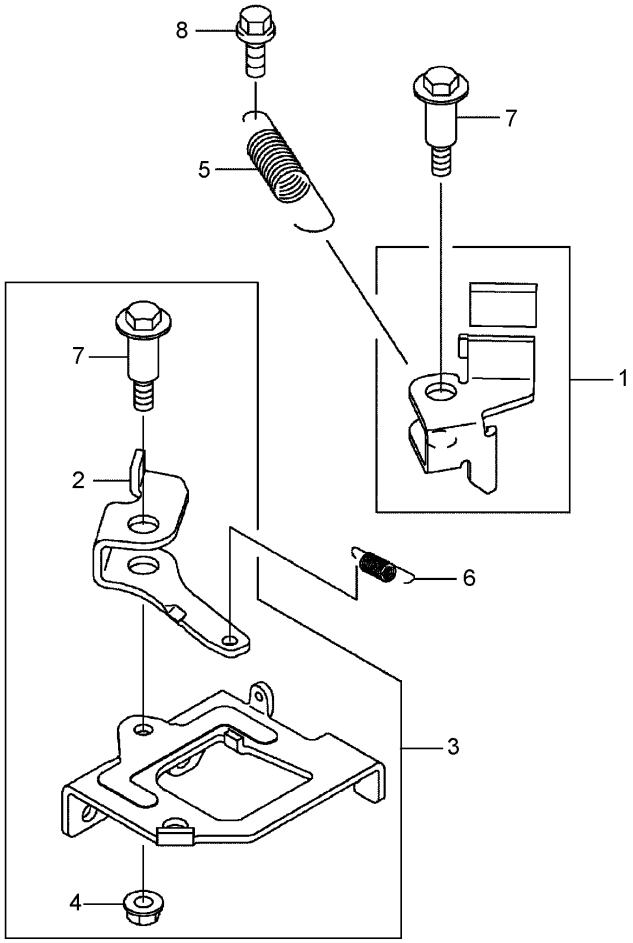

Brake and Lever Assembly

Ref	Part No.	Qty.	Description
1	108-2616	1	Lever
2	108-2617	1	Arm
3	108-2618	1	Brake Panel ASM
4	108-2619	1	Nut
5	108-2620	1	Spring
6	108-2621	1	Spring
7	108-2622	2	Bolt
8	108-2623	1	Bolt-Flange

NOTES


TORO®