Form No. 3354–704 Rev. D

TORO®

8 Blade DPA Cutting Unit with 5 inch Reel

Reelmaster® 5210 & 5410 Traction Units

Model No. 03661—Serial No. 260000001 and Up

Operator's Manual

CE

English (EN, GB)

Contents

	Page
Introduction	2
Safety	3
Safe Operating Practices	3
Safety and Instruction Decals	3
Specifications	4
General Specifications	4
Cutting Unit Accessories and Kits	5
Setup	6
Loose Parts Chart	6
Inspection	6
Cutting Unit Kickstand	6
Adjusting the Rear Shield	7
Mount the Counter weight	7
Adjustments	8
Adjusting the Bedknife to the Reel	8
Adjusting the Rear Roller	8
Height of Cut Chart Terms	10
Height of Cut Chart	11
Adjusting the Height of Cut	12
Operation	13
Cutting Unit Characteristics	13
Daily Adjustments of Cutting Unit	13
Maintenance	14
Lubrication	14
Adjusting the Reel Bearings	14
Servicing the Bedbar	15
The Toro General Commercial Products Warranty	16

Introduction

Read this manual carefully to learn how to operate and maintain your product properly. The information in this manual can help you and others avoid injury and product damage. Although Toro designs and produces safe products, you are responsible for operating the product properly and safely.

Whenever you need service, genuine Toro parts, or additional information, contact an Authorized Service Dealer or Toro Customer Service and have the model and serial numbers of your product ready. Figure 1 illustrates the location of the model and serial numbers on the product.

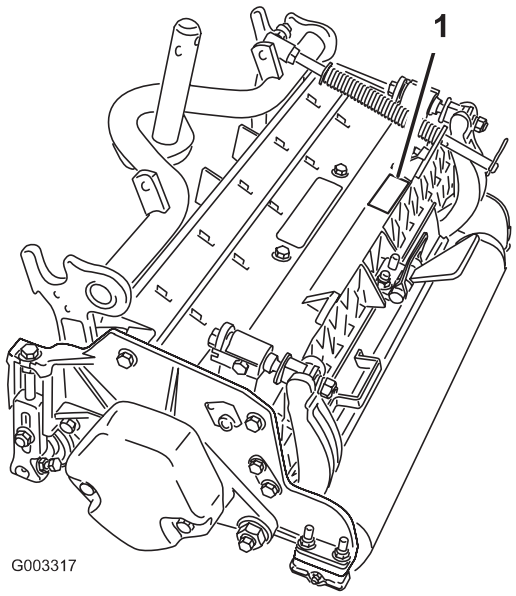

Figure 1

1. Location of the model and serial numbers

Write the product model and serial numbers in the space below:

Model No. _____

Serial No. _____

This manual identifies potential hazards and has special safety messages that help you and others avoid personal injury and even death. ***Danger***, ***Warning***, and ***Caution*** are signal words used to identify the level of hazard. However, regardless of the hazard, be extremely careful.

Danger signals an extreme hazard that *will* cause serious injury or death if you do not follow the recommended precautions.

Warning signals a hazard that *may* cause serious injury or death if you do not follow the recommended precautions.

Caution signals a hazard that may cause minor or moderate injury if you do not follow the recommended precautions.

This manual uses two other words to highlight information. **Important** calls attention to special mechanical information and **Note:** emphasizes general information worthy of special attention.

© 2006 by The Toro Company

8111 Lyndale Avenue South
Bloomington, MN 55420-1196

All Rights Reserved

Printed in the USA

Safety

Safe Operating Practices

- Read, understand, and follow all instructions in the traction unit operator's manual before operating the cutting unit.
- Read, understand, and follow all instructions in this operator's manual before operating the cutting unit.
- Never allow children to operate the cutting units. Do not allow adults to operate traction unit or cutting units without proper instruction. Only trained operators who have read this manual should operate the cutting units.
- Never operate the cutting units when under the influence of drugs or alcohol.
- Keep all shields and safety devices in place. If a shield, safety device or decal is illegible or damaged, repair or replace it before operation is commenced. Also tighten any loose nuts, bolts, and screws to ensure cutting unit is in safe operating condition.
- Always wear substantial shoes. Do not operate cutting units while wearing sandals, tennis shoes, sneakers or shorts. Also, do not wear loose fitting clothing which could get caught in moving parts. Always wear long pants and substantial shoes. Wearing safety glasses, safety shoes and a helmet is advisable and required by some local ordinances and insurance regulations.
- Remove all debris or other objects that might be picked up and thrown by the cutting unit reel blades. Keep all bystanders away from the working area.
- If the cutting blades strike a solid object or the unit vibrates abnormally, stop and shut the engine off. Check cutting unit for damaged parts. Repair any damage before restarting and operating the cutting unit.
- Lower the cutting units to the ground and remove key from ignition switch whenever machine is left unattended.
- Be sure cutting units are in safe operating condition by keeping nuts, bolts and screws tight.
- Remove key from ignition switch to prevent accidental starting of the engine when servicing, adjusting or storing the machine.
- Perform only those maintenance instructions described in this manual. If major repairs are ever needed or assistance is desired, contact an Authorized Toro Distributor.
- To ensure optimum performance and safety, always purchase genuine Toro replacement parts and accessories to keep the Toro all TORO. **Never use "will-fit" replacement parts and accessories made by other manufacturers.** Look for the Toro logo to assure genuineness. Using unapproved replacement parts and accessories could void the warranty of The Toro Company.

Safety and Instruction Decals



Safety decals and instructions are easily visible to the operator and are located near any area of potential danger. Replace any decal that is damaged or lost.

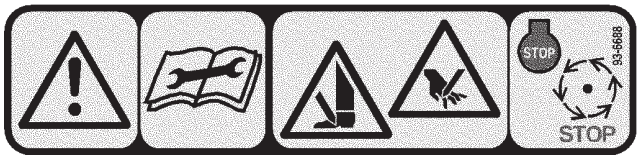

93-6688

1. Warning—read the instructions before servicing or performing maintenance
2. Cutting hazard of hand or foot—stop the engine and wait for moving parts to stop.

Specifications

General Specifications

Tractors	These cutting units will mount on the Reelmaster® 5210 & 5410 Traction Units.
Height of Cut	Cutting height is adjusted on the front roller by two vertical screws and held by two locking capscrews.
Height Of Cut Range	Standard bench height of cut range is .250 inch (3 mm) to 1.00 inch (25 mm). Bench height of cut range with the High Height of Cut Kit installed is 1.00 inch (25 mm) to 1.50 inches (38 mm). Effective HOC may vary depending on turf conditions, type of bedknife, rollers and attachments installed.
Reel Weldment	Reels are 5 inches (12.7 cm.) in diameter, 22 inches (56 cm.) in length. High strength low alloy steel blades are thru hardened and impact resistant.
Reel Bearings	Two double row self–aligning ball bearings, press fit onto reel shaft.
Power Attachment	The reel motors feature quick disconnect for removal or installation onto cutting unit. The cutting units can be driven from either end.
Frame	Die cast aluminum cross member with ductile iron side plates.
Rollers	The front roller is a 3 inch (76 mm) diameter plastic Wiehle roller. The rear roller is a 2.5 inch (43 mm) diameter steel full roller.
Bedknife	Replaceable single edged, high carbon steel bedknife is fastened to a machined cast iron bedbar with 8 screws. The EdgeMax™ bedknife is standard.
Bedknife Adjustment	Dual screw adjustment to the reel; detents corresponding to .0009 inch (.023 mm) bedknife movement for each indexed position.
Grass Shield	Adjustable rear shield with optional adjustable cut–off bar to improve grass discharge from reel in wet conditions.
Counterweight	A cast iron weight mounted opposite to the drive motor balances the cutting unit.
Maximum Reel Speed	2000 RPM.
Weight	112 lb. (51 kg)

Cutting Unit Accessories and Kits (see parts catalog for part numbers)

Note: All accessories and kits are 1 per cutting unit unless otherwise specified.

Grass Basket Kit: A series of clipping collection baskets attached to the front of the cutting units to collect grass clippings. This reduces grass clumping, improves aftercut appearance and minimizes the spread of unwanted grass types by collecting the seeds.

Rear Lift Cylinder Kit: 1 kit required for the tractor when grass baskets are installed on the cutting units. This kit limits the cutting unit raised height of the rear 2 cutting units to prevent the grass baskets from hitting the tractor frame.

Rear Roller Brush Kit: A high speed, high contact brush that keeps the rear roller free of grass and debris, which maintains a consistent height of cut and prevents clumping. This leads to a better aftercut appearance.

Groomer Kit: Rotating blades assembled behind the front roller which provide the best method for reducing grain and spongy turf by standing up the grass before cutting. The groomer also knocks off dew for decreased stickiness and clumping, opens up canopy for better grass clipping integration, and lifts grass for a clean crisp cut. The overall design improves the quality of cut for healthier turfgrass while improving the aftercut appearance.

Broomer Kit: Multiple brush strips woven into the helical groomer blades improve the effectiveness of the groomer kit. Performance of the groomer is enhanced by enabling a full width “Brooming” effect of turf while opening up canopy for better grass clipping integration. The combination of groomer and Broomer systems optimize the quality of cut and aftercut appearance for more consistent playing conditions.

Comb/Scraper Kit: A fixed comb installed behind the front roller which helps reduce grain and spongy turf by standing up the grass before cutting. A scraper for the front Wiehle roller is included in the kit.

High HOC Kit: New front roller brackets and additional spacers for the rear roller allows the cutting unit to achieve heights of cut above 1.00 inch (25 mm). The new front roller brackets also move the front roller out farther to improve after–cut appearance.

Shoulder Roller: Helps reduce over–lap marks for warm season grasses (Bermuda, Zoysia, Paspalum).

Collar Kit (6 per needed per roller): Helps reduce over–lap marks for warm season grasses (Bermuda, Zoysia, Paspalum). This kit is installed on the existing Wiehle roller, but is not as aggressive as the Shoulder roller.

Short Rear Roller: Helps reduce double roller marks for cool season grasses (Bent, Blue grass, Rye).

Full Front Roller: Helps produce more pronounced striping (repeated cutting in the same direction/path), however, effective height of cut is raised and quality of cut is reduced.

Scrapers (Wiehle, Shoulder, Rear roller, Full Front Roller): Fixed scrapers for all optional rollers are available for reducing grass build–up on rollers which can affect height of cut settings.

Setup

Note: Determine the left and right sides of the machine from the normal operating position.

Loose Parts Chart

Note: Use this chart as a checklist to ensure all parts necessary for assembly have been shipped. If any of these parts are missing, total setup cannot be completed.

Description	Qty.	Use
O–ring	1	Install on reel motor.
Operator's manual	1	Read before operating the machine.
Parts catalog	1	
Certificate of compliance	1	

Inspection

After the cutting unit is unboxed, inspect the following:

1. Check each end of the reel for grease. Grease should be visibly evident in the reel bearings and internal splines of the reel shaft.
2. Ensure that all nuts and bolts are securely tightened.
3. Make sure the carrier frame suspension operates freely and does not bind when moved back and forth.

Cutting Unit Kickstand

Whenever the cutting unit has to be tipped to expose the bedknife/reel, prop up the rear of the cutting unit with the kickstand (supplied with the traction unit) to make sure the nuts on the back end of the bedbar adjusting screws are not resting on the work surface (Fig. 2).

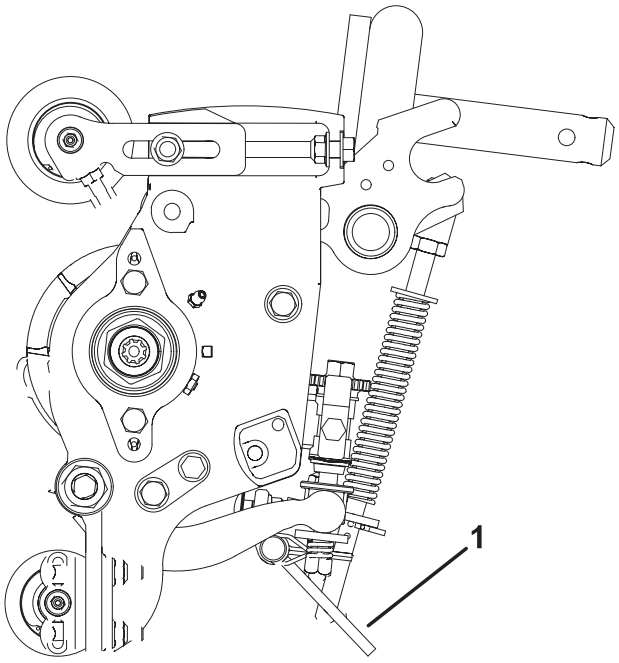

Figure 2

1. Cutting unit kickstand

Adjusting the Rear Shield

Under most conditions, best dispersion is attained when the rear shield is closed (front discharge). When conditions are heavy or wet, rear shield may be opened.

1. To open the rear shield (Fig. 3), loosen the capscrew securing the shield to the left side plate, rotate the shield to the open position and tighten the capscrew.

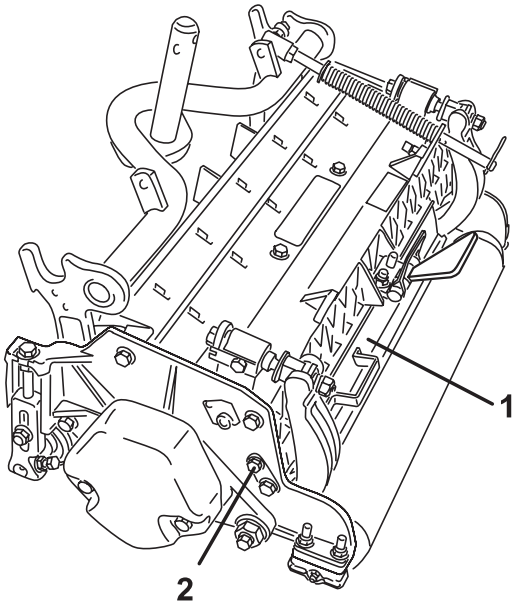

Figure 3

1. Rear shield
2. Capscrew

Mount the Counter weight

All cutting units are shipped with the counter weight mounted to the left end of the cutting unit. Use the following diagram to determine the position of the counter weights and reel motors.

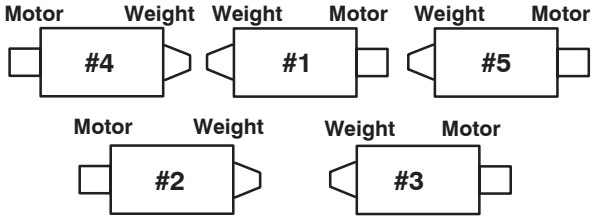

Figure 4

1. On the #2 and #4 cutting units, remove the 2 capscrews securing the counter weight to the left end of the cutting unit. Remove the counter weight (Fig. 5).

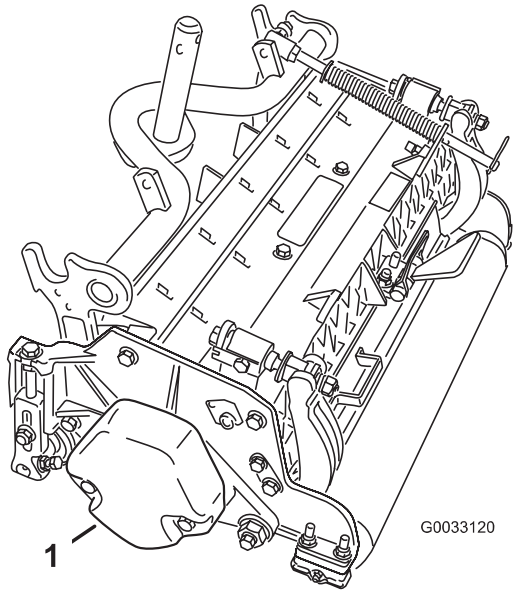

Figure 5

1. Counter weight

2. On right end of cutting unit, remove plastic plug from bearing housing (Fig. 6).
3. Remove the 2 capscrews from right side plate.(Fig. 6).

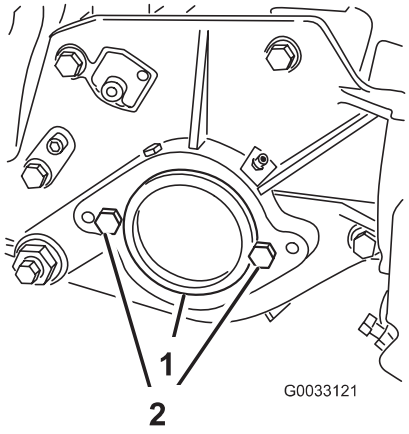

Figure 6

1. Plastic plug
2. Capscrew (2)

4. Install the counter weight to the right end of the cutting unit with the 2 screws previously removed.
5. Loosely install the 2 reel motor mounting capscrews to the left side plate of the cutting unit (Fig. 6).

Adjustments

Use the following procedures to ensure that the cutting units are adjusted properly.

Adjusting the Bedknife to the Reel

Bedknife to reel adjustment is accomplished by loosening or tightening bedbar adjusting screws, located on top of mower.

1. Position machine on a flat, level work surface. Make sure reel contact is removed by turning bedbar adjusting screws counterclockwise (Fig. 7).

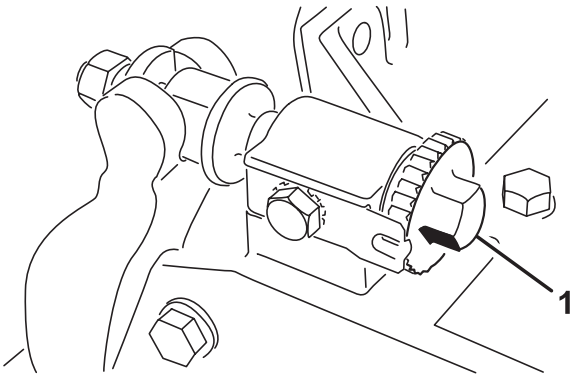

Figure 7

1. Bedbar adjusting screw

2. Tilt mower on back, onto the cutting unit kickstand, to expose bedknife and reel.

Important Make sure nuts on back end of bedbar adjusting screws are not resting on the work surface (Fig. 2).

3. At one end of reel, insert a strip of newspaper between reel and bedknife (Fig. 8). While slowly rotating reel forward, turn bedbar adjusting screw (Fig. 7) clockwise (on same end of reel, one click at a time, until paper is pinched lightly, when inserted from the front, parallel to the bedknife. A slight drag will be noted as the paper is pulled.

Note: Each time adjusting screw is rotated one click clockwise, bedknife moves .0009 in (.023 mm). closer to reel. **Do not overtighten the adjusting screws.**

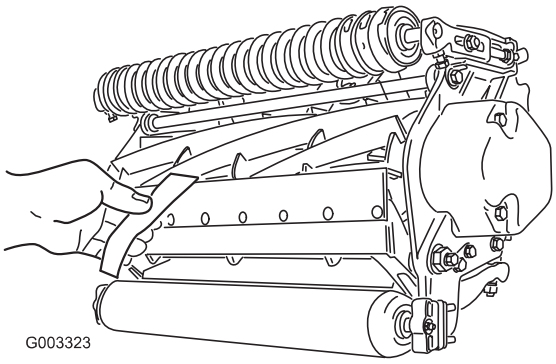

Figure 8

4. Check for light contact at other end of reel using paper and adjust as required.

5. After adjustment is accomplished, check to see if reel can pinch paper when inserted from the front and cut paper when inserted at a right angle to the bedknife (Fig. 8). It should be possible to cut paper with minimum contact between the bedknife and the reel blades. If excessive contact/reel drag is evident it will be either necessary to backlap or re–grind the cutting unit to achieve the sharp edges needed for precision cutting (Refer to the Toro manual for Sharpening Reel and Rotary Mowers, Form No. 80–300PT).

Adjusting the Rear Roller

1. Adjust rear roller brackets (Figs. 9) to the desired height of cut range.

   - Position the required amount of spacers below the sideplate mounting flange (Fig. 9) per the HOC Chart on page 11.

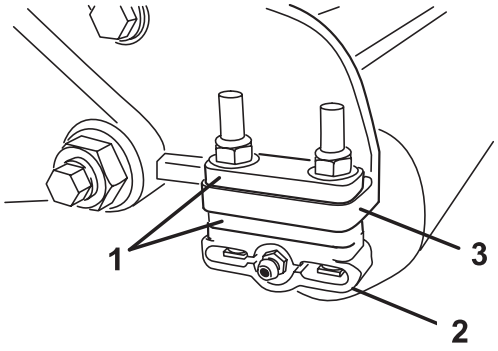

Figure 9

1. Spacer
2. Roller bracket
3. Sideplate mounting flange

2. To adjust rear roller proceed as follows:

- Raise rear of cutting unit and place a block under bedknife.
- Remove (2) nuts securing each roller bracket and spacer to each sideplate mounting flange.
- Lower roller and screws from sideplate mounting flanges and spacers.
- Place spacers onto screws on roller brackets.
- Re–secure roller bracket and spacers to underside of sideplate mounting flanges with nuts previously removed.

3. Verify that bedknife to reel contact is correct. Tip mower to expose front and rear rollers and bedknife.

Note: The position of the rear roller to the reel is controlled by the machining tolerances of the assembled components and paralleling is not required. A limited amount of adjustment is possible by setting the cutting unit on a surface plate and loosening the sideplate mounting capscrews (Fig. 10). Adjust and re–tighten capscrews. Torque the capscrews to 27–33 ft–lb.

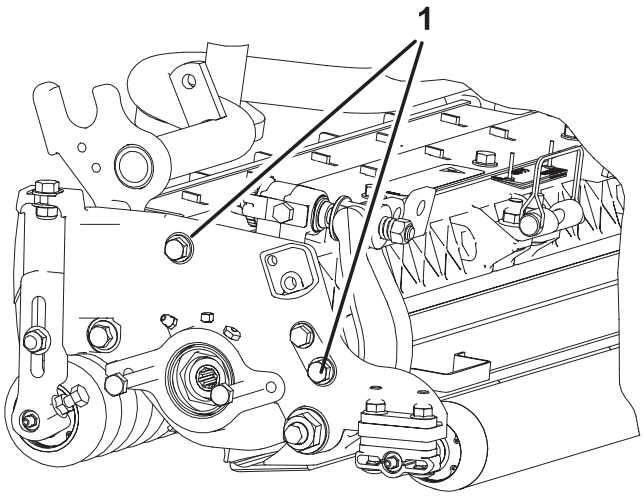

Figure 10

1. Sideplate mounting capscrews

Height of Cut Chart Terms

Height of Cut Setting (HOC)

The desired Height of Cut.

Aggressiveness of Cut

Cutting unit Aggressiveness of Cut has a significant impact on the performance of the cutting unit. Aggressiveness of Cut refers to the angle of the bedknife relative to the ground (Fig. 11).

The best cutting unit setup is dependent on your turf conditions and desired results. Experience with the cutting unit on your turf will determine the best setting to use. Aggressiveness of cut may be adjusted throughout the cutting season to allow for various turf conditions.

In general, less to normal aggressive settings are more appropriate for warm season grasses (Bermuda, Paspalum, Zoysia) while cool season grasses (Bent, Bluegrass, Rye) may require normal to more aggressive setups. More aggressive setups cut more grass off by allowing the spinning reel to pull more grass up into the bedknife.

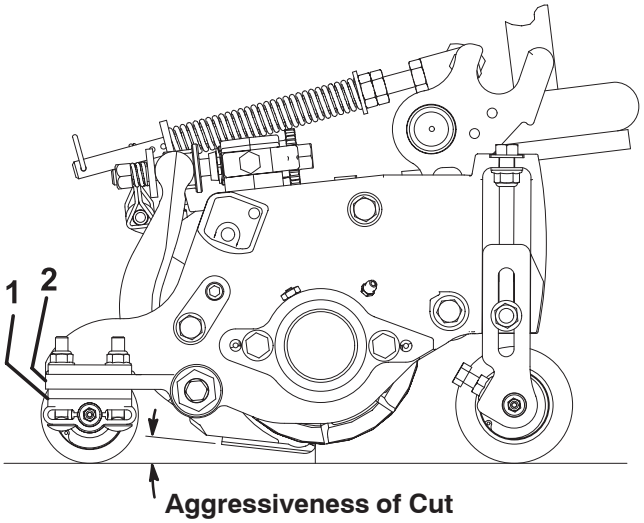

Figure 11

1. Rear spacers
2. Sideplate mounting flange

Rear Spacers

The number of rear spacers determines the aggressiveness of cut for the cutting unit. For a given height of cut, adding spacers, below the sideplate mounting flange, increases the aggressiveness of the cutting unit. All cutting units on a given machine must be set to the same aggressiveness of cut (Number of rear spacers, part no. 106–3925), otherwise the after-cut appearance could be negatively affected (Fig. 11).

Chain Links

The location at which the lift arm chain is attached determines the rear roller pitch angle (Fig. 12).

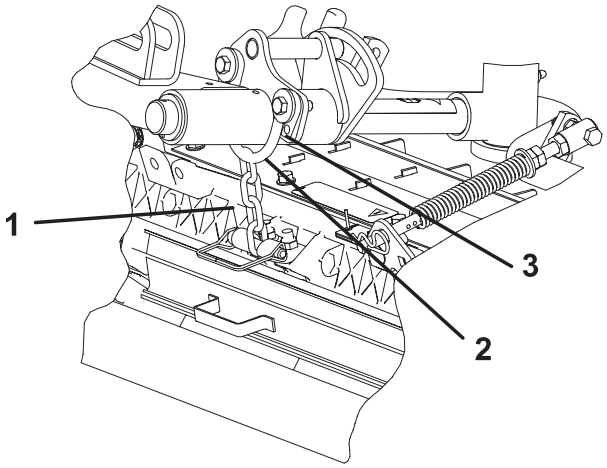

Figure 12

1. Lift chain
2. U Bracket
3. Bottom hole

Groomer

These are the recommended height of cut settings when a groomer kit is installed on the cutting unit.

Height of Cut Chart

Height of Cut Setting (HOC)	Aggressiveness of Cut	Number of Rear Spacers	Number of Chain Links	With Groomer Kits installed
0.250”	Less Normal More	0 0 1	3+ 3+ 3	Y Y –
0.375”	Less Normal More	0 1 2	4 3 3	Y Y –
0.500”	Less Normal More	0 1 2	4 3+ 3	Y Y Y
0.625”	Less Normal More	1 2 3	4 3 3	Y Y –
0.750”	Less Normal More	2 3 4	3+ 3 3	Y Y –
0.875”	Less Normal More	2 3 4	4 3 3	Y Y –
1.000”	Less Normal More	3 4 5	3+ 3 3	Y Y –
1.125”*	Less Normal More	4 5 6	4 3 3	– – –
1.250” *	Less Normal More	4 5 6	4 3 3	– – –
1.375” *	Less Normal More	4 5 6	4 3 3	– – –
1.500” *	Less Normal More	5 6 7	3+ 3 3	– – –

\+ Indicates the U bracket, on lift arm, is positioned in the bottom hole (Fig. 12).

* High HOC Kit (Part No. 110–9600) must be installed. Front HOC bracket must be positioned in the top sideplate hole.

Note: Changing one chain link will change the rear roller pitch angle movement by 7.0 degrees.

Note: Changing the U bracket, on the lift arm, to the bottom hole will add 3.5 degrees to the rear roller pitch angle

Adjusting the Height of Cut

Note: For heights of cut greater than 1.00” the High Height of Cut Kit must be installed.

1. Loosen locknuts securing height-of-cut arms to cutting unit side plates (Fig. 13).

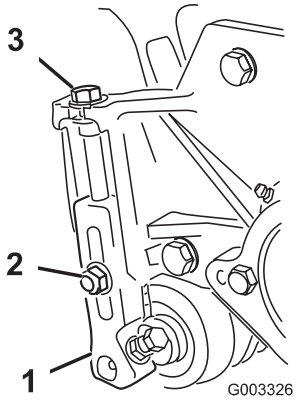

Figure 13

1. Height-of-cut arm
2. Locknut
3. Adjusting screw

2. Loosen nut on gauge bar (Fig. 14) and set adjusting screw to desired height-of-cut. Distance between bottom of screw head and face of bar is height-of-cut.

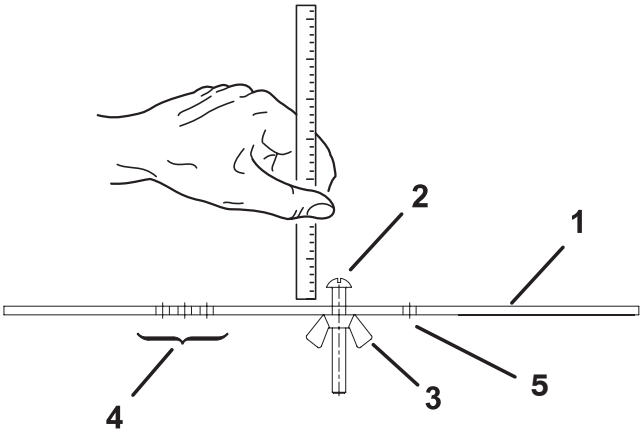

Figure 14

1. Gauge bar
2. Height adjusting screw
3. Nut
4. Holes used for setting Groomer HOG
5. Hole not used

3. Hook the screw head on cutting edge of bedknife and rest rear end of bar on rear roller (Fig. 15).

4. Rotate the adjusting screw until the front roller contacts the gauge bar. Adjust both ends of roller until entire roller is parallel to the bedknife.

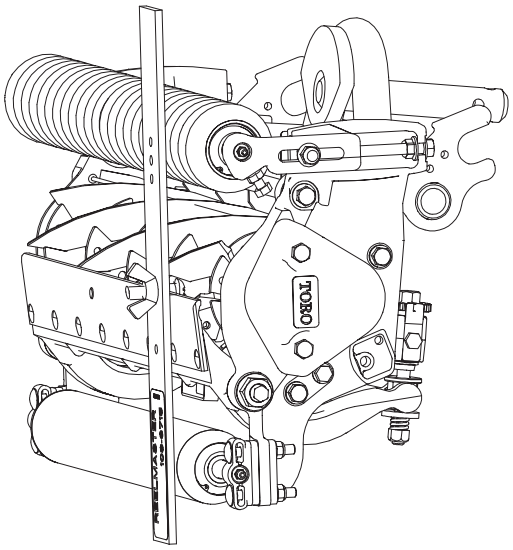

Figure 15

Important When set properly, the rear and front rollers will contact the gauge bar and the screw will be snug against the bedknife. This ensures that the height-of-cut is identical at both ends of the bedknife.

5. Tighten nuts to secure adjustment. Do not overtighten nut. Tighten enough to remove play from washer.

Note: Use the following chart to determine which bedknife is best suited for the desired height of cut.

Recommended Bedknife/Height of Cut Chart

Bedknife	Part No.	Bedknife Lip Height*	Height of Cut
Low HOC (Optional)	110–4084	.220	.250–.375”
EdgeMax™ (Production)	108–9095	.270	.375–1.50”
Standard (Optional)	108–9096	.270	.375–1.50”
HD (Optional)	110–4074	.370	.500–1.50”

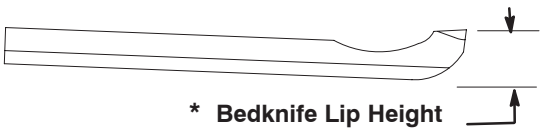

*** Bedknife Lip Height**

Operation

Note: Determine the left and right sides of the machine from the normal operating position.

Cutting Unit Characteristics

The dual knob bedknife-to-reel adjustment system incorporated in this cutting unit simplifies the adjustment procedure needed to deliver optimum mowing performance. The precise adjustment possible with the dual knob/bedbar design gives the necessary control to provide a continual self-sharpening action—thus maintaining sharp cutting edges, ensuring good quality-of-cut, and greatly reducing the need for routine backlapping.

Daily Adjustments of Cutting Unit

Prior to mowing each day, or as required, each cutting unit must be checked to verify proper bedknife-to-reel contact. **This must be performed even though quality of cut is acceptable.**

1. Lower the cutting units onto a hard surface, shut off the engine, and remove the ignition key.
2. Slowly rotate the reel in a reverse direction, listening for reel-to-bedknife contact. If no contact is evident, turn the bedknife adjusting knobs clockwise, one click at a time, until light contact is felt and heard.

Note: The adjustment knobs have detents corresponding to 0.0009 in. (0.023 mm) bedknife movement for each indexed position.

3. If excessive contact is felt, turn the bedknife adjusting knobs counterclockwise, one click at a time until no contact is evident. Then turn the bedknife adjusting knobs one click at a time clockwise, until light contact is felt and heard.

Important Light contact is preferred at all times. If light contact is not maintained, the bedknife/reel edges will not sufficiently self-sharpen and dull cutting edges will result after a period of operation. If excessive contact is maintained, bedknife/reel wear will be accelerated, uneven wear can result, and quality of cut may be adversely affected.

Note: As the reel blades continue to run against the bedknife, a slight burr will appear on the front cutting edge surface along the full length of the bedknife. If a file is occasionally run across the front edge to remove this burr, improved cutting can be obtained.

After extended running, a ridge will eventually develop at both ends of the bedknife. These notches must be rounded off or filed flush with the cutting edge of the bedknife to ensure smooth operation.

Note: Over time, the chamfer (Fig. 16) will need to be reground as it is only designed to last 40% of the bedknife life.

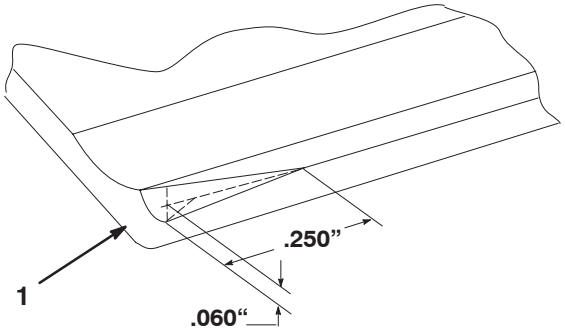

Figure 16

1. Lead–in chamfer on right end of bedknife

Note: Do not make lead–in chamfer too large as it may cause turf tufting.

Maintenance

Note: Determine the left and right sides of the machine from the normal operating position.

Lubrication

Each cutting unit has (6) grease fittings (Fig. 17) that must be lubricated regularly with No. 2 General Purpose Lithium Base Grease.

The lubrication points are front roller (2), rear roller (2) and reel bearing (2)

Important Lubricating cutting units immediately after washing helps purge water out of bearings and increases bearing life.

1. Wipe each grease fitting with a clean rag.
2. Apply grease until clean grease is seen coming out of roller seals and bearing relief valve.
3. Wipe excess grease away.

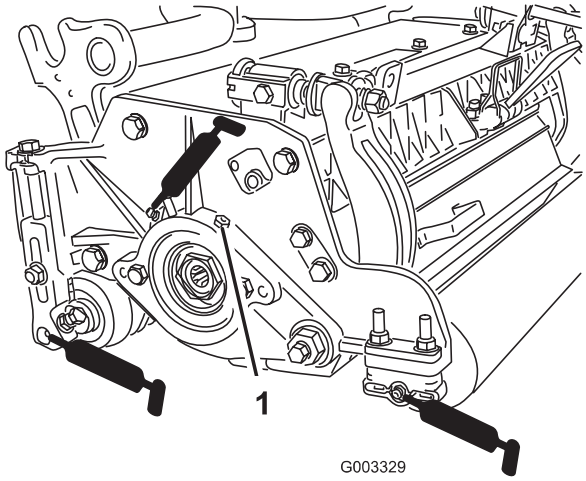

Figure 17

1. Relief valve

Adjusting the Reel Bearings

To ensure long life of the reel bearings, periodically check if reel end play exists. The reel bearings can be checked and adjusted as follows:

1. Loosen reel to bedknife contact by turning the bedknife adjusting knobs (Fig. 18) counter–clockwise until no contact exists.

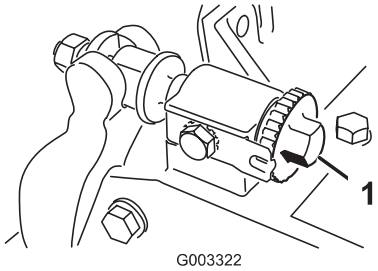

Figure 18

1. Bedknife adjusting knob

2. Using a rag or thickly padded glove, hold on to the reel blade and try to move the reel assembly side to side (Fig. 19).

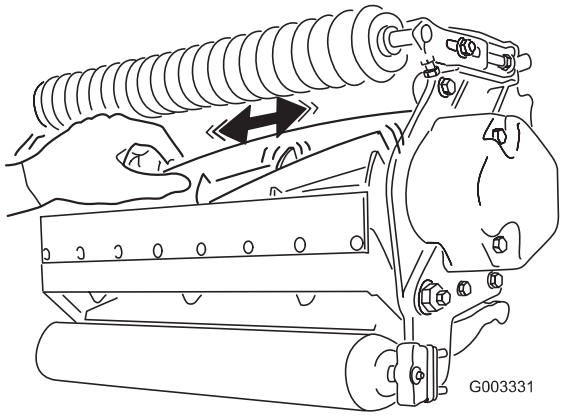

Figure 19

3. If end play exists, proceeded as follows:

   A. Loosen external set screw securing bearing adjusting nut to bearing housing located on the left side of the cutting unit (Fig. 20).

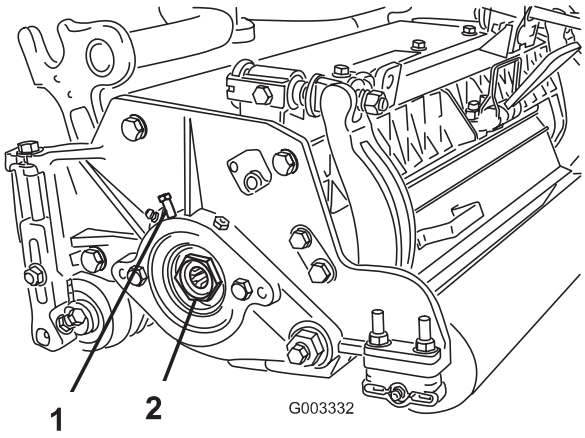

Figure 20

1. Set screw
2. Bearing adjusting nut

B. Using a 1–3/8” socket wrench, slowly tighten the reel bearing adjustment nut until no end play of the reel exists. If adjusting nut does not eliminate reel end play, replace reel bearings.

Note: Reel bearings **do not** require pre–load. Over tightening reel bearing adjuster nut will damage reel bearings.

4. Retighten set screw securing bearing adjusting nut to bearing housing. Torque to 12–15 in–lbs.

Servicing the Bedbar

Removing the Bedbar

1. Turn bedbar adjuster screws, counterclockwise, to back bedknife away from reel (Fig. 21).

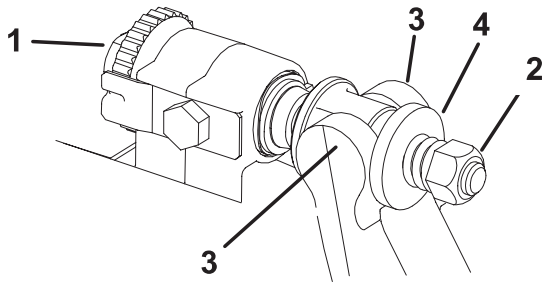

Figure 21

1. Bedbar adjusting screw
2. Spring tension nut
3. Bedbar
4. Washer

2. Back out the spring tension nut, until the washer is no longer tensioned against the bedbar (Fig. 21).

3. On each side of the machine, loosen the locknut securing the bedbar bolt (Fig. 22).

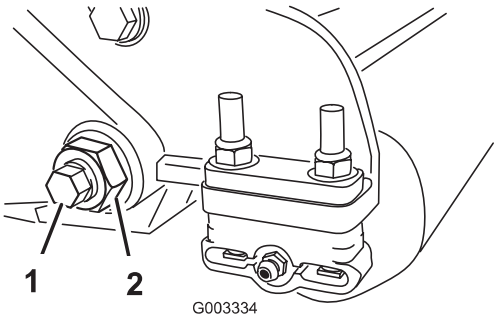

Figure 22

1. Bedbar bolt
2. Lock nut

4. Remove each bedbar bolt allowing bedbar to be pulled downward and removed from machine (Fig. 22). Account for 2 nylon and 1 stamped steel washers on each end of bedbar (Fig. 23).

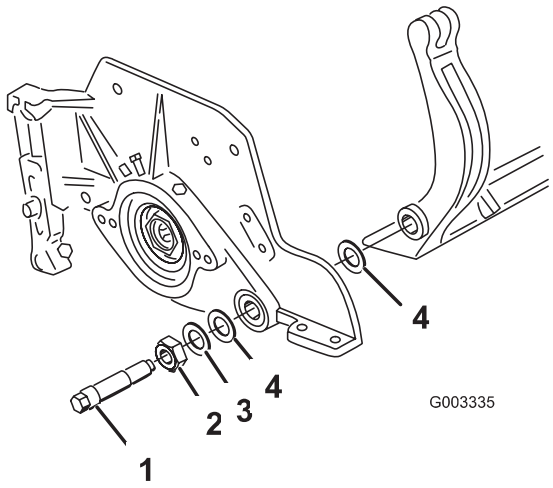

Figure 23

1. Bedbar bolt
2. Nut
3. Steel washer
4. Nylon washer

Assembling the Bedbar

1. Install bedbar, positioning mounting ears between washer and bedbar adjuster.

2. Secure bedbar to each side plate with bedbar bolts (nuts on bolts) and 6 washers. A nylon washer is to be positioned on each side of side plate boss. Place a steel washer outside each of the nylon washers (Fig. 23). Torque bedbar bolts to 27–33 ft.-lb. Tighten locknuts until the outside steel washer stops rotating and end play is removed but do not over–tighten or deflect side plates. Washers on inside may have a gap.

3. Tighten spring tension nut until spring is collapsed, then back off 1/2 turn (Fig. 24).

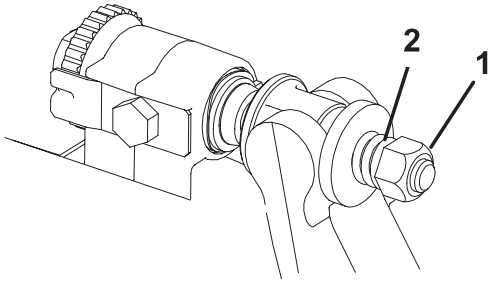

Figure 24

1. Spring tension nut
2. Spring

4. Adjust bedbar; refer to Adjusting the Bedknife to the Reel, page 8.

The Toro General Commercial Products Warranty

A Two-Year Limited Warranty

Conditions and Products Covered

The Toro Company and its affiliate, Toro Warranty Company, pursuant to an agreement between them, jointly warrant your Toro Commercial Product ("Product") to be free from defects in materials or workmanship for two years or 1500 operational hours*, whichever occurs first. Where a warrantable condition exists, we will repair the Product at no cost to you including diagnosis, labor, parts, and transportation. This warranty begins on the date the Product is delivered to the original retail purchaser.

* Product equipped with hour meter

Instructions for Obtaining Warranty Service

You are responsible for notifying the Commercial Products Distributor or Authorized Commercial Products Dealer from whom you purchased the Product as soon as you believe a warrantable condition exists.

If you need help locating a Commercial Products Distributor or Authorized Dealer, or if you have questions regarding your warranty rights or responsibilities, you may contact us at:

Toro Commercial Products Service Department
Toro Warranty Company
8111 Lyndale Avenue South
Bloomington, MN 55420-1196
952-888-8801 or 800-982-2740
E-mail: commercial.service@toro.com

Owner Responsibilities

As the Product owner, you are responsible for required maintenance and adjustments stated in your operator's manual. Failure to perform required maintenance and adjustments can be grounds for disallowing a warranty claim.

Items and Conditions Not Covered

Not all product failures or malfunctions that occur during the warranty period are defects in materials or workmanship. This express warranty does not cover the following:

- Product failures which result from the use of non-Toro replacement parts, or from installation and use of add-on, modified, or unapproved accessories
- Product failures which result from failure to perform required maintenance and/or adjustments
- Product failures which result from operating the Product in an abusive, negligent or reckless manner
- Parts subject to consumption through use unless found to be defective. Examples of parts which are consumed, or used up, during normal Product operation include, but are not limited to, blades, reels, bedknives, tines, spark plugs, castor wheels, tires, filters, belts, and certain sprayer components such as diaphragms, nozzles, and check valves, etc.
- Failures caused by outside influence. Items considered to be outside influence include, but are not limited to, weather, storage practices, contamination, use of unapproved coolants, lubricants, additives, or chemicals, etc.
- Normal "wear and tear" items. Normal "wear and tear" includes, but is not limited to, damage to seats due to wear or abrasion, worn painted surfaces, scratched decals or windows, etc.

Parts

Parts scheduled for replacement as required maintenance are warranted for the period of time up to the scheduled replacement time for that part.

Parts replaced under this warranty become the property of Toro. Toro will make the final decision whether to repair any existing part or assembly or replace it. Toro may use factory remanufactured parts rather than new parts for some warranty repairs.

General Conditions

Repair by an Authorized Toro Distributor or Dealer is your sole remedy under this warranty.

Neither The Toro Company nor Toro Warranty Company is liable for indirect, incidental or consequential damages in connection with the use of the Toro Products covered by this warranty, including any cost or expense of providing substitute equipment or service during reasonable periods of malfunction or non-use pending completion of repairs under this warranty. Except for the Emissions warranty referenced below, if applicable, there is no other express warranty. All implied warranties of merchantability and fitness for use are limited to the duration of this express warranty.

Some states do not allow exclusions of incidental or consequential damages, or limitations on how long an implied warranty lasts, so the above exclusions and limitations may not apply to you.

This warranty gives you specific legal rights, and you may also have other rights which vary from state to state.

Note regarding engine warranty: The Emissions Control System on your Product may be covered by a separate warranty meeting requirements established by the U.S. Environmental Protection Agency (EPA) and/or the California Air Resources Board (CARB). The hour limitations set forth above do not apply to the Emissions Control System Warranty. Refer to the Engine Emission Control Warranty Statement printed in your operator's manual or contained in the engine manufacturer's documentation for details.

Countries Other than the United States or Canada

Customers who have purchased Toro products exported from the United States or Canada should contact their Toro Distributor (Dealer) to obtain guarantee policies for your country, province, or state. If for any reason you are dissatisfied with your Distributor's service or have difficulty obtaining guarantee information, contact the Toro importer. If all other remedies fail, you may contact us at Toro Warranty Company.

Part No. 374-0031 Rev. C