FORM NO. 3314-601

TORO®

MODEL NO. 30224-10141 & UP

PARTS CATALOG

GROUNDSMASTER® 224
TRACTION UNIT WITH ACCESSORIES

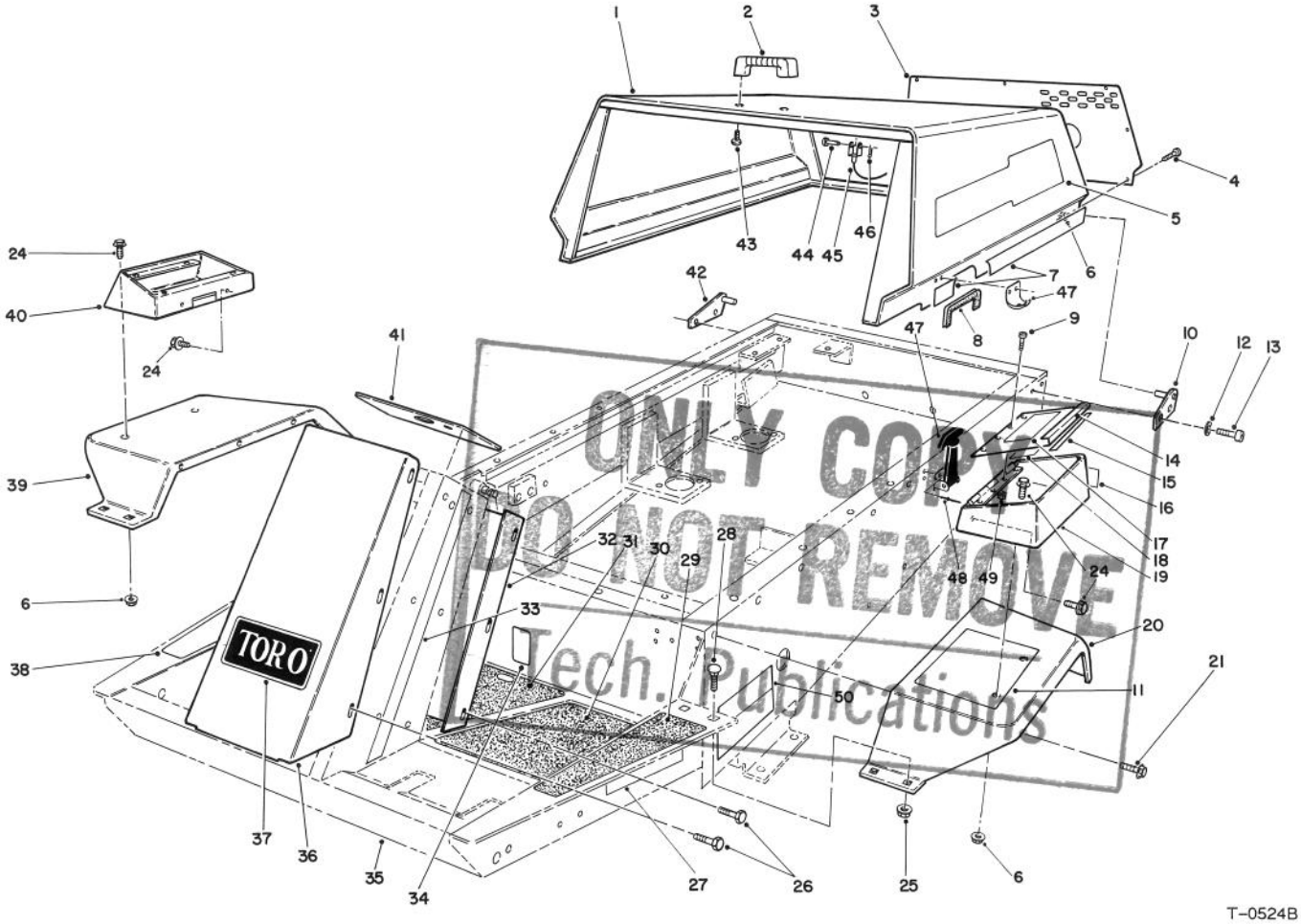

T-0524B

BODY ASSEMBLY

Ref. No.	Part No.	Description	No. Used
1	63-6950	Assembly - Hood	1
2	65-5100	Handle - Hood	1
3	63-7030	Screen - Hood	1
4	321-39	Screw - Cap Hex. Hd.	7
5	71-3390	Decal - GM 224	2
6	32128-33	Nut - Flange Hd.	11
7	66-8680	Decal - Hood L.H.	1
*	66-8670	Decal - Hood R.H.	1
8	66-8110	Trim - Hood	1
9	3290-359	Screw - Machine	4
10	63-6900	Plate Hinge L.H.	1
11	76-4790	Pad - Rubber	1
12	3255-8	Washer - Lock	4
13	3274-32	Screw - Hex. Hd. Socket	4
14	66-3040	Cover - Tool Box	1
15	66-3050	Strip - Magnetic	1

Ref. No.	Part No.	Description	No. Used
16	27-7310	Decal (Over Fill Caution)	1
17	66-8880	Decal - Caution	1
18	71-3520	Decal - Service	1
19	66-2830	Box - Tool	1
20	63-7310	Fender L.H.	1
21	3234-14	Screw - Flange Hd.	8
24	3234-13	Screw - Flange Hd.	8
25	32128-20	Nut - Flange	4
26	46-6810	Screw - Cap Hex. Hd.	14
27	67-1720	Decal - Caution	2
28	3230-23	Bolt - Carriage	4
29	66-3200	Tread - Foot Rest L.H.	1
30	66-3210	Tread - Foot L.H.	1
31	66-3220	Tread - Foot R.H.	1
32	63-7320	Cover - Tower Rear	1
33	66-8760	Decal - Tower L.H.	1

*Not Illustrated

TPS

© The TORO Company - 1991

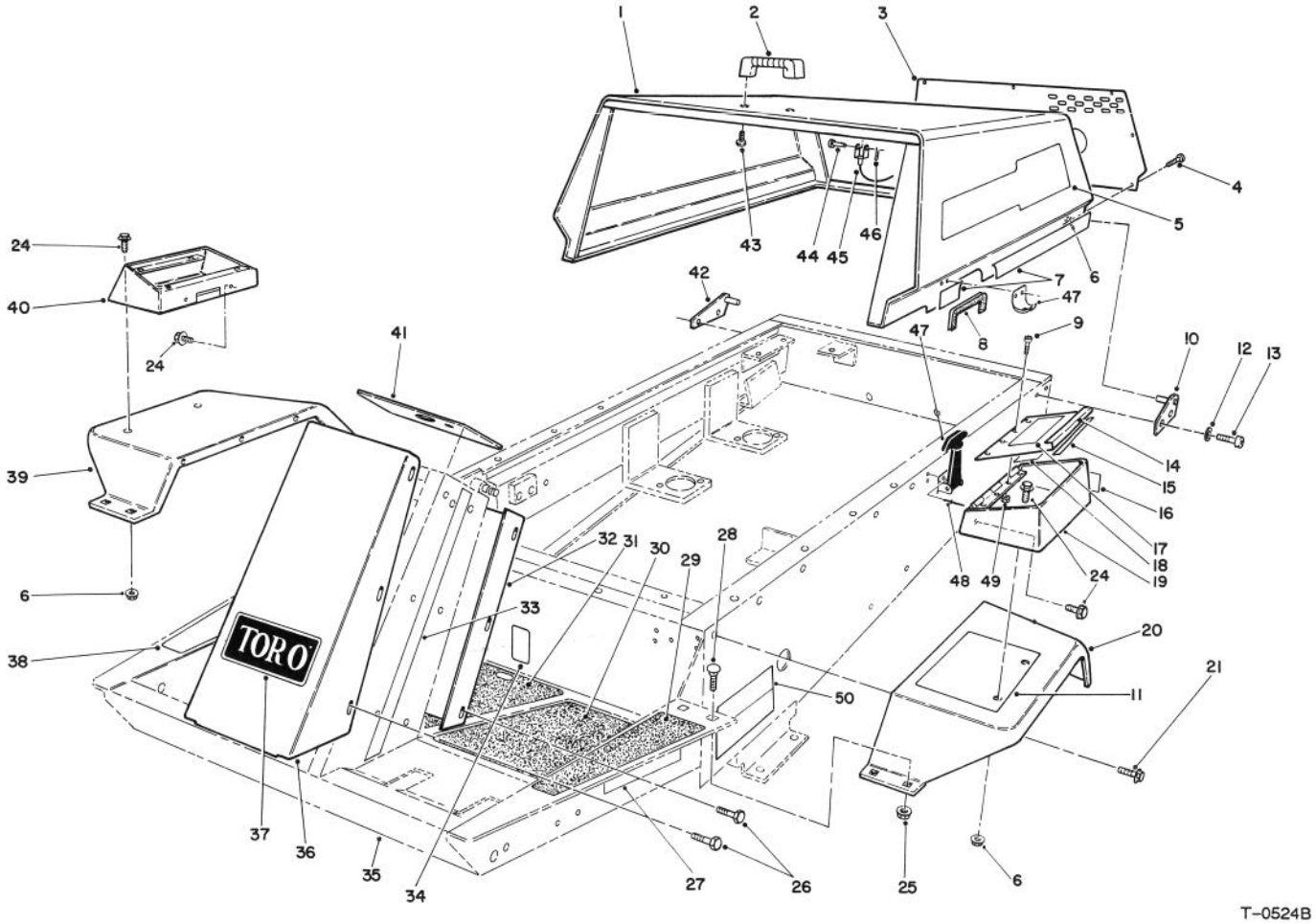

BODY ASSEMBLY (Continued)

Ref. No.	Part No.	Description	No. Used
33	66-8770	Decal - Tower R.H.	1
34	53-4430	Decal - Oil	1
35	71-3110	Assembly - Frame	1
36	63-7330	Cover - Tower Front	1
37	62-5550	Decal - TORO	1
38	66-8890	Decal - Traction Pedal	1
39	63-7300	Fender - R.H.	1
40	63-8050	Box - Control	1
41	66-2470	Plate - Tower	1

Ref. No.	Part No.	Description	No. Used
42	63-6890	Plate - Hinge R.H.	1
43	46-8091	Screw - Cap Hex. Hd.	2
44	283-58	Pin - Clevis	1
45	66-2870	Cable - Hood Stop	1
46	3272-10	Pin - Cotter	1
47	59-9740	Assy. - Latch, Flex. Draw	1
48	3290-271	Rivet	4
49	3296-12	Nut - Hex.	4
50	75-0810	Decal - Caution	2

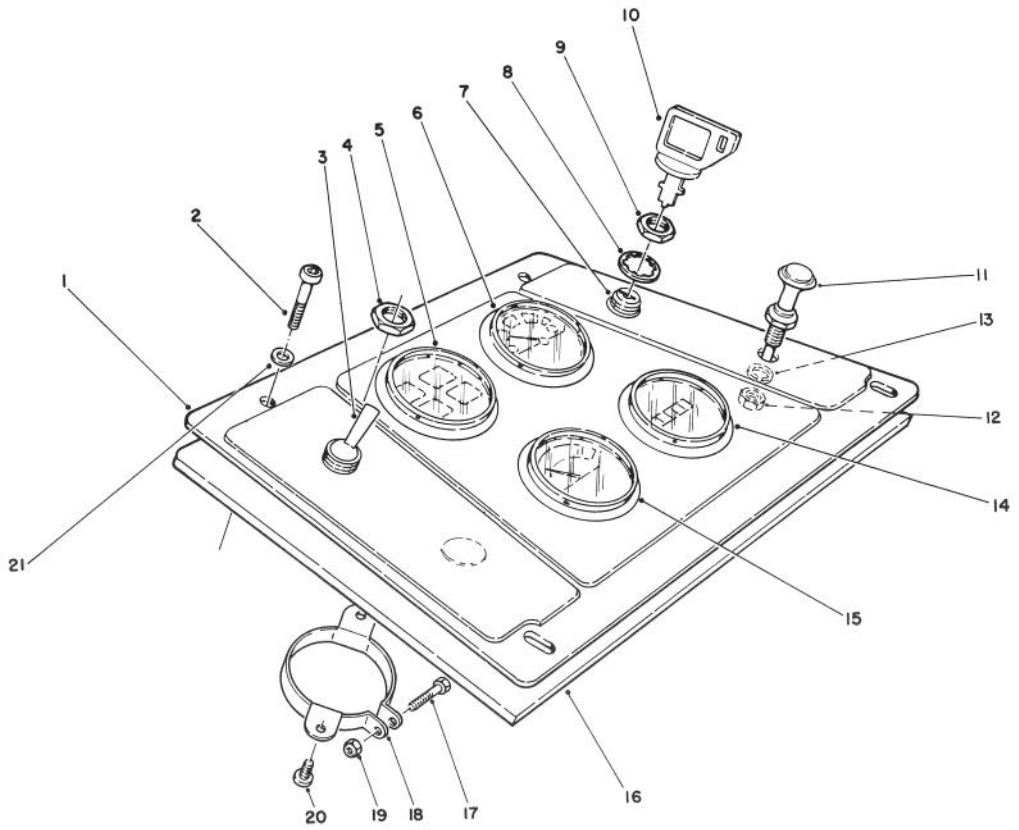

T-0841

CONTROL PANEL ASSEMBLY

Ref. No.	Part No.	Description	No. Used
1	71-3490	Panel - Control	1
2	3274-68	Screw - Socket Button Hd.	4
3	37-2610	Switch - PTO (Incl. Ref. #4)	1
4	218-500	Nut - Hex.	1
5	66-2960	Cluster - Warning Light	1
6	66-2940	Gage - Fuel	1
7	27-2360	Switch - Ignition (Incl. Ref. #8-10)	1
8	218-447	Washer - Lock	1
9	218-446	Nut - Hex.	1
10	63-8360	Key - Ignition	1

Ref. No.	Part No.	Description	No. Used
11	71-2890	Control - Choke	1
12	3220-3	Nut - Jam	1
13	3253-21	Washer - Lock	1
14	66-2950	Meter - Hour	1
15	63-7430	Gage - Temperature	1
16	71-3480	Plate - Control Panel	1
17	32105-1	Screw	1
18	69-4780	Clamp - Gauge	1
19	3296-2	Nut - Lock	1
20	32144-1	Screw - Hex. Hd.	2
21	3256-1	Washer - Flat	4

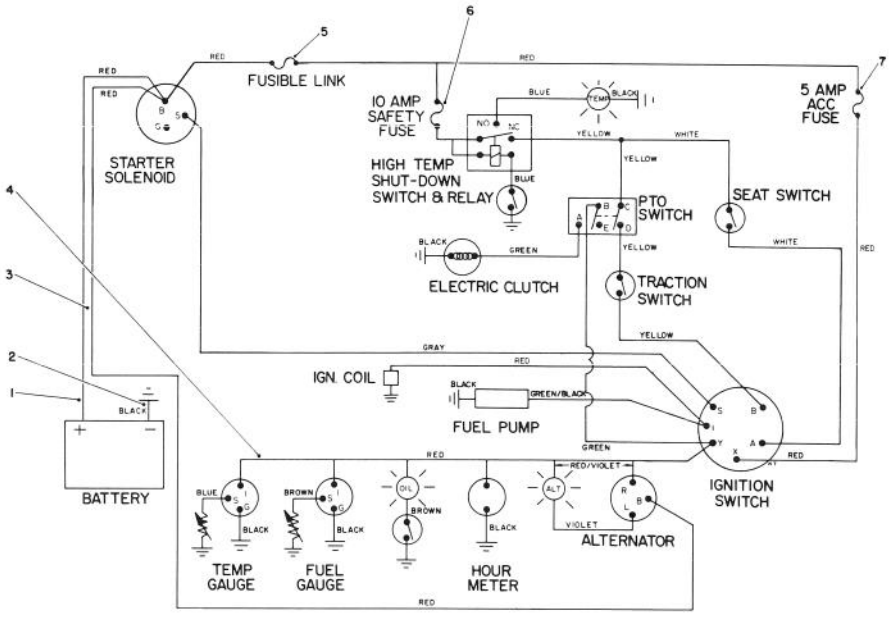

IGNITION SWITCH CIRCUITRY

POSITION	CIRCUIT	"MAKE"
1. OFF	NONE	
2. RUN	B+I+A	X + Y
3. START	B+I+S	

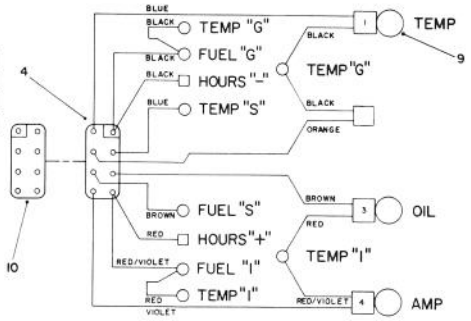

T-0843

ELECTRICAL SCHEMATIC

Ref. No.	Part No.	Description	No. Used
1	43-4031	Wire - Positive	1
2	63-7340	Wire - Ground	1
3	71-3360	Wire Harness (Incl. Ref. #5, 6 & 9))	1
4	66-8690	Lamp Harness (Incl. Ref. #10)	1

Ref. No.	Part No.	Description	No. Used
5	67-7120	Link - Fusible	1
6	218-578	Fue 10.0 Amp	1
7	218-573	Fuse 5.0 Amp	1
9	219-17	Bulb - Light	3
10	68-7380	Assembly - Connector	1

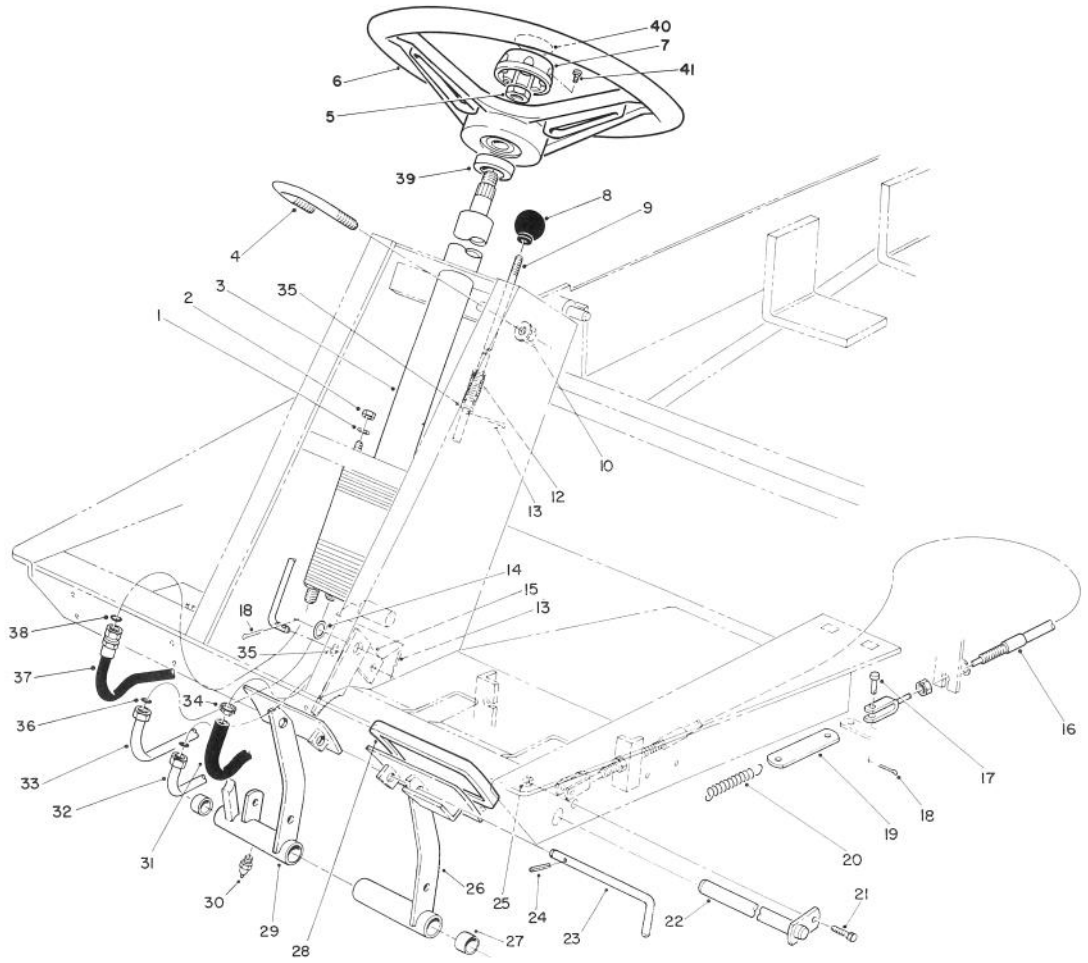

T-1247

POWER STEERING & BRAKE PEDAL ASSEMBLY

Ref. No.	Part No.	Description	No. Used
1	3256-23	Washer - Flat	4
2	3296-20	Nut - Lock	4
3	63-9250	Valve - Power Steering (Incl. Ref. #7)	1
4	54-8970	U-Bolt	1
5	3220-6	Nut - Hex.	1
6	75-0560	Wheel - Steering (Incl. Ref. #7 & 41)	1
7	68-5140	Cap - Steering Wheel (Incl. Ref. #41)	1
8	233-17	Knob	1
9	63-7910	Rod - Brake Latch	1
10	32128-20	Nut - Flange	2
12	3-3251	Spring	1
13	3272-5	Pin - Cotter	3
14	3256-26	Washer - Flat	1
15	63-7900	Rack - Brake	1
16	63-7730	Assy. - Cable, Brake L.H.	1
*	63-7731	Assy. - Cable, Brake R.H.	1
17	283-58	Pin - Clevis	4
18	3272-10	Pin - Cotter	5
19	63-6750	Link - Brake Cable	2
20	3-7243	Spring - Return	2
21	321-3	Screw - Cap Hex. Hd.	1

Ref. No.	Part No.	Description	No. Used
22	63-6210	Pin - Brake	1
23	63-7880	Pin - Brake Latch	1
24	32121-50	Pin - Roll	1
25	3296-42	Nut - Lock	1
26	63-6180	Pedal - L.H. Brake (Incl. Ref. #27 & 30)	1
27	256-42	Bushing	4
28	7-3900	Foot Pad - Brake	2
29	63-6190	Pedal - R.H.Brake (Incl. Ref. #27 & 30)	1
30	302-5	Fitting - Grease	2
31	66-8140	Hose	1
32	66-8630	Tube - Hydraulic (Str.-Lift)	1
33	66-8620	Tube - Hyd. (Pump-Str.)	1
34	2412-36	Clamp	2
35	3256-22	Washer - Flat	3
36	237-30	O-Ring	2
37	66-8170	Hose - Hydraulic	2
*	44-8530	Sock - Hose	1
38	237-22	O-Ring	2
39	21-9260	Cover - Dust	1
40	68-5370	Decal - Toro	1
41	32144-21	Screw - Pan Hd. Phillips	1

*Not Illustrated

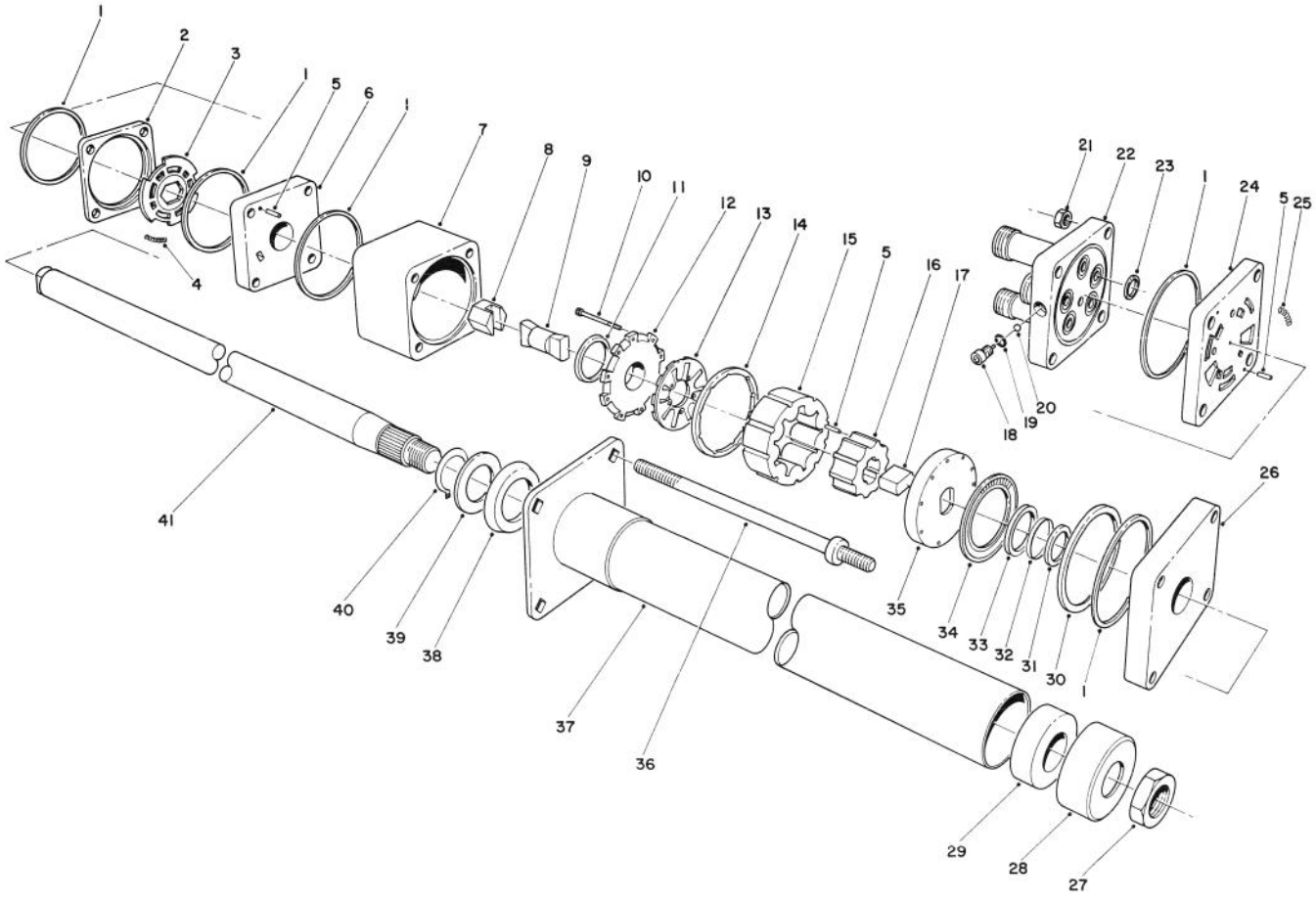

T-0417

STEERING VALVE ASSEMBLY NO. 63-9250

Ref. No.	Part No.	Description	No. Used
1		Ring - Seal	
2		Ring - Valve	
3		Plate - Valve	
4		Spring	3
5		Pin - Alignment	9
6		Manifold - Isolation	1
7		Ring - Metering	1
8		Assembly - Hex. Drive	1
9		Link - Drive	1
10		Screw - Hex. Socket Hd.	11
11		Seal - Commutator	1
12		Cover - Commutator	1
13		Commutator	1
14		Ring - Commutator	1
15		Stator	1
16		Rotor	1
17		Spacer - Drive Link	1
18		Plug	1
19		O-Ring	1
20		Ball	1
21		Nut - Hex.	4
22		Cover - Port	1

Ref. No.	Part No.	Description	No. Used
23		O-Ring	5
24		Manifold - Port	1
25		Spring	3
26		Plate - Upper Cover	1
27	3220-6	Nut	1
28	66-9770	Seal	1
29	66-9780	Bushing	1
30		Spacer - Bearing, Thrust	1
31		Spacer- Seal	1
32		Ring - Backup	1
33		Seal - Face	1
34		Bearing - Thrust	1
35		Plate - Drive	1
36	66-9850	Bolt - Special	4
37	66-9860	Upper Cover & Jacket	1
38	66-9870	Plate - Retaining	1
39	66-9880	Washer - Retaining Plate	1
40	66-9890	Ring - Retaining	1
41	66-9900	Shaft - Input	1
*	66-9970	Kit - Spring	1
*	66-9980	Kit - Seal	1
*	66-9990	Kit - Needle Roller	1

*Not Illustrated

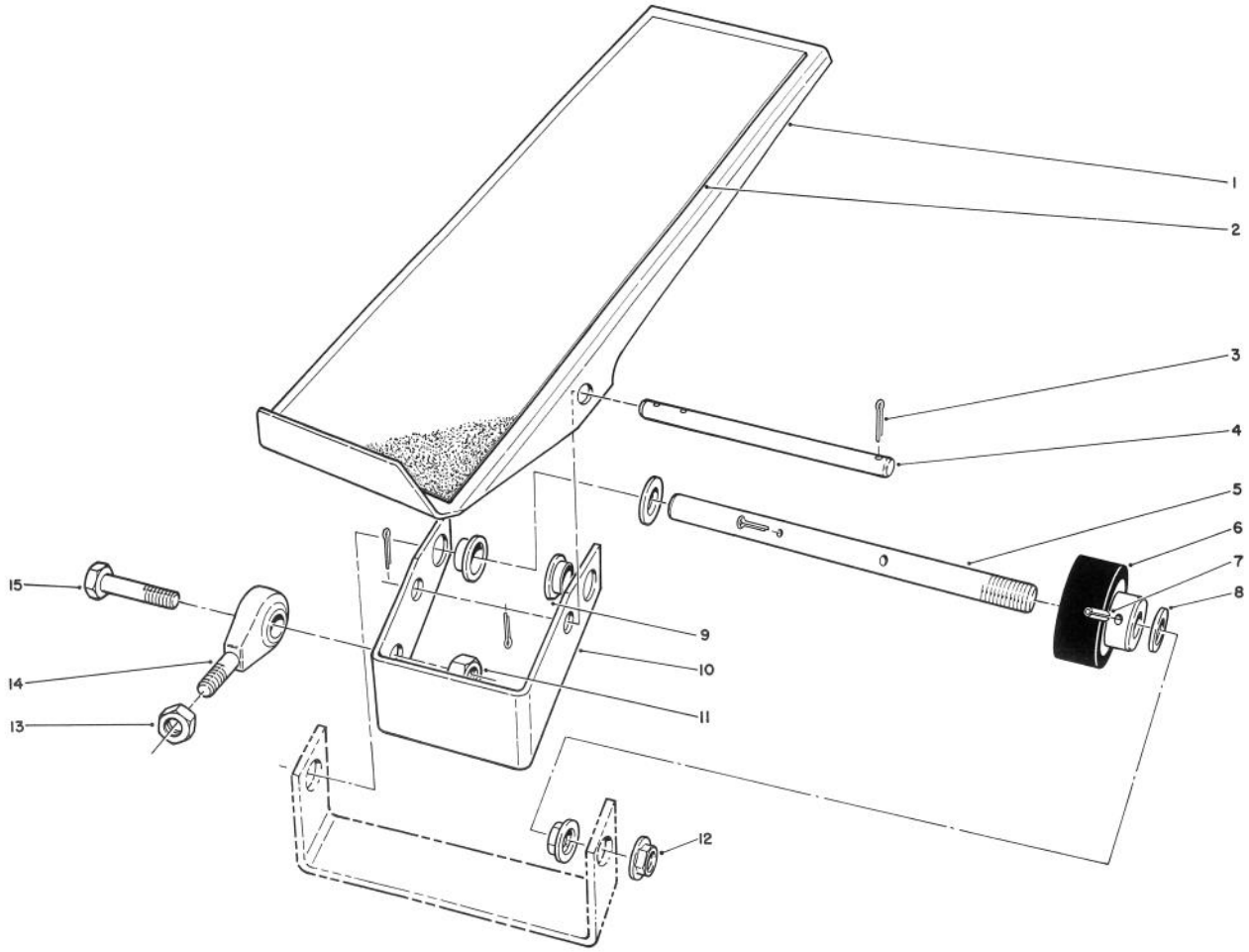

T-1248

TRACTION PEDAL ASSEMBLY

Ref. No.	Part No.	Description	No. Used
1	63-7930	Pedal - Traction	1
2	28-5130	Pad - Traction Pedal	1
3	3272-10	Pin - Cotter	4
4	29-5630	Pin - Pedal, Pivot	1
5	63-6160	Shaft - Traction Pedal	1
6	28-5220	Wheel - Friction	1
7	32121-16	Pin - Roll	1
8	5-7570	Washer	2

Ref. No.	Part No.	Description	No. Used
9	256-156	Bushing - Flange	2
10	63-6170	Assembly - Pivot Bracket (Incl. Ref. #9)	1
11	3296-39	Nut - Lock	1
12	32128-49	Nut - Flange	2
13	3220-3	Nut - Jam	1
14	2411-36	End - Rod	1
15	323-18	Screw - Cap Hex. Hd.	1

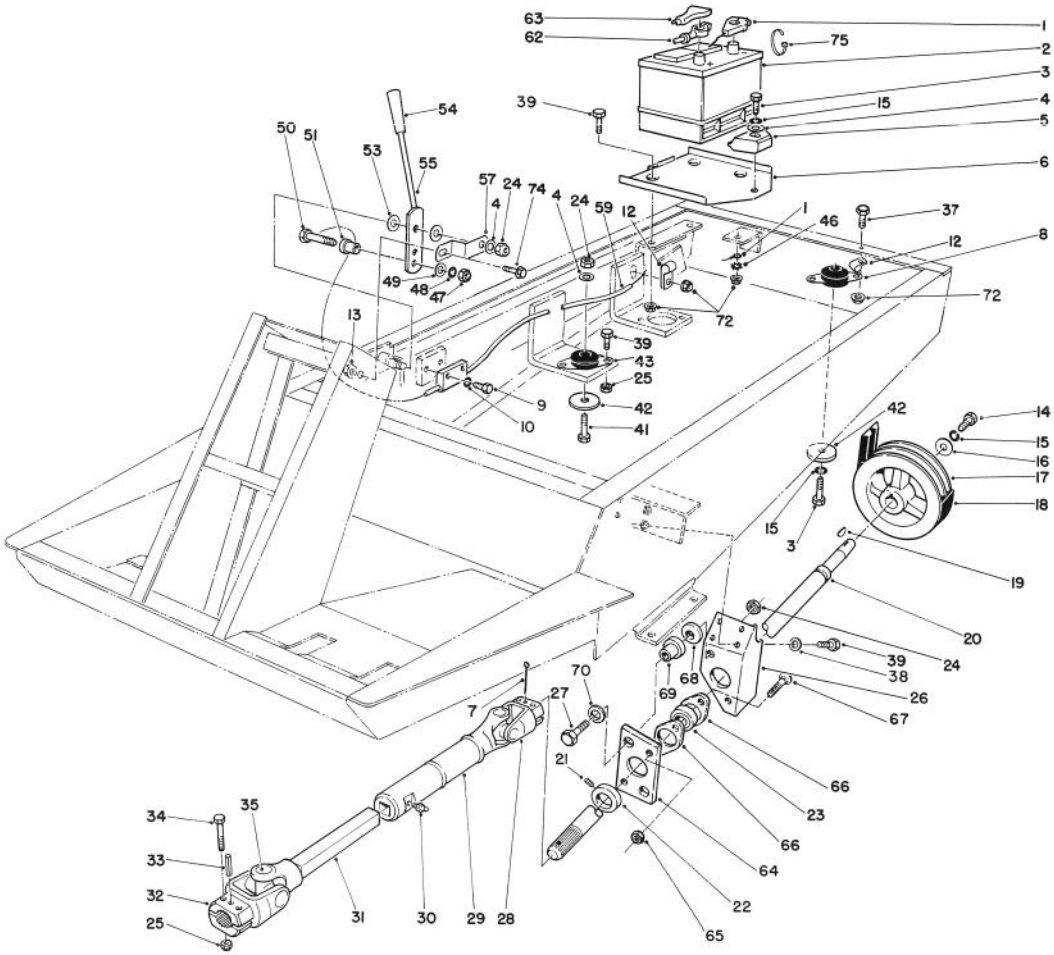

T-1072A

POWER TAKE OFF, BATTERY, AND ENGINE MOUNT ASSEMBLY

Ref. No.	Part No.	Description	No. Used
1	63-7340	Wire - Ground	1
†2		Battery Type 26 SMF-5	1
3	323-9	Screw - Cap Hex. Hd.	2
4	3256-24	Washer - Flat	4
5	66-2490	Clamp - Battery Retainer	1
6	66-2330	Base - Battery	1
7	3272-15	Pin - Cotter	1
8	63-7141	Mount - Shock (Red)	1
9	321-4	Screw - Cap Hex. Hd.	2
10	3253-3	Washer - Lock	2
12	2412-104	R-Clamp	2
13	32128-33	Nut - Flange	1
14	323-18	Screw - Cap Hex. Hd.	1
15	3253-21	Washer - Lock	3
16	29-4730	Washer - PTO	1
17	43-5320	Pulley - PTO	1
18	63-6240	Belt - PTO	1
19	3257-5	Key - Woodruff	1
20	63-6220	Shaft - PTO	1
21	3246-1	Screw - Set	1
22	251-77	Collar - Locking	1
23	251-253	Bearing - PTO Shaft (Incl. Ref. #21 & 22)	1
24	3296-39	Nut - Lock	7

†Obtain Locally

Ref. No.	Part No.	Description	No. Used
25	3296-29	Nut - Lock	12
26	63-6530	Bracket - PTO Bearing	1
27	323-10	Screw - Cap Hex. Hd.	2
28	54-9090	Yoke - End	1
29	54-9170	Tube - Slip Yoke	1
30	302-58	Fitting - Grease	1
31	54-9050	Shaft - Slip Yoke	1
32	54-9040	Yoke - End	1
33	32121-34	Pin - Roll	1
34	322-9	Screw - Cap Hex. Hd.	4
35	54-9180	Kit - Universal Joint	2
37	322-3	Screw - Cap Hex. Hd.	1
38	3253-4	Washer - Lock	4
39	322-5	Screw - Cap Hex. Hd.	15
41	323-11	Screw - Cap Hex. Hd.	3
42	63-7400	Washer - Rebound	4
43	63-7140	Mount - Shock (Blue)	3
46	3255-8	Washer - Lock, Ext. Tooth	1
47		Nut - Hex.	1
48		Washer - Lock, Int. Tooth	1
49		Washer - Flat	1
50		Screw - Special	1
51		Sleeve - Connector	1
53	66-2920	Washer - Friction	2
54	233-39	Knob	1

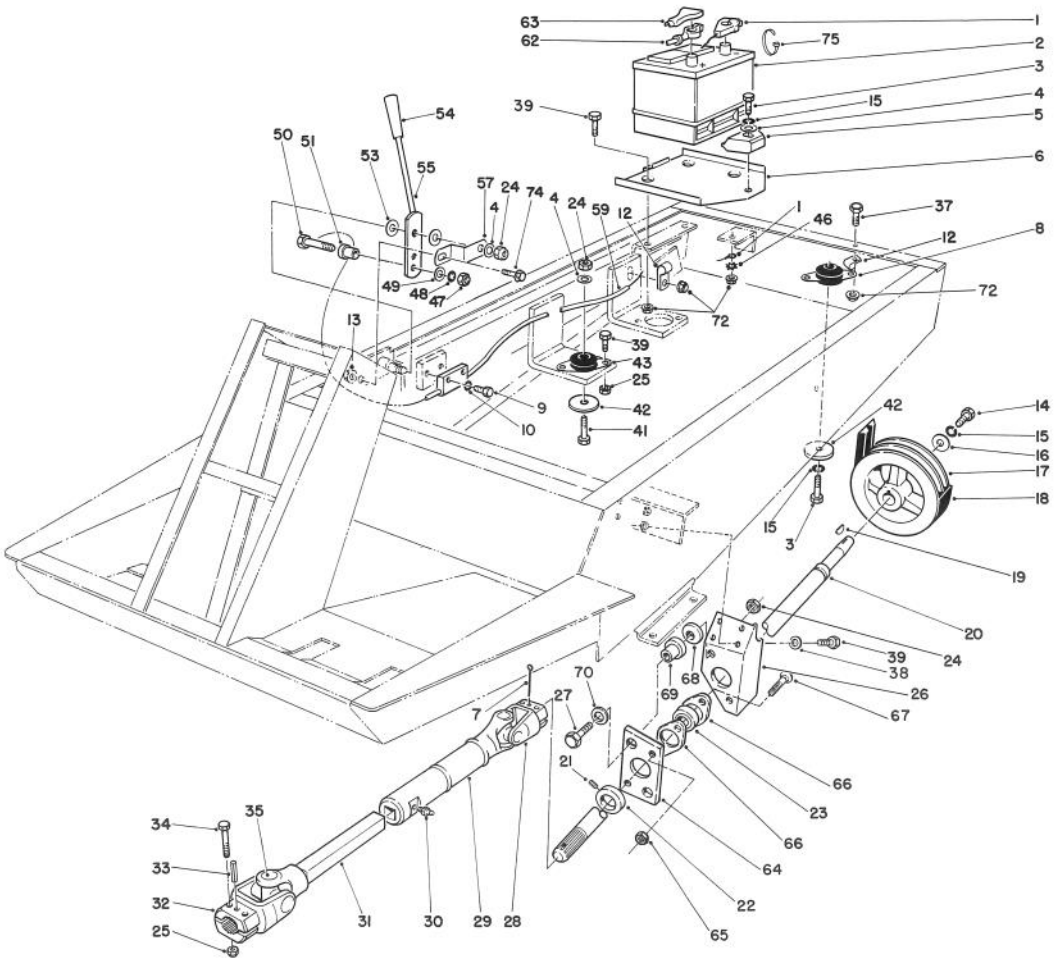

T-1072A

POWER TAKE OFF, BATTERY, AND ENGINE MOUNT ASSEMBLY (Continued)

Ref. No.	Part No.	Description	No. Used
55	71-3500	Lever - Throttle	1
57	66-2670	Bracket - Throttle	1
59	76-1000	Cable - Throttle	1
62	43-4031	Cable - Battery Pos.	1
63	28-1280	Boot - Pos. Cable	1
64	67-1640	Plate - Bushing Support	1
65	32149-1	Nut -Lock	2
66	251-326	Flange - Bearing	2
67	3230-2	Bolt - Carriage	2

Ref. No.	Part No.	Description	No. Used
68	67-1630	Spacer - PTO	2
69	63-9750	Mount	2
70	63-8410	Washer - Flat	2
72	32128-20	Nut - Flange	5
74	3234-13	Screw - Flange	2
75	3290-378	Tie - Cable	1
*	63-6760	Swivel - Throttle Cable (Incl. Ref. #47-51)	1

*Not Illustrated

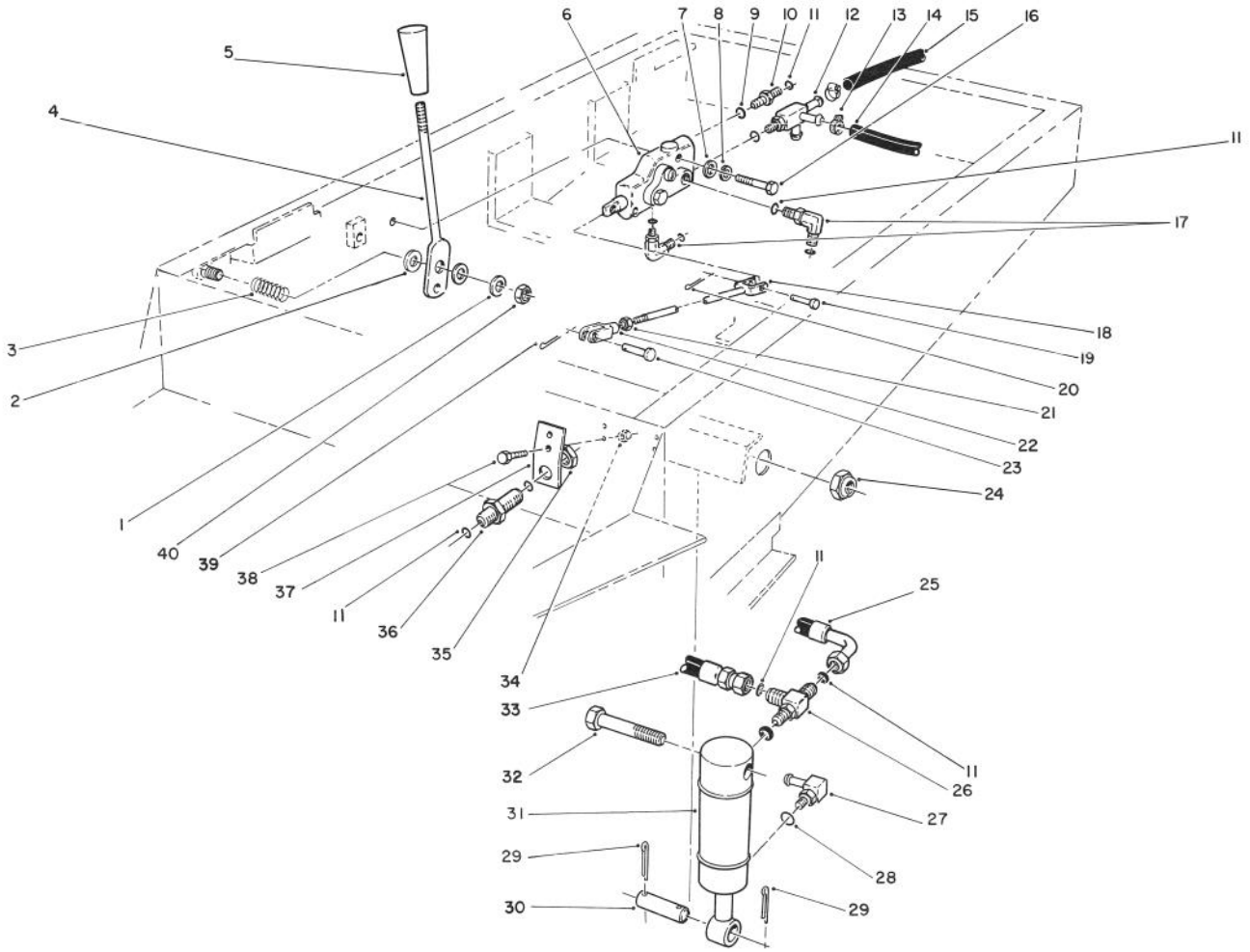

T-0531

HYDRAULIC LIFT SYSTEM ASSEMBLY

Ref. No.	Part No.	Description	No. Used
1	3256-23	Washer - Flat	1
2	3256-26	Washer - Flat	2
3	70-7530	Spring - Compression	1
4	66-2720	Lever - Lift	1
5	233-39	Knob	1
6	63-7960	Valve - Lift	1
7	3256-22	Washer - Flat	2
8	3253-3	Washer - Lock	2
9	237-65	Seal - O-Ring	5
10	340-2	Fitting - Straight (Incl. Ref. #9 & 11)	1
11	237-22	Seal - O-Ring	7
12	66-3130	Fitting - Tee (Incl. Ref. #9)	1
13	2412-36	Clamp - Hose	3
14	66-8150	Hose - Hydraulic	1
15	66-8500	Hose	1
16	321-11	Screw - Cap Hex. Hd.	2
17	340-77	Fitting - 90° Elbow (Incl. Ref. #9 & 11)	2
18	76-4830	Rod - Tie	1
19	283-16	Pin - Clevis	1
20	3272-5	Pin - Cotter	1
21	3220-2	Nut - Jam, R.H.	1
22	282-27	Clevis	1

Ref. No.	Part No.	Description	No. Used
23	283-58	Pin - Clevis	1
24	3296-51	Nut - Lock	2
25	66-8190	Assembly - Hose, Hydraulic	1
26	340-86	Fitting - Tee (Incl. Ref. #9 & 11) (Used On Cap End of Left Cylind.)	1
*	340-77	Fitting - 90° Elbow (Incl. Ref. #9 & 11) (Used On Cap End of Right Cyl.)	1
27	304-99	Fitting - 90° Elbow (Incl. Ref. #28)	2
28	237-22	O-Ring	2
29	3272-23	Pin - Cotter	4
30	27-4240	Pin - Cylinder	2
31	63-6630	Cylinder - Lift	2
32	328-7	Screw - Cap Hex. Hd.	2
33	66-8640	Assembly - Hose, Hydraulic	1
34	3296-42	Nut - Lock	2
35	340-70	Nut - Fitting	1
36	340-71	Fitting - Bulkhead (Incl. Ref. #11 & 35)	1
37	63-7410	Bracket - Bulkhead	1
38	321-4	Screw - Cap Hex. Hd.	2
39	3272-31	Pin - Cotter	1
40	3296-29	Nut - Lock	1

*Not Illustrated

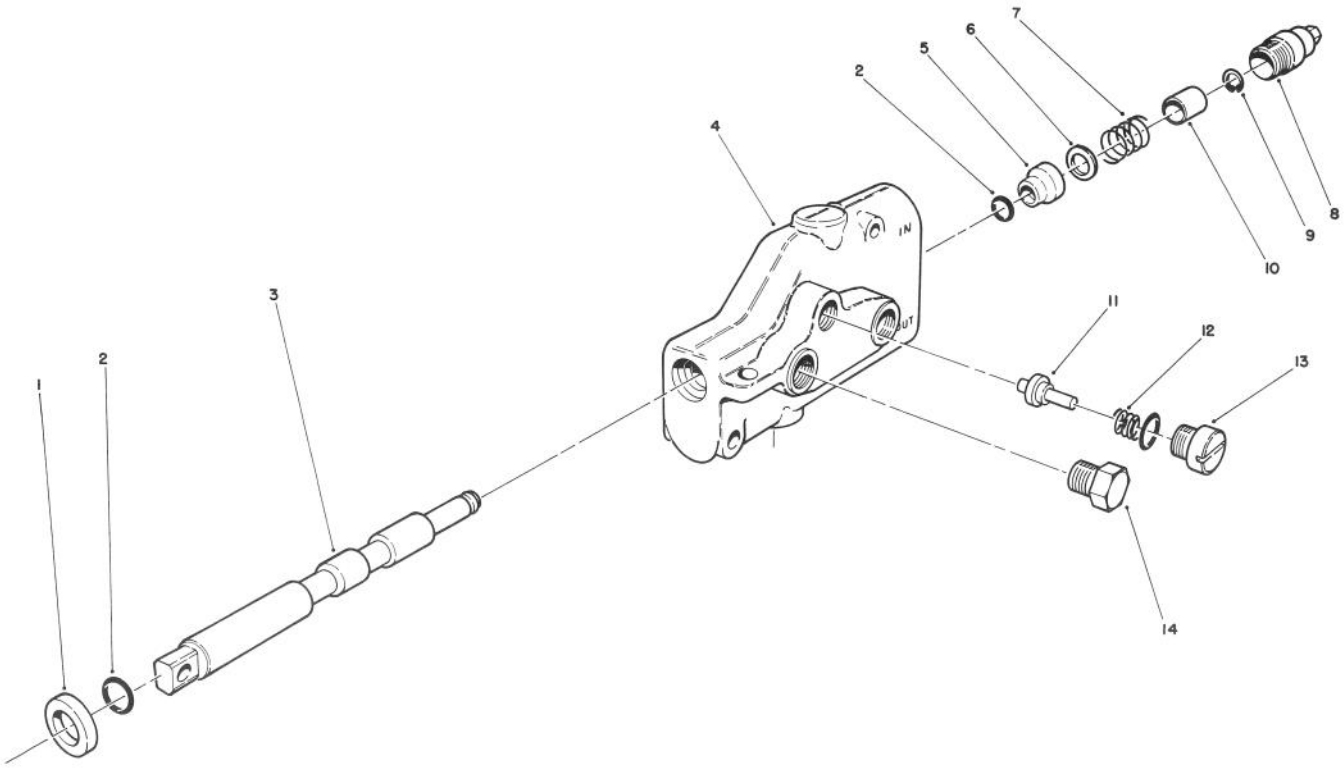

T-0532

LIFT VALVE ASSEMBLY NO. 63-7960

Ref. No.	Part No.	Description	No. Used
1	58-6320	Wiper - Seal	1
2	58-6450	O-Ring	2
3		Spool	1
4		Body	1
5	58-6400	Bushing	1
6	65-2770	Washer	1
7	65-2950	Spring	1
8	58-6420	Assembly - Cap	1

Ref. No.	Part No.	Description	No. Used
9	58-6460	Ring - Retaining	1
10	65-2740	Spacer	1
11	65-2750	Plunger	1
12	65-2760	Spring	1
13	65-2930	Assembly - Plug	1
14	58-6710	Assembly - Plug	1
*	63-7960	Assembly - Lift Valve (Incl. Ref. #3 & 4)	1

*Not Illustrated

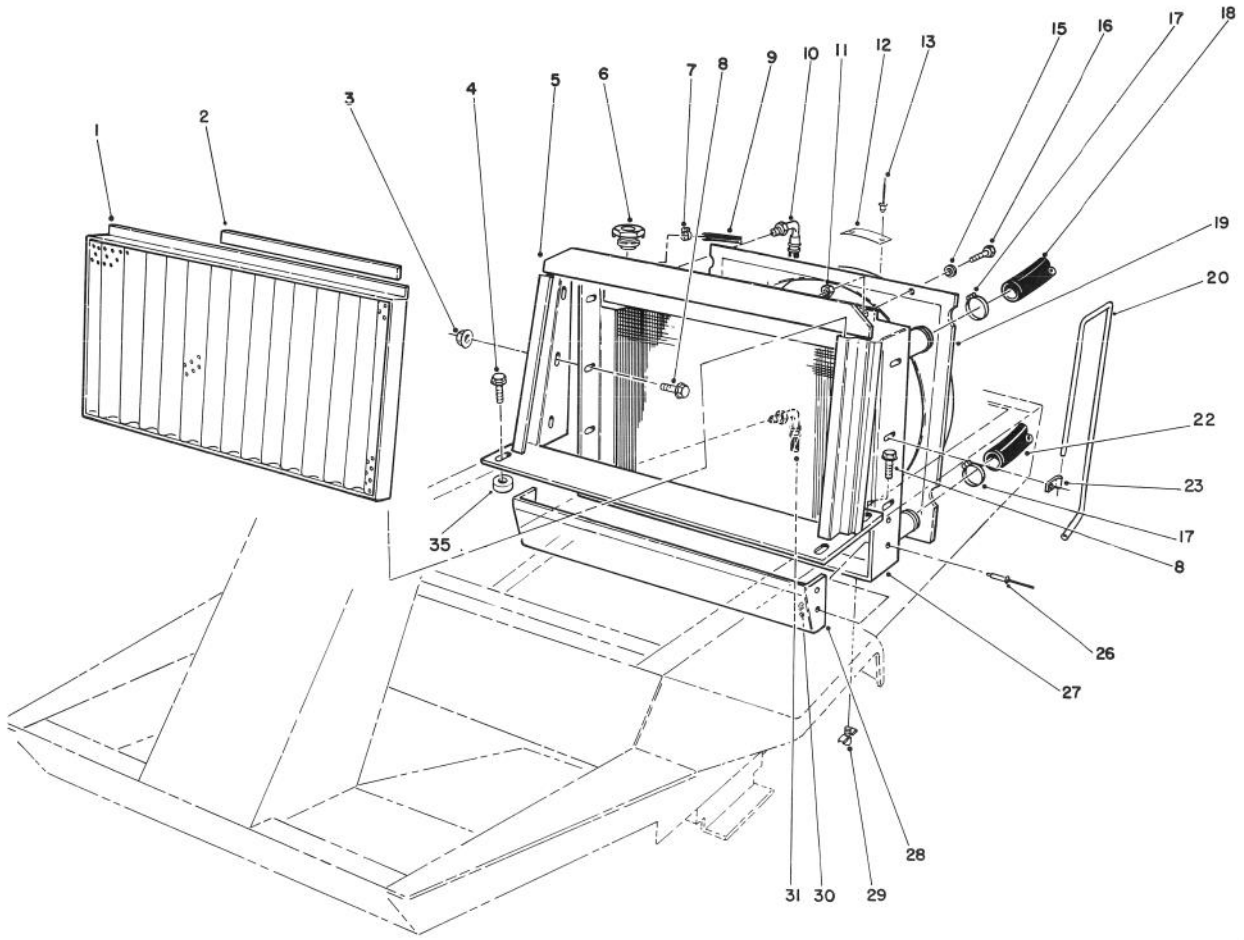

T-0842A

RADIATOR ASSEMBLY

Ref. No.	Part No.	Description	No. Used
1	63-7700	Assembly - Frame, Screen	1
2	63-7710	Magnetic Strip	1
3	32128-20	Nut - Lock, Whiz	6
4	3234-17	Screw - Flange	2
5	63-6450	Assy. - Support, Radiator	1
6	66-3240	Cap - Radiator	1
7	2412-108	Clamp - Hose	2
8	3234-5	Screw - Flange	8
9	71-3384	Hose	1
10	66-8180	Assembly - Hose	1
11	3296-42	Nut - Lock	4
12	76-8750	Plate - Warning	1
13	3290-55	Rivet	2
15	3256-22	Washer - Flat	4

Ref. No.	Part No.	Description	No. Used
16	321-4	Screw - Cap Hex. Hd.	4
17	2412-34	Clamp - Hose	4
18	63-6010	Hose - Upper	1
19	63-6510	Shroud - Fan	1
20	71-1540	Tube - Vent	1
22	63-6020	Hose - Lower	1
23	2412-103	R-Clamp	2
26	3269-8	Rivet	7
27	63-6150	Assembly - Radiator	1
28	63-6440	Shield - Radiator	1
29	304-46	Drain Cock	1
30	3256-13	Washer - Flat	7
31	66-8500	Assembly - Hose	1
35	70-9780	Spacer - Dampen	4

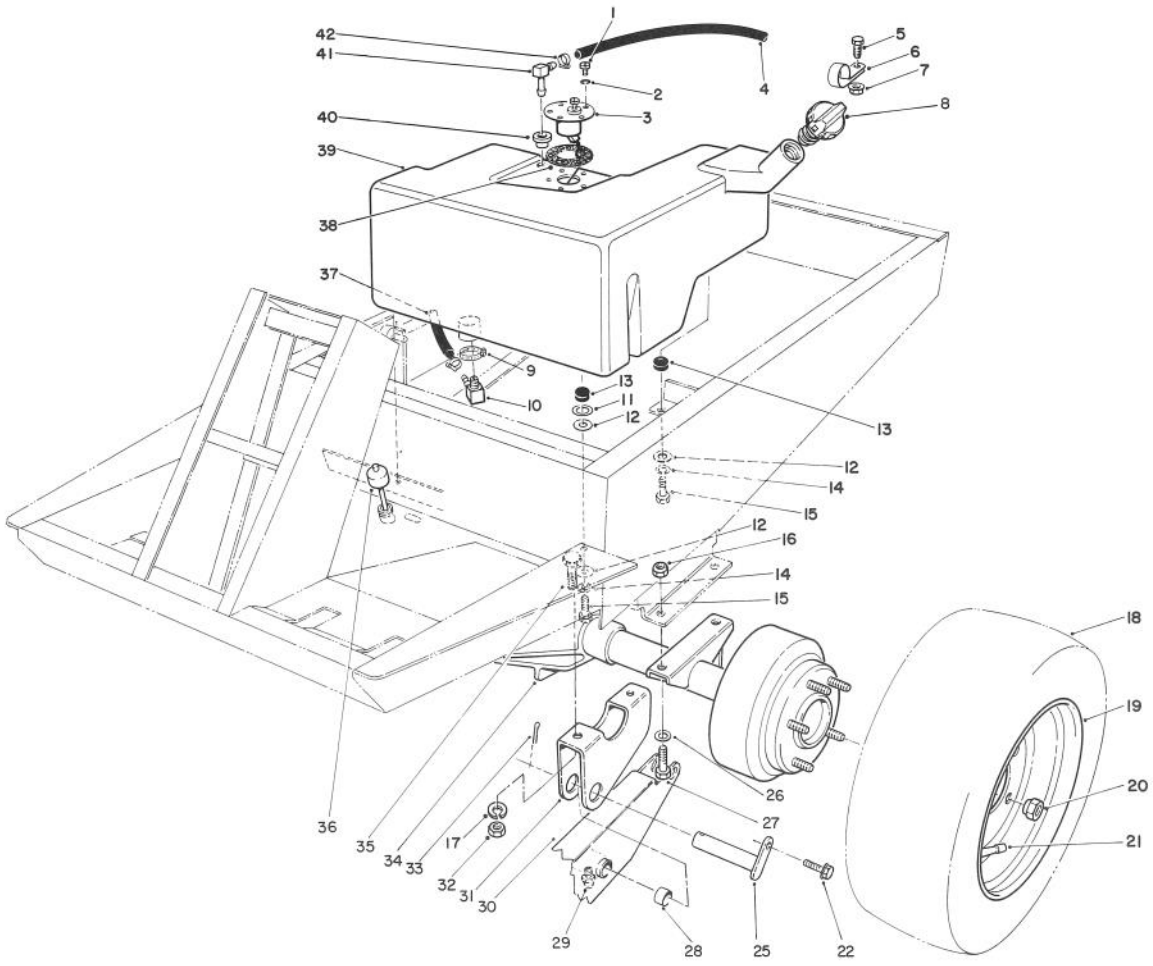

T-0840A

FUEL TANK AND AXLE ASSEMBLY

Ref. No.	Part No.	Description	No. Used
1	32122-24	Screw - Machine	5
2	3253-15	Washer - Lock	5
3	63-7640	Sender - Fuel	1
4	63-7630	Hose	1
5	322-5	Screw - Cap Hex. Hd.	1
6	2412-96	R-Clamp	1
7	32128-20	Nut - Lock	1
8	70-8630	Cap - Fuel	1
9	2412-36	Clamp	1
10	353-536	Fitting - 90°	1
11	3256-26	Washer - Flat	2
12	3256-67	Washer - Flat	3
13	237-136	Grommet	3
14	3253-3	Washer - Lock	3
15	321-5	Screw - Cap Hex. Hd.	3
16	3296-48	Nut - Lock	4
17	3253-8	Washer - Lock	4
18	231-101	Tire	2
19	217-117	Rim	2
20	23-7270	Nut - Lug	10
21	232-31	Valve Stem w/Cap	2
22	3234-13	Screw - Flange Hd.	2

Ref. No.	Part No.	Description	No. Used
25	27-4310	Pin - Pivot	2
26	324-5	Screw - Cap Hex. Hd.	4
27	3256-25	Washer - Flat	4
28	256-101	Bushing	4
29	302-62	Fitting - Grease	2
30	76-3090	Lift Arm - L.H. (Incl. Ref. #28 & 29)	1
*	76-3080	Lift Arm - R.H. (Incl. Ref. #28 & 29)	1
31	67-1830	Carrier Bracket	2
32	3219-6	Nut - Hex.	4
33	3272-17	Pin - Cotter	2
34	70-2740	Assembly - Axle	1
35	3214-5	Screw - Cap Hex. Hd.	4
36	66-3060	Dipstick - Differential	1
37	71-3380	Hose - Fuel	1
38	62-7650	Gasket	1
39	63-7373	Tank - Fuel	1
40	46-6560	Bushing	1
41	46-6550	Connector - 90°	1
42	2412-108	Clamp	4

*Not Illustrated

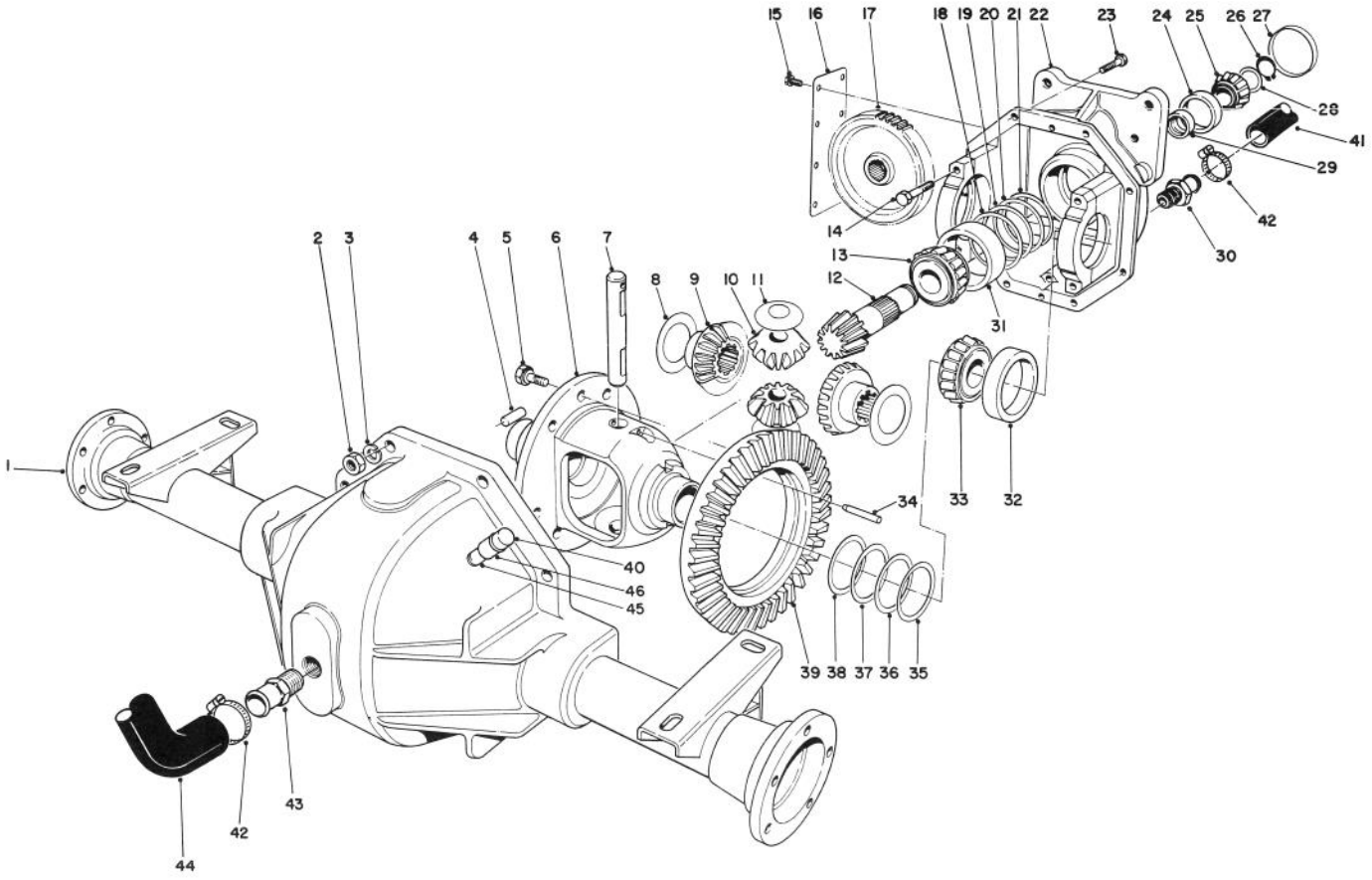

T-0604

DIFFERENTIAL ASSEMBLY

Ref. No.	Part No.	Description	No. Used
1	63-8090	Assembly - Lower Housing	1
2	3219-2	Nut	8
3	3255-8	Washer - Lock	8
4	21-8270	Pin - Dowel	2
5	21-7770	Screw - Drive Gear	5
6	21-7670	Differential Case	1
7	21-7700	Shaft - Pinion Mate	1
8	21-7720	Washer - Thrust	2
9	24-8790	Gear - Bevel, Differential	2
10	21-7690	Gear - Pinion	2
11	21-7730	Washer - Thrust	2
12		Drive Pinion	1
13	43-6760	Cone - Bearjng, Tapered	1
14	324-23	Screw - Cap Hex. Hd.	4
15	12-5450	Screw - Thread Forming	8
16	21-7830	Cover - Gear	1
17	21-8150	Gear - Spur	1
18	43-6710	Shim Adjusting Differential Bearing .003	A/R
19	43-6711	Shim Adjusting Differential Bearing .005	A/R
20	43-6712	Shim Adjusting Differential Bearing .010	A/R
21	43-6713	Shim Adjusting Differential Bearing .030	A/R
22	70-2760	Upper Housing Assembly (Incl. Ref. #14)	1
23	3210-7	Screw - Cap Hex. Hd.	8

Ref. No.	Part No.	Description	No. Used
24	254-90	Cup - Bearing	1
25	254-91	Cone - Bearing	1
26	43-6550	Ring - Retaining	1
27	21-7850	Cap Plug	1
28	46-2210	Shim Front Pinion Bearing (.031)	A/R
*	46-2211	Shim Front Pinion Bearing (.033)	A/R
*	46-2212	Shim Front Pinion Bearing (.035)	A/R
*	46-2213	Shim Front Pinion Bearing (.037)	A/R
*	46-2214	Shim Front Pinion Bearing (.039)	A/R
*	46-2215	Shim Front Pinion Bearing (.041)	A/R
*	46-2216	Shim Front Pinion Bearing (.043)	A/R
*	46-2220	Shim Front Pinion Bearing (.045)	A/R
*	46-2221	Shim Front Pinion Bearing (.047)	A/R
*	46-2222	Shim Front Pinion Bearing (.049)	A/R
*	46-2223	Shim Front Pinion Bearing (.051)	A/R
*	46-2224	Shim Front Pinion Bearing (.053)	A/R

*Not Illustrated

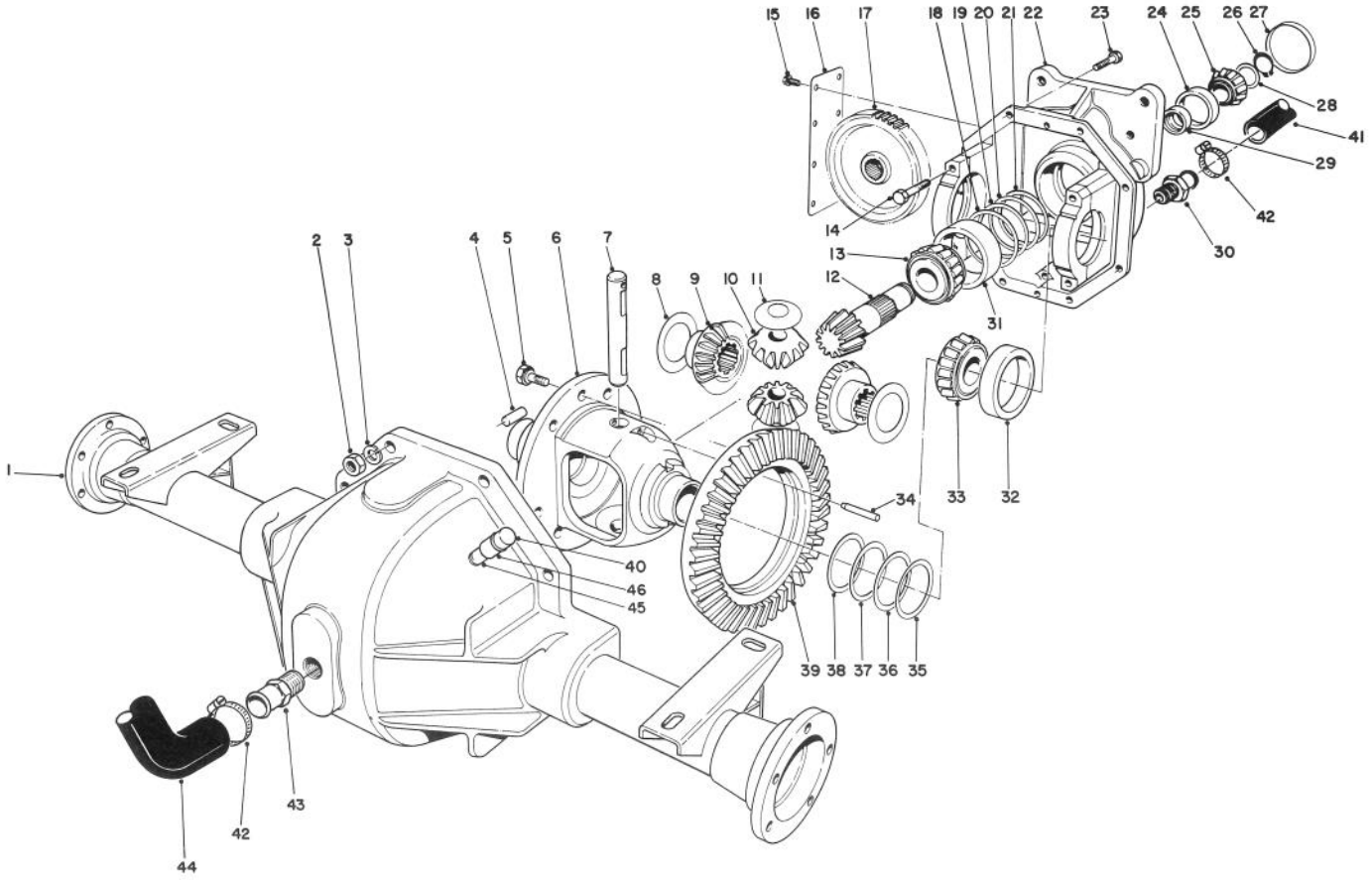

T-0604

DIFFERENTIAL ASSEMBLY (Continued)

Ref. No.	Part No.	Description	No. Used
*	46-2225	Shim Front Pinion Bearing (.055)	A/R
*	46-2226	Shim Front Pinion Bearing (.057)	A/R
*	46-2410	Shim Front Pinion Bearing (.062)	A/R
	46-2411	Shim Front Pinion Bearing (.064)	A/R
*	46-2412	Shim Front Pinion Bearing (.066)	A/R
*	46-2413	Shim Front Pinion Bearing (.068)	A/R
*	46-2414	Shim Front Pinion Bearing (.070)	A/R
*	46-2415	Shim Front Pinion Bearing (.072)	A/R
*	46-2416	Shim Front Pinion Bearing (.074)	A/R
*	46-2420	Shim Front Pinion Bearing (.076)	A/R
	46-2421	Shim Front Pinion Bearing (.078)	A/R
*	46-2422	Shim Front Pinion Bearing (.080)	A/R
*	46-2423	Shim Front Pinion Bearing (.082)	A/R
*	46-2424	Shim Front Pinion Bearing (.084)	A/R
*	46-2425	Shim Front Pinion Bearing (.086)	A/R
*	46-2426	Shim Front Pinion Bearing (.088)	A/R
29	21-8020	Spacer - Frt. Pinion Bearing	1
30	354-18	Fitting - Straight	1
31	43-6750	Cup - Tapered, Bearing	1
32	254-66	Cup - Tapered, Bearing	2
33	254-65	Cone - Tapered, Bearing	2
34	21-7710	Pin - Roll	1
35	21-8090	Differential Adjust. Shim. .003	A/R
36	21-8100	Differential Adjust. Shim. .005	A/R
37	21-8110	Differential Adjust. Shim. .010	A/R
38	21-8120	Differential Adjust. Shim. .030	A/R
39		Gear - Ring	1
40	46-3330	Assembly - Vent	1
41	66-8130	Hose - Hydraulic	1
42	2412-34	Clamp - Hose	4
43	354-71	Pipe Nipple	1
44	77-0550	Tube - Fill	1
	43-6510	Assembly - Gear & Pinion (Incl. Ref. #12 & 39)	1
45	289-6	Nipple - Pipe	1
46	2810-1	Coupler	1

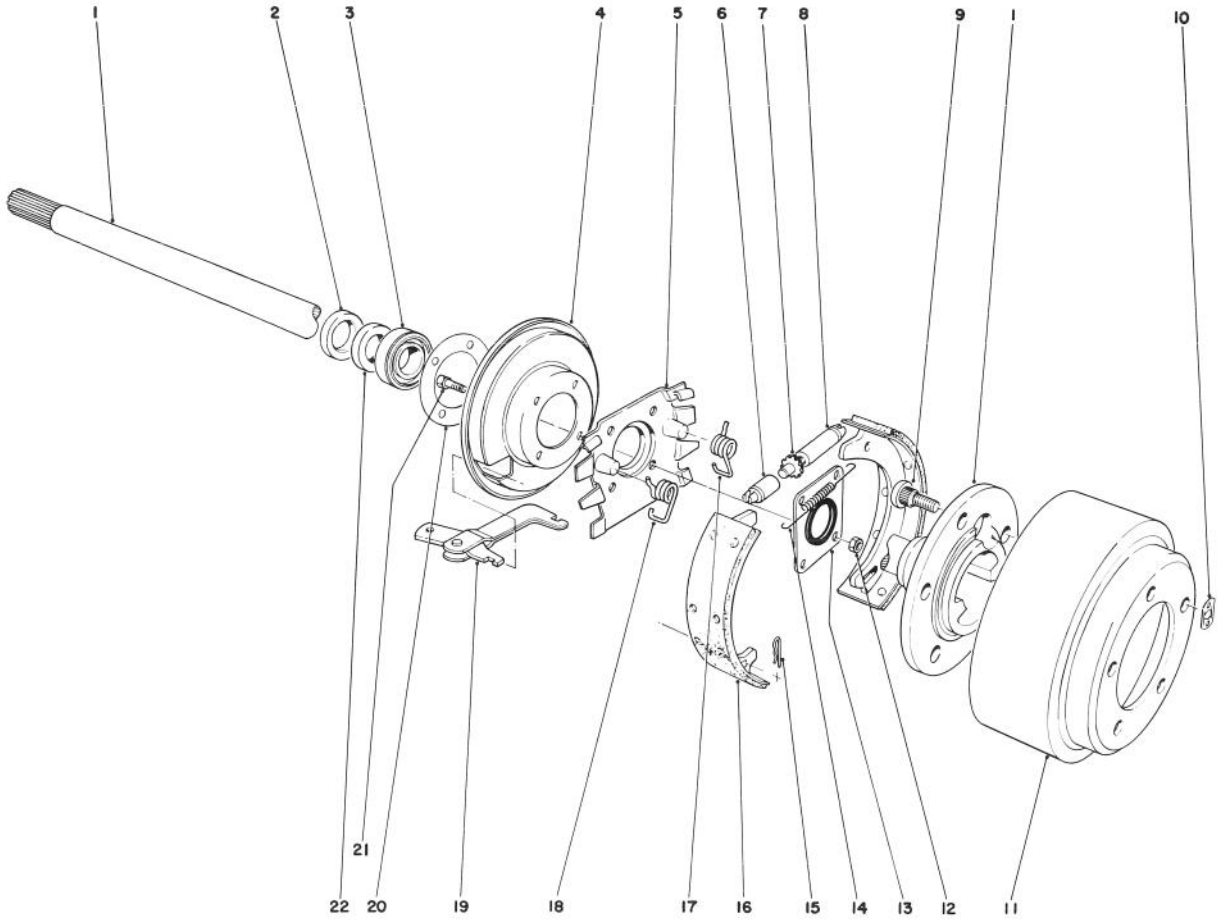

T-0535

BRAKE ASSEMBLY

Ref. No.	Part No.	Description	No. Used
1	27-6861	Shaft - Axle, Flanged L.H.	1
*	27-6851	Shaft - Axle, Flanged R.H.	1
2	21-8330	Oil Seal	2
3	21-8180	Bearing - Tapered Roller	2
4	21-9450	Dust Shield	2
5	43-6810	Torque Spider	2
6	21-9390	Socket - Adjusting Screw	2
7	21-9370	Adjusting Screw	2
8	21-9380	Nut - Pivot	2
9	242-34	Stud - Axle Flange	10
10	21-8360	Clip - Retaining	2
11	28-0680	Brake Drum	2

Ref. No.	Part No.	Description	No. Used
12	43-6800	Nut - Lock, Flange Hd.	8
13	28-0670	Oil Seal	2
14	21-9440	Screw - Spring Adjusting	2
15	21-9460	Retainer - Parking Brake	4
16	43-2690	Assy. - Shoe & Lining	4
17	21-9420	Spring - Shoe Return L.H.	2
18	21 -9430	Spring - Shoe Return R.H.	2
19	24-9180	Strut/Lever - Parking Brake	2
20	21-8320	Gasket - Wheel Bearing	2
21	28-0660	Screw - Cap Hex. Hd.	8
22	24-8840	Ring - Wheel Bearing	2

*Not Illustrated

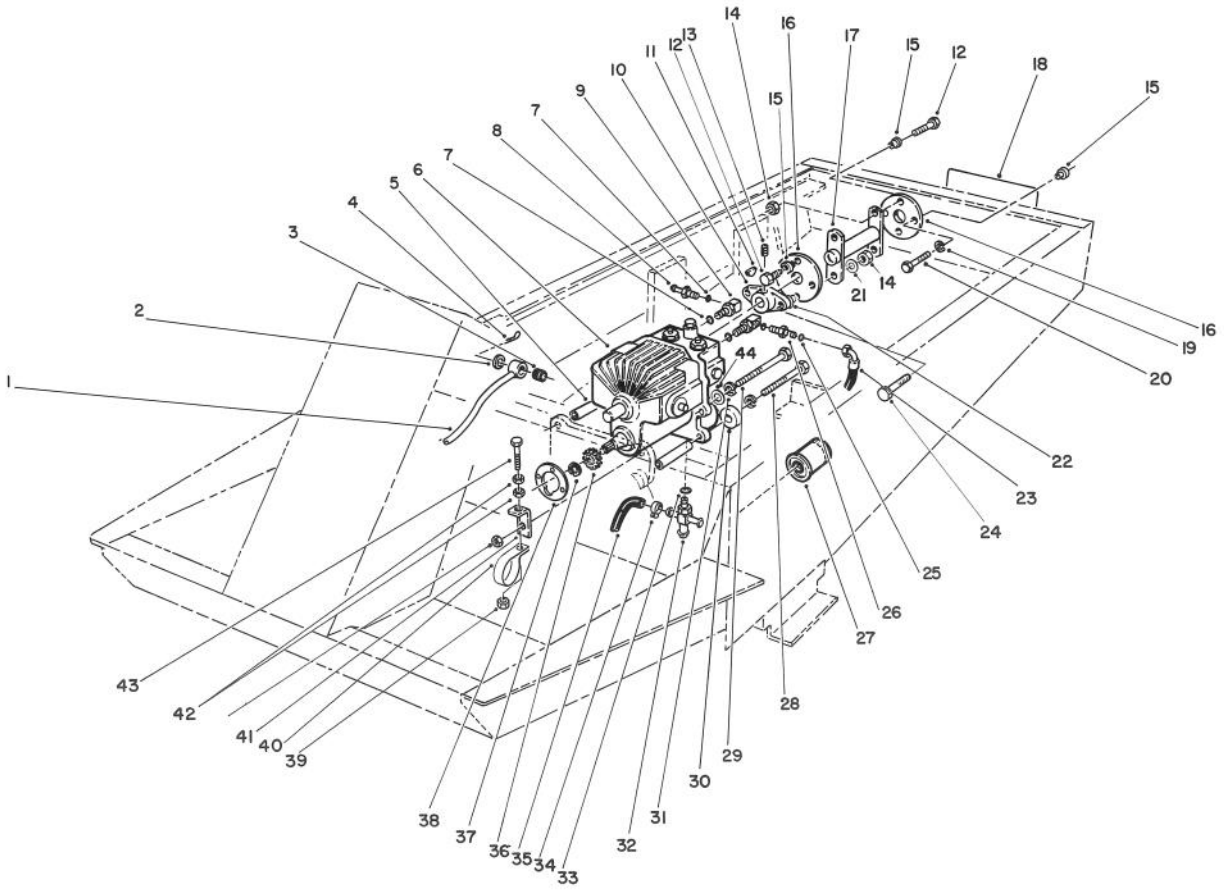

T-0605A

TRANSMISSION & DRIVE COUPLING ASSEMBLY

Ref. No.	Part No.	Description	No. Used
1	63-6410	Tube - Traction Control	1
2	3256-26	Washer - Flat	1
3	23-2270	Bushing - Rubber	1
4	3272-10	Pin - Cotter	1
5	27-3680	Spacer - Mounting	4
6	49-7910	Transmission	1
7	237-42	O-Ring	4
8	353-979	Hose Barb	1
9	66-3110	Hyd. Fitting	2
10	27-4370	Hub - Pump	1
11	3257-5	Key - Woodruff	1
12	3210-5	Screw - Cap Hex. Hd.	4
13	3241-6	Screw - Set	2
14	32152-5	Nut - Lock	6
15	27-6600	Spacer - Rubber	6
16	44-2230	Coupling - Rubber	2
17	63-6610	Drive Shaft	1
18	62-7400	Decal - Toro	1
19	42-9850	Washer - Lock	2
20	66-3160	Screw - Cap Hex. Hd.	2
21	3256-71	Washer - Flat	2
22	27-6590	Spacer	2

Ref. No.	Part No.	Description	No. Used
23	66-8490	Assembly - Hose	1
24	3210-8	Screw - Cap Hex. Hd.	2
25	237-22	O-Ring	1
26	82-8530	Fitting	1
27	23-2300	Oil Filter	1
28	323-39	Screw - Cap Hex. Hd.	3
29	27-9620	Screw - Cap Hex. Hd.	1
30	52-2340	Spacer	1
31	3253-21	Washer - Lock	4
32	66-3120	Hyd. Fitting - Cross	1
33	237-80	O-Ring	1
34	2412-108	Hose Clamp	4
35	66-8160	Hose	2
36	23-4810	Gear - Spur	1
37	32120-72	Ring - Retaining	1
38	27-3690	Gasket - Transmission	1
39	3296-39	Nut - Lock	2
40	2412-4	R-Clamp	1
41	63-7170	Anchor - Transmission	1
42	3218-3	Nut - Jam	2
43	67-1900	Screw - Cap Hex. Hd.	1
44	3256-24	Washer - Flat	1

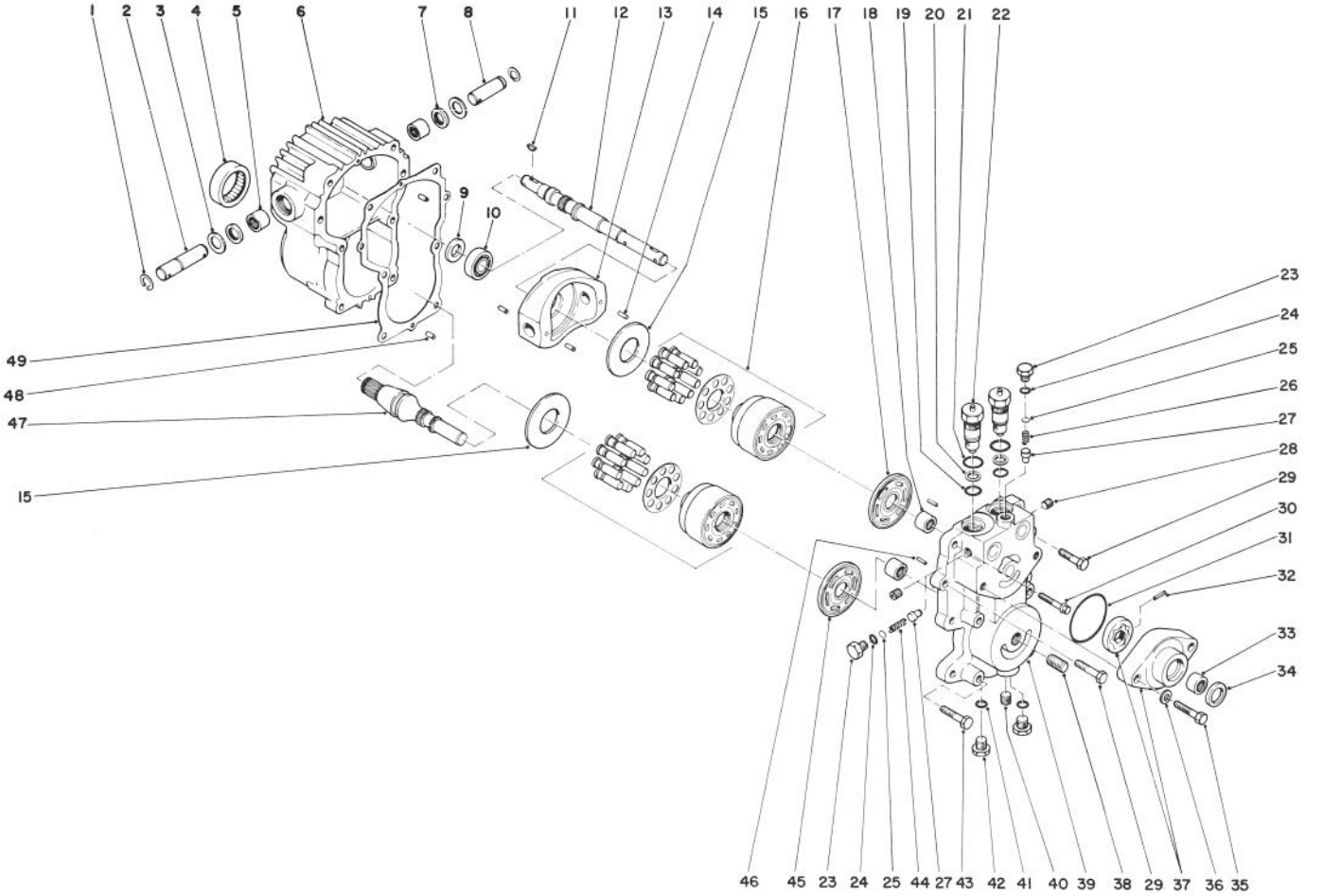

T-0536

TRANSMISSION ASSEMBLY NO. 49-7910

Ref. No.	Part No.	Description	No. Used
1	32151-46	Ring - Retaining	2
2	25-2500	Shaft - Trunion	1
3	25-2510	Washer	2
4	28-3300	Bearing - Roller	1
5	28-3310	Bearing - Needle	2
6	49-7870	Housing	1
7	25-3210	Lip Seal	2
8	28-3670	Shaft - Trunion	1
9	28-3660	Lip Seal	1
10	28-3650	Bearing - Ball	1
11	3257-5	Key - Woodruff	2
12	28-3640	Shaft - Pump	1
13	49-7820	Variable Swashplate	1
14	32121-91	Pin	3
15	25-2380	Plate - Thrust	2
16	48-1800	Kit - Cylinder Block	2
17	46-7320	Plate - Pump Valve	1
18	25-3300	Bearing - Needle	2
19	28-3590	O-Ring	2
20	28-3580	Ring - Backup	2
21	28-3570	O-Ring	2
22	49-7830	Assembly - Check Valve (Incl. Ref. #19-21)	2
23	25-2460	Hex Hd. Plug	2
24	28-3400	O-Ring	2
25	25-2470	Shim Pack	A/R

Ref. No.	Part No.	Description	No. Used
26	46-7310	Relief Valve Spring Imp.	1
27	28-3420	Relief Valve Cone Chg.	2
28	285-17	Plug - Pipe	4
29	323-8	Screw - Cap Hex. Hd.	2
30	28-3530	Screw - Cap Hex. Hd.	2
31	28-3520	O-Ring	1
32	38-2680	Pin	1
33	28-3480	Bearing - Needle	1
34	28-3470	Lip Seal	1
35	324-23	Screw - Cap Hex. Hd.	2
36	28-3450	Washer - Flat	2
37	38-2670	Kit - Charge Pump (Incl. Ref. #31-34)	1
38	25-2660	Union - Filter	1
39	49-7850	Center Section	1
40	46-7280	Plug - Pipe	1
41		O-Ring	2
42	28-3440	Threaded Plug (Incl. Ref. #41)	2
43	323-10	Screw - Cap Hex. Hd.	4
44	25-2480	Relief Valve Spring Chg.	1
45	28-3380	Plate - Motor Valve	1
46	25-2430	Pin	2
47	49-8200	Shaft - Motor	1
48	28-3350	Pin	2
49	28-3340	Gasket	1

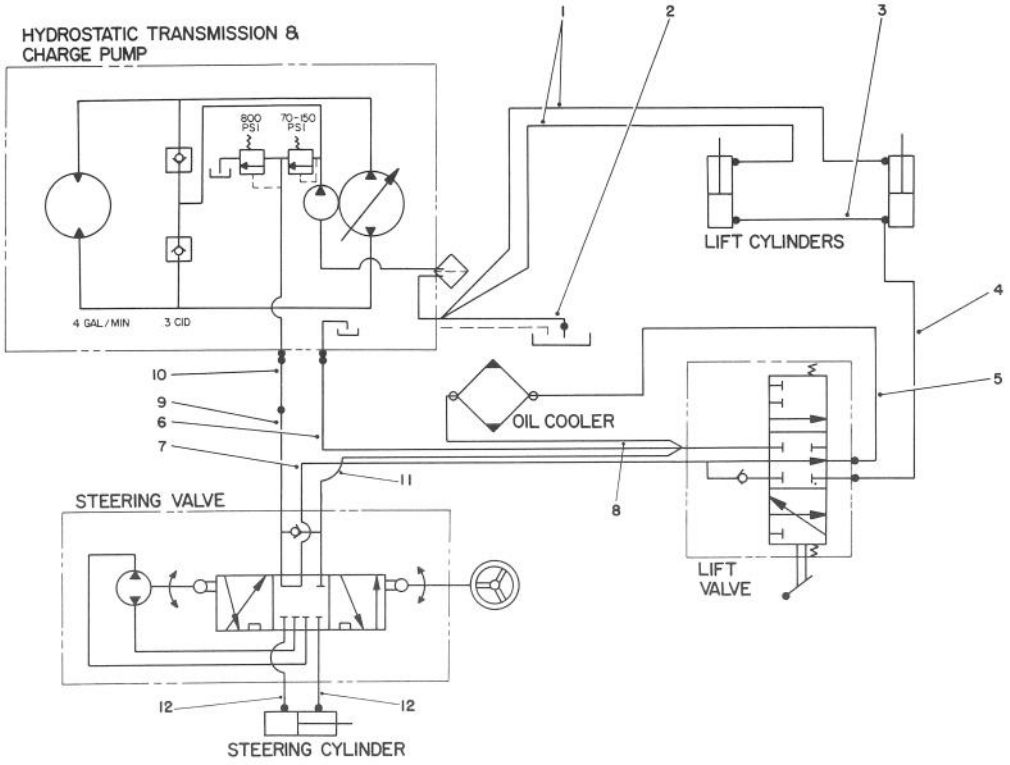

T-0537

HYDRAULIC SCHEMATIC

Ref. No.	Part No.	Description	No. Used
1	66-8160	Hose	2
2	66-8130	Hose	1
3	66-8190	Hose	1
4	66-8640	Hose	1
5	66-8180	Hose	1
6	66-8150	Hose	1

Ref. No.	Part No.	Description	No. Used
7	66-8630	Tube	1
8	66-8500	Hose	1
9	66-8620	Tube	1
10	66-8490	Hose	1
11	66-8140	Hose	1
12	66-8170	Hose	2

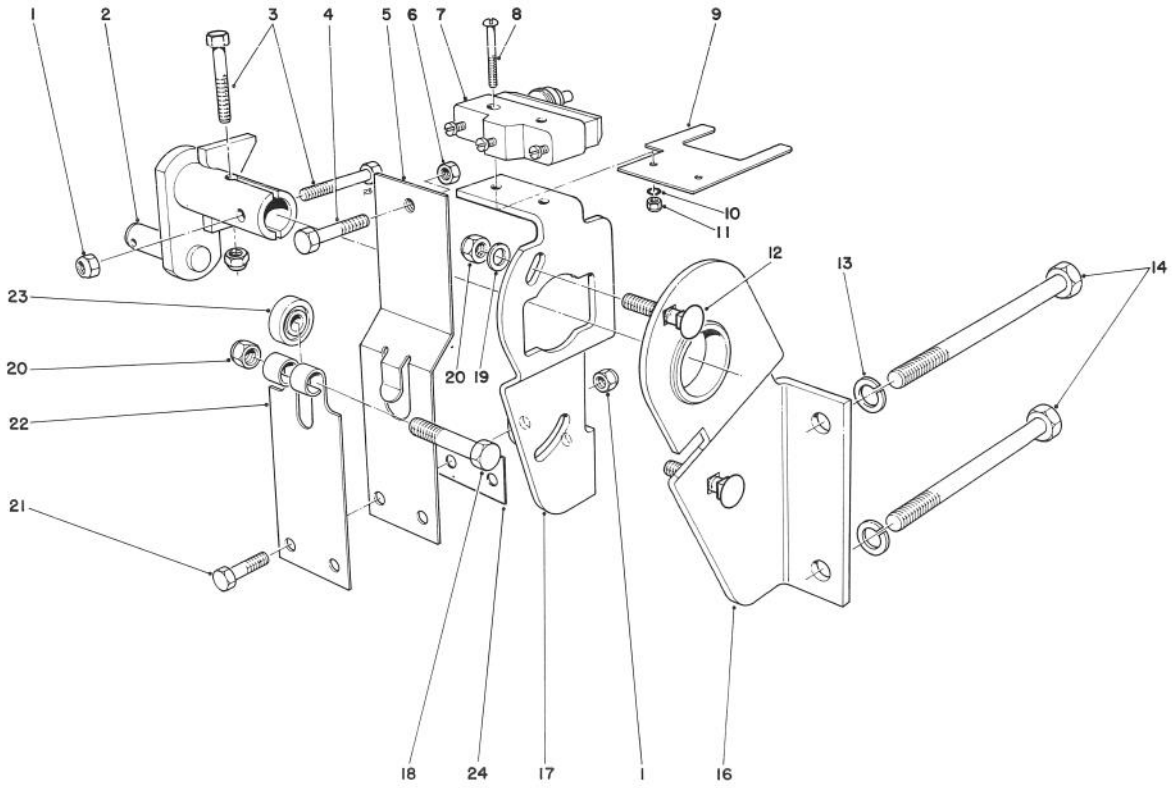

T-0538A

TRANSMISSION INTERLOCK ASSEMBLY

Ref. No.	Part No.	Description	No. Used
1	3296-42	Nut - Lock	4
2	29-9790	Pump - Lever	1
3	321-9	Screw - Cap Hex. Hd.	2
4	3210-7	Screw - Cap Hex. Hd.	1
5	29-6170	Spring - Extended Leaf	1
6	3219-2	Nut - Hex.	1
7	29-6162	Micro Switch	1
8	3249-11	Screw - Round Hd.	2
9	46-8810	Stop - Leaf Spring	1
10	3254-9	Washer - Lock, Int. Tooth	2
11	3217-16	Nut - Hex.	2
12	3230-2	Carriage - Bolt	2

Ref. No.	Part No.	Description	No. Used
13	3253-21	Washer - Lock	2
14	323-39	Screw - Cap Hex. Hd.	2
16	52-8890	Bracket - Mounting	2
17	52-9070	Plate - Pump	1
18	322-17	Screw - Cap Hex. Hd.	1
19	3256-23	Washer - Flat	2
20	3296-29	Nut - Lock	3
21	321-4	Screw - Cap Hex. Hd.	2
22	29-6150	Spring - Leaf	1
23	251-259	Bearing - Ball	1
24	51-3150	Shim	1

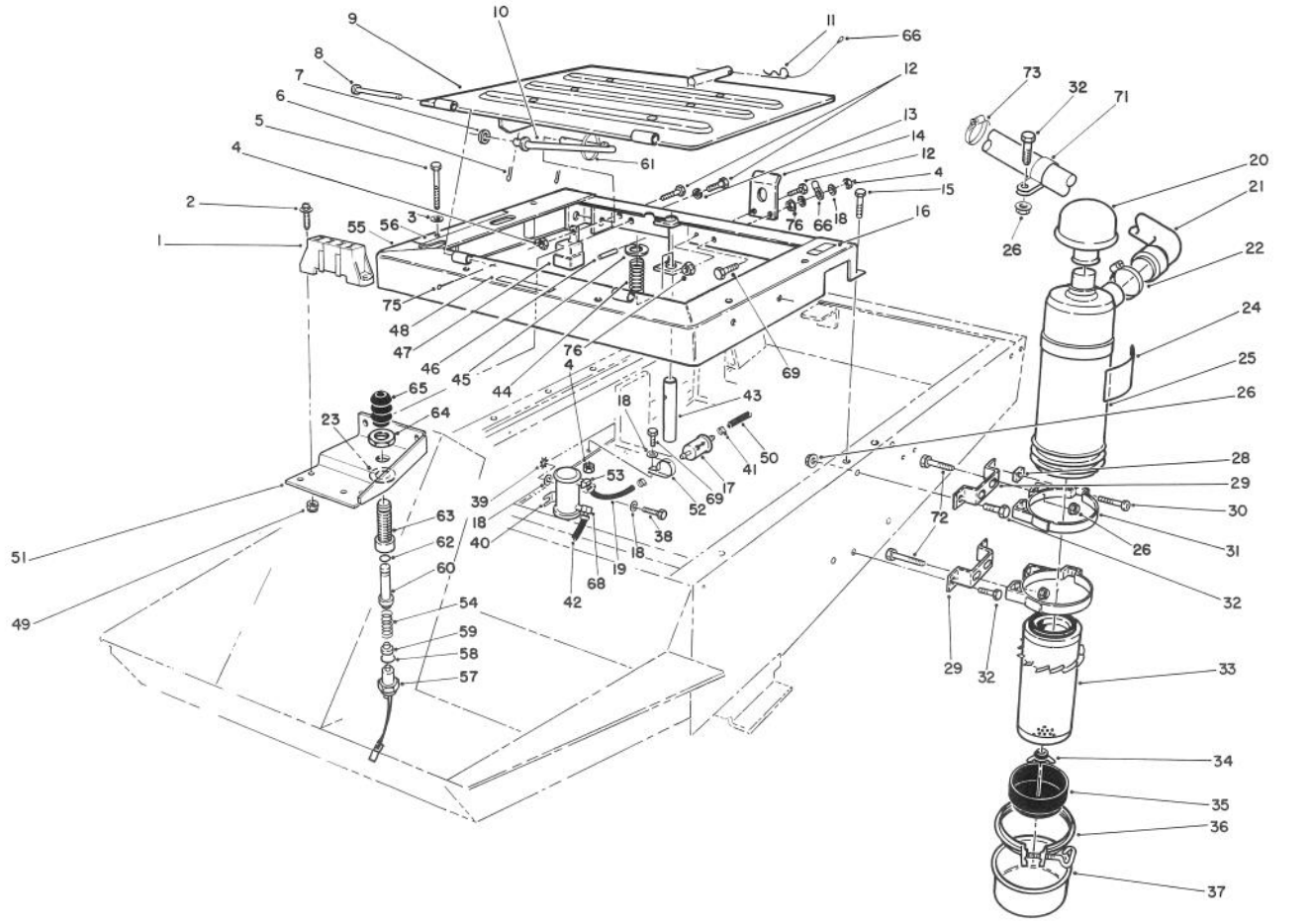

SEAT FRAME & AIR CLEANER ASSEMBLY

Ref. No.	Part No.	Description	No. Used
1	67-7160	Fuse Block	1
2	3290-126	Screw - Cap Hex. Hd.	2
3	3256-70	Washer - Flat	6
4	3296-42	Nut - Lock	6
5	322-33	Screw - Cap Hex. Hd.	6
6	3272-11	Pin - Cotter	2
7	3256-24	Washer - Flat	1
8	283-49	Pin - Clevis	2
9	63-7080	Plate - Seat	1
10	66-2800	Rod - Seat Support	1
11	3290-255	Pin - Hair, Cotter	1
12	321-4	Screw - Cap Hex. Hd.	4
13	3253-3	Washer - Lock	2
14	66-2630	Latch - Seat	1
15	3234-17	Screw - Flange	2
16	71-3730	Decal - Gas	1
17	18-1520	Filter - Fuel	1
18	3256-22	Washer - Flat	7
19	71-3381	Hose	1
20	27-7180	Assembly - Cap	1
21	71-3470	Hose - Air Cleaner Inlet	1
22	2412-42	Clamp - Hose	1
23	3256-69	Washer - Flat	1
24	27-7160	Decal - Instructions	1
25	27-7100	Assembly - Air Cleaner (Incl. Ref. #24 & 32-36)	1

Ref. No.	Part No.	Description	No. Used
26	32128-20	Nut - Flange	9
28	32107-11	Nut - Square	2
29	66-2451	Bracket - Air Cleaner	2
30	3258-19	Screw - Cap Hex. Hd.	2
31	27-7170	Assembly - Mounting Band (Incl. Ref. #28 & 30)	2
32	322-5	Screw - Cap Hex. Hd.	5
33	27-7110	Assembly - Element	1
34	27-7120	Assembly - Nut & Gasket	1
35	27-7140	Skirt - Baffle	1
36	27-7130	Assembly - Clamp	1
37	27-7150	Assembly - Cup	1
38	321-8	Screw - Cap Hex. Hd.	2
39	3255-8	Washer - Lock, Ext. Tooth	1
40	53-8150	Pump - Fuel	1
41	2412-108	Clamp - Hose	4
42	71-3380	Hose	1
43	66-2590	Pin - Seat Spring	1
44	37-9590	Spring - Compression	1
45	3256-27	Washer - Flat	1
46	32121-6	Pin - Roll	1
47	63-7590	Relay	1
48	67-1710	Decal - Interlock	1
49	3296-12	Nut - Lock	2
50	71-3382	Hose - Fuel	1
51	70-7290	Bracket - Seat Switch	1

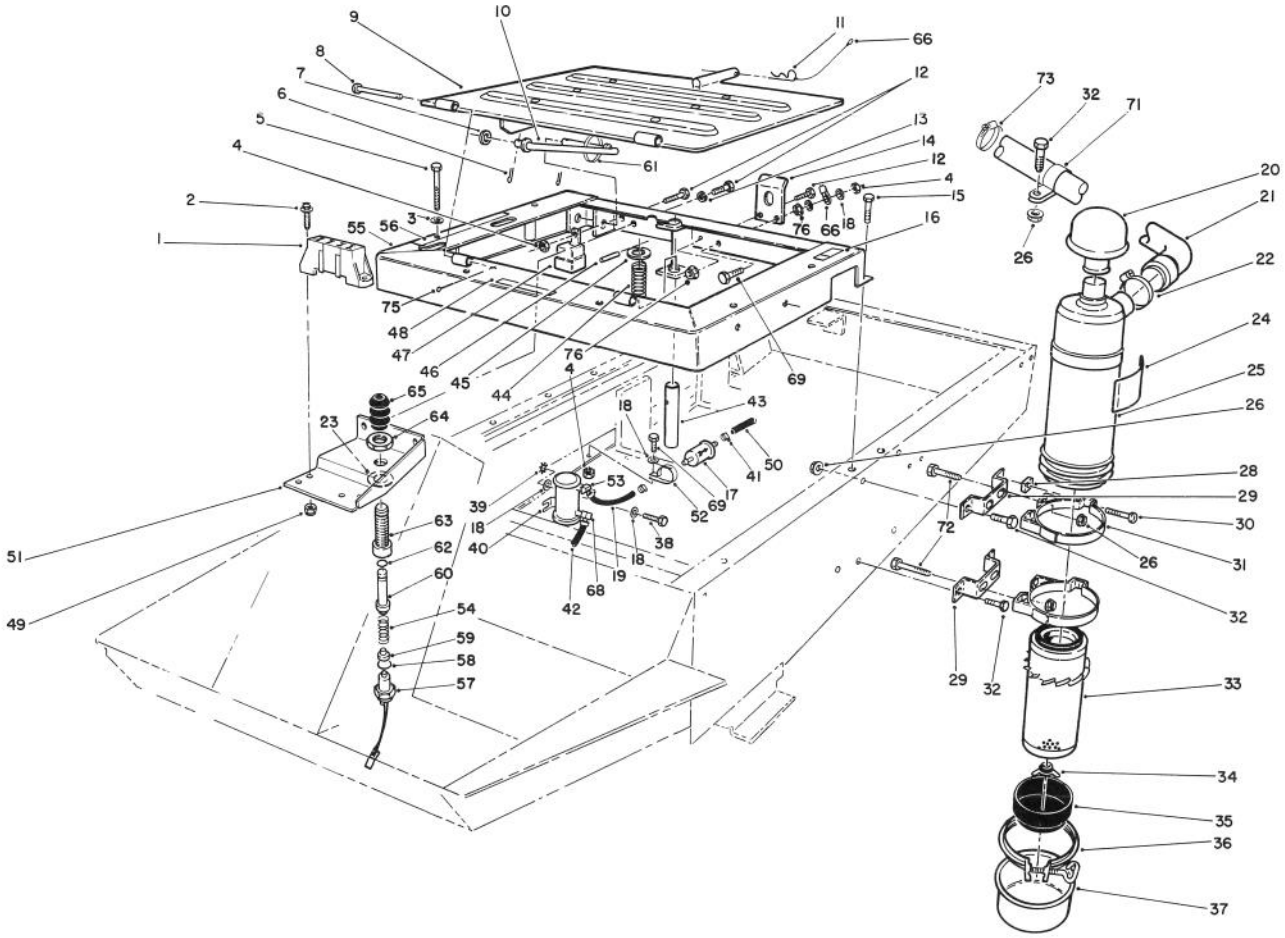

T-0839A

SEAT FRAME & AIR CLEANER ASSEMBLY (Continued)

Ref. No.	Part No.	Description	No. Used
52	2412-96	R-Clamp	1
53	353-705	Fitting - Fuel 45° Barb	1
54	43-8600	Spring - Compression	1
55	63-7290	Frame - Seat	1
56	66-8750	Decal - Control Levers	1
57	72-4320	Switch	1
58	237-30	O-Ring	1
59	43-8610	Guide - Spring & Ball Seat	1
60	43-8860	Plunger - Switch	1
61	3290-378	Tie - Cable	1
62	237-7	O-Ring	1
63	43-8620	Guide - Switch Pin	1
64	218-461	Nut - Jam	1

Ref. No.	Part No.	Description	No. Used
65	43-8870	Boot - Switch	1
66	28-8070	Lanyard	1
68	67-1690	Fitting	1
69	321-6	Screw - Cap Hex. Hd.	2
71	2412-107	R-Clamp	1
72	322-3	Screw - Cap Hex. Hd.	4
73	2412-92	Clamp - Hose	1
75	3272-4	Pin - Cotter	2
76	32128-33	Nut - Flange	2
*	43-9071	Switch - Seat (Incl. Ref. #54, 57-60 & 62-65)	1

*Not Illustrated

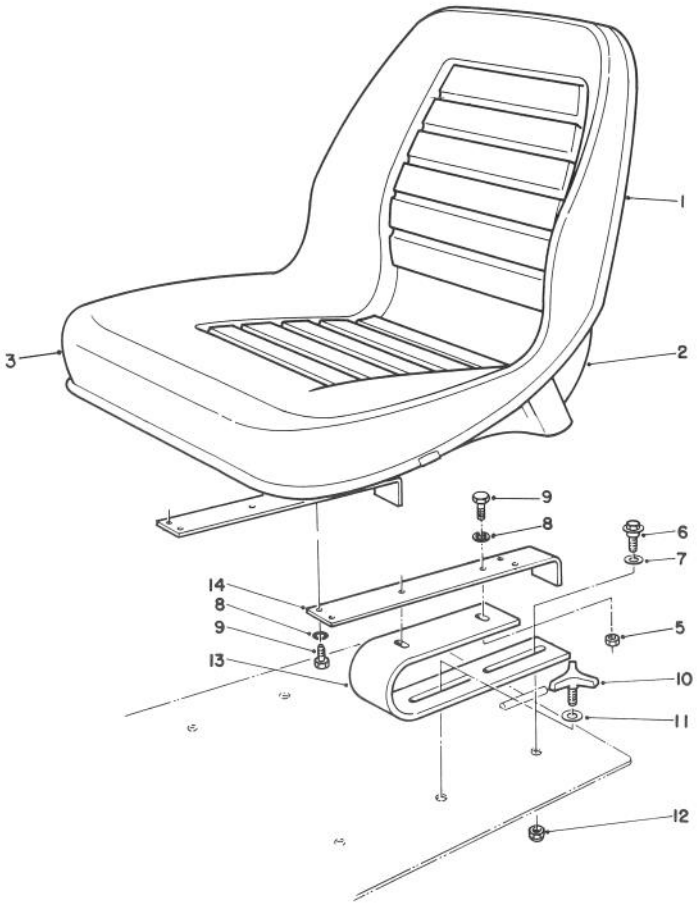

T-0777A

STANDARD SEAT KIT MODEL NO. 30769

Ref. No.	Part No.	Description	No. Used
1	67-9550	Cushion - Seat	1
2	67-9560	Shell - Seat	1
3	66-5400	Assembly - Seat (Incl. Ref. #1 & 2)	1
5	3217-6	Nut - Hex	4
6	27-5240	Bolt - Shoulder	2
7	3256-26	Washer - Flat	2

Ref. No.	Part No.	Description	No. Used
8	3253-4	Washer - Lock	8
9	322-5	Screw - Cap Hex. Hd.	8
10	27-4570	Handle - Adjustment	2
11	36-8020	Washer	2
12	3296-39	Nut - Lock	2
13	46-9110	Spring - Seat	2
14	46-9120	Mount - Seat	2

*Not Illustrated

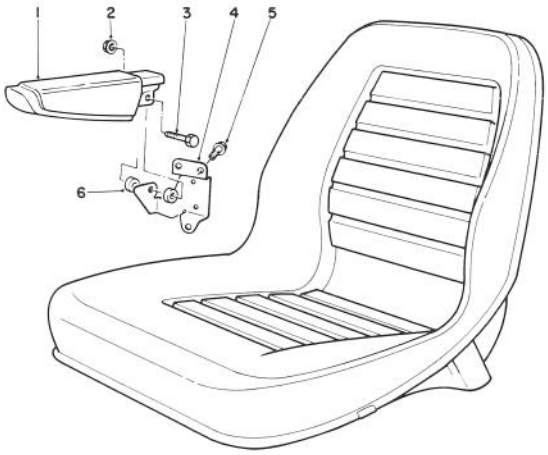

T-0634

ARMREST KIT MODEL NO. 30707

Ref. No.	Part No.	Description	No. Used
1	69-1180	Armrest	2
2	32128-19	Nut - Lock, Flange	2
3	323-9	Screw - Cap Hex. Hd.	2
4	69-0770	Bracket - R.H. Arm	1

Ref. No.	Part No.	Description	No. Used
*	69-0760	Bracket - L.H. Arm	1
5	3234-14	Screw - Cap Hex. Flange	6
6	69-1260	Spacer	4

*Not Illustrated

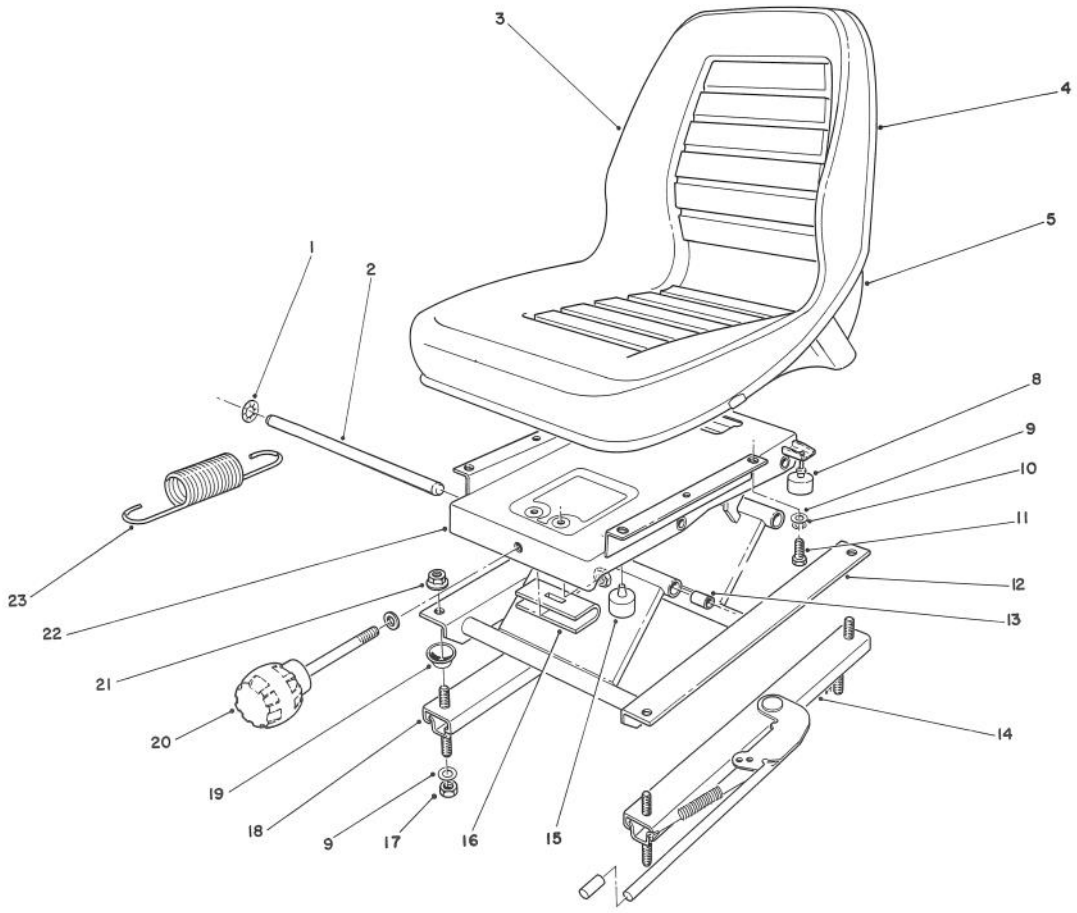

T-0454

DELUXE SEAT KIT MODEL NO. 30772

Ref. No.	Part No.	Description	No. Used
1	66-8560	Nut - Push	4
2	76-1910	Shaft - Pivot	2
3		Cushion - Seat	1
4		Trim - Seat	1
5		Base - Seat	1
8	76-2940	Bumper	2
9	3256-2	Washer - Flat	8
10	3253-4	Washer - Lock	4
11	322-3	Screw - Cap Hex. Hd.	4
12	66-8610	Frame - Lower	1
13	76-1920	Bearing - Sleeve	4
14	66-8510	Adjuster w/Handle	1

Ref. No.	Part No.	Description	No. Used
15	66-8520	Bumper - Stop	2
16	66-8540	Hanger - Spring	1
17	3296-29	Nut - Hex.	4
18	66-8530	Adjuster	1
19	66-9290	Spacer - Suspension	4
20	76-1930	Knob Adjustment	1
21	32128-25	Nut - Lock, Flange	4
22	66-8600	Frame - Upper	1
23	76-1940	Spring - Extension	2
*	66-5400	Assembly - Seat (Incl. Ref. #3 & 5)	1

*Not Illustrated



T-1253

MANUAL STORAGE ASSEMBLY

Ref. No.	Part No.	Description	No. Used
1 0z9z	74-0720	Tube - Manual	1

Ref. No.	Part No.	Description	No. Used
2	2412-133	R-Clamp	2

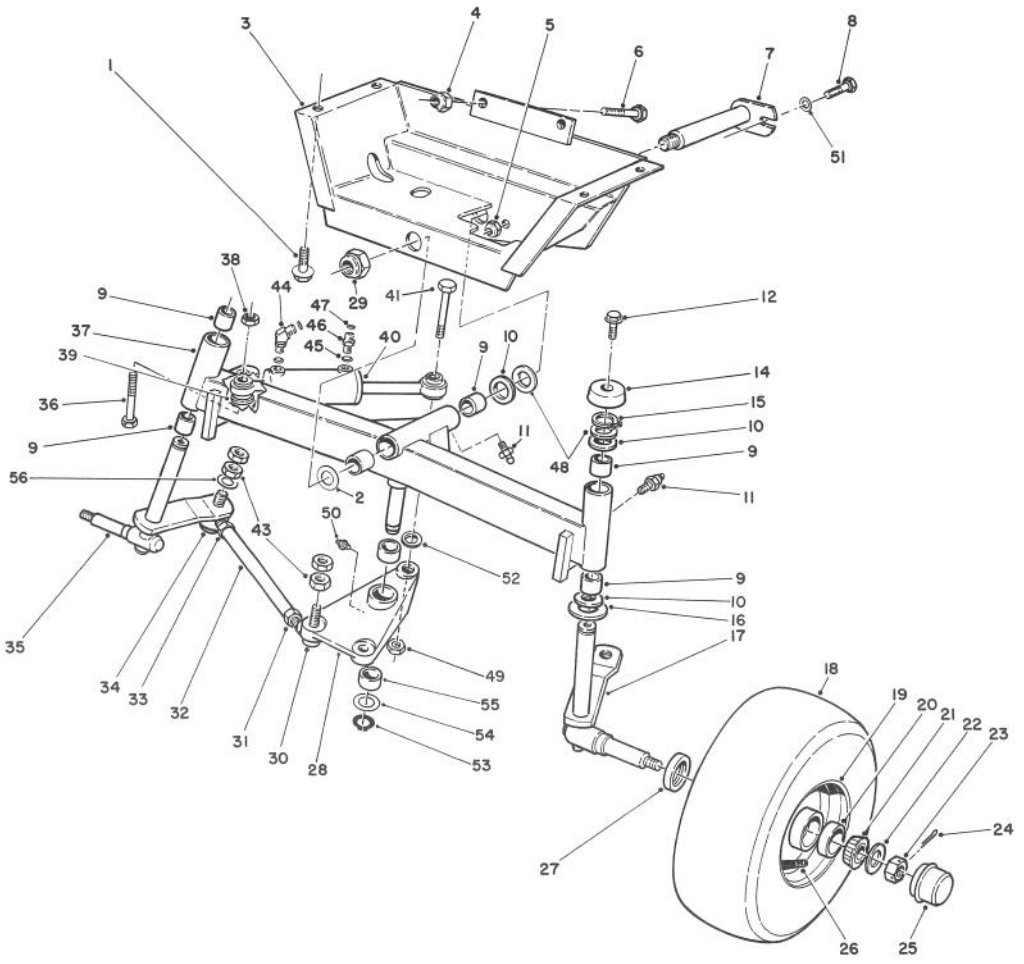

T-0540A

REAR AXLE ASSEMBLY

Ref. No.	Part No.	Description	No. Used
1	3234-25	Screw - Flange	4
2	71-4540	Washer - Thrust	1
3	63-6430	Frame - Rear	1
4	3296-25	Nut - Lock	2
5	3296-42	Nut - Lock	1
6	325-5	Screw - Cap Hex. Hd.	2
7	63-6770	Pin - Rear Axle	1
8	321-4	Screw - Cap Hex. Hd.	1
9	67-1750	Bushing	6
10	10-8110	Washer	5
11	302-5	Fitting - Grease	3
12	3234-13	Screw - Flange Hd.	2
14	66-2990	Cap - Spindle	2
15	32151-36	Ring - Retaining	2
16	256-121	Washer - Thrust	2
17	76-4510	Spindle - Wheel L.H.	1
18	231-105	Tire	2
19	217-118	Rim	2
20	254-72	Cup - Bearing	4
21	254-94	Cone - Bearing	4
22	3256-28	Washer - Flat	2
23	32136-5	Nut - Castle	2
24	3272-13	Pin - Cotter	2
25	241-119	Cap - Hub	2
26	232-35	Stem - Valve	2
27	253-129	Seal - Hub	2
28	76-4810	Pivot - Steering (Incl. Ref. #50 & 55)	1

Ref. No.	Part No.	Description	No. Used
29	3296-51	Nut - Lock	1
30	21-0150	Joint - Ball L.H.	2
31	3220-12	Nut - Jam L.H.	2
32	63-6880	Rod - Tie	2
33	3220-5	Nut - Jam R.H.	2
34	21-0140	Joint - Ball R.H.	2
35	76-4520	Spindle - Wheel R.H.	1
36	67-7300	Screw Hex Hd.	1
37	76-3000	Axle (Incl. Ref. #9 & 11)	1
38	32153-6	Nut - Hex Lock	1
39	67-7250	Spacer Cyl.	1
40	76-2070	Cylinder - Steering	1
41	328-25	Screw - Cap Hex. Hd.	1
43	3220-3	Nut - Jam	8
44	340-103	Fitting - 45° Elbow (Incl. Ref. #45 & 47)	1
45	237-78	Seal - O-Ring	2
46	340-92	Fitting - Straight	1
47	237-21	Seal - O-Ring	2
48	56-2460	Washer - Flat	A/R
49	32128-45	Nut - Lock, Flange	1
50	302-62	Fitting - Grease	1
51	3256-22	Washer - Flat	1
52	67-9410	Washer - Flat	1
53	32121-77	Ring - Retaining	1
54	76-2980	Washer - Thrust	1
55	76-2970	Bushing	2
56	3256-24	Washer - Flat	2

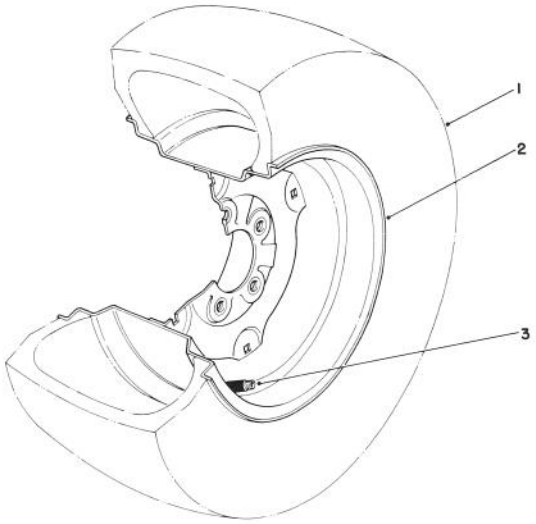

T-0449

TIRE & WHEEL ASSEMBLY 23 X 10.5 X 12 NO. 62-7020 (Optional)

Ref. No.	Part No.	Description	No. Used
1	231-95	Tire	1
2	217-116	Rim	1

Ref. No.	Part No.	Description	No. Used
3	232-27	Valve Stem	1

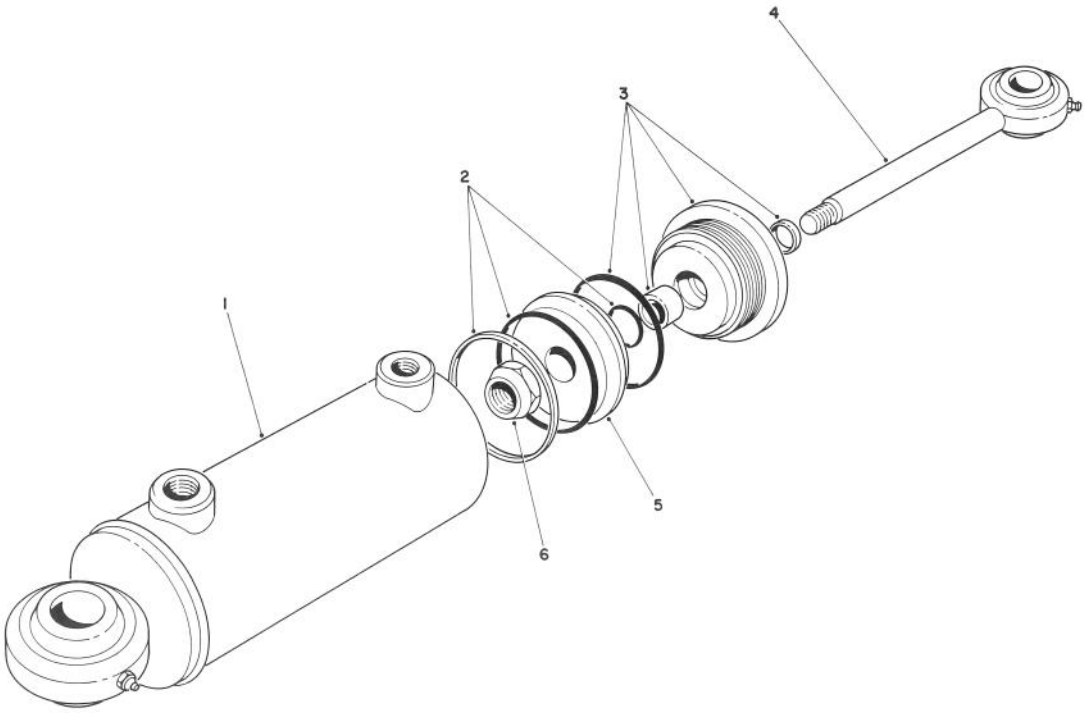

T-0541

HYDRAULIC CYLINDER NO. 76-2070

Ref. No.	Part No.	Description	No. Used
1	66-2770	Tube - Cylinder	1
2	76-2090	Kit - Seal	1
3	76-2790	Kit - Gland	1

Ref. No.	Part No.	Description	No. Used
4	76-2080	Assembly - Piston Rod	1
5	66-1940	Piston	1
6	66-1930	Nut - Lock	1

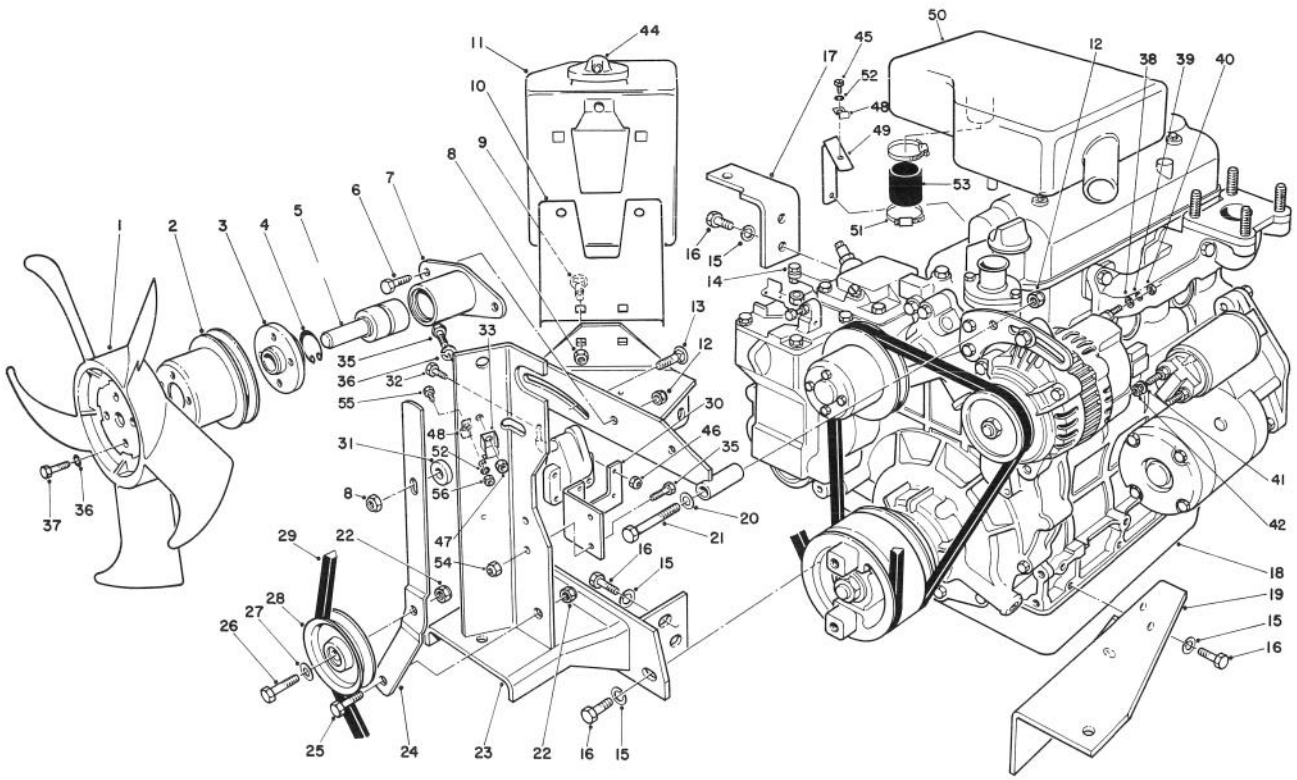

T-0838

ENGINE ASSEMBLY

Ref. No.	Part No.	Description	No. Used
1	43-1910	Fan - Cooling	1
2	42-9070	Pulley - Fan	1
3	53-8680	Hub - Fan	1
4	32120-10	Ring - Retaining	1
5	36-7290	Shaft w/Bearing	1
6	322-4	Screw - Cap Hex. Hd.	2
7	66-2390	Hub	1
8	32128-20	Nut - Flange	3
9	3230-23	Bolt - Carriage	2
10	66-2440	Plate - Reservoir	1
11	63-7380	Tank - Expansion (Incl. Ref. #44)	1
12	3296-29	Nut - Lock	3
13	3230-2	Bolt - Carriage	1
14	63-6760	Swivel - Cable, Throttle	1
15	48-9590	Washer - Lock	8
16	63-7790	Screw	8
17	71-2910	Angle - Mount, Engine	1
18	68-9960	Engine	1
19	66-2320	Mount - Engine	1
20	3256-23	Washer - Flat	1
21	322-11	Screw - Cap Hex. Hd.	1
22	3296-39	Nut - Lock	2
23	71-1450	Bracket	1
24	63-6720	Lever - Idler	1
25	323-6	Screw - Cap Hex. Hd.	1
26	323-8	Screw - Cap Hex. Hd.	1
27	3256-24	Washer - Flat	1

Ref. No.	Part No.	Description	No. Used
28	63-8140	Pulley	1
29	63-7130	Belt - Fan	1
30	71-2980	Bracket - Coil	1
31	52-2340	Spacer	1
32	3290-360	Screw - Cap Hex. Hd.	4
33	3-6657	Clip - Skid	1
35	321-4	Screw - Cap Hex. Hd.	3
36	3253-3	Washer - Lock	5
37	321-3	Screw - Cap Hex. Hd.	4
38	5-3637	Washer - Flat	1
39	43-5920	Washer - Lock	1
40	43-5970	Nut - Hex.	1
41	42-9850	Washer - Lock	2
42	57-6390	Nut - Hex.	2
44	71-1520	Cap - Reservoir	1
45	32105-8	Screw	2
46	3296-2	Nut - Lock	4
47	3217-5	Nut - Hex.	1
48	2412-92	Clamp	2
49	71-1460	Bracket - Clamp	1
50	71-2901	Chamber- Induction	1
51	2412-92	Clamp	2
52	3253-2	Washer - Lock	2
53	71-3530	Hose - Carburetor	1
54	3296-42	Nut -Lock	2
55	32105-13	Screw - Cap Hex. Hd.	1
56	3217-26	Nut - Hex.	1

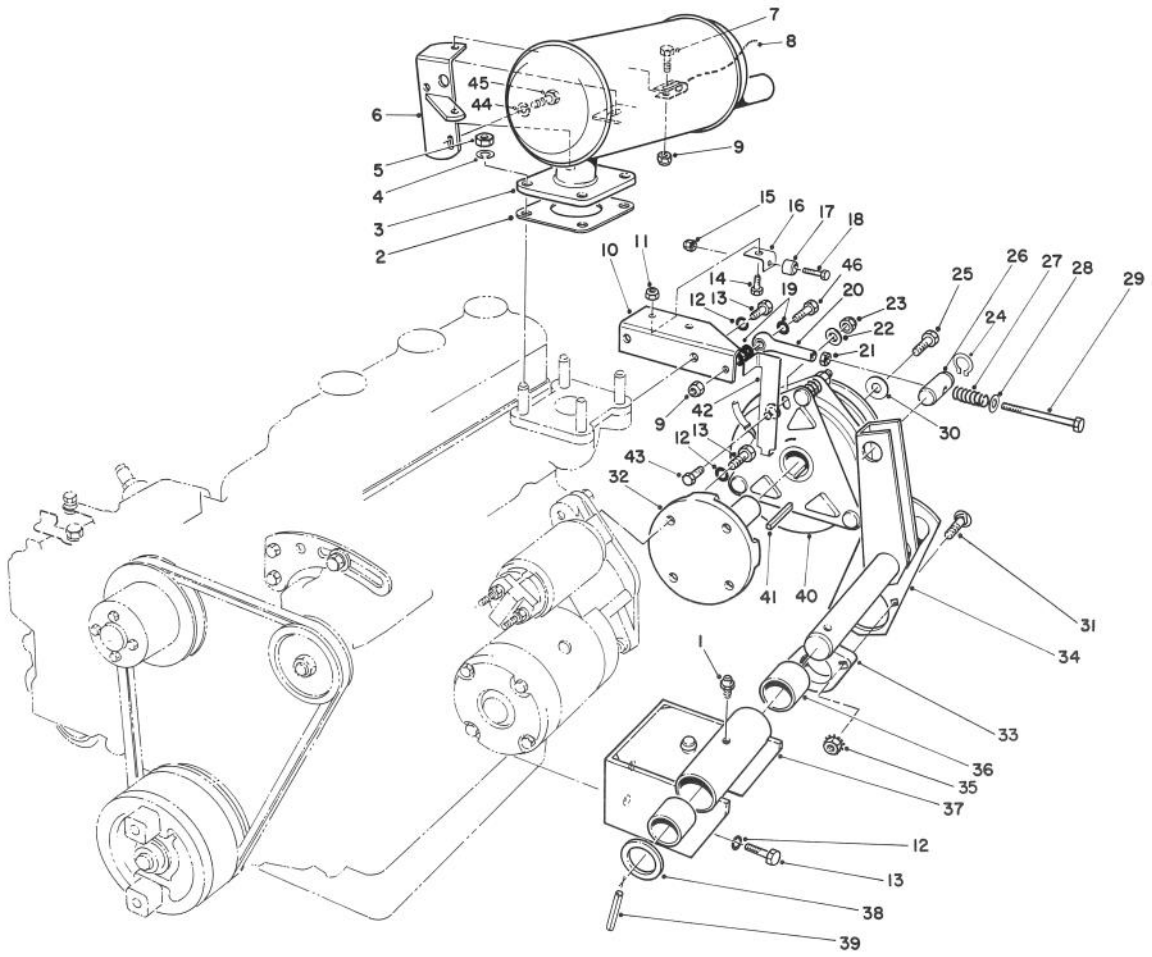

T-0837A

POWER TAKE-OFF ASSEMBLY

Ref. No.	Part No.	Description	No. Used
1	302-5	Fitting - Grease	1
2	53-8130	Gasket - Exhaust	1
3	76-4860	Muffler	1
*	82-7770	Spark Arrester - Muffler (Optional)	1
4	42-9850	Washer - Lock	4
5	48-7930	Nut - Hex	4
6	66-2360	Support - Muffler	2
7	322-5	Screw - Cap Hex. Hd.	1
8	66-2870	Cable - Stop, Hood	1
9	3296-39	Nut - Lock	2
10	63-6700	Bracket	1
11	3296-42	Nut - Lock	2
12	48-9590	Washer - Lock	10
13	63-7790	Screw	10
14	321-3	Screw - Cap Hex. Hd.	2
15	3296-9	Nut -Lock	2
16	63-8230	Angle - Anchor, Clutch	2
17	66-2910	Bumper - Rubber	2
18	3250-39	Screw - Pan Head	2
19	3256-23	Washer - Flat	4
20	66-2900	End - Tie Rod	1
21	3220-2	Nut - Jam	1
22	3256-24	Washer - Flat	2
23	3296-39	Nut - Lock	1

Ref. No.	Part No.	Description	No. Used
24	32151-83	Ring - Retaining	2
25	3212-5	Screw	1
26	63-6290	Pin - Tension	1
27	3-6624	Spring	1
28	4-2390	Washer	1
29	66-3100	Screw	1
30	67-1631	Spacer	1
31	3230-4	Bolt - Carriage	2
32	63-6030	Hub - Clutch	1
33	251-335	Bearing	1
34	63-6250	Shaft - Tension, PTO	1
35	32149-1	Nut - Keps	2
36	256-299	Bushing	2
37	67-1800	Plate - Pivot (Incl. Ref. #1 & 36)	1
38	3-4324	Washer	1
39	32121-32	Pin - Roll	1
40	63-6050	Clutch - Electric	1
41	63-8150	Key	1
42	63-6690	Lever - Anchor, Clutch	1
43	323-34	Screw - Cap Hex. Hd.	1
44	3253-4	Washer - Lock	1
45	66-3160	Screw	1
46	322-6	Screw - Cap Hex. Hd.	1

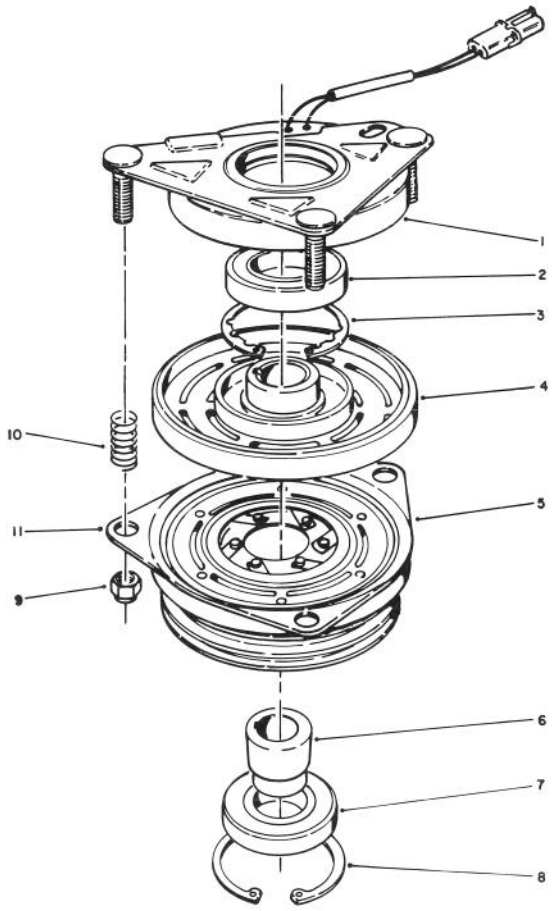

T-0544

CLUTCH ASSEMBLY NO. 63-6050

Ref. No.	Part No.	Description	No. Used
1	67-7050	Assembly - Field Rotor (Incl. Ref. #2-4)	1
2		Bearing - Field	1
3		Ring - Retaining	1
4		Assembly - Field Coil, Rotor & Bearing	1
5	67-7070	Assembly - Arm. & Pulley (Incl. Ref. #6-8)	1

Ref. No.	Part No.	Description	No. Used
6	67-7080	Collar - Bearing	1
7	67-7090	Bearing - Pulley	1
8	67-7060	Ring - Retaining	1
9	3296-6	Nut - Lock	3
10	44-8320	Spring	3
11	67-7100	Plate - Brake	1

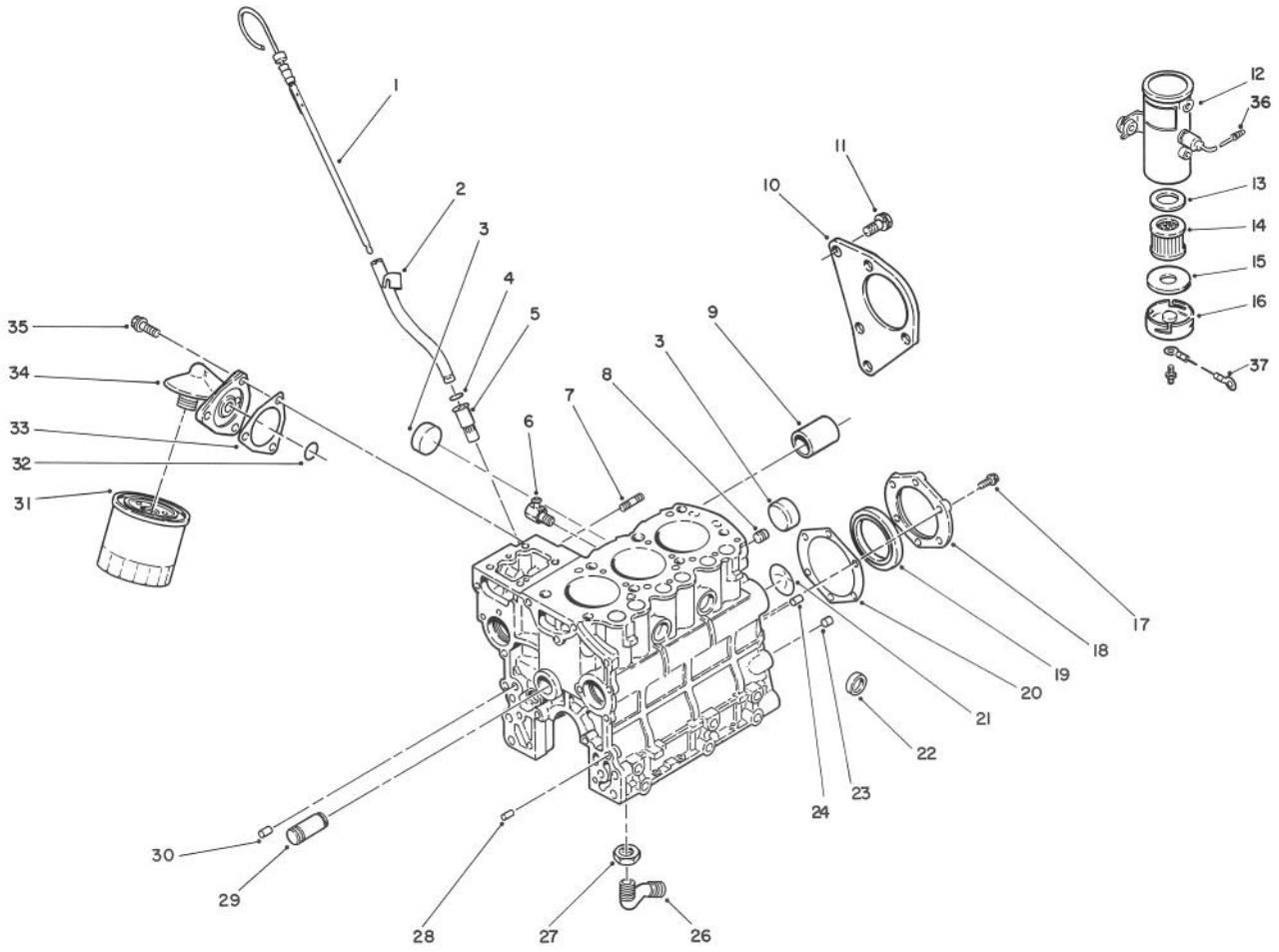

T-0829

ENGINE BLOCK ASSEMBLY

Ref. No.	Part No.	Description	No. Used
1	72-6970	Gauge - Oil Level	1
2	70-8880	Guide - Oil Level Gauge	1
3	56-0020	Cap - Expansion	3
4	43-2710	O-Ring	1
5	72-6950	Retainer - Gauge Guide	1
6	72-6940	Joint - Water Drain	1
7	42-9560	Stud	1
8	67-2390	Plug - Taper	1
9	72-6010	Sleeve	1
10	67-2430	Bracket - Starter	1
11	67-2440	Bolt w/Washer	3
12	53-8150	Assembly - Pump, Fuel (Incl. Ref. #13-16)	1
13	43-2570	Gasket - Coil Side	1
14	43-2550	Filter	1
15	43-2560	Gasket - Cover Side	1
16	43-2580	Magnet	1
17	67-2330	Bolt	6
18	67-2270	Case - Oil Seal	1
19	67-2230	Seal - Oil	1
20	67-2280	Gasket - Case, Oil Seal	1

Ref. No.	Part No.	Description	No. Used
21	67-2350	Plug - Expansion	1
22	42-7080	Cap - Sealing	2
23	67-2380	Bushing - Knock	3
24	67-2360	Bushing - Knock	2
26	67-4340	Assembly - Screen, Oil (Incl. Ref. #27)	1
27	42-9650	Nut - Jam	1
28	67-2370	Bushing - Knock	1
29	67-2260	Shaft - Idler	1
30	42-7190	Bushing - Knock	2
31	67-4330	Assembly - Filter, Oil	1
32	72-6990	O-Ring	1
33	72-6040	Gasket - Bracket, Oil Filter	1
34	72-6030	Bracket - Oil Filter	1
35	72-6980	Bolt	3
36	218-579	Wire - Fuel Pump	1
37	70-8530	Wire - Fuel Pump	1
*	72-6920	Kit - Gasket	1
*	72-6000	Assemby - Cylinder Block	1

*Not Illustrated

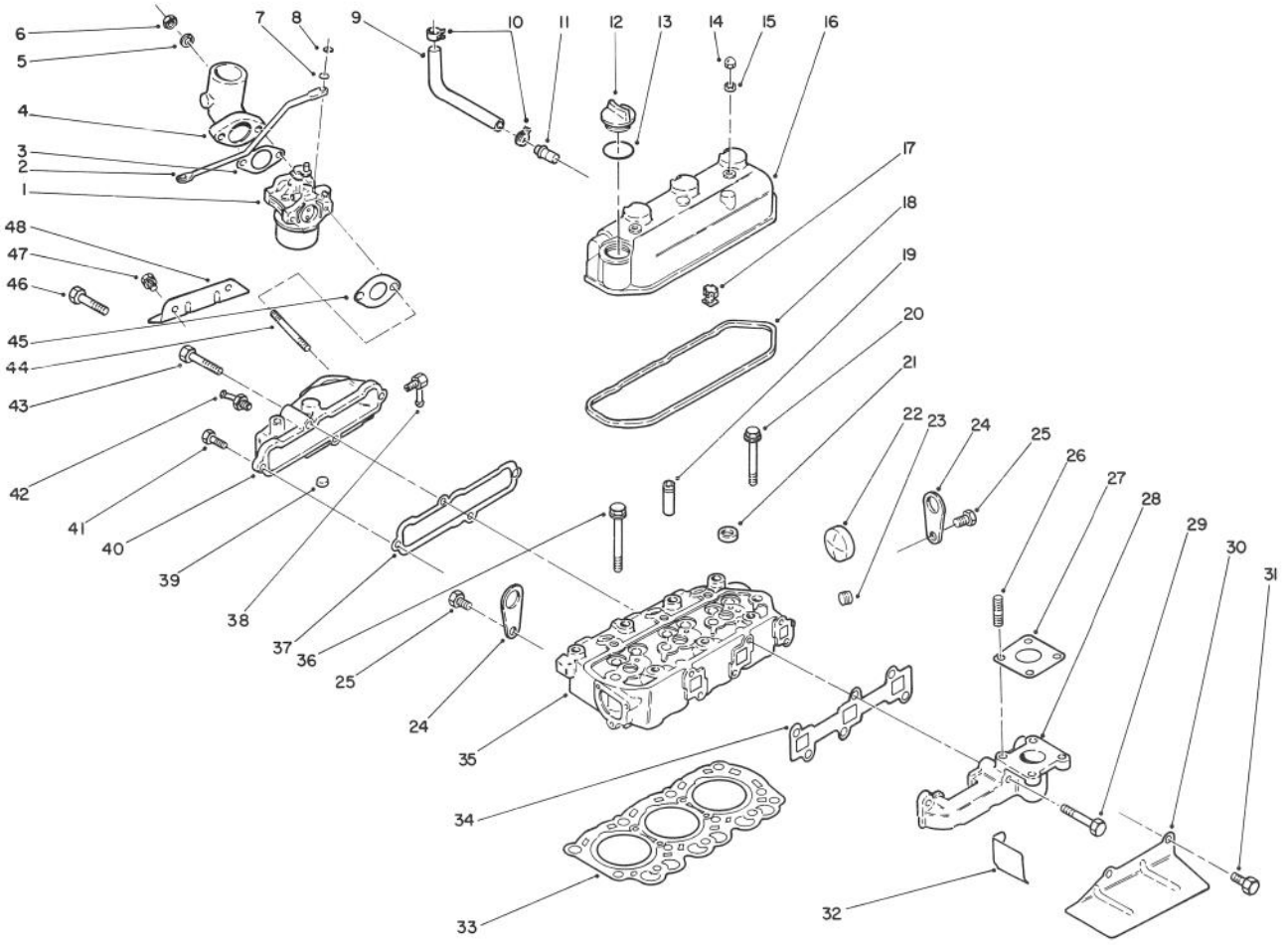

T-0827

CARBURETOR, CYLINDER HEAD & MANIFOLD ASSEMBLIES

Ref. No.	Part No.	Description	No. Used
1	72-6260	Assembly - Carburetor	1
2	72-6220	Rod - Link	1
3	72-6230	Gasket - Pipe, Intake	1
4	72-6250	Pipe - Intake	1
5	72-7000	Washer - Lock	2
6	67-4290	Nut	2
7	72-6210	Washer	2
8	67-4300	Ring - Retaining	2
9	72-7170	Pipe - Breather, Air	1
10	72-7160	Clip - Hose	2
11	42-7510	Pipe	1
12	67-2650	Assembly - Cap, Oil Fill (Incl. Ref. #13)	1
13	67-2660	O-Ring	1
14	67-2770	Nut - Cap	2
15	67-2780	Washer - Flat	2
16	67-2750	Assy. - Cover, Rocker Arm (Incl. Ref. #11)	1
17	72-6070	Separator - Oil	1
18	67-2760	Gasket - Cover, Rocker Arm	1
19	67-2700	Guide - Valve	6
20	67-2740	Bolt - Flange	3
21	67-2710	Cap - Sealing	3
22	56-0020	Plug - Expansion	1
23	67-2570	Plug - Taper	1
24	67-2680	Hanger - Engine	2

Ref. No.	Part No.	Description	No. Used
25	67-2340	Bolt w/Washer	2
26	42-9570	Stud	4
27	42-9110	Gasket	1
28	67-4560	Manifold - Exhaust	1
29	67-4580	Bolt	2
30	72-7020	Cover - Starter	1
31	67-4590	Bolt	4
32	72-6140	Cover - Alternator	1
33	67-2720	Gasket - Cylinder Head	1
34	67-4570	Gasket - Manifold, Exhaust	1
35	72-6050	Assembly - Head, Cylinder (Incl. Ref. #19, & 21-23)	1
36	67-2730	Bolt - Head, Cylinder	8
37	67-4550	Gasket - Manifold, Intake	1
38	72-6110	Joint	1
39	67-2710	Cap - Sealing	1
40	72-6090	Assembly - Cover, Intake (Incl. Ref. #38, 39 & 42)	1
41	67-2330	Bolt	2
42	72-6120	Joint	1
43	67-2620	Bolt	1
44	72-6150	Stud	2
45	72-6240	Gasket - Carburetor	1
46	67-4400	Bolt	1
47	72-7100	Bolt	2
48	72-6130	Cover - Distributor	1

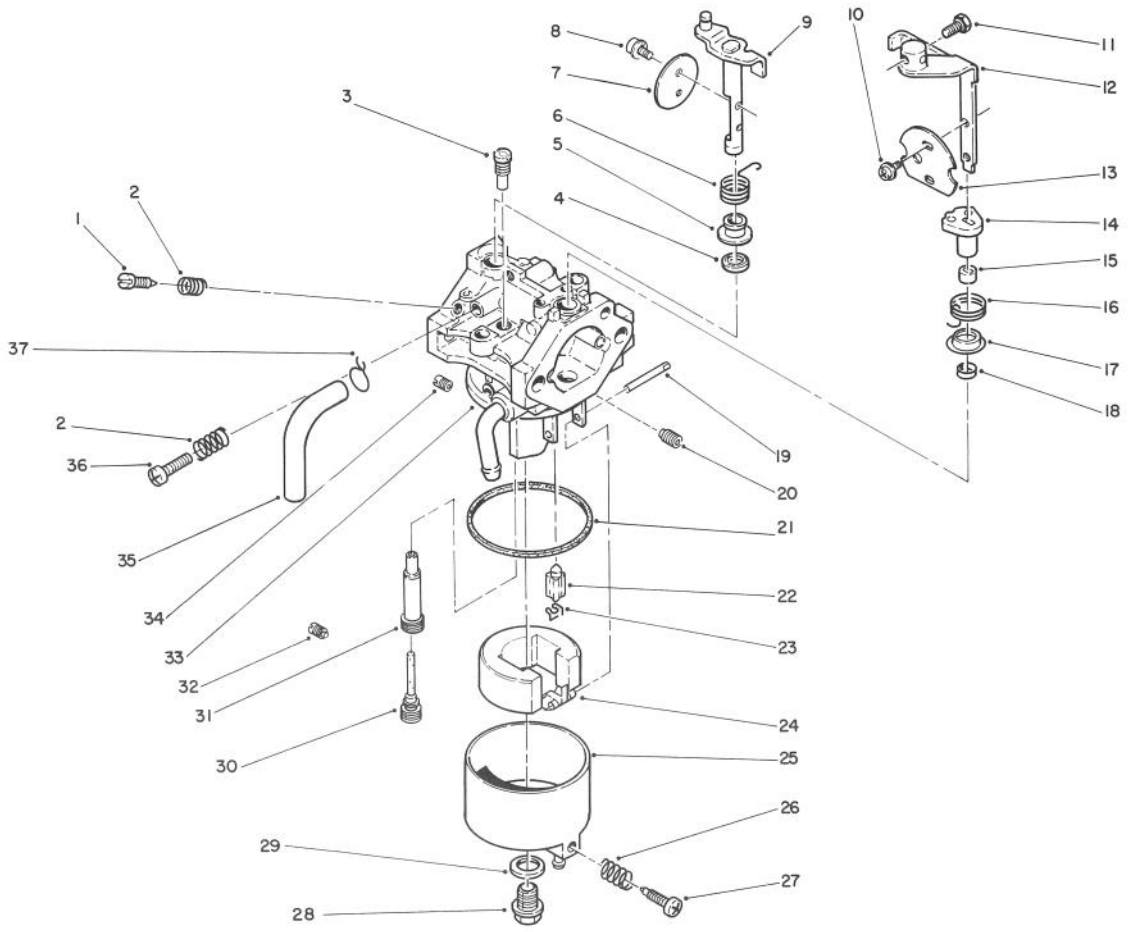

T-0833

CARBURETOR ASSEMBLY

Ref. No.	Part No.	Description	No. Used
1	72-6580	Assembly - Adjuster	1
2	72-6570	Spring	2
3	72-6420	Jet - Pilot (40)	1
4	72-6320	Seal	1
5	72-6310	Ring	1
6	72-6300	Spring	1
7	72-6280	Valve - Throttle	1
8	72-6270	Screw	2
9	72-6290	Assembly - Shaft, Throttle	1
10	72-6330	Screw	2
11	72-6360	Bolt	1
12	72-6350	Assembly - Lever, Choke	1
13	72-6340	Valve - Choke	1
14	72-6370	Ring	1
15	72-6380	Ring	1
16	72-6390	Spring	1
17	72-6400	Cap	1
18	72-6410	Seal	1
19	72-6480	Pin	1

Ref. No.	Part No.	Description	No. Used
20	72-6490	Jet - Main Air (2.0)	1
21	72-6510	Gasket	1
22	72-6450	Assembly - Needle	1
23	72-6460	Clip	1
24	72-6470	Assembly - Float	1
25	72-6520	Assembly - Body, Float	1
26	72-6550	Stop - Spring	1
27	72-6560	Screw	1
28	72-6540	Bolt	1
29	72-6530	Gasket	1
30	72-6440	Nozzle	1
31	72-6430	Nozzle - Main	1
32	72-6650	Jet - Main	1
33	72-6260	Assembly - Carburetor (Incl. Ref. #1-31 & 33-37)	1
34	72-6500	Jet - Pilot Air (1.2)	1
35	72-6600	Hose	1
36	72-6610	Screw	1
37	72-6590	Clip - Spring	1

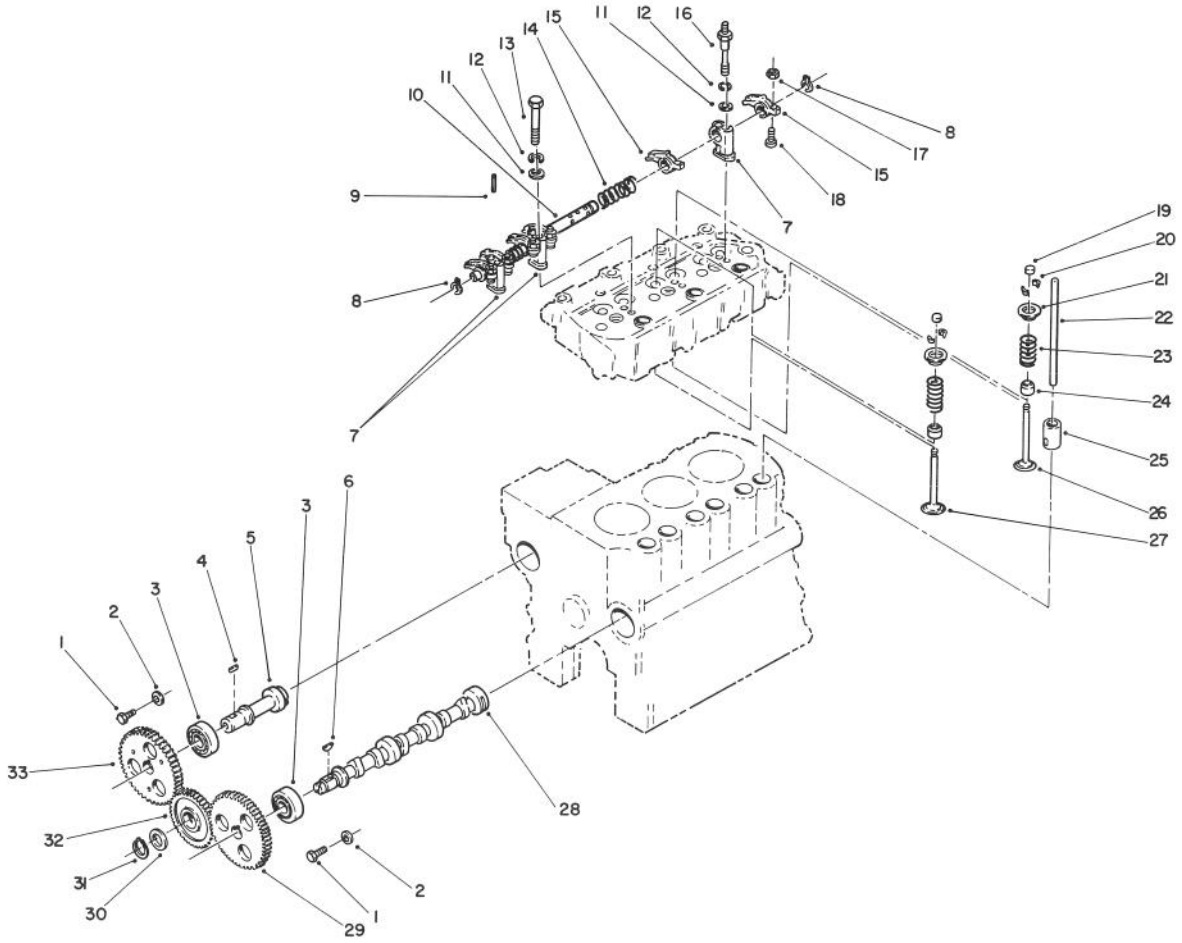

T-0828

CAMSHAFT & VALVE ASSEMBLY

Ref. No.	Part No.	Description	No. Used
1	42-9490	Bolt w/Washer	1
2	67-3000	Washer - Camshaft Stopper	1
3	67-3030	Bearing - Ball	2
4	42-7840	Key - Sunk	1
5	72-6200	Shaft - Distributor	1
6	56-0480	Key - Woodruff	1
7	67-3200	Stay - Rocker	3
8	67-3240	Ring - Retaining	2
9	67-3220	Pin - Grooved	1
10	67-3190	Assembly - Shaft, Rocker	1
11	42-9660	Washer - Flat	3
12	67-3260	Washer - Spring	3
13	42-9510	Bolt	1
14	67-3170	Spring - Shaft, Rocker	2
15	67-3160	Arm - Rocker	6
16	67-3250	Bolt - Stay, Rocker	2
17	67-3230	Nut - Jam	6

Ref. No.	Part No.	Description	No. Used
18	67-3210	Screw - Adjusting	6
19	67-3180	Cap - Stem, Valve	6
20	42-7860	Lock - Retainer	12
21	67-3100	Retainer - Spring, Valve	6
22	67-3150	Rod - Push	6
23	67-3110	Spring - Valve	6
24	42-7870	Seal - Valve Stem	6
25	67-3120	Tappet	6
26	67-3140	Valve - Exhaust	3
27	67-3130	Valve - Intake	3
28	67-3010	Camshaft	1
29	67-3020	Gear - Camshaft	1
30	67-3040	Spacer	1
31	56-1060	Ring - Retaining	1
32	67-3090	Assembly - Gear, Idler	1
33	67-3070	Gear - Pump Cam, Fuel Injection	1

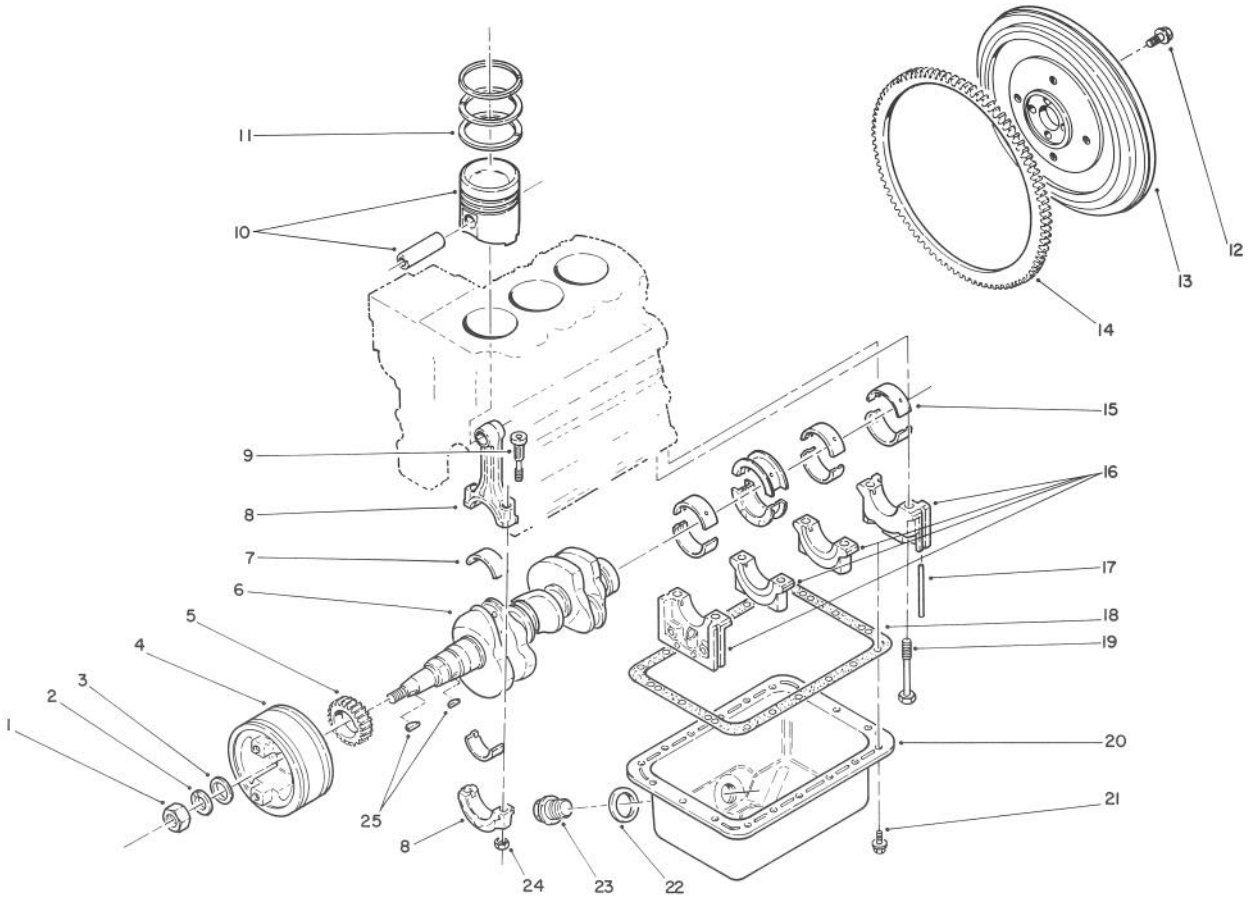

T-0830

PISTON, CAMSHAFT & FLYWHEEL ASSEMBLY

Ref. No.	Part No.	Description	No. Used
1	67-2940	Nut - Jam	1
2	67-2960	Washer - Spring	1
3	67-2950	Washer - Flat	1
4	67-2930	Pulley - Crankshaft	1
5	67-2910	Gear - Crankshaft	1
6	67-2920	Crankshaft	1
7	67-2880	Bearing Set Connecting Rod - Std.	3
*	67-2890	Bearing Set Connection Rod - 0.25 US	3
*	67-2900	Bearing Set Connection Rod - 0.50 US	3
8	67-2850	Assembly - Connecting Rod (Incl. Ref. #9 & 24)	3
9	67-2860	Bolt - Connecting Rod	6
10	72-6160	Piston & Pin Set. Std.	3
*	72-6170	Piston & Pin Set 0.25 OS	3
*	72-6180	Piston & Pin Set 0.50 OS	3
11	67-2790	Ring Set - Piston, Std.	3
*	67-2800	Ring Set - Piston, 0.25 OS	3

Ref. No.	Part No.	Description	No. Used
*	67-2810	Ring Set - Piston, 0.50 OS	3
12	67-2990	Bolt - Flywheel	4
13	67-2970	Assembly - Flywheel (Incl. Ref. #14)	1
14	67-2980	Gear - Ring	1
15	67-2400	Bearing Set Crankshaft Std.	1
*	67-2410	Bearing Set Crankshaft 0.25	1
*	67-2420	Bearing Set Crankshaft 0.50	1
16		Assembly - Bearing, Cap	1
17	67-2200	Slide - Seal	4
18	67-2200	Gasket - Oil Pan	1
19	67-2250	Bolt - Bearing Cap	1
20	67-2470	Assembly - Oil Pan (Incl. Ref. #22 & 23)	1
21	42-9490	Bolt w/Washer	18
22	42-7290	Gasket - Plug, Oil Drain	1
23	42-9260	Plug - Drain, Oil	1
24	42-9590	Nut - Rod, Connecting	6
25	56-0480	Key - Woodruff	2

*Not Illustrated

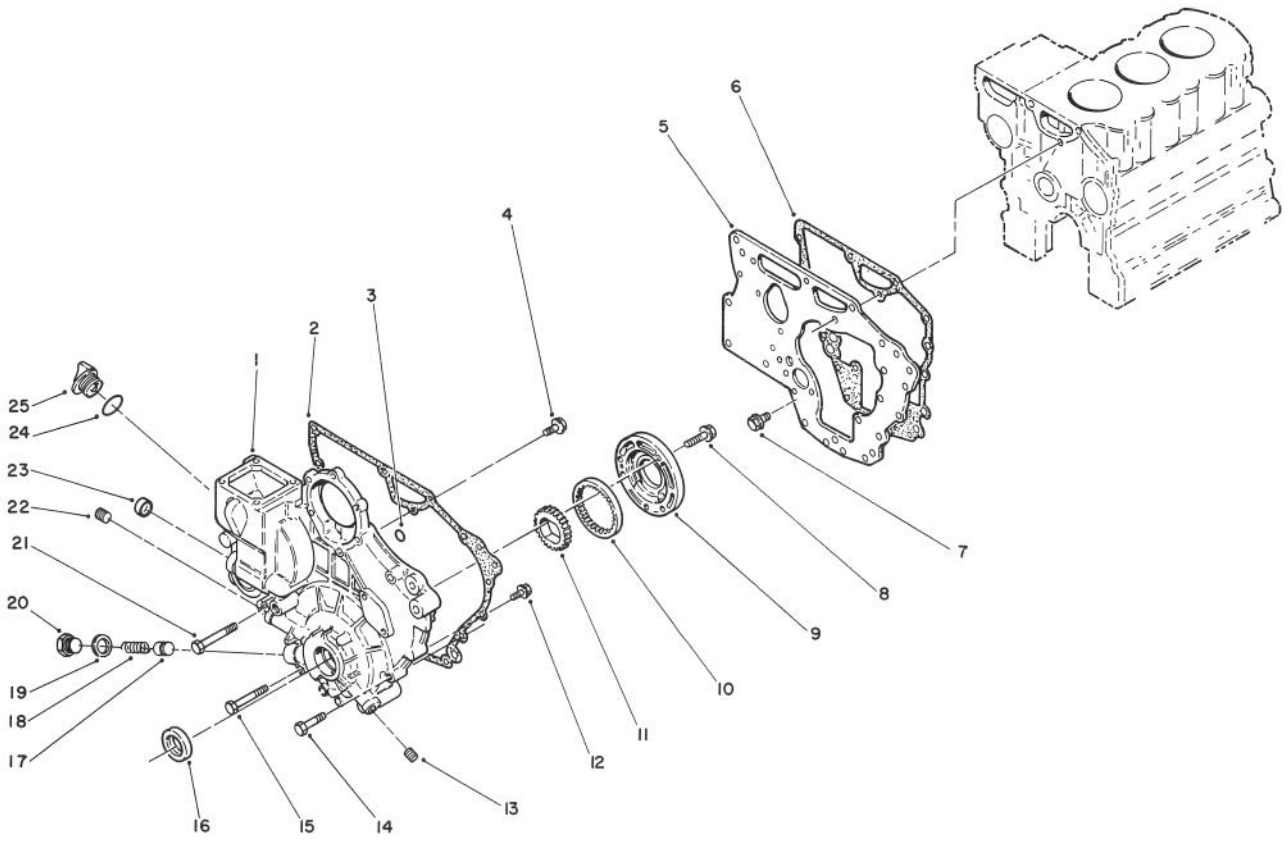

T-0836

GEAR CASE ASSEMBLY

Ref. No.	Part No.	Description	No. Used
1	67-2490	Assembly - Sub, Gear Case	1
2	67-2580	Gasket - Gear Case	1
3	67-2630	O-Ring	2
4	67-2340	Bolt w/Washer	3
5	67-2310	Plate - Front	1
6	67-2320	Gasket - Plate, Front	1
7	42-9440	Bolt w/Washer	7
8	67-2560	Bolt w/Washer	3
9	67-2550	Housing - Pump, Oil	1
10	67-2540	Gear - Outer, Oil Pump	1
11	67-2530	Gear - Inner, Oil Pump	1
12	42-9440	Bolt w/Washer	4
13	42-7210	Plug - Taper	1

Ref. No.	Part No.	Description	No. Used
14	67-2600	Bolt	3
15	67-2610	Bolt	4
16	67-2590	Seal - Oil	1
17	67-2500	Plunger - Relief	1
18	67-2510	Spring - Relief	1
19	42-7290	Gasket - Plug, Drain	1
20	67-2520	Plug	1
21	67-2620	Bolt	1
22	67-2570	Plug - Taper	1
23	67-2640	Cap - Sealing	1
24	67-2660	O-Ring	1
25	67-2650	Assembly - Cap, Oil Filter (Incl. Ref. #24)	1

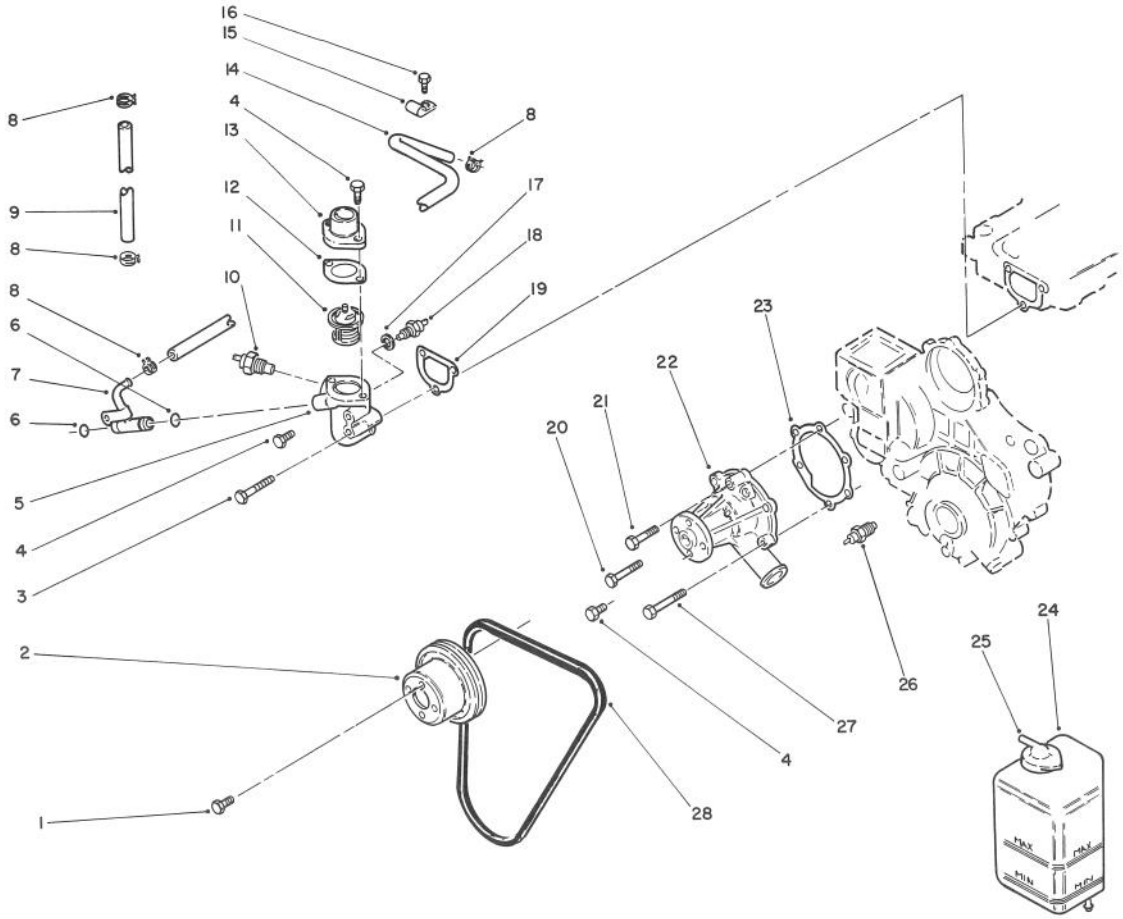

T-0826

WATER PUMP ASSEMBLY

Ref. No.	Part No.	Description	No. Used
1	42-9490	Bolt w/Washer	4
2	67-4360	Pulley - Pump, Water	1
3	67-4470	Bolt	1
4	67-2330	Bolt	6
5	67-4450	Fitting - Thermostat	1
6	43-2710	O-Ring	2
7	72-6740	Pipe - Bypass	1
8	72-7080	Clip - Hose	4
9	72-7090	Hose - Fuel	1
10	67-4510	Gauge - Water Temperture	1
11	67-4440	Thermostat	1
12	67-4430	Gasket - Fitting, Water Out.	1
13	67-4420	Fitting - Water Outlet	1
14	72-7120	Hose - Fuel	1
15	72-7110	Clip	1

Ref. No.	Part No.	Description	No. Used
16	72-7100	Bolt	1
17	67-4490	Gasket - Switch	1
18	67-4500	Switch - Temp. Shut-Down	1
19	67-4460	Gasket - Fitting, Thermostat	1
20	67-4400	Bolt	1
21	67-2600	Bolt	1
22	67-4380	Assembly - Pump, Water	1
23	67-4390	Gasket - Pump, Water	1
24	67-7380	Assembly - Tank, Reservoir (Incl. Ref. #23)	1
25	71-1520	Assembly - Cap, Reservoir	1
26	67-4350	Switch - Oil Pressure	1
27	67-2610	Bolt	2
28	67-4410	V-Belt	1

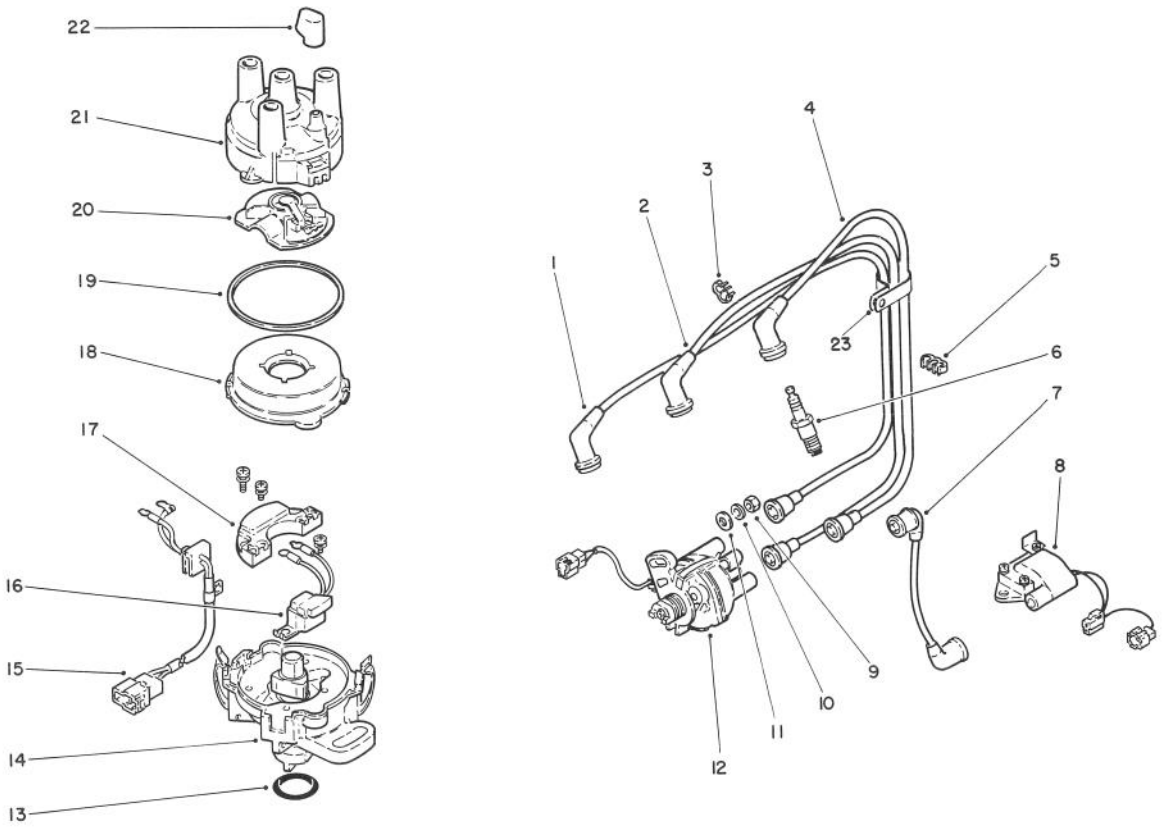

T-0834

DISTRIBUTOR ASSEMBLY

Ref. No.	Part No.	Description	No. Used
1	72-6890	Assembly - Cable Spark Plug No. 1	1
2	72-6900	Assembly - Cable Spark Plug No. 2	1
3	72-7150	Clamp - Hose, Emission	1
4	72-6910	Assembly - Cable Spark Plug No. 3	1
5	72-7140	Clip - Hose	1
6	72-7130	Assy. - Spark Plug (BP4ES)	3
7	72-6190	Assy. - Cable, High Tension	1
8	72-6880	Assembly - Coil, Ignition	1
9	67-4180	Nut	1
10	67-3260	Washer - Spring	1
11	42-9660	Washer - Flat	1

Ref. No.	Part No.	Description	No. Used
12	72-6750	Assembly - Distributor	1
13	72-6830	O-Ring	1
14	72-6820	Housing Set	1
15	72-6850	Lead Wire Set w/Screws	1
16	72-6810	Pick Up Set w/Screws	1
17	72-6800	Igniter Set w/Screws	1
18	72-6790	Cover	1
19	72-6780	Gasket	1
20	72-6770	Assembly - Rotor	1
21	72-6760	Assembly - Cap (Incl. Ref. #22)	1
22		Assembly - Cap	3
23	2412-106	R-Clamp	1
*	72-6840	Screw Set - Distributor	1

*Not Illustrated

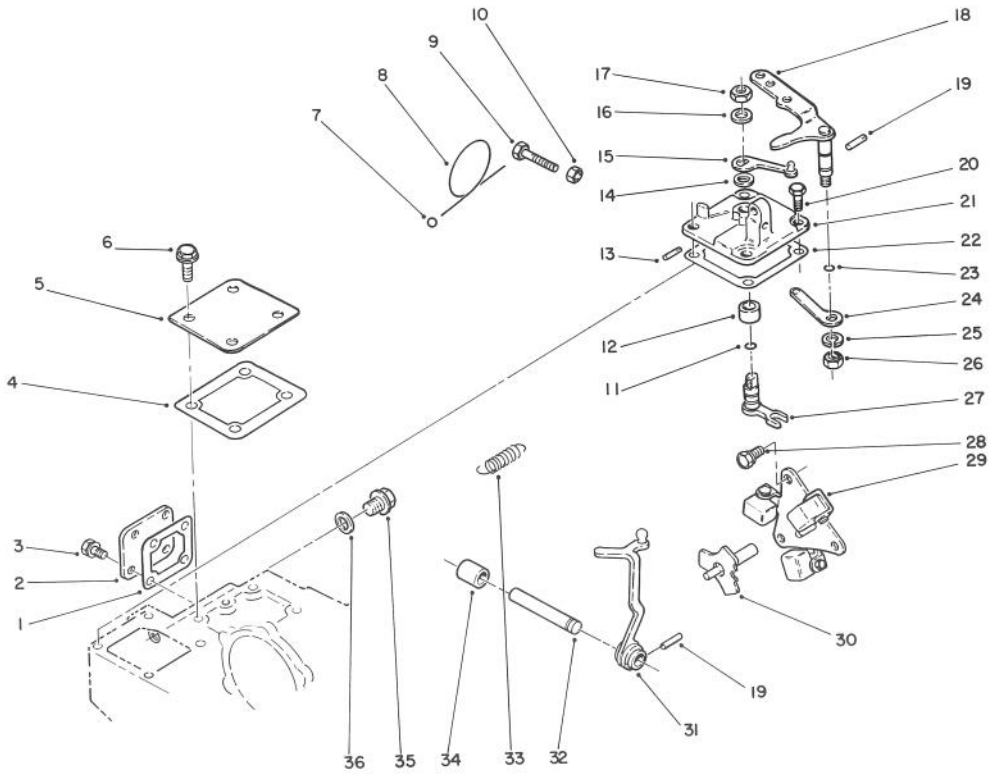

T-0835

GOVERNOR ASSEMBLY

Ref. No.	Part No.	Description	No. Used
1	67-4310	Gasket - Cover, Tie Rod	1
2	67-4250	Cover - Tie Rod	1
3	42-9440	Bolt w/Washer	4
4	72-6870	Gasket - Cover	1
5	72-6860	Cover	1
6	72-7070	Bolt w/Washer	4
7	42-8690	Metal - Sealing	1
8	42-8700	Wire	1
9	42-9420	Bolt - Speed Set	1
10	67-4290	Nut	1
11	72-6660	O-Ring	1
12	72-6670	Bushing	1
13	67-4120	Pin - Grooved	1
14	72-6710	Seal - Dust	1
15	72-6700	Lever - Throttle	1
16	67-3260	Washer - Spring	1
17	42-9640	Nut - Jam	1
18	67-3990	Assy. - Lever, Speed Cont.	1

Ref. No.	Part No.	Description	No. Used
19	67-4000	Pin - Grooved	2
20	67-4270	Bolt	4
21	67-4230	Cover - Governor	1
22	67-4160	Gasket - Cover, Governor	1
23	42-8830	O-Ring	1
24	72-6630	Lever - Spring, Governor	1
25	67-3260	Washer - Spring	1
26	42-9640	Nut -Jam	1
27	72-6690	Assembly - Lever, Inner	1
28	42-9430	Bolt w/Washer	3
29	72-6720	Assy. - Weight, Governor	1
30	72-6730	Assembly - Shaft, Sliding	1
31	72-6640	Assembly - Lever, Governor	1
32	67-4050	Shaft - Governor	1
33	72-7050	Spring - Governor	1
34	72-7040	Bushing	1
35	72-6620	Plug	1
36	72-7030	Gasket	1

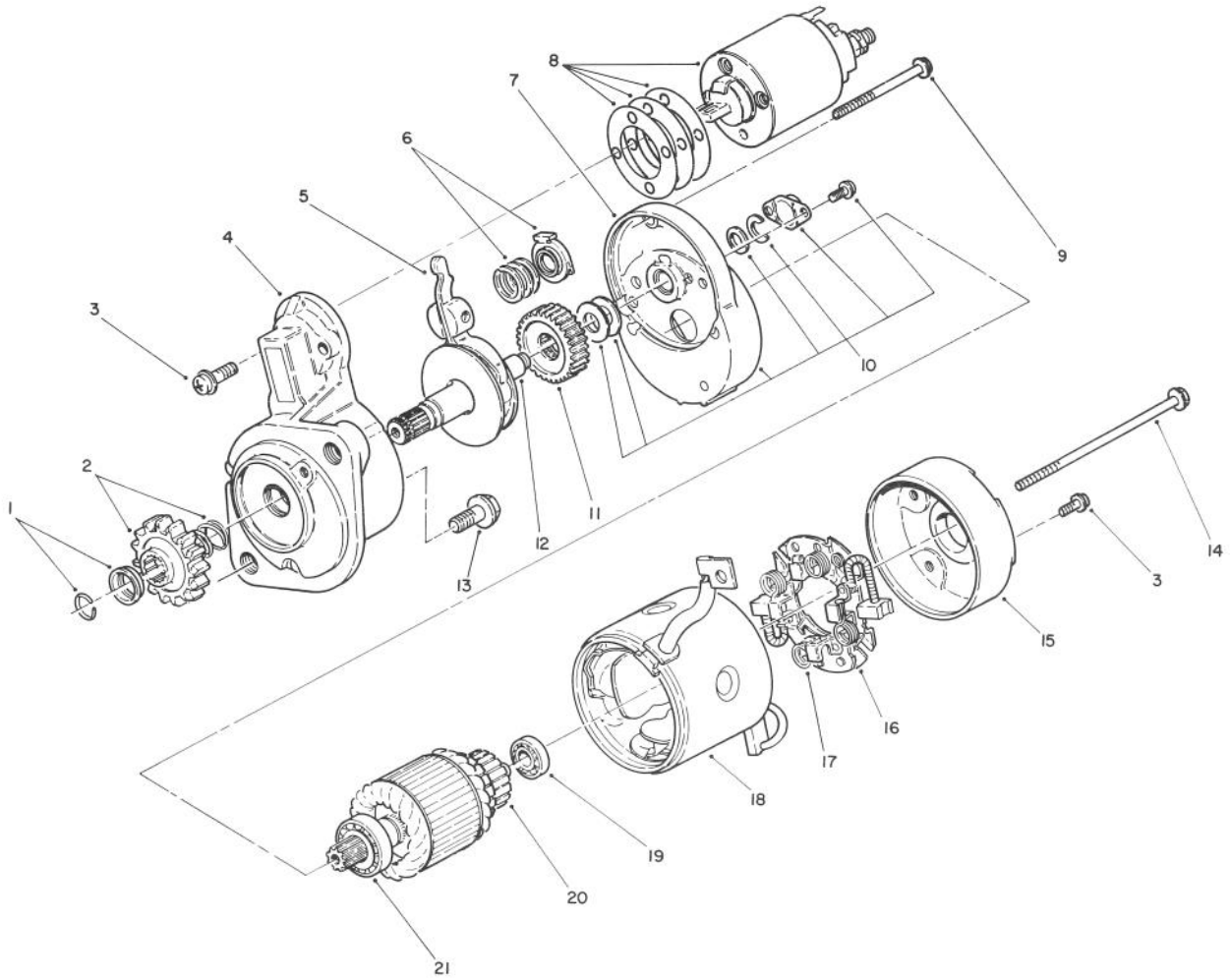

T-0831

STARTER ASSEMBLY

Ref. No.	Part No.	Description	No. Used
1	56-1640	Stopper Set	1
2	67-4770	Pinion Set (Incl. Ref. #1)	1
3	56-1510	Screw - Set	2
4	67-4710	Assembly - Bracket, Front	1
5	67-4720	Assembly - Lever	1
6	67-4730	Spring Set	1
7	67-4740	Assembly - Bracket, Center	1
8	67-4750	Assembly - Switch	1
9	52-1570	Bolt Set	1
10	56-1680	Cover Set (Incl. Ref. #7)	1
11	56-1670	Gear	1
12	67-4790	Assembly - Shaft	1
*	67-4780	Gear Set (Incl. Ref. #11-12)	1

Ref. No.	Part No.	Description	No. Used
*	67-4760	Assembly - Shaft, Clutch (Incl. Ref. #1-12)	1
13		Bolt - Engine Mounting	2
14	56-5610	Bolt	2
15	56-1720	Assembly - Bracket, Rear	1
16	56-1700	Assembly - Holder (Incl. Ref. #17)	1
17	56-1710	Spring - Brush	4
18	67-4800	Assembly - Yoke	1
19	56-1600	Bearing - Rear	1
20	56-1580	Armature Set (Incl. Ref. #19 & 21)	1
21	56-1590	Bearing - Front	1
*	67-4600	Assembly - Starter, Compl. (12V-1.6 Kw) (Incl. Ref. #1-21)	1

*Not Illustrated

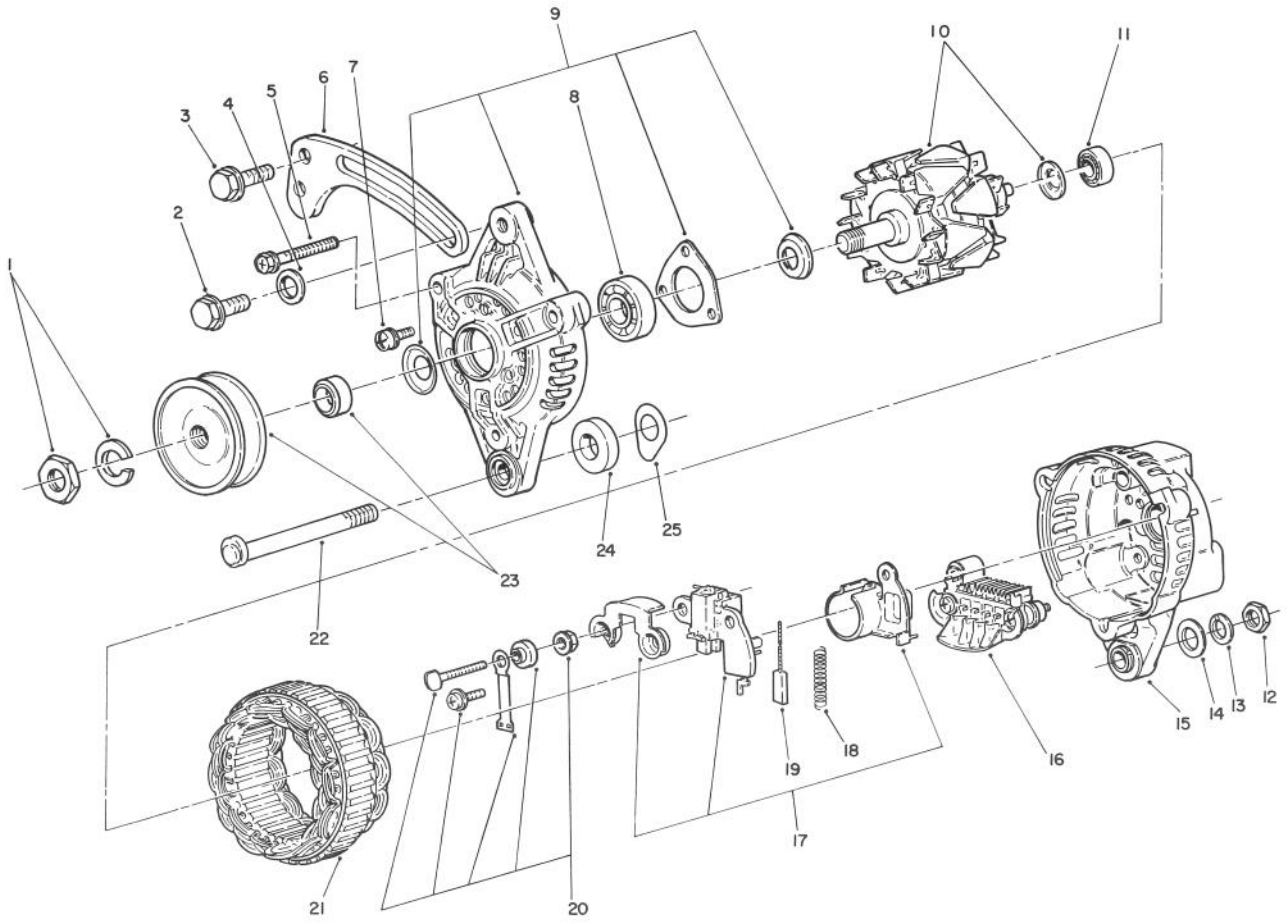

T-0832

ALTERNATOR ASSEMBLY

Ref. No.	Part No.	Description	No. Used
1	43-1920	Nut - Set	1
2	67-4660	Bolt - Flange	1
3	42-9440	Bolt w/Washer	1
4	54-8660	Washer - Flat	1
5	67-4820	Bolt Set	1
6	75-4940	Brace	1
7	67-4840	Screw Set	1
8	67-4850	Bearing - Front	1
9	67-4830	Assembly - Bracket, Front (Incl. Ref. #7 & 8)	1
10	67-4860	Assembly - Rotor (Incl. Ref. #11)	1
11	67-4870	Bearing - Rear	1
12	67-4670	Nut	1
13	67-3260	Washer - Lock	1
14	42-9660	Washer - Flat	1

Ref. No.	Part No.	Description	No. Used
15	67-4890	Assembly - Bracket, Rear (Incl. Ref. #16-20)	1
16	67-4930	Assembly - Rectifier	1
17	67-4910	Assembly - Regulator (Incl. Ref. #18-19)	1
18	43-0510	Spring - Brush	2
19	67-4920	Brush	2
20	67-4900	Terminal Set	1
21	67-4880	Assembly - Stator	1
22	67-4640	Bolt	1
23	67-4810	Pulley Set	1
24	67-4620	Spacer	1
25	43-0370	Shim	5
*	67-4630	Assembly - Alternator (Incl. Ref. #1-25)	1

*Not Illustrated

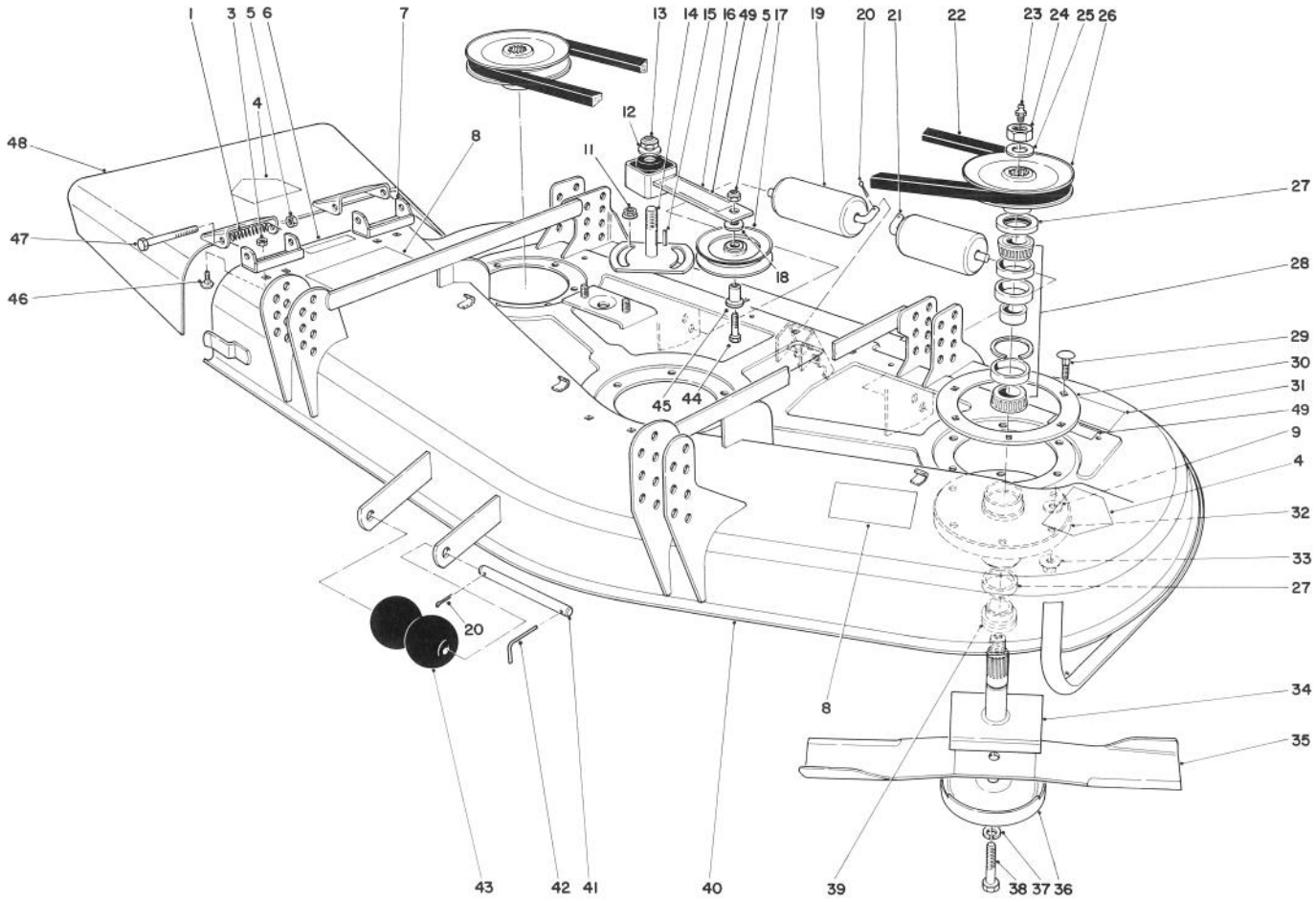

T-0574

52" CUTTING UNIT MODEL NO. 30555

Ref. No.	Part No.	Description	No. Used
1	40-6230	Spring - Torsion	2
3	32128-20	Nut - Lock	
4	43-8480	Decal - Danger	2
5	3296-5	Nut - Lock	3
6	66-6380	Decal - Deflector Missing	1
7	29-5590	Pivot Bracket - Deflector	2
8	66-1340	Decal - Danger	2
9	3256-24	Washer - Flat	18
11	3290-357	Nut - Flange	2
12	3256-27	Washer - Flat	1
13	3296-33	Nut -Lock	1
14	28-9060	Plate - Idler	1
15	5-1077	Key - Square	1
16	27-8580	Idler Socket	1
17	65-5940	Pulley - Idler	1
18	7-0081	Washer - Special	1
19	36-1740	Roller - Deck	2
20	3272-11	Pin - Cotter	3
21	40-0340	Shaft - Rear Roller	2
22	27-1160	V-Belt	1
23	302-2	Fitting - Grease	3
24	32146-20	Nut - Lock	3
25	7-4150	Washer	3
26	27-0970	Pulley	3
27	253-139	Seal - Wave	6
28	46-8530	Assembly - Bearing	3

Ref. No.	Part No.	Description	No. Used
29	3231-22	Bolt - Carriage	18
30	27-7680	Ring - Deck Support	3
31	68-8340	Decal - Blade Bolt Torque	1
32	61-4160	Housing - Spindle	3
33	32128-21	Nut - Flange	18
34	27-0920	Spindle - Shaft	3
35	27-0990	Blade	3
36	72-9361	Anti-Scalp Cup	3
37	3253-27	Washer - Lock	3
38	44-2200	Screw - Blade Bolt	3
39	27-0950	Spacer - Spindle Bearing	3
40	72-9210	Cutting Deck	1
41	40-6400	Shaft - Roller	1
42	57-0690	Pin - Cotter, Special	1
43	29-4820	Roller	2
44	3211-8	Screw - Cap Hex. Hd.	1
45	65-5950	Bushing - Pulley	1
46	3230-23	Bolt - Carriage	4
47	3211-15	Screw - Cap Hex. Hd.	2
48	13-3949	Deflector - Grass (Incl. Ref. #4)	1
49	67-5360	Decal - Shield Missing	2
*	44-5480	Blade - High Sail (Optional)	3
*	27-0870	Assembly - Spindle (Incl. Ref. #23-28, 32, 34 & 39)	3

*Not Illustrated

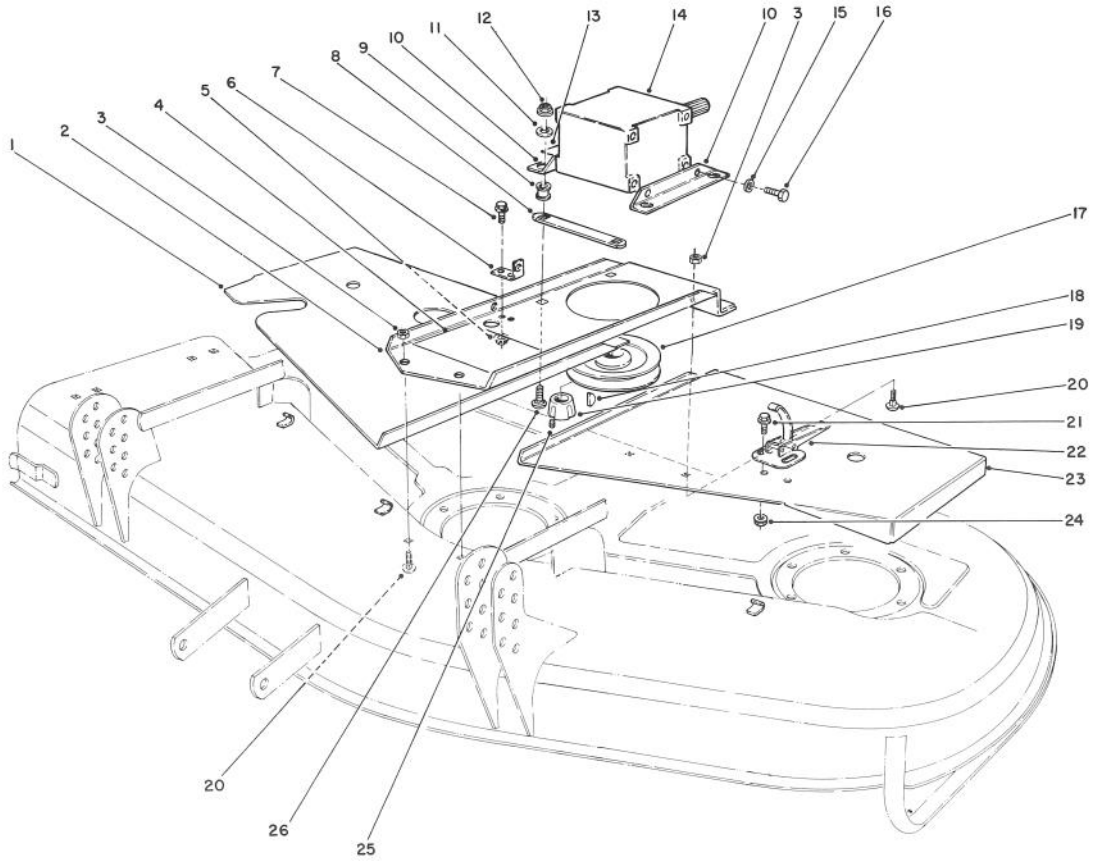

T-0576

52" CUTTING UNIT MODEL NO. 30555 (Continued)

Ref. No.	Part No.	Description	No. Used
1	72-9300	Cover R.H.	1
2	72-9230	Base - Gear Box	1
3	3290-357	Nut - Flange	4
4	51-3960	Decal - 52	1
5	32128-20	Nut - Flange	2
6	72-9240	Bracket - Extension	1
7	322-4	Screw - Cap Hex. Hd.	2
8	68-9890	Cover - Gear Box	1
9	63-9750	IS0 Mount - Gear Box	4
10	68-8560	Bracket - Gear Box	2
11	63-8410	Washer	4
12	32153-2	Nut	4
13	70-2560	Decal - Lube	1
14	68-6810	Assembly - Gear Box	1

Ref. No.	Part No.	Description	No. Used
15	3253-21	Washer - Flat	4
16	323-4	Screw - Cap Hex. Hd.	4
17	63-9900	Pulley - Gear Box	1
18	3257-5	Key - Woodruff	1
19	27-6140	Bushing - Taper Lock (Incl. Ref. #25)	1
20	3231-27	Bolt - Carriage	4
21	3290-321	Screw - Machine	6
22	249-21	Latch - Draw	3
23	72-9340	Cover L.H.	1
24	32128-7	Nut - Flange	6
25	3245-9	Screw - Set, Socket Hd.	1
26	3231-26	Bolt - Carriage	4

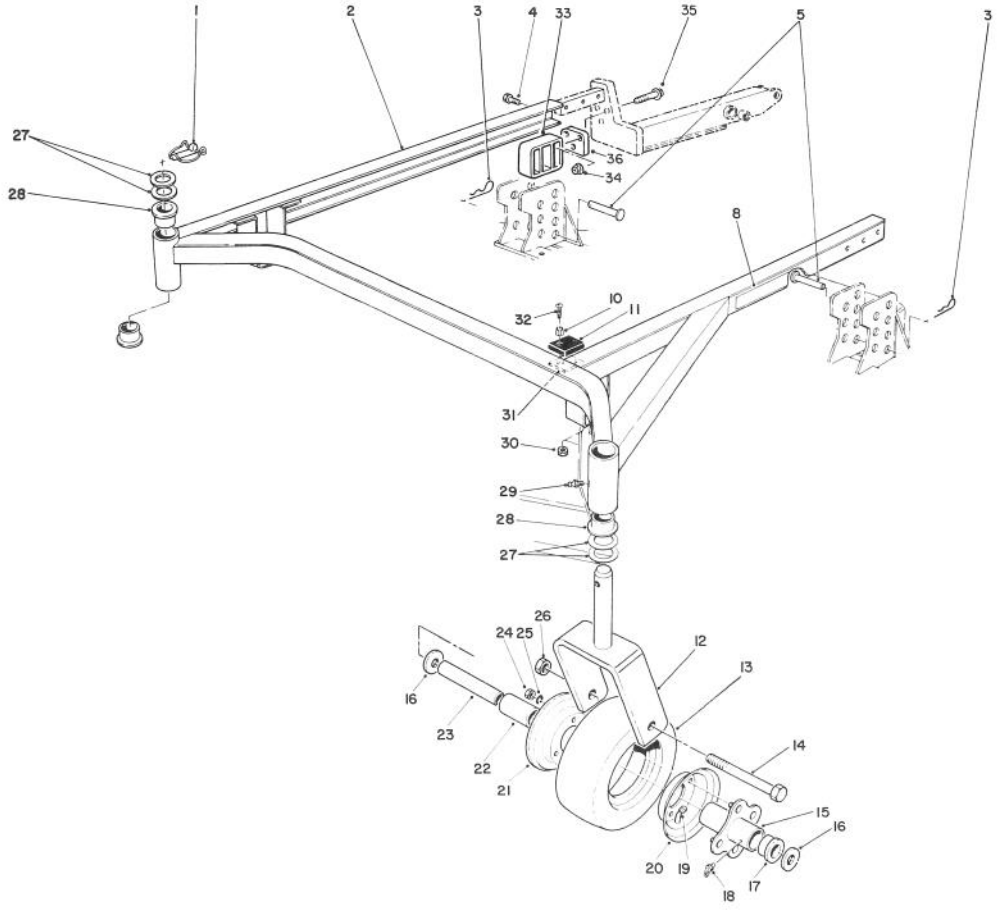

T-1249A

52" CUTTING UNIT MODEL NO. 30555 (Continued)

Ref. No.	Part No.	Description	No. Used
1	3290-384	Pin – Lynch	2
2	83-4550	Frame – Deck Suspension (Incl. Ref. #28)	1
3	3290-355	Pin – Hair	4
4	325-32	Screw – Cap Hex Hd.	6
5	283-55	Pin – Clevis	4
6	302-40	Fitting – Grease	2
8	68-8360	Decal – H.O.C.	1
10	40-9520	Spacer – Split	4
11	40-0330	Cushion – Rubber	2
12	68-8900	Fork – Castor, Front	2
13	68-8960	Tire	2
14	325-19	Screw – Cap Hex Hd.	2
15	68-8940	Hub – Center	2
16	3256-6	Washer – Thrust	4
17	62-5580	Bushing	4
18	302-61	Fitting – Grease	2
19	68-8950	Tube w/Valve	2
20	68-8920	Wheel Half – Female	2

Ref. No.	Part No.	Description	No. Used
21	68-8930	Wheel Half – Male	2
22	62-5570	Bearing – Roller	2
23	68-8980	Bushing – Spanner	2
24	3217-6	Nut – Hex.	8
25	3253-4	Washer – Lock	8
26	32153-5	Nut – Lock	2
27	3-6781	Washer – Thrust	8
28	28-9290	Bushing – Special	4
29	302-5	Fitting – Grease	2
30	3296-2	Nut – Lock	4
31	42-6200	Cushion – Shim	A/R
32	32122-28	Screw – Mach. Truss Hd.	4
33	83-4520	Cradle – Rear	2
34	32128-40	Nut – Flange	6
35	3234-20	Screw – Flange Hd.	6
36	83-4580	Spacer	2
*	13-3869	Assembly – Castor Wheel (Incl. Ref. #13, 15, 17-22 & 24-25)	2

*Not Illustrated

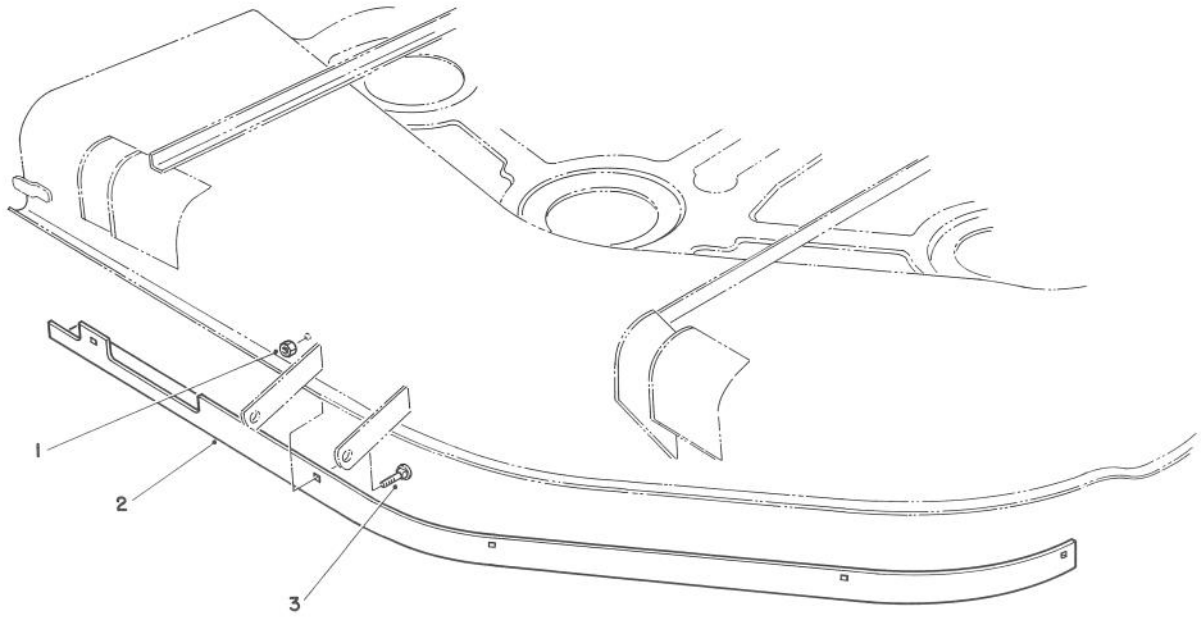

T-0708

52" BAFFLE KIT PART NO. 68-7210
(Used on Cutting Unit Model 30555)

Ref. No.	Part No.	Description	No. Used
1	3296-47	Nut - Lock	5
2		Baffle	1

Ref. No.	Part No.	Description	No. Used
3	3230-20	Bolt - Carriage	5

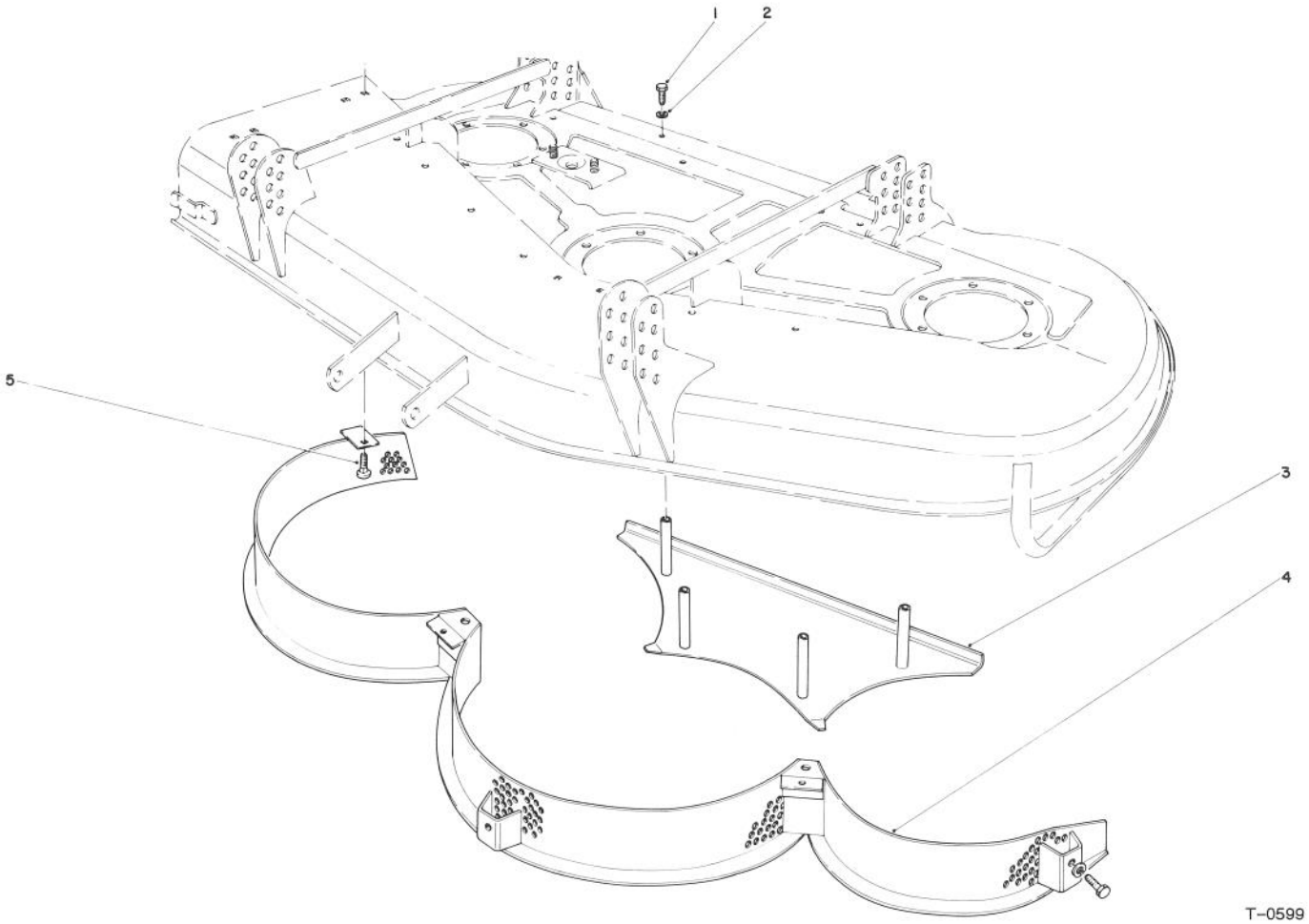

T-0599

52" MULCHER KIT MODEL NO. 30700 (OPTIONAL)
(Used on Cutting Unit Model 30555)

Ref. No.	Part No.	Description	No. Used
1	323-6	Screw - Cap Hex. Hd.	8
2	3253-21	Washer - Lock	8
3	42-6340	Shelf - Bottom, Rear	1

Ref. No.	Part No.	Description	No. Used
4	42-6310	Screen - Mulcher	1
5	3230-1	Bolt - Carriage	1

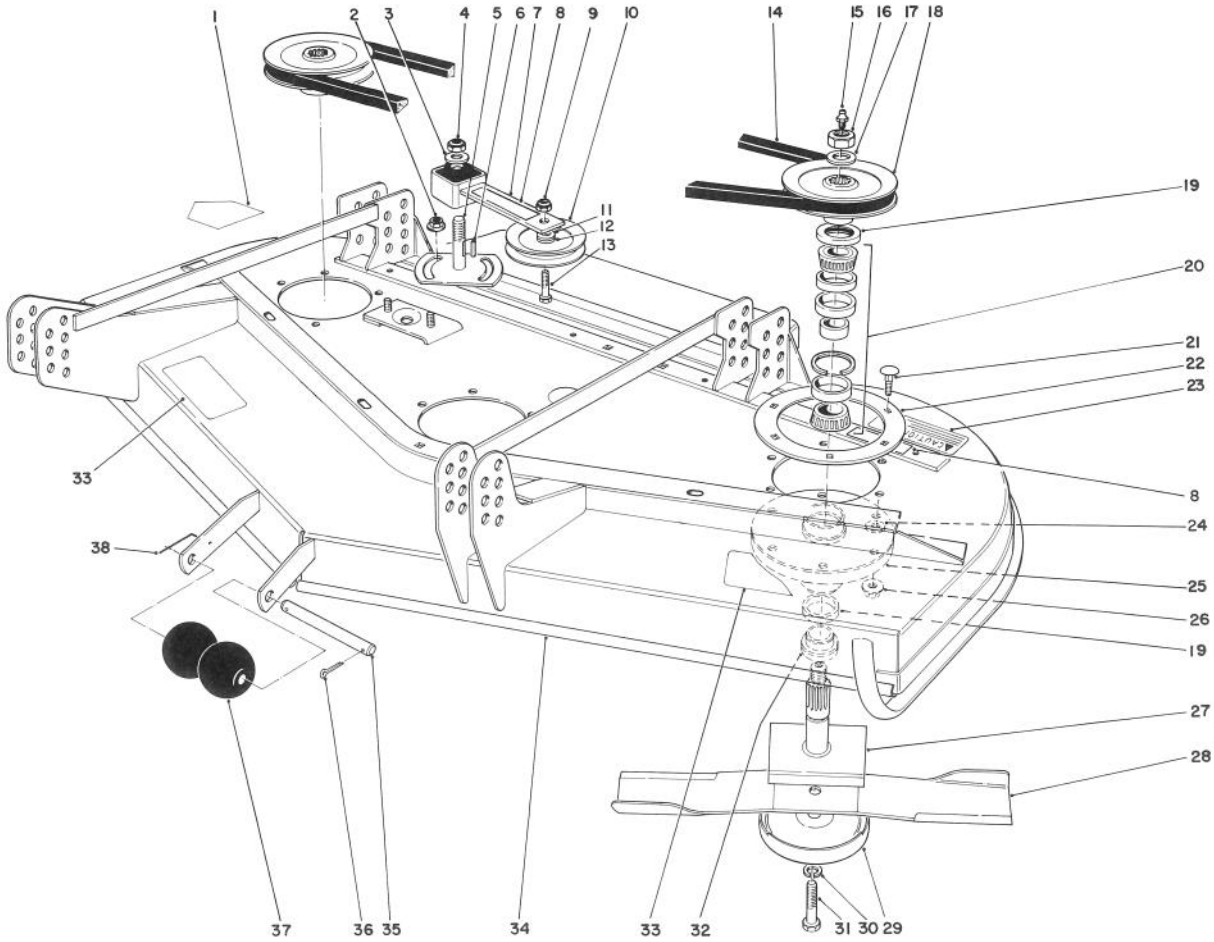

T-0577

52" CUTTING UNIT MODEL NO. 30568

Ref. No.	Part No.	Description	No. Used
1	43-8480	Decal - Danger	1
2	3296-357	Nut - Flange	2
3	3256-27	Washer - Flat	1
4	3296-33	Nut - Lock	1
5	28-9060	Plate - Idler	1
6	5-1077	Key - Square	1
7	27-8580	Idler Socket	1
8	67-5360	Decal - Shield Missing	2
9	3296-5	Nut - Lock	1
10	65-5940	Pulley - Idler	1
11	7-0081	Washer	1
12	65-5950	Bushing	1
13	3211-8	Screw - Cap Hex. Hd.	1
14	27-1160	V-Belt	1
15	302-2	Fitting - Grease	3
16	32146-20	Nut - Hex. Lock, Jam	3
17	7-4150	Washer	3
18	27-0970	Pulley	3
19	253-139	Seal - Wave	6
20	46-8530	Assembly - Bearing	3
21	3231-22	Bolt - Carriage	18

Ref. No.	Part No.	Description	No. Used
22	27-7680	Ring - Deck Support	2
23	68-8340	Decal - Blade Bolt Torque	1
24	3256-24	Washer - Flat	18
25	61-4160	Housing - Spindle	3
26	32128-21	Nut - Flange	18
27	27-0920	Spindle Shaft	3
28	27-0990	Blade	3
29	72-9361	Cup - Anti Scalp	3
30	3253-27	Washer - Lock	3
31	44-2200	Screw - Blade	3
32	27-0950	Spacer - Spindle Bearing	3
33	66-1340	Decal - Danger	2
34	72-9260	Cutting Deck	1
35	40-6400	Shaft - Roller	1
36	3272-11	Pin - Cotter	1
37	29-4820	Roller	2
38	57-0690	Pin - Cotter, Special	1
*	27-0870	Assembly - Spindle (Incl. Ref. #15-20, 25, 27 & 32)	3

*Not Illustrated

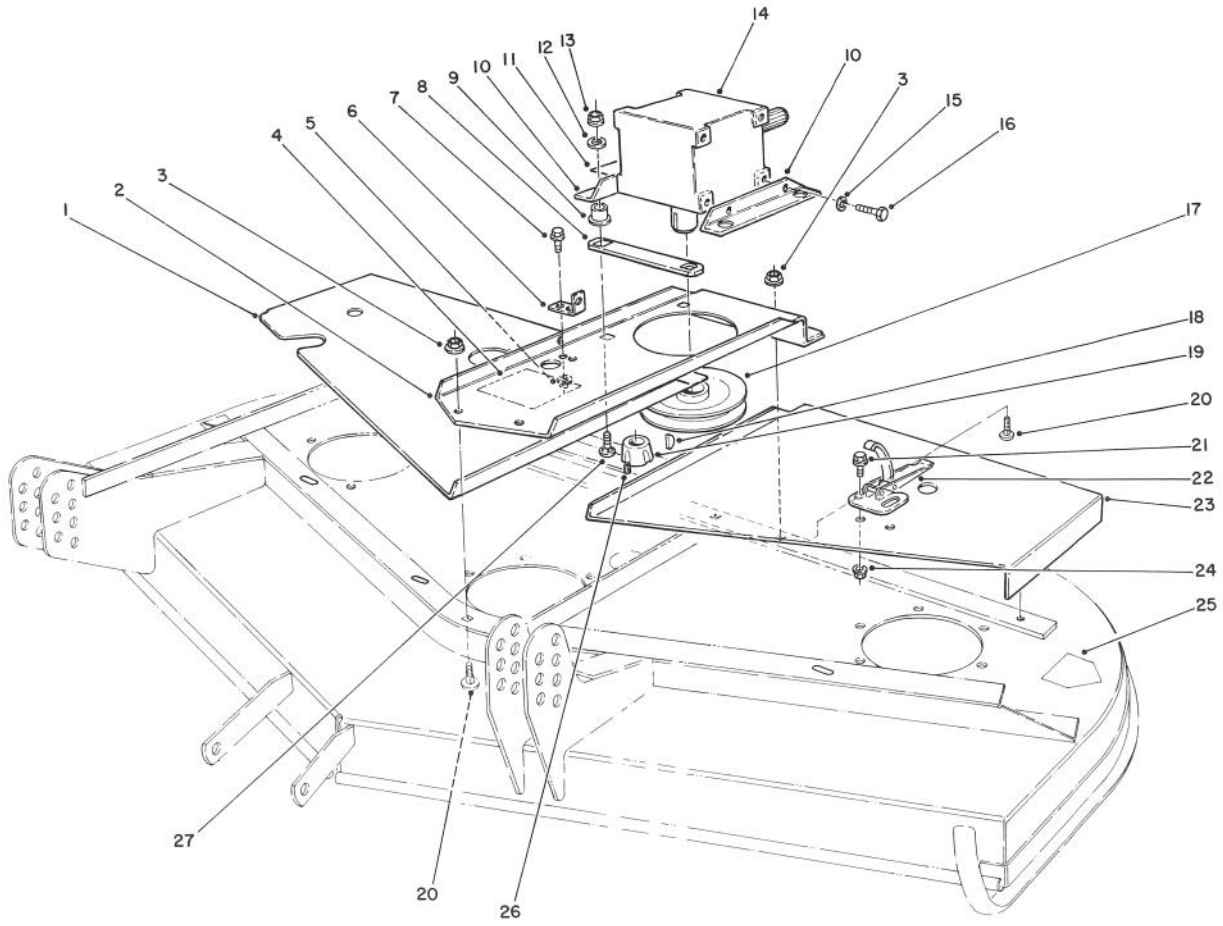

T-0578

52" CUTTING UNIT MODEL NO. 30568 (Continued)

Ref. No.	Part No.	Description	No. Used
1	72-9330	Cover R.H.	1
2	72-9230	Base - Gear Box	1
3	3290-357	Nut - Flange	4
4	51-3960	Decal - 52	1
5	32128-20	Nut - Flange	2
6	72-9240	Bracket - Extension	1
7	322-4	Screw - Cap Hex. Hd.	2
8	68-9890	Cover - Front Gear Box	1
9	63-9750	ISO Mount - Gear Box	4
10	68-8560	Bracket - Gear Box	2
11	70-2560	Decal - Lube	1
12	63-8410	Washer - Lock	4
13	32153-2	Nut	4
14	68-6810	Gear Box	1

Ref. No.	Part No.	Description	No. Used
15	3253-21	Washer - Lock	4
16	323-4	Screw - Cap Hex. Hd.	4
17	63-9900	Pulley	1
18	3257-5	Key - Woodruff	1
19	27-6140	Bushing - Taper Lock (Incl. Ref. #26)	1
20	3231-22	Bolt - Carriage	4
21	3290-321	Screw - Mach. Hex. Hd.	6
22	249-21	Latch - Draw	3
23	80-0080	Cover L.H.	1
24	32128-17	Nut - Flange	4
25	43-8480	Decal - Danger	1
26	3245-9	Screw - Set, Socket Hd.	2
27	3231-26	Bolt - Carriage	4

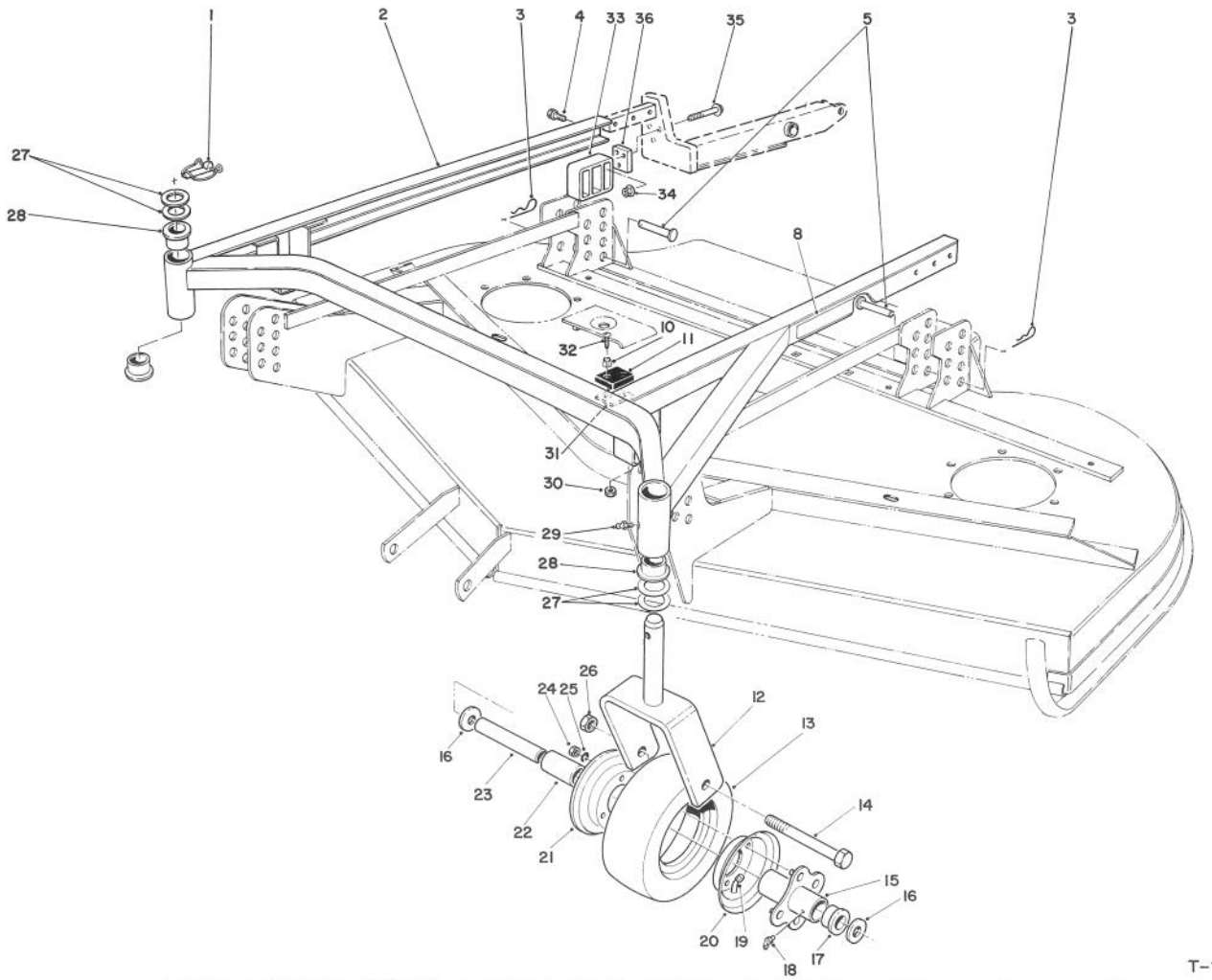

T-1250

52" CUTTING UNIT MODEL NO. 30568 (Continued)

Ref. No.	Part No.	Description	No. Used
1	3290-384	Pin - Lynch	2
2	83-4550	Assembly - Frame, Deck (Incl. Ref. #28)	1
3	3290-355	Pin - Hair, Cotter	4
4	325-32	Screw - Cap Hex. Hd.	6
5	283-55	Pin - Clevis	4
8	71-2760	Decal - H.O.C.	1
10	40-9520	Spacer - Split	4
11	40-0330	Cushion - Rubber	2
12	68-8900	Fork - Castor, Front	2
13	68-8960	Tire	2
14	325-19	Screw - Cap Hex. Hd.	2
15	68-8940	Hub - Center	2
16	3256-6	Washer - Flat	4
17	62-5580	Bushing	4
18	302-61	Fitting - Grease	2
19	68-8950	Tube w/Valve	2
20	68-8920	Wheel Half - Female	2
21	68-8930	Wheel Half - Male	2

Ref. No.	Part No.	Description	No. Used
22	62-5570	Bearing - Roller	2
23	68-8980	Bushing - Spanner	2
24	3217-6	Nut - Hex.	8
25	3253-4	Washer -Lock	8
26	32153-5	Nut - Lock	2
27	3-6781	Washer - Thrust	8
28	28-9290	Bushing - Special	4
29	302-5	Fitting - Grease	2
30	3296-2	Nut - Lock	4
31	42-6200	Shim - Cushion	3
32	32122-28	Screw - Mach. Truss Hd.	4
33	83-4520	Cradle - Rear	2
34	32128-40	Nut - Flange	6
35	3234-20	Screw - Flange Hd.	6
36	83-4580	Spacer	2
*	13-3869	Assembly - Castor Wheel (Inc. Ref. #13, 15, 17-22 & 24-25)	2

*Not Illustrated

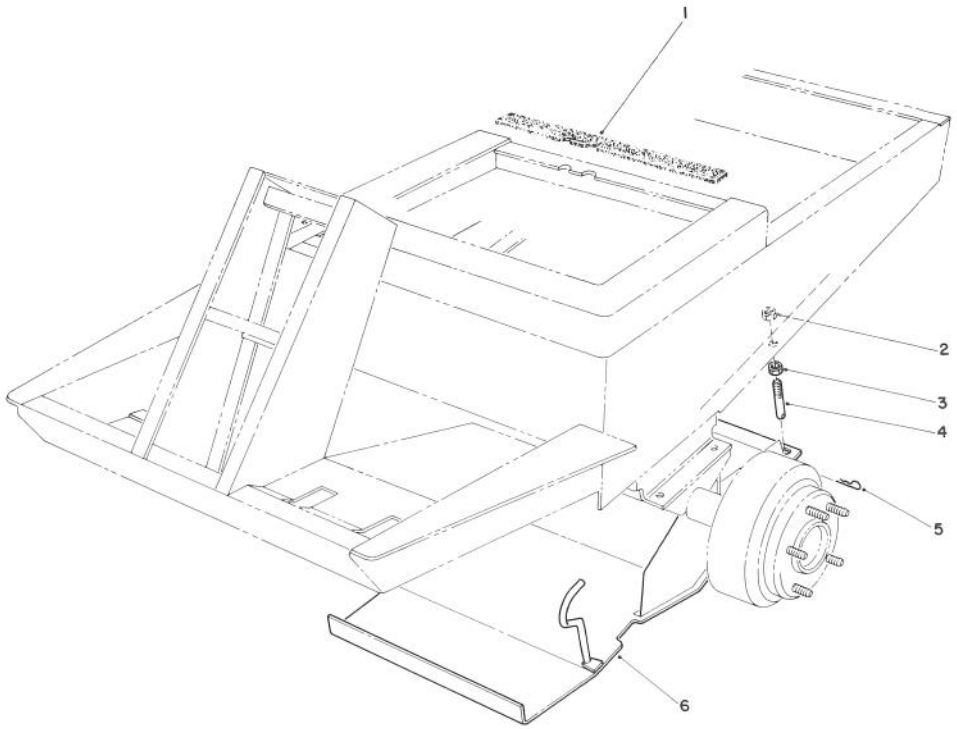

T-0193

TRACTOR SHIELD KIT MODEL NO. 30567 (Optional)
For Use With Cutting Unit Model No. 30568

Ref. No.	Part No.	Description	No. Used
1	67-9580	Seal - Foam	1
2	3217-9	Nut - Hex.	2
3	3218-5	Nut - Hex. Jam	2

Ref. No.	Part No.	Description	No. Used
4	67-9590	Pin - Mounting	2
5	3290-468	Pin - Hair, Cotter	2
6	67-9610	Assembly - Shield	1

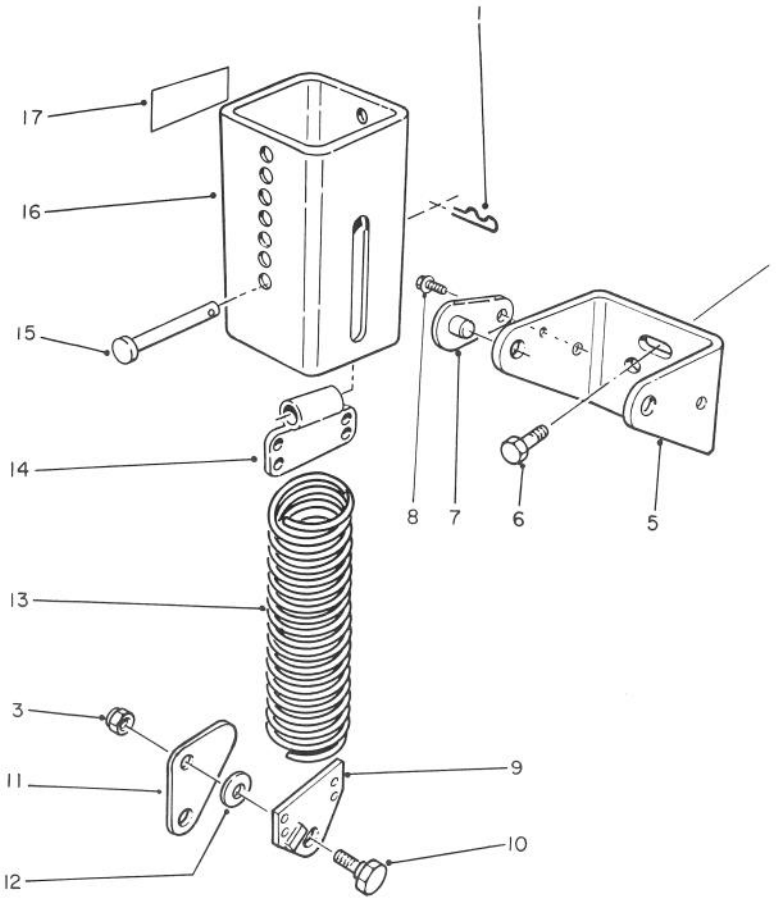

T-1217

52" COUNTER BALANCE KIT MODEL NO. 30712**

Ref. No.	Part No.	Description	No. Used
1	3290-355	Pin - Hair, Cotter	1
3	3296-44	Nut - Lock	2
5	66-8460	Bracket - Mounting	1
6	3234-11	Screw - Flange	2
7	70-7920	Assembly - Pin, Lock	2
8	12-3270	Screw - Self Tapping	2
9	66-8420	End - Spring	1
10	46-3380	Bolt - Shoulder	2

Ref. No.	Part No.	Description	No. Used
11	66-8450	Link - Knee	1
12	3256-24	Washer - Flat	2
13	66-8390	Spring - Extension	1
14	70-7940	End - Spring	1
15	283-69	Pin - Clevis	1
16	70-7970	Assembly - Cover, Spring	1
17	55-4300	Decal - Caution	2

**Furnished with 52" Cutting Unit Model 30555 & 52" Cutting Unit Model 30568.

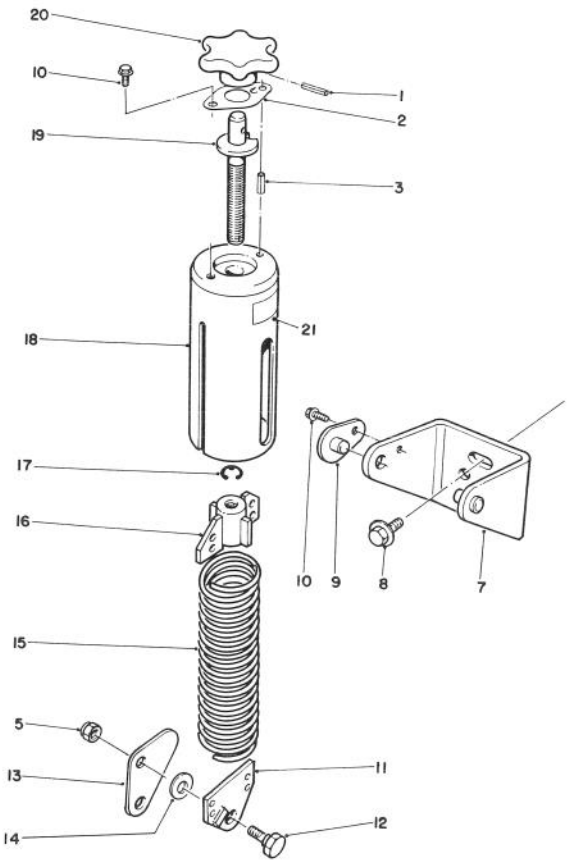

T-1218

52" WEIGHT TRANSFER KIT MODEL NO. 30702

Ref. No.	Part No.	Description	No. Used
1	32121-12	Pin - Roll	1
2	66-8330	Spring - Detent	1
3	32121-13	Pin - Roll	1
4	323-11	Screw - Cap Hex. Hd.	2
5	3296-44	Nut - Lock	2
7	66-8470	Bracket	1
8	3234-11	Screw - Flange	2
9	66-8250	Pin -Lock	1
10	12-3270	Screw - Self-Tap	2
11	66-8420	End - Spring	1
12	46-3380	Bolt - Shoulder	2
13	66-8450	Link - Knee	1

Ref. No.	Part No.	Description	No. Used
14	3256-24	Washer - Flat	2
15	66-8390	Spring - Heavy Duty	1
16	66-8340	End - Spring	1
17	32120-47	E-Ring	1
18	66-8300	Assembly - Cover, Spring	1
19	66-8270	Shaft	1
20	59-4380	Knob	1
21	55-4300	Decal - Caution	2
*	66-8400	Assy. - Counterbalance (Incl. Ref. #1-3 & 10-12 & 15-21)	1

*Not Illustrated

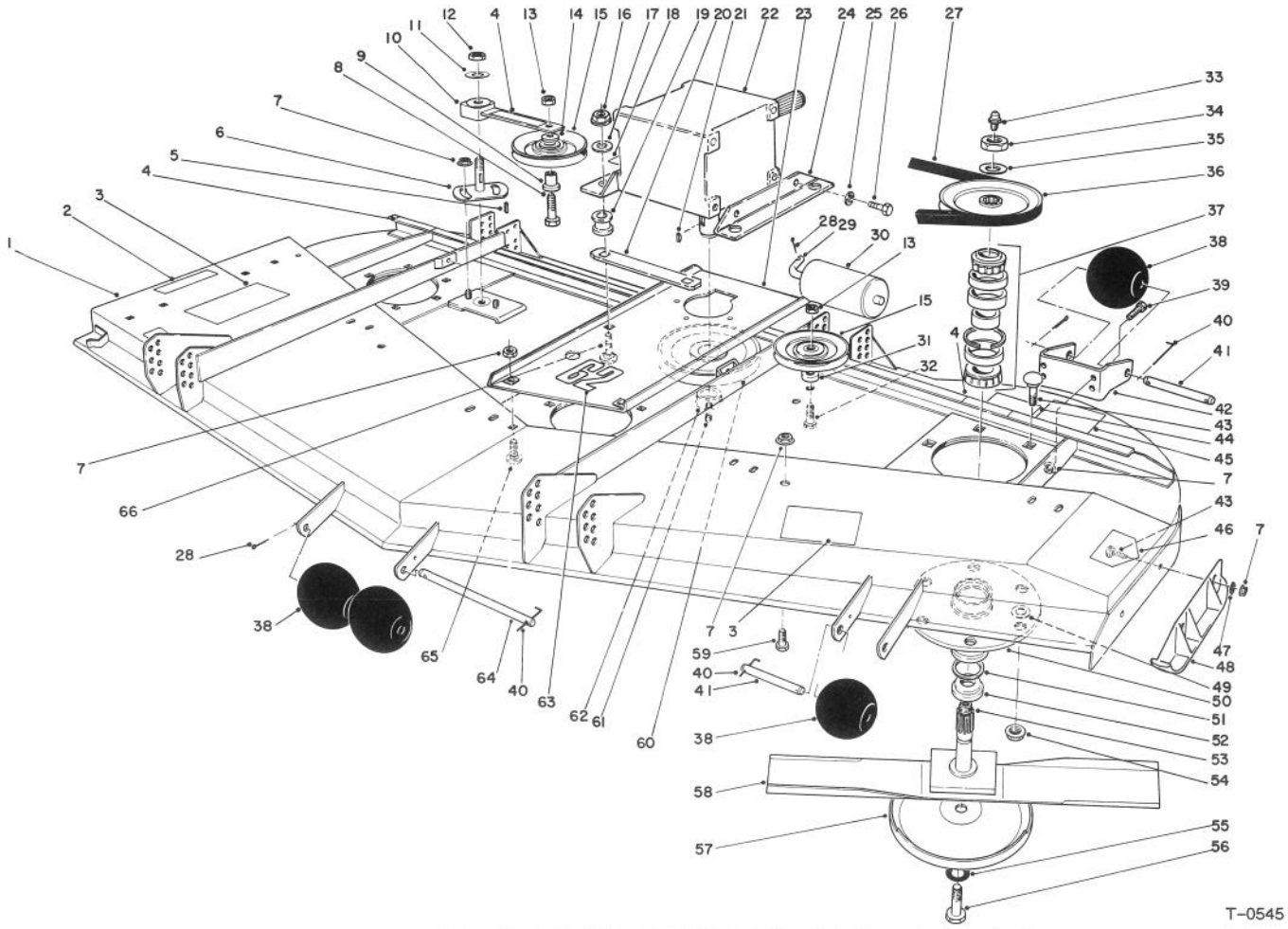

62" CUTTING UNIT MODEL NO. 30564

Ref. No.	Part No.	Description	No. Used
1	63-9840	Cutting Deck	1
2	66-6380	Decal - Defector Missing	1
3	66-1340	Decal - Danger	2
4	67-5360	Decal - Shield Missing	3
5	5-1077	Key - Square	1
6	44-6300	Plate - Idler	1
7	3290-357	Nut - Lock	12
8	3211-8	Screw - Cap Hex. Hd.	1
9	65-5950	Bushing - Pulley	2
10	27-8580	Assy. - Idler Socket/Bushing	1
11	3256-27	Washer - Flat	1
12	3296-33	Nut - Lock	1
13	3296-5	Nut - Lock	2
14	7-0081	Washer - Special	2
15	65-5940	Pulley - Idler	2
16	32153-2	Nut - Flange	4
17	63-8410	Washer	4
18	70-2560	Decal - Lube	1
19	63-9750	Mount	4
20	68-9890	Cover -Gear Box, Front	1
21	3257-5	Key - Woodruff	1
22	68-6810	Gear Box	1
23	72-9310	Base - Gear Box	1
24	68-8560	Assy. - Bracket, Gear Box	2
25	3253-21	Washer - Lock	4
26	323-4	Screw - Cap Hex. Hd.	4

Ref. No.	Part No.	Description	No. Used
27	44-6260	V-Belt	1
28	3272-11	Pin - Cotter	5
29	40-0340	Shaft - Rear Roller	2
30	36-1740	Roller - Deck	2
31	44-6390	Spacer	1
32	3211-9	Screw - Cap Hex. Hd.	1
33	302-2	Fitting - Grease	3
34	32146-20	Nut - Jam	3
35	7-4150	Washer	3
36	44-6340	Pulley - Hub Spindle	3
37	46-8530	Assembly - Bearing	3
38	29-4820	Roller	4
39	323-6	Screw - Cap Hex. Hd.	2
40	57-0690	Pin - Cotter, Special	3
41	57-0680	Shaft - Short	2
42	57-0580	Bracket - Roller, Left Rear	1
43	3231-22	Bolt - Carriage, Short Neck	20
44	68-8340	Decal - Blade Bolt Torque	1
45	68-7260	Decal - Rear Weight 35#	1
46	43-8480	Decal - Danger	1
47	3290-224	Washer - Pyramidal	
48	57-0570	Skid - L.H.	
49	3256-24	Washer - Flat	
50	61-4160	Housing - Spindle	3
51	253-139	Seal	6
52	27-0950	Spacer	3

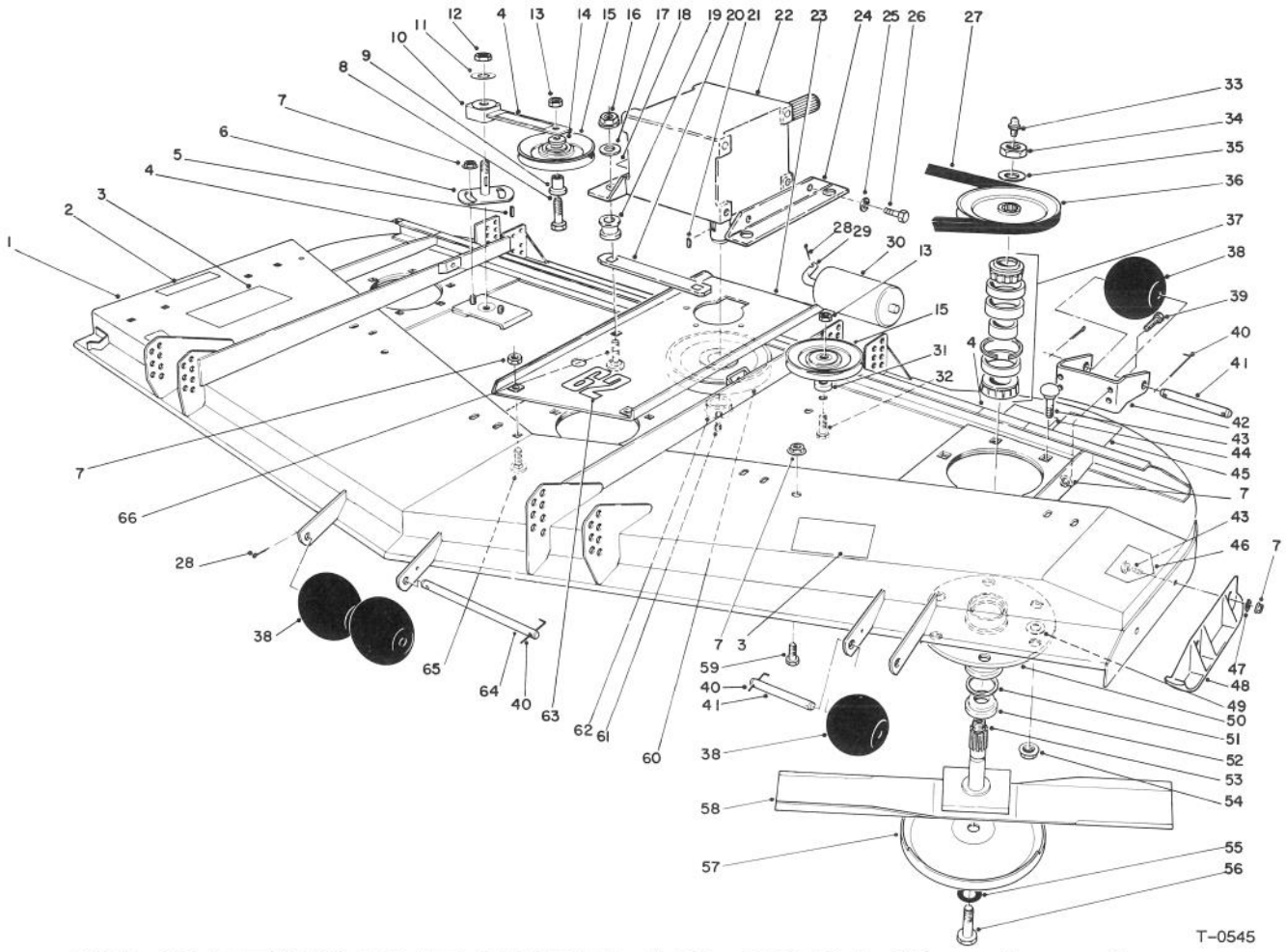

62" CUTTING UNIT MODEL NO. 30564 (Continued)

Ref. No.	Part No.	Description	No. Used
53	27-0920	Spindle - Shaft	3
54	32128-21	Nut - Flange	18
55	67-5770	Washer - Lock	3
56	44-2200	Screw - Cap, Blade	3
57	72-9361	Cup - Anti-Scalp	3
58	44-6250	Blade	3
59	323-4	Screw - Cap Hex. Hd.	2
60	63-9900	Pulley - Gear Box	1
61	3245-9	Screw - Set, Socket Hd.	2

Ref. No.	Part No.	Description	No. Used
62	27-6140	Bushing - Taper Lock (Incl. Ref. #61)	1
63	66-1630	Decal - 62	1
64	40-6400	Shaft - Long	1
65	3231-27	Bolt - Carriage	4
66	3231-26	Bolt - Carriage	4
*	44-6370	Assembly - Spindle (Incl. Ref. #33-37 & 50-53)	3

*Not Illustrated

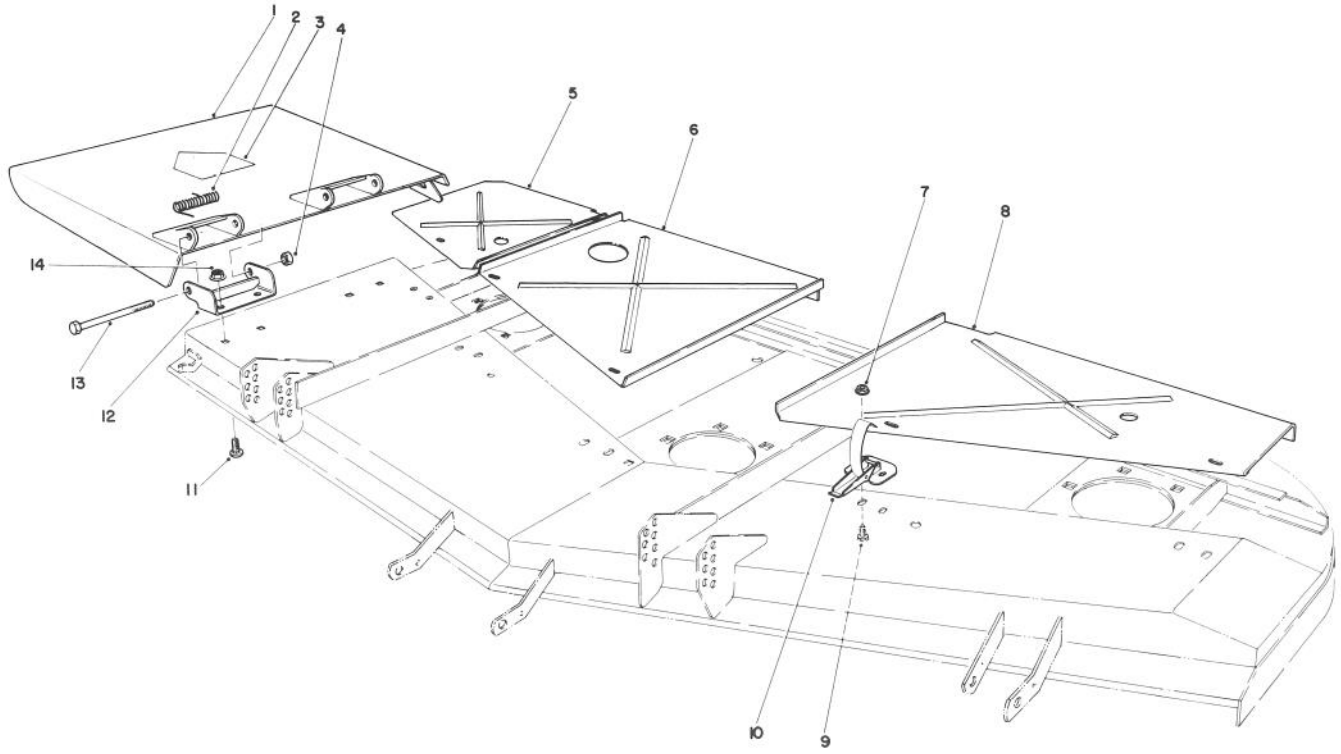

T-0560

62" CUTTING UNIT MODEL 30564 (Continued)

Ref. No.	Part No.	Description	No. Used
1	14-0909	Deflector (Incl. Ref. #3)	1
2	51-1550	Spring	2
3	43-8480	Decal - Danger	1
4	32153-5	Nut - Lock	2
5	63-9830	Cover - Deck R.H.	1
6	72-9320	Cover - Deck Center	1
7	32128-17	Nut - Flange	10
8	44-6290	Cover - Deck L.H.	1
9	3290-321	Screw - Hex. Slotted Hd.	10
10	249-21	Latch - Draw	5
11	3231-27	Bolt - Carriage	4
12	51-1530	Bracket - Hinge	2
13	325-17	Screw - Cap Hex. Hd.	2
14	3290-357	Nut - Lock	4

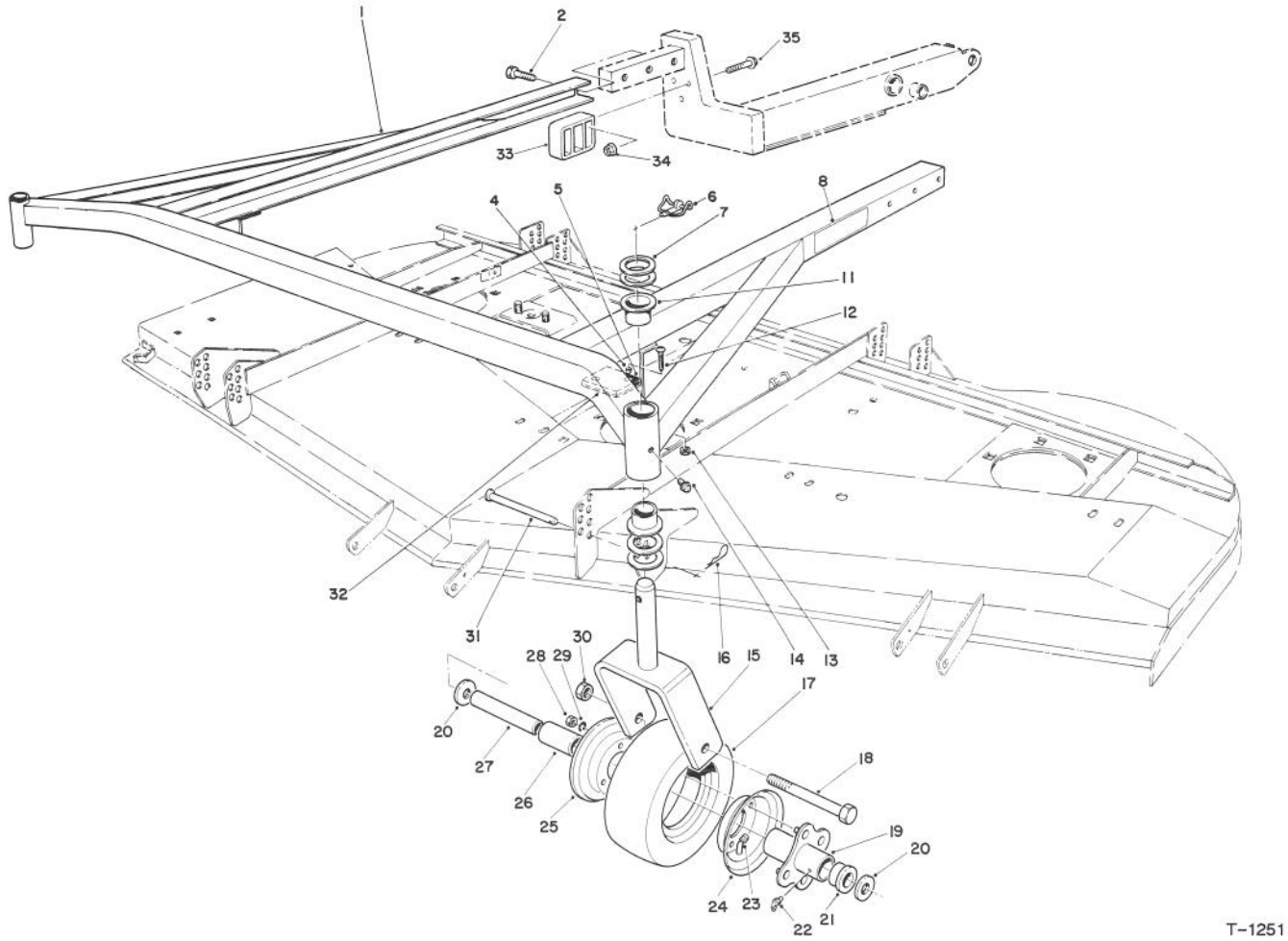

T-1251

62" CUTTING UNIT MODEL NO. 30564 (Continued)

Ref. No.	Part No.	Description	No. Used
1	83-4560	Frame (Incl. Ref. #9 & 10)	1
2	325-32	Screw - Cap Hex. Hd.	6
4	40-9520	Spacer - Split	4
5	40-0330	Cushion - Rubber	2
6	3290-384	Pin - Lynch	2
7	3-6781	Washer - Thrust	8
8	68-8360	Decal - H.O.C.	1
11	28-9290	Bushing - Special	4
12	32122-28	Screw - Mach. Truss Hd.	4
13	3296-2	Nut - Lock	4
14	302-5	Fitting - Grease	2
15	68-8900	Fork - Castor, Front	2
16	3290-355	Pin - Hair, Cotter	4
17	68-8960	Tire	2
18	325-19	Screw - Cap Hex. Hd.	2
19	68-8940	Hub - Center	2
20	3256-6	Washer - Flat	4

Ref. No.	Part No.	Description	No. Used
21	62-5580	Bushing	4
22	302-61	Fitting - Grease	2
23	68-8950	Tube - w/Valve	2
24	68-8920	Wheel Half - Female	2
25	68-8930	Wheel Half - Male	2
26	62-5570	Bearing - Roller	2
27	68-8980	Bushing - Spanner	2
28	3217-6	Nut - Hex.	8
29	3253-4	Washer - Lock	8
30	32153-5	Nut - Lock	2
31	283-55	Pin - Clevis	4
32	42-6200	Shim - Cushion	3
33	83-4520	Cradle - Rear	2
34	32128-40	Nut - Flange	6
35	3234-19	Screw - Flange Hd.	6
*	13-3869	Assembly - Caster Wheel (Incl. Ref. #17, 19, 21-26 & 28-29)	2

*Not Illustrated

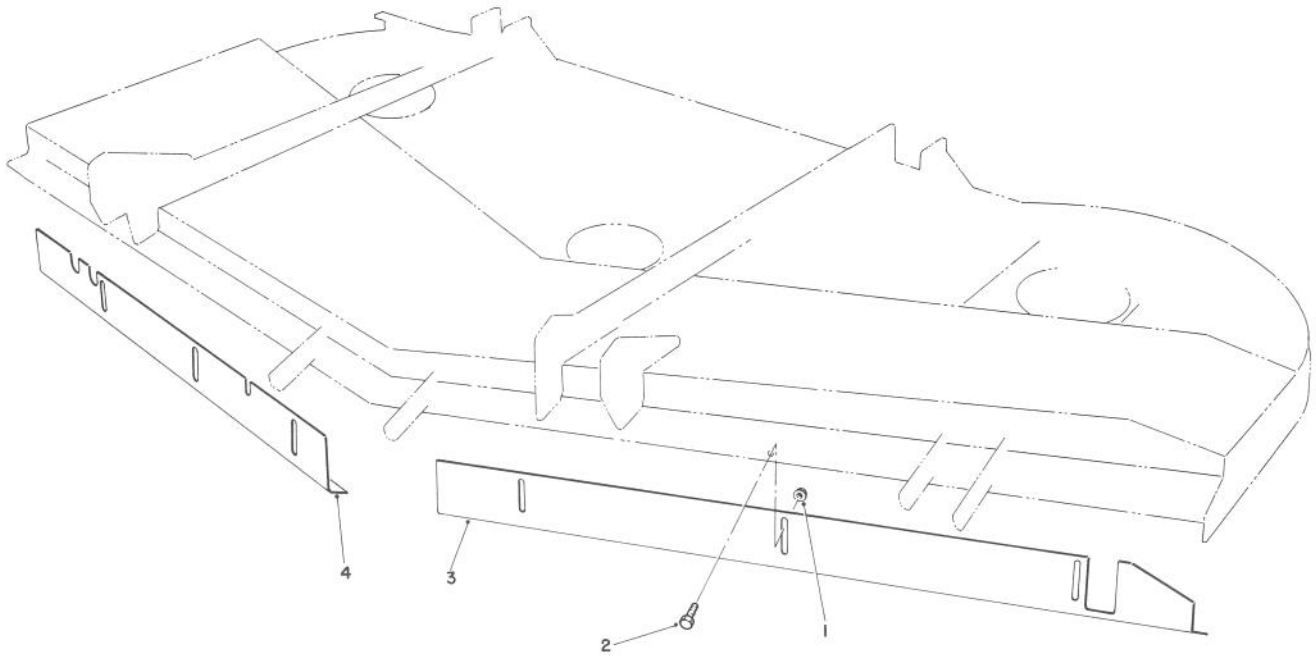

T-1212

62" BAFFLE KIT PART NO. 82-8800
(Used on Cutting Unit Model 30564)

Ref. No.	Part No.	Description	No. Used
1	32128-20	Nut - Flange	6
2	322-3	Screw	6
3	82-8810	Baffle - Front, L.H.	1

Ref. No.	Part No.	Description	No. Used
4	82-8820	Baffle - Front, R.H.	1

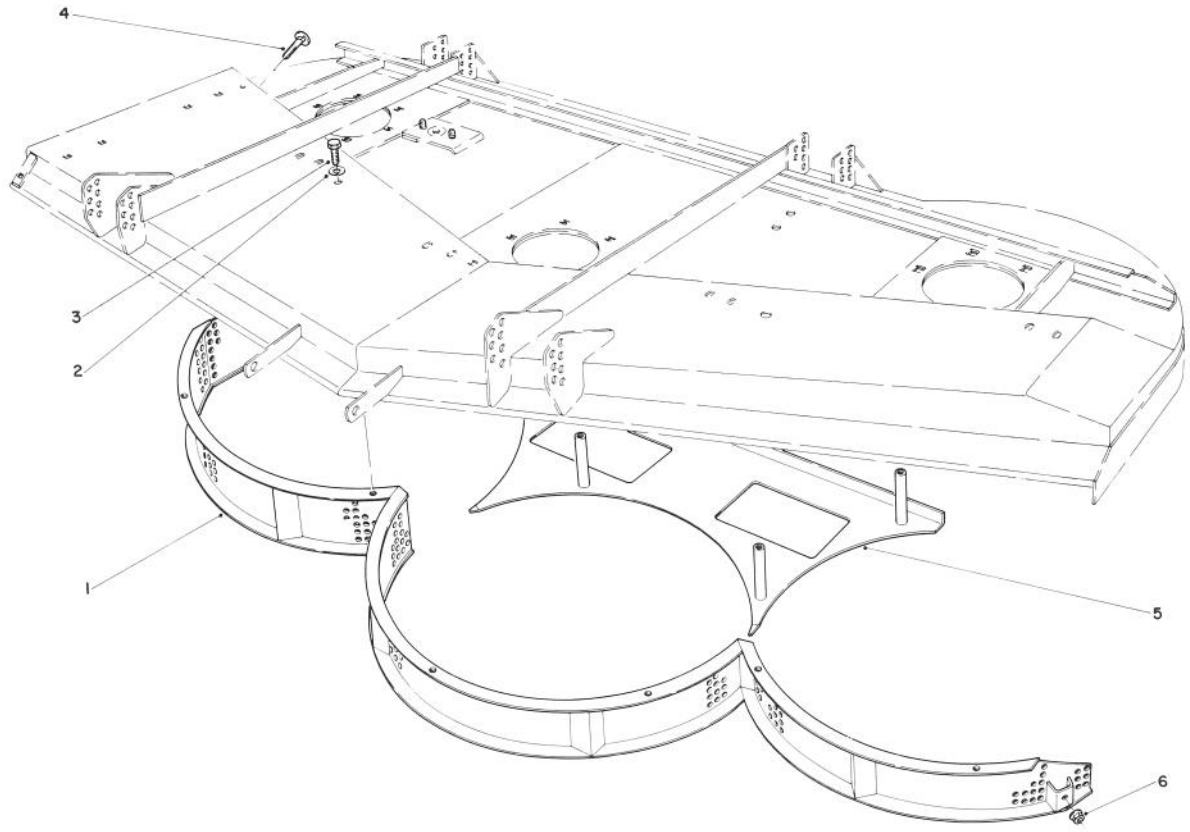

T-0598

62" MULCHER KIT MODEL NO. 30792 (Optional)
For Cutting Unit Model No. 30564

Ref. No.	Part No.	Description	No. Used
1	46-3010	Screen - Mulcher	1
2	3253-21	Washer - Lock	10
3	323-4	Screw - Cap Hex. Hd.	11
4	3230-2	Bolt - Carriage	1
5	46-3150	Shelf - Bottom, Rear	1
6	3290-357	Nut - Lock, Flange	6

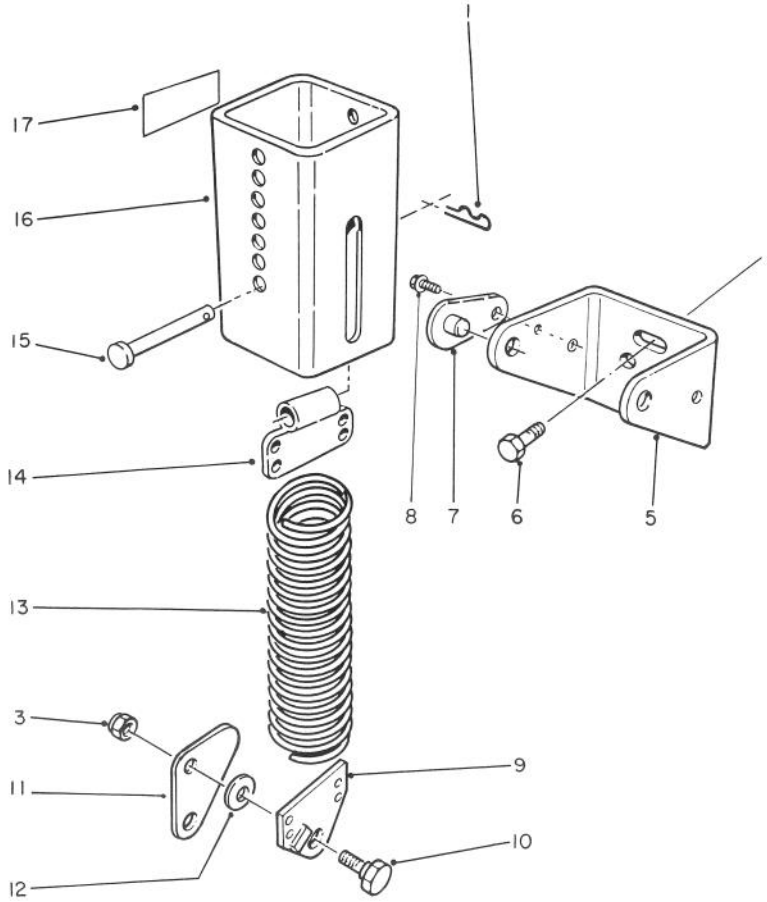

T-1217

62" COUNTER BALANCE KIT MODEL NO. 30713**

Ref. No.	Part No.	Description	No. Used
1	3290-355	Pin - Hair, Cotter	2
3	3296-44	Nut - Lock	4
5	66-8230	Bracket - Mounting	2
6	3234-11	Screw - Flange	4
7	70-7920	Assembly - Pin, Lock	4
8	12-3270	Screw - Self Tapping	4
9	66-8420	End - Spring	2
10	46-3380	Bolt - Shoulder	4
11	66-8440	Link - Knee	2

Ref. No.	Part No.	Description	No. Used
12	3256-24	Washer - Flat	4
13	66-8390	Spring - Extension (Heavy Duty) Trim Side	1
*	66-8410	Spring - Extension (Light Duty) Discharge Side	1
14	70-7940	End - Spring	2
15	283-69	Pin - Clevis	2
16	70-7970	Assembly - Cover, Spring	2
17	55-4300	Decal - Caution	4

*Not Illustrated **Furnished with 62" Cutting Unit Model No. 30564

Note: Light duty spring (66-8410) used on discharge side without 62" Blower Kit Cutting Unit.

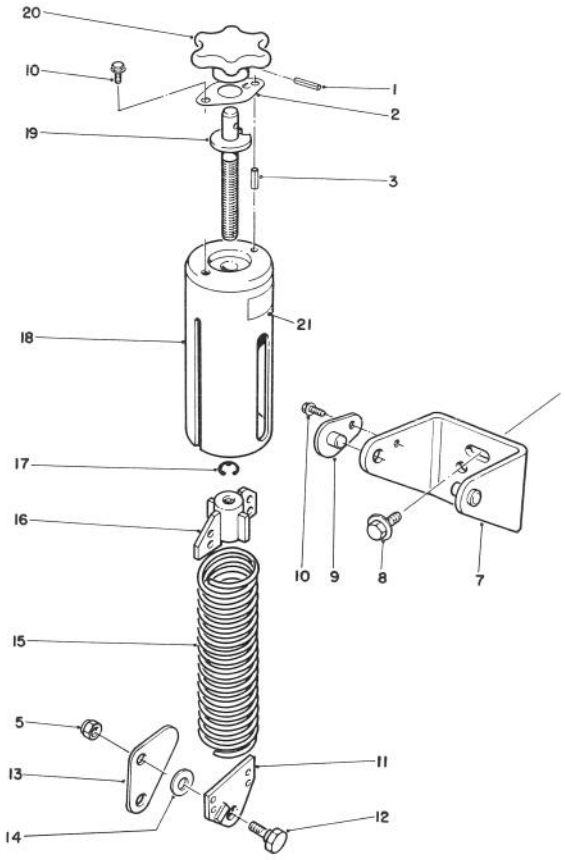

T-1218

62" WEIGHT TRANSFER MODEL NO. 30703

Ref. No.	Part No.	Description	No. Used
1	32121-12	Pin - Roll	2
2	66-8330	Spring - Detent	2
3	32121-13	Pin - Roll	2
5	3296-44	Nut - Lock	4
7	66-8220	Bracket	2
8	3234-11	Screw - Flange	4
9	66-8250	Pin - Lock	2
10	12-3270	Screw - Self-Tap	4
11	66-8420	End - Spring	2
12	46-3380	Bolt - Shoulder	4
13	66-8440	Link - Knee	2
14	3256-24	Washer - Flat	4
15	66-8390	Spring - (Heavy Duty) Trim Side	1
*	66-8410	Spring - (Light Duty) Discharge Side	1

Ref. No.	Part No.	Description	No. Used
16	66-8340	End - Spring	2
17	32120-47	E-Ring	2
18	66-8300	Assembly - Cover	2
19	66-8270	Shaft	2
20	59-4380	Knob	2
21	55-4300	Decal - Caution	4
*	66-8400	Assy. - Counterbalance Trim Side (Incl. Ref. #1-3, 10-12 & 15-21)	1
*	66-8401	Assy. - Counterbalance Discharge Side (Incl. Ref. #1-3, 10-12 & 15-21)	1

*Not Illustrated

Note: Light duty spring (66-8410) & Counter Balance Assembly (66-8401) used on discharge side without 62" Blower Kit.

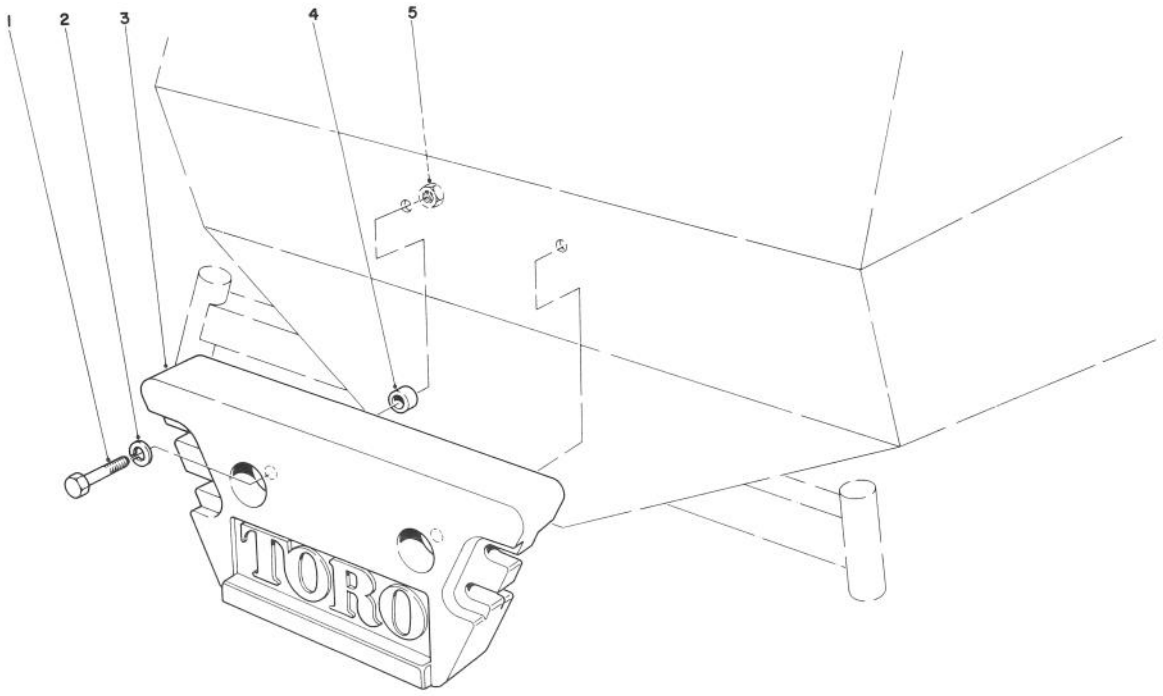

T-0562

REAR WEIGHT

Ref. No.	Part No.	Description	No. Used
†1	325-8	Screw - Cap Hex .Hd.	2
†2	3253-7	Washer - Lock	2
†3	24-5790	Weight - Rear	1
†4	57-4230	Spacer	2
†5	3217-9	Nut - Hex.	2

†One weight required on Groundsmastser 224 with 62" Cutting Unit. Parts must be ordered separately.

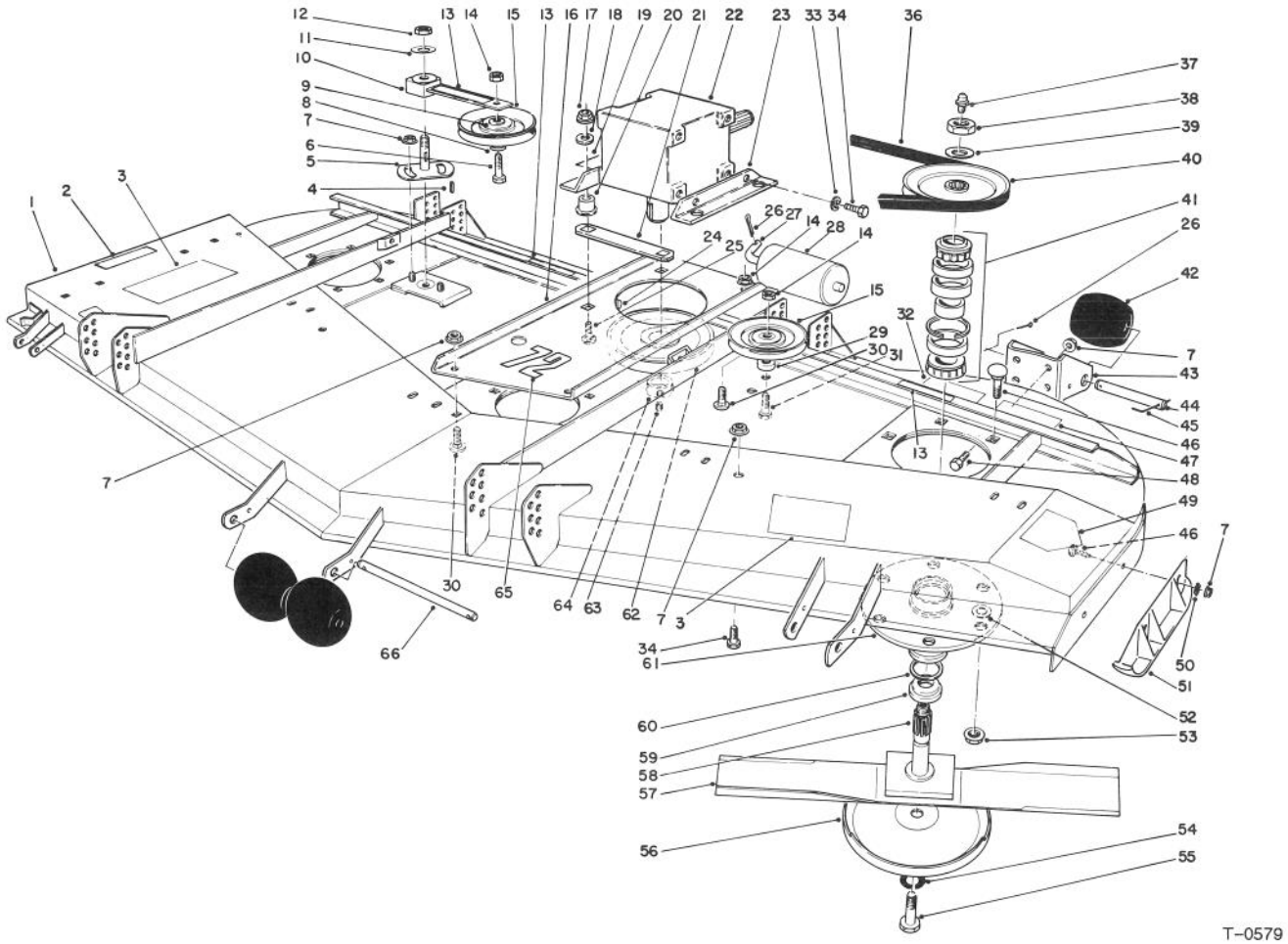

T-0579

72" CUTTING UNIT MODEL NO. 30575

Ref. No.	Part No.	Description	No. Used
1	57-0300	Housing	1
2	66-6380	Decal - Deflector Missing	1
3	66-1340	Decal - Danger	2
4	5-1077	Key - Square	1
5	44-6300	Idler Plate	1
6	3211-8	Screw - Cap Hex. Hd.	1
7	3290-357	Nut - Lock	14
8	65-5950	Bushing - Pulley	2
9	7-0081	Washer - Special	2
10	27-8580	Assembly - Idler Socket & Bushing	1
11	3256-27	Washer - Flat	1
12	3296-33	Nut - Lock	1
13	67-5360	Decal - Shield Missing	3
14	3296-5	Nut - Lock	2
15	65-5940	Pulley - Idler	2
16	68-8530	Base - Gear Box	1
17	32153-2	Nut - Lock	4
18	63-8410	Washer-Lock	4
19	70-2560	Decal - Lube	1
20	63-9750	Mount - Isolation	4
21	68-9890	Cover - Gear Box, Front	1
22	68-6810	Gear Box	1
23	68-8560	Bracket - Gear Box	2
24	3257-5	Key - Woodruff	1
25	3231-26	Bolt - Carriage	4

Ref. No.	Part No.	Description	No. Used
26	3272-11	Pin - Cotter	7
27	40-0340	Shaft - Rear Roller	2
28	36-1740	Roller - Deck	2
29	44-6390	Spacer	1
30	3231-27	Bolt - Carriage	4
31	3211-9	Screw - Cap Hex. Hd.	1
32	68-8340	Decal - Blade Bolt Torque	1
33	3253-21	Washer - Lock	4
34	323-4	Screw - Cap Hex. Hd.	6
36	57-0240	V-Belt	1
37	302-2	Fitting - Grease	3
38	32146-20	Nut - Hex. Jam	3
39	7-4150	Washer	3
40	57-0560	Pulley	3
41	46-8530	Assembly - Bearing	3
42	29-4820	Roller	6
43	57-0580	Bracket - Roller Left Rear	1
*	57-0590	Bracket - Roller Right Rear	1
44	57-0680	Shaft - Roller	4
45	57-0690	Pin - Cotter, Special	5
46	3231-22	Bolt - Carriage	20
47	68-7270	Decal - Rear Weight 70#	1
48	323-7	Screw - Cap Hex. Hd.	4
49	43-8480	Decal - Danger	1
50	3290-224	Washer - Lock	2
51	57-0570	Skid	1

*Not Illustrated

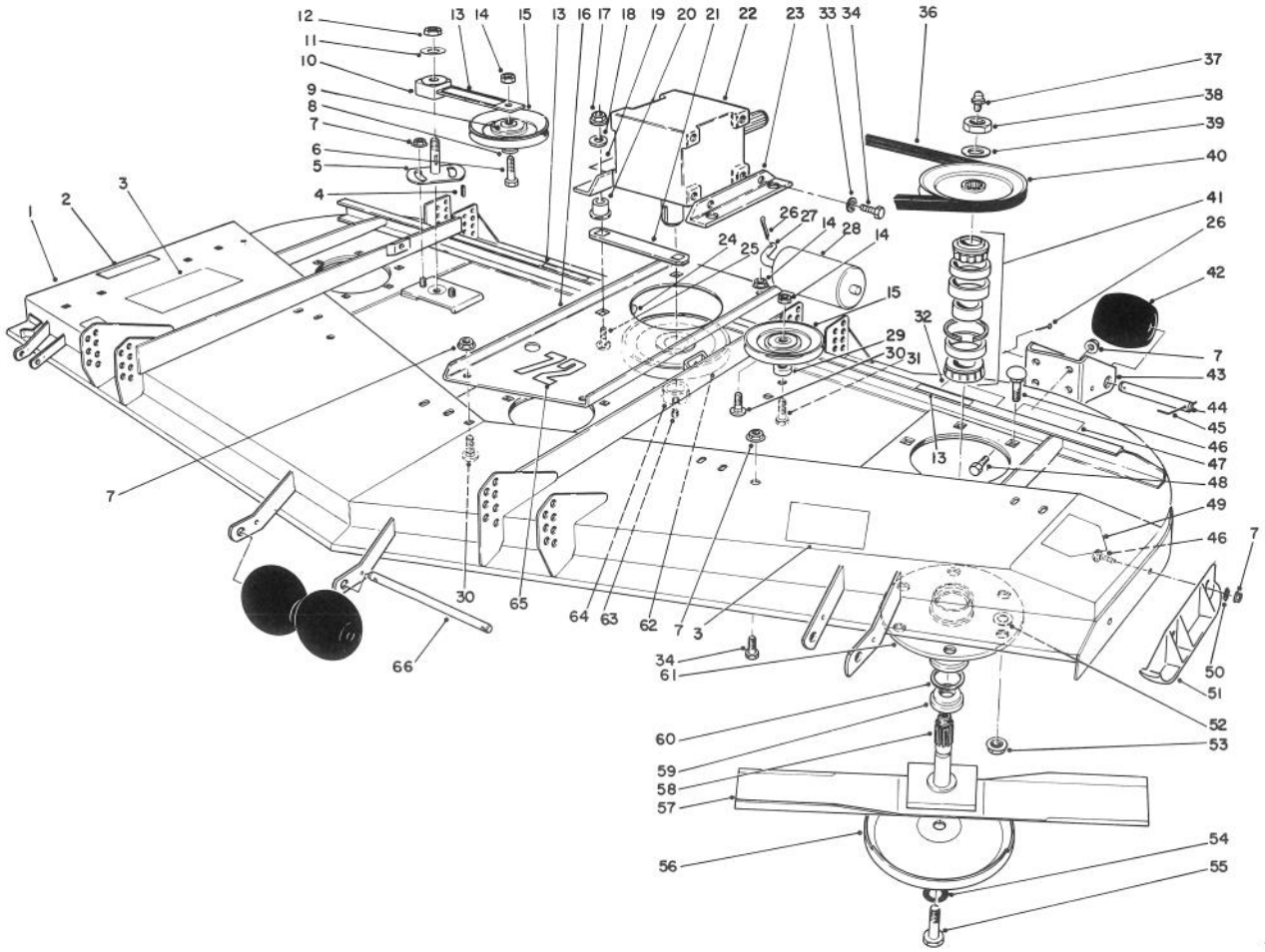

T-0579

72" CUTTING UNIT MODEL NO. 30575 (Continued)

Ref. No.	Part No.	Description	No. Used
52	3256-24	Washer - Flat	A/R
53	32128-21	Nut - Flange	18
54	67-5770	Washer	3
55	44-2200	Screw - Cap, Blade	3
56	72-9361	Cup - Anti-Scalp	3
57	57-0250	Blade	3
58	27-0920	Spindle - Shaft	3
59	27-0950	Spacer - Spindle Bearing	3
60	253-139	Seal - Wave	6

Ref. No.	Part No.	Description	No. Used
61	61-4160	Housing - Spindle	3
62	63-9900	Pulley - Gear Box	1
63	3245-9	Screw - Set, Socket Hd.	2
64	27-6140	Bushing - Taper Lock (Incl. Ref. #63)	1
65	57-0280	Decal - 72	1
66	40-6400	Shaft - Roller	1
*	57-0260	Assy. - Spindle Housing (Incl. Ref. #37-41 & 58-61)	3

*Not Illustrated

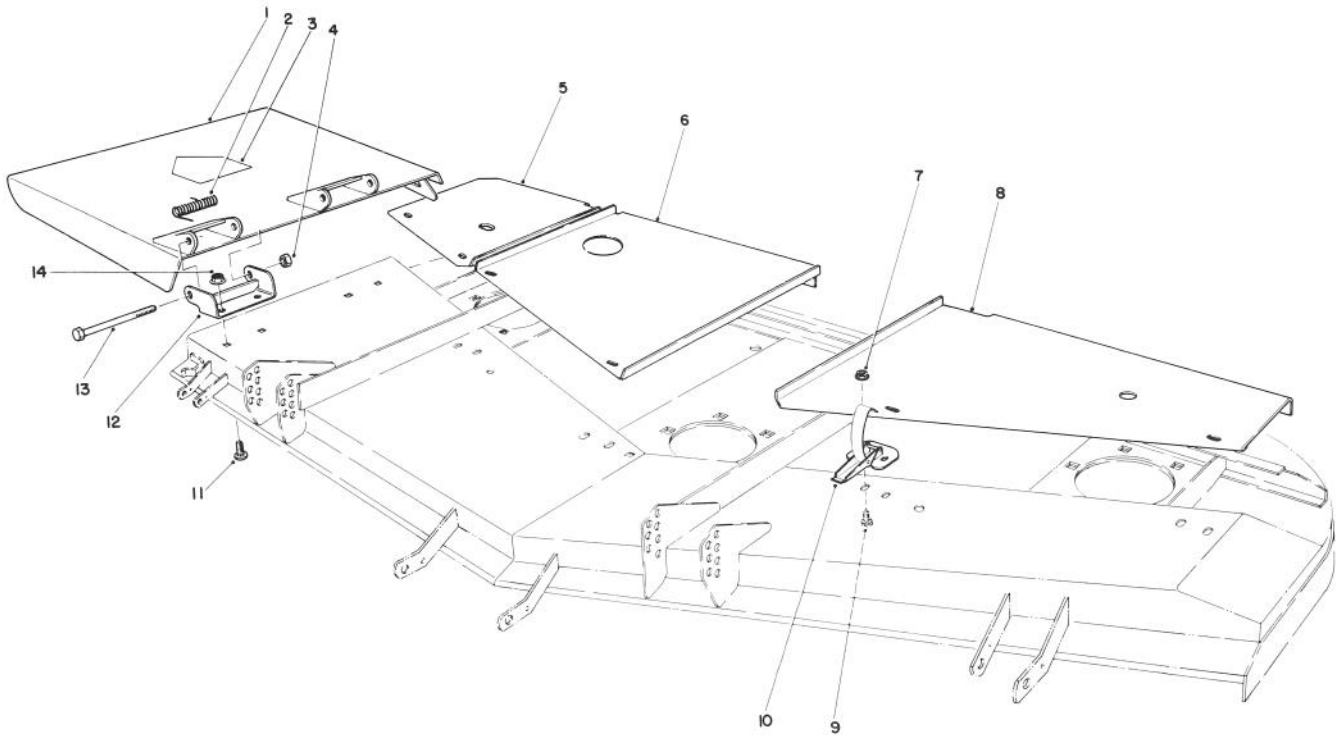

T-0589

72" CUTTING UNIT MODEL NO. 30575 (Continued)

Ref. No.	Part No.	Description	No. Used
1	14-0909	Deflector (Incl. Ref. #3)	1
2	51-1550	Spring	2
3	43-8480	Decal - Danger	1
4	32153-5	Nut - Lock	2
5	57-0230	Cover - R.H.	1
6	57-0210	Cover - Center	1
7	32128-17	Nut - Lock	12

Ref. No.	Part No.	Description	No. Used
8	57-0220	Cover - L.H.	1
9	3290-321	Screw - Hex Slotted Hd.	12
10	249-21	Latch - Draw	6
11	3231-27	Bolt - Carriage	4
12	51-1530	Bracket - Hinge	2
13	325-17	Screw - Cap Hex. Hd.	2
14	3290-357	Nut - Flange	4

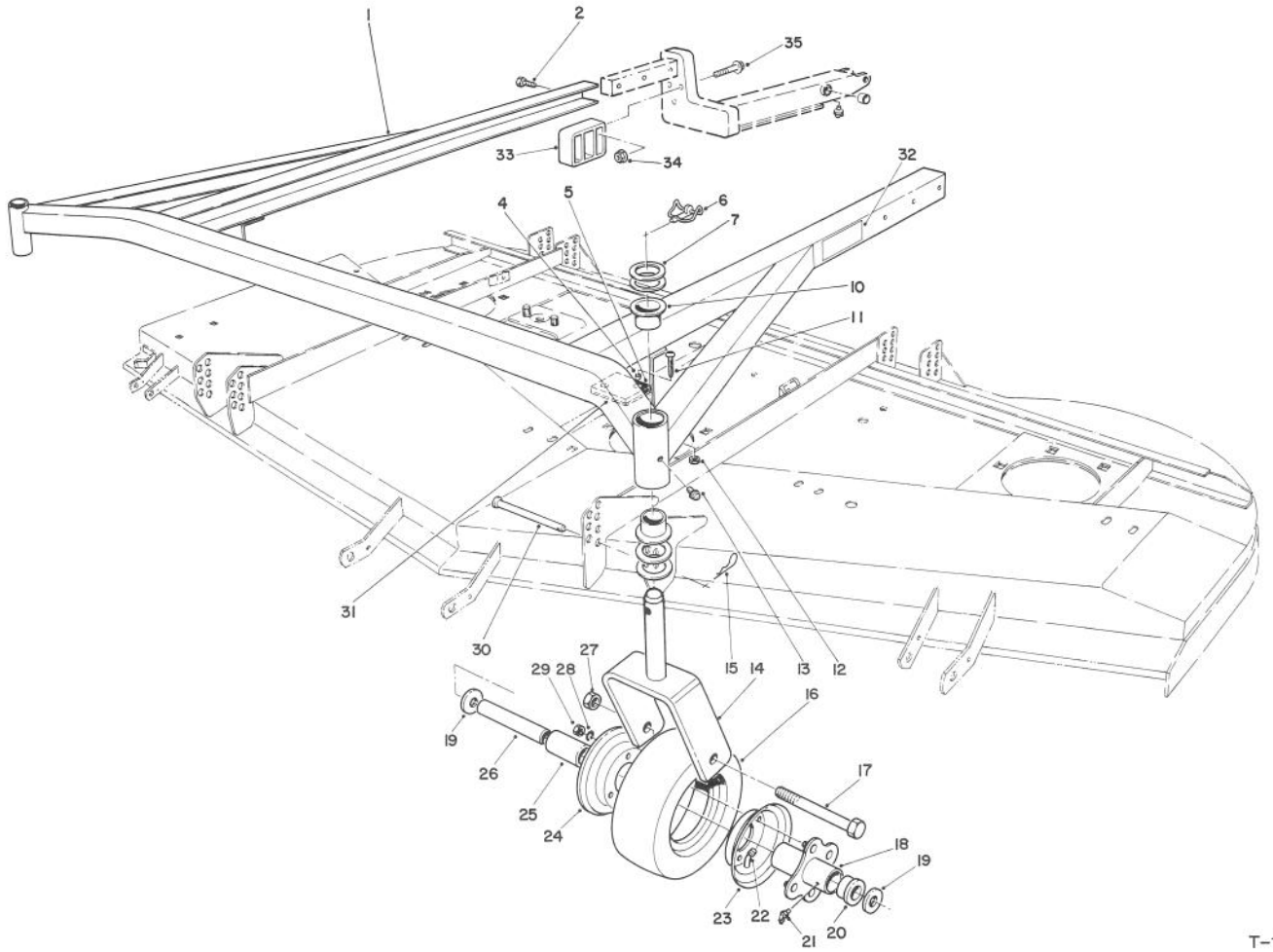

T-1252

72" CUTTING UNIT MODEL NO. 30575 (Continued)

Ref. No.	Part No.	Description	No. Used
1	83-4570	Carrier Frame (Incl. Ref. #10)	1
2	325-32	Screw - Cap Hex. Hd.	6
4	40-9520	Spacer - Split	4
5	40-0330	Cushion - Rubber	2
6	3290-384	Pin - Lynch	2
7	3-6781	Washer - Thrust	8
10	28-9290	Bushing - Special	4
11	32122-28	Screw - Mach. Truss Hd.	4
12	3296-2	Nut - Lock	4
13	302-5	Fitting - Grease	2
14	68-8900	Fork - Castor	2
15	3290-355	Pin - Hair, Cotter	4
16	68-8960	Tire	2
17	325-19	Screw - Cap Hex. Hd.	2
18	68-8940	Hub - Center	2
19	3256-6	Washer - Flat	4
20	62-5580	Bushing	4
21	302-61	Fitting - Grease	2

Ref. No.	Part No.	Description	No. Used
22	68-8950	Tube w/Valve	2
23	68-8920	Wheel Half - Female	2
24	68-8930	Wheel Half - Male	2
25	62-5570	Bearing - Roller	2
26	68-8980	Bushing - Spanner	2
27	32153-5	Nut - Lock	2
28	3253-4	Washer - Lock	8
29	3217-6	Nut - Hex.	8
30	283-55	Pin - Clevis	4
31	42-6200	Shim - Cushion	A/R
32	68-8360	Decal - Height Of Cut	1
33	83-4520	Cradle - Rear	2
34	32128-40	Nut - Flange	6
35	3234-19	Screw - Flange Hd.	6
*	13-3869	Assembly - Castor Wheel (Incl. Ref. #16 -18, 20-25 & 28-29)	1 2

*Not Illustrated

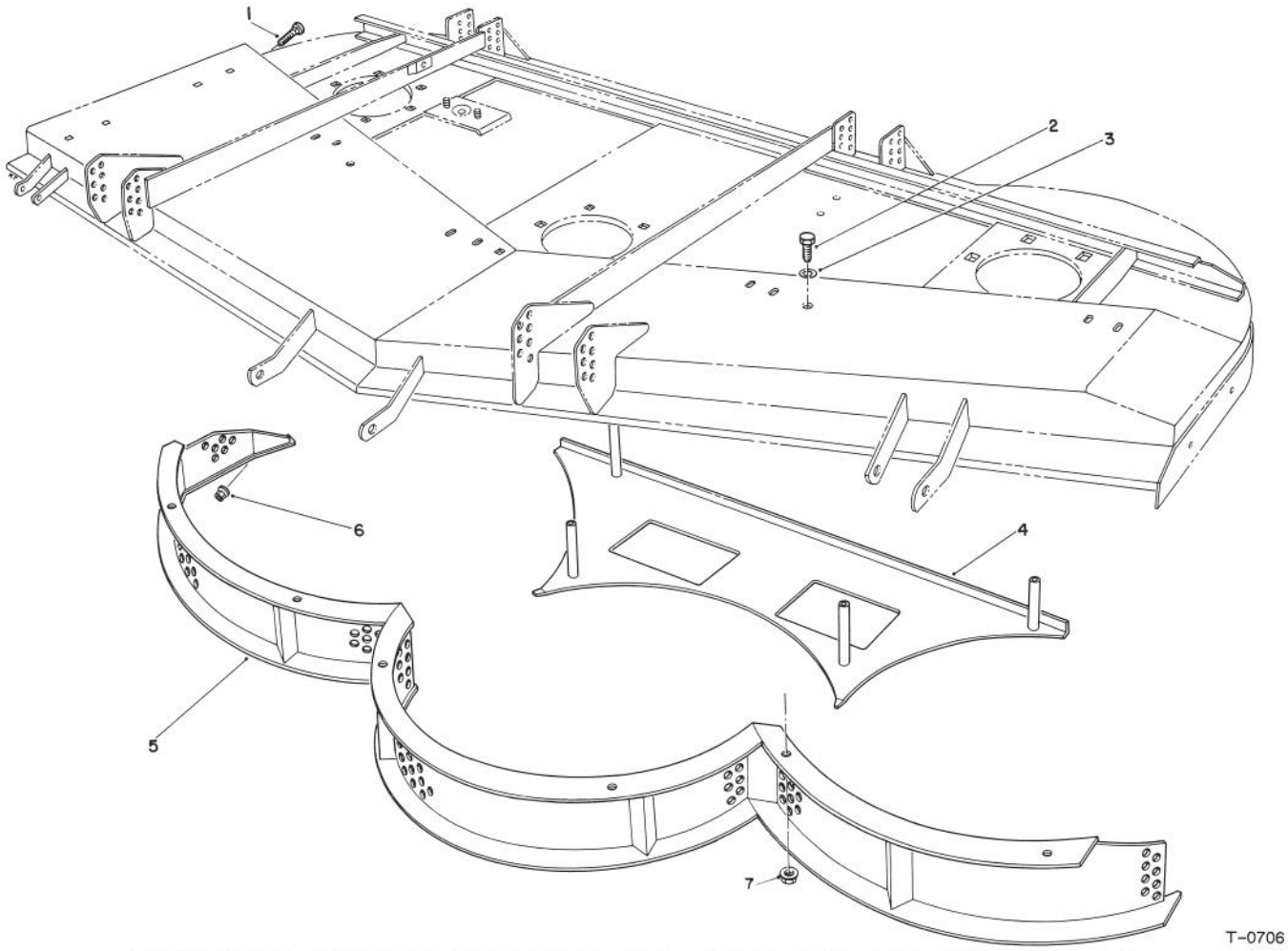

T-0706

72" MULCHER KIT MODEL NO. 30779 (Optional)
For Cutting Unit Model No. 30575

Ref. No.	Part No.	Description	No. Used
1	3230-2	Bolt - Carriage	1
2	323-4	Screw - Cap Hex. Hd.	10
3	3253-21	Washer - Lock	10
4	57-0140	Shelf - W.A.	1

Ref. No.	Part No.	Description	No. Used
5	57-0030	Screen - W.A.	1
6	32128-20	Nut - Flange	1
7	3290-357	Nut - Flange	6

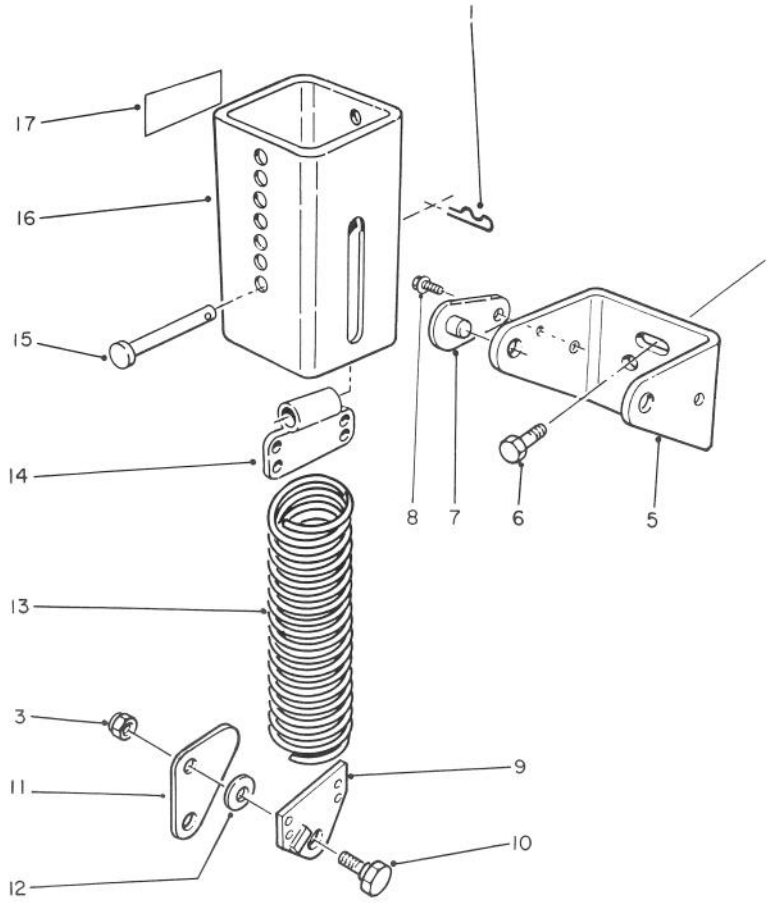

T-1217

72" COUNTER BALANCE KIT MODEL NO. 30714*

Ref. No.	Part No.	Description	No. Used
1	3290-355	Pin - Hair, Cotter	2
3	3296-44	Nut - Lock	4
5	66-8230	Bracket - Mounting	2
6	3234-11	Screw - Flange	4
7	70-7920	Assembly - Pin, Lock	4
8	12-3270	Screw - Self Tapping	4
9	66-8420	End - Spring	2
10	46-3380	Bolt - Shoulder	4

Ref. No.	Part No.	Description	No. Used
11	66-8440	Link - Knee	2
12	3256-24	Washer - Flat	4
13	66-8390	Spring - Extension	2
14	70-7940	End - Spring	2
15	283-69	Pin - Clevis	2
16	70-7970	Assembly - Spring Cover	2
17	55-4300	Decal - Caution	4

*Furnished with 72" Cutting Unit Model No. 30575.

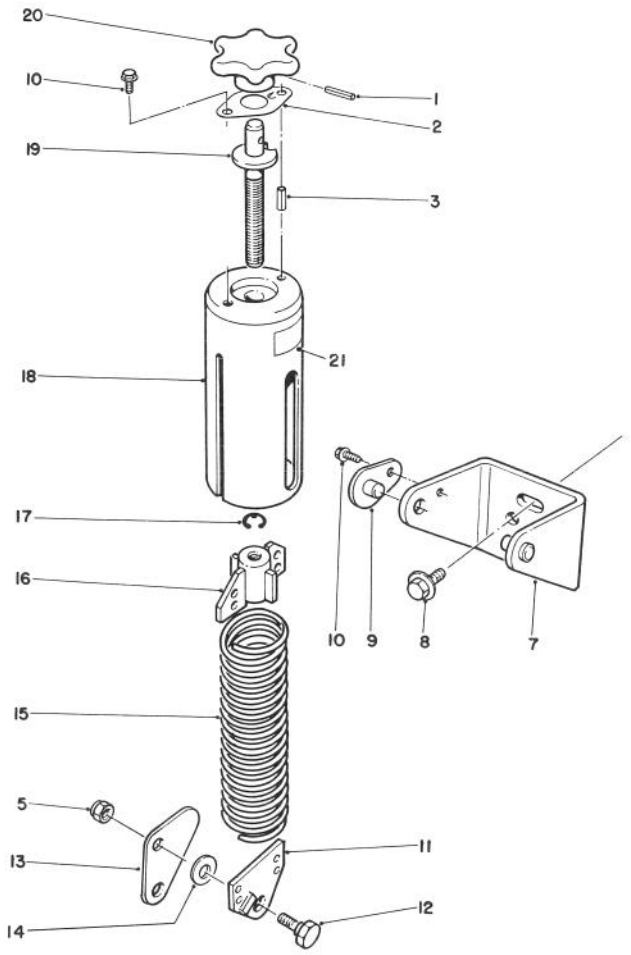

T-1218

72" WEIGHT TRANSFER KIT MODEL NO. 30704

Ref. No.	Part No.	Description	No. Used
1	32121-12	Pin - Roll	2
2	66-8330	Spring - Detent	2
3	32121-13	Pin - Roll	2
5	3296-44	Nut - Lock	4
7	66-8220	Bracket	2
8	3234-11	Screw - Flange	4
9	66-8250	Pin - Lock	2
10	12-3270	Screw - Self-Tap	4
11	66-8420	End - Spring	2
12	46-3380	Bolt - Shoulder	4
13	66-8440	Link - Knee	2

Ref. No.	Part No.	Description	No. Used
14	3256-24	Washer - Flat	4
15	66-8390	Spring - Heavy Duty	2
16	66-8340	End - Spring	2
17	32120-47	E-Ring	2
18	66-8300	Assembly - Cover	2
19	66-8270	Shaft	2
20	59-4380	Knob	2
21	55-4300	Decal - Caution	4
*	66-8400	Assy. - Counterbalance (Incl. Ref. #1-3, 10-12 & 15-21)	2

*Not Illustrated

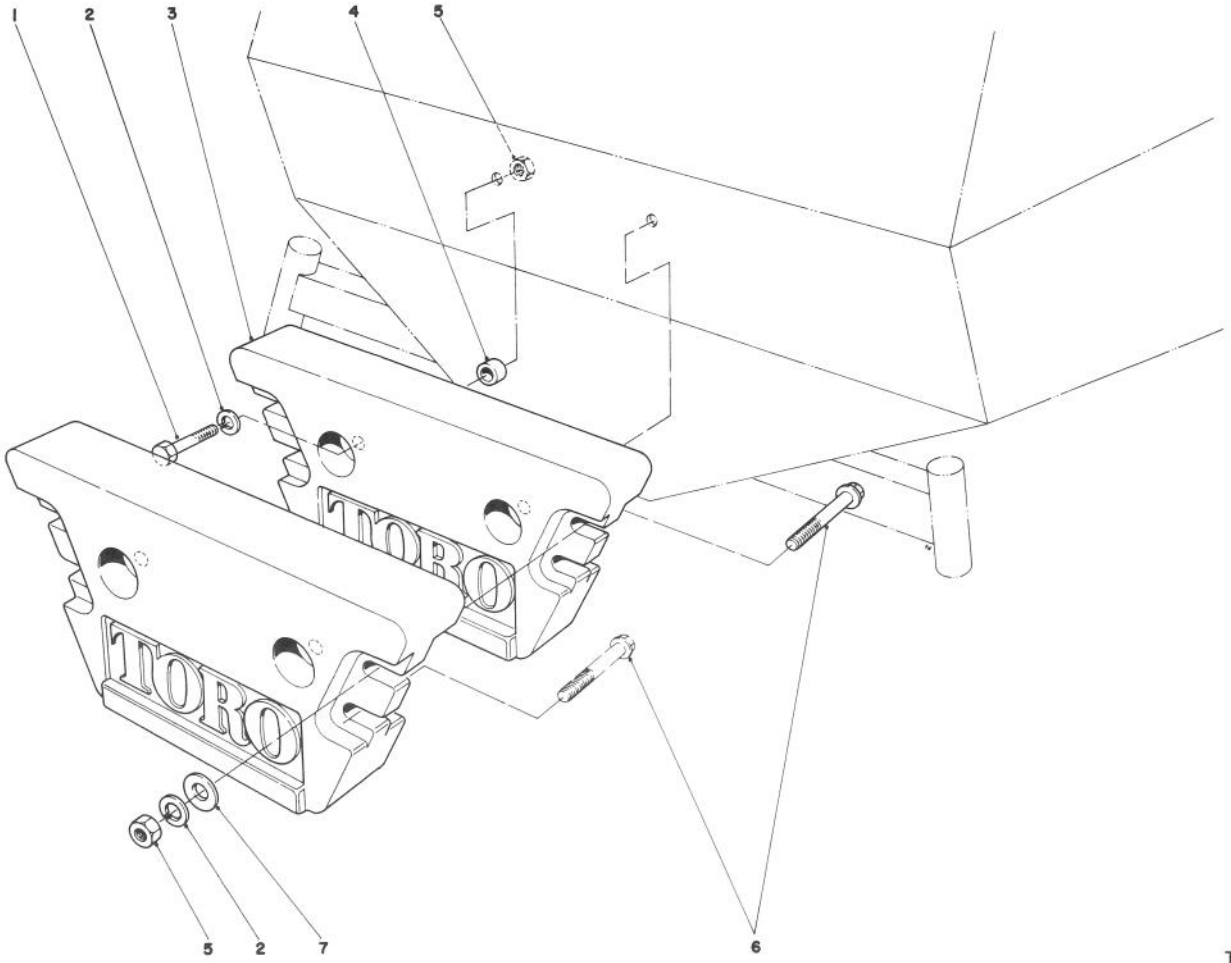

T-0630

†REAR WEIGHT KIT NO. 24-5780

Ref. No.	Part No.	Description	No. Used
1	325-8	Screw - Cap Hex. Hd.	2
2	3253-7	Washer - Lock	6
3	24-5790	Weight - Rear	2
4	57-4230	Spacer	2

Ref. No.	Part No.	Description	No. Used
5	3217-9	Nut - Hex.	6
6	325-14	Screw - Cap Hex. Hd.	4
7	3256-26	Washer - Flat	8

†One kit (2 weights) required on Groundsmaster 224 with 72" Cutting Unit.

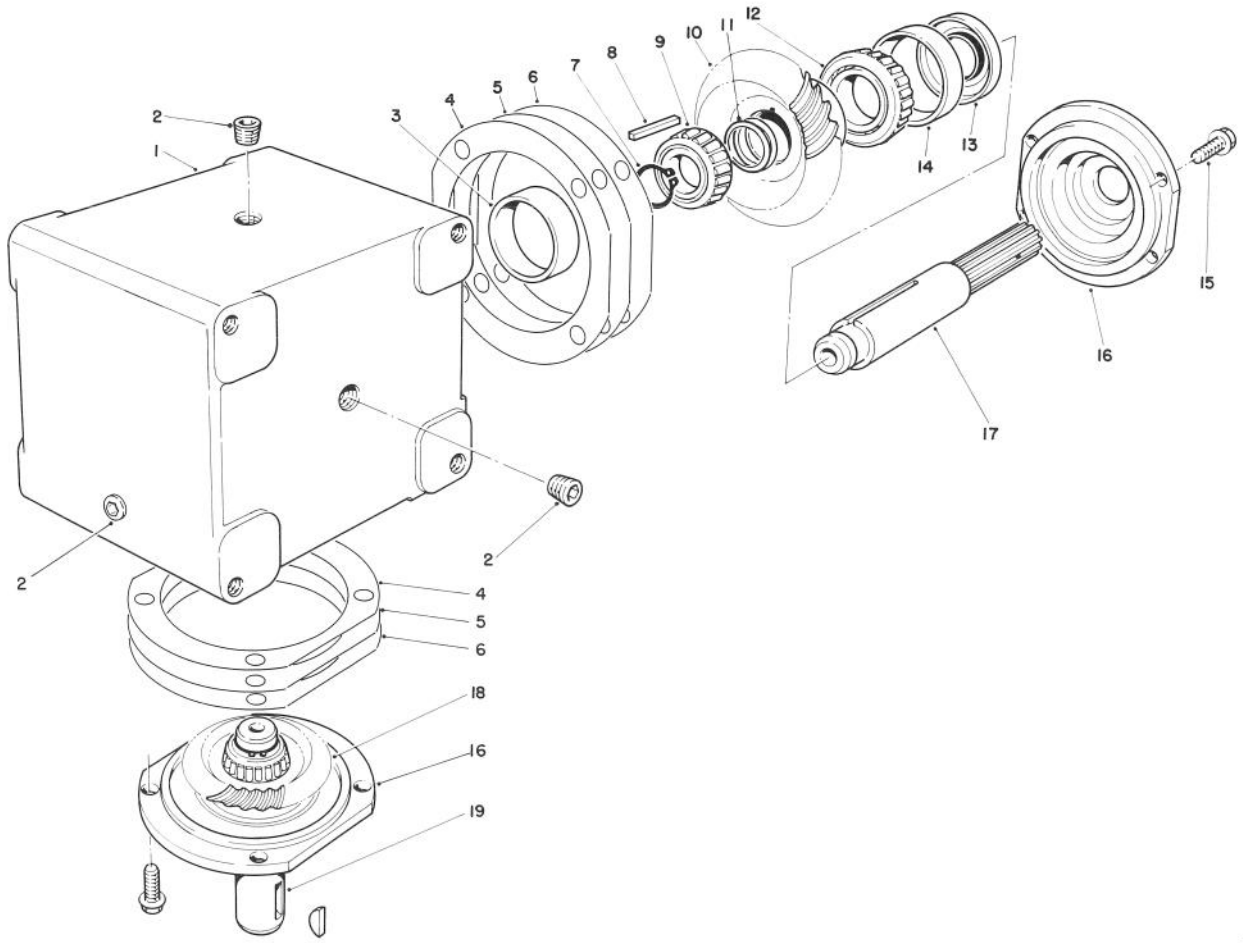

T-0977

GEAR BOX ASSEMBLY NO. 68-6810

Ref. No.	Part No.	Description	No. Used
1	68-7030	Housing	1
2	62-3490	Plug - Pipe (Solid)	4
3	62-3360	Cup - Bearing	2
4	62-3420	Gasket (.015)	A/R
5	62-3430	Gasket (.005)	A/R
6	62-3440	Gasket (.003)	A/R
7	68-7070	Ring - Retaining	2
8	62-3380	Key	2
9	62-3370	Cone - Bearing	2
10	68-7080	Gear	1

Ref. No.	Part No.	Description	No. Used
11	72-9370	Shim (.020)	4
12	62-3330	Cone - Gear	1
13	62-3400	Seal	2
14	62-3340	Cup - Bearing	2
15	62-3310	Screw - Cap	8
16	62-3410	Cap	2
17	68-7040	Shaft	1
18	68-7060	Gear	1
19	68-7050	Shaft	1

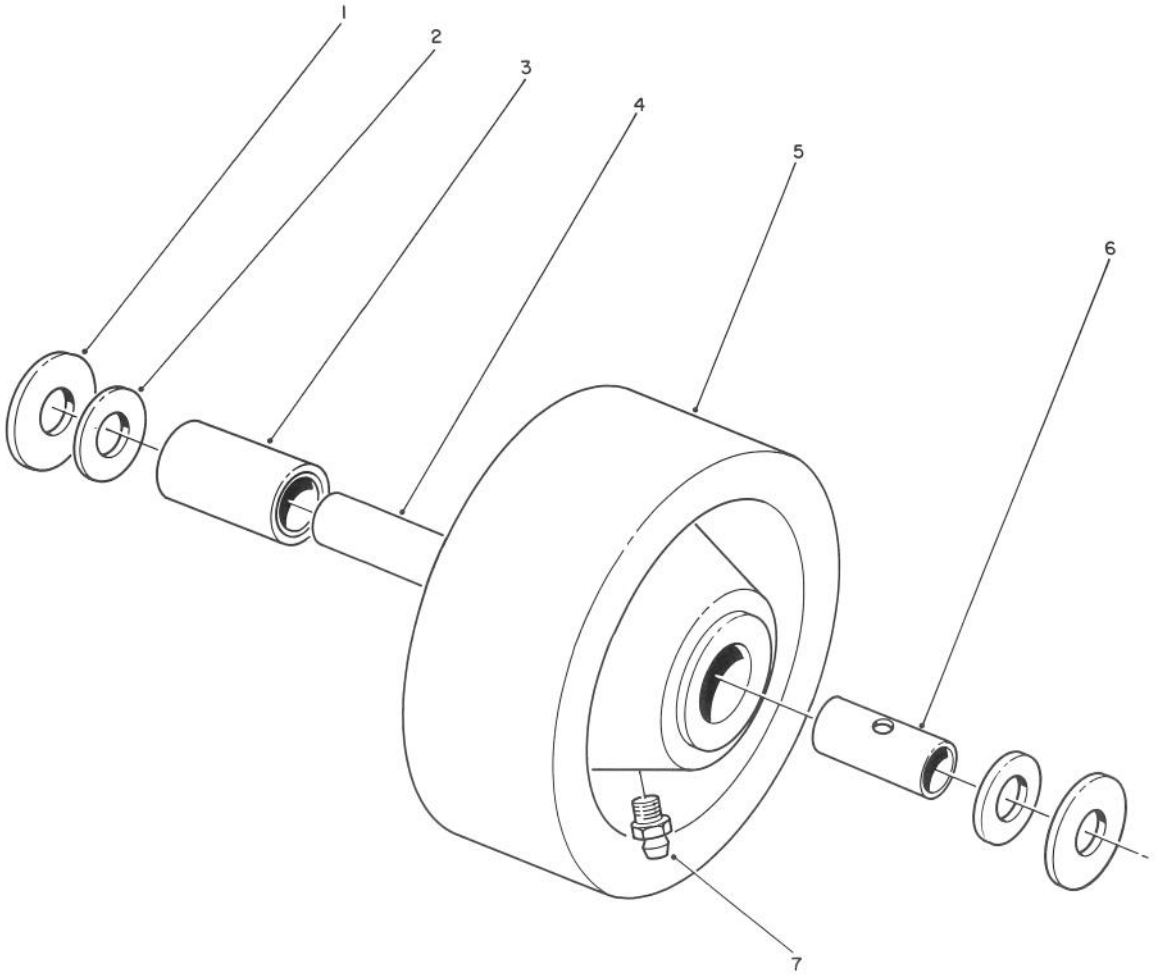

T-0633

PHENOLIC WHEEL ASSEMBLY NO. 27–1050 (Optional)

Ref. No.	Part No.	Description	No. Used
1	27–1170	Washer – Thrust	2
2	27–1180	Retainer – Bearing	2
3	27–121 0	Bearing – Roller	1
†4	68–8980	Bushing – Spanner	1

Ref. No.	Part No.	Description	No. Used
5	27–1190	Wheel – Caster	1
6	27–1200	Bushing – Spanner	1
7	302–55	Fitting – Grease	1

†Must be ordered separately for use with 1/2" bolt.

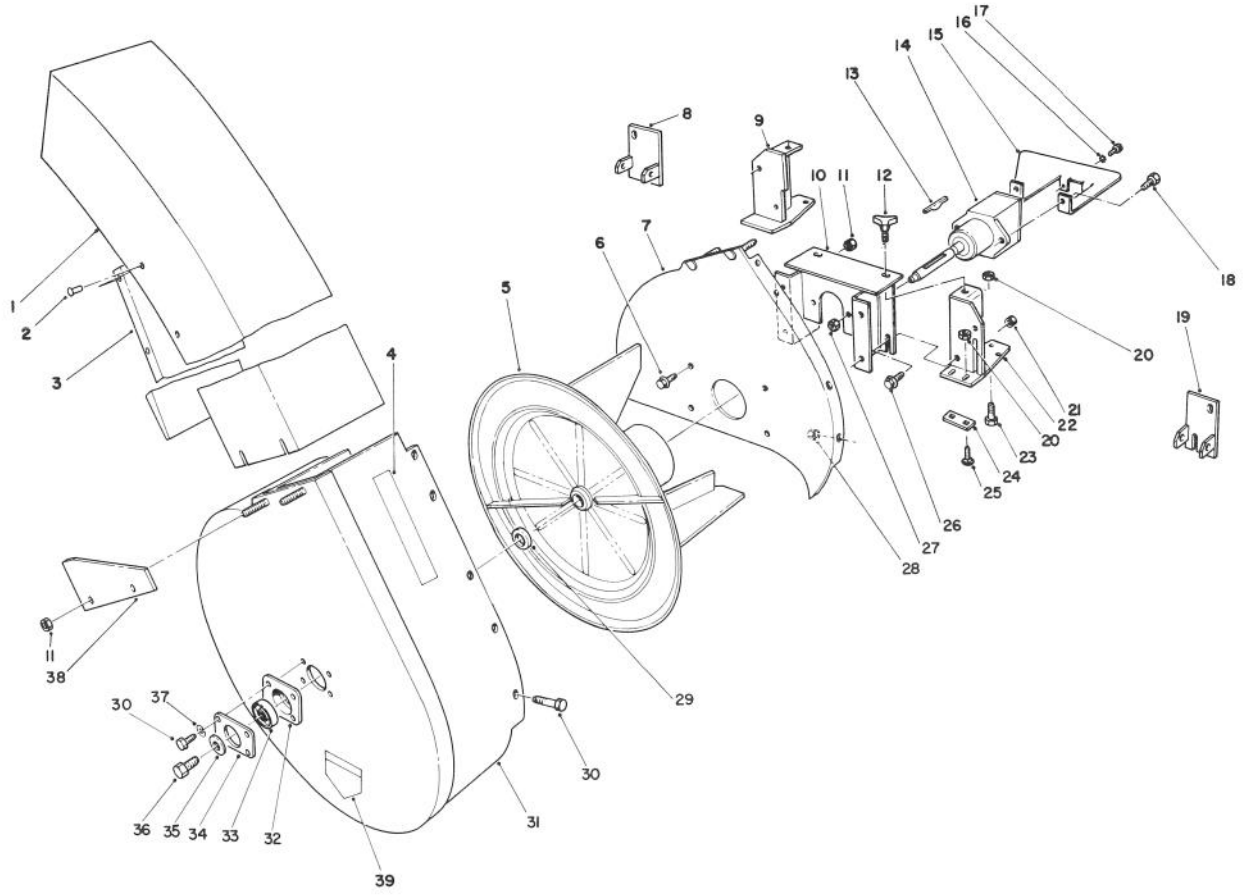

T-0601

52" BLOWER KIT MODEL NO. 30502 (Optional)

Ref. No.	Part No.	Description	No. Used
1	44-5300	Assembly - Chute (Incl. Ref. #2 & 3)	1
2	3290-409	Rivet	8
3		Deflector - Chute	1
4	82-5510	Decal - Warning	1
5	56-4780	Impeller	1
6	3234-14	Screw - Flange	4
7	59-5070	Plate - Mounting	1
8	59-4980	Bracket - Deflector L.H.	1
9	59-5050	Bracket - L.H.	1
10	59-5140	Mount - Blower	1
11	3296-29	Nut - Lock	8
12	62-6520	Knob	2
13	3257-40	Key - Hi Pro	1
14	53-4530	Assembly - Gear Box	1
15	59-5150	Cover - Gear Box	1
16	3255-17	Washer - Lock	2
17	3290-134	Screw - Cap Hex. Hd.	2
18	323-7	Screw - Cap Hex. Hd.	2
19	59-5000	Bracket - Deflector R.H.	1
20	32152-1	Nut - Lock	6

Ref. No.	Part No.	Description	No. Used
21	3218-3	Nut - Jam	2
22	59-5090	Bracket - R.H.	1
23	322-3	Screw - Cap Hex. Hd.	2
24	44-5460	Plate - Bracket	2
25	3230-1	Bolt - Carriage	4
26	3234-11	Screw - Flange	2
27	3296-44	Nut - Lock	2
28	3296-42	Nut - Lock	9
29	63-9710	Spacer - Bearing	1
30	321-3	Screw - Cap Hex. Hd.	13
31	13-0269	Housing - Blower (Incl. Ref. #4 & 39)	1
32	37-6730	Cup - Bearing	1
33	38-7820	Bearing - Ball	1
34	63-9700	Plate - Cover	1
35	43-0940	Spacer - Blower Hub	1
36	3235-22	Screw - Cap Hex. Hd.	1
37	3253-3	Washer - Lock	4
38	43-0960	Bracket - Chute	1
39	43-8480	Decal - Danger	2

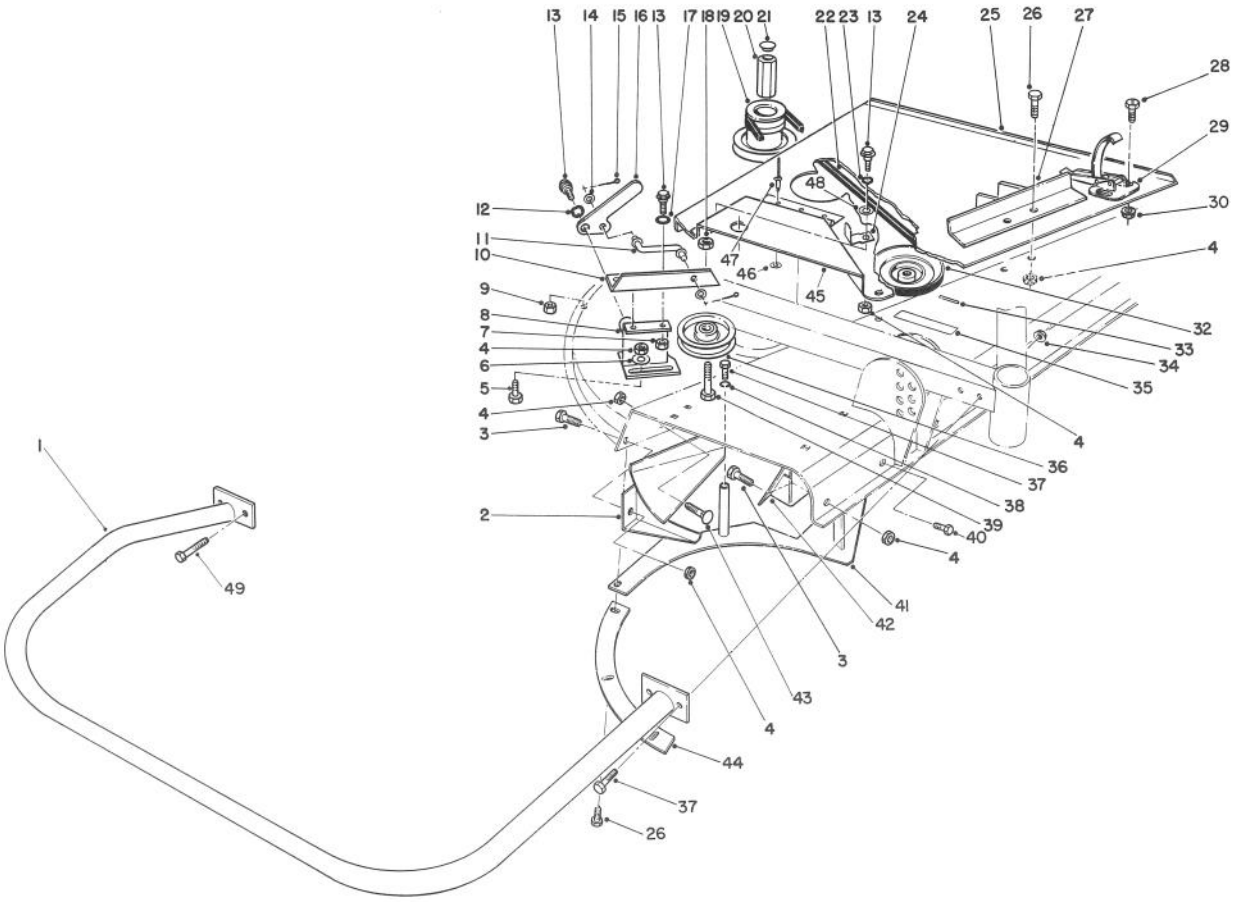

T-0602A

52" BLOWER KIT MODEL NO. 30502 (Optional) (Continued)

Ref. No.	Part No.	Description	No. Used
1	70-8050	Bumper	1
2	43-1060	Deflector - Rear	1
3	322-4	Screw - Cap Hex. Hd.	2
4	32152-1	Nut - Lock	10
5	322-3	Screw - Cap Hex. Hd.	3
6	3256-56	Washer - Flat	3
7	3296-29	Nut - Hex.	2
8	59-4920	Bracket - Idler Mounting	1
9	32152-4	Nut - Lock	5
10	59-4930	Slide - Idler	1
11	59-4940	Rod - Idler	1
12	3290-211	Washer - Spring	1
13	19-1470	Bolt - Shoulder	4
14	3256-23	Washer - Flat	2
15	3272-6	Pin - Cotter	2
16	56-4900	Lever - Idler	1
17	23-1120	Washer - Flat	2
18	3296-44	Nut - Hex.	1
19	59-5170	Pulley (Splined)	1
20	59-5190	Nut - Pulley	1
21	59-5310	Cover - Nut	1
22	59-5270	V-Belt	1
23	3290-211	Washer - Spring	1
24	59-5290	Latch	1
25	77-0180	Assembly - Cover, Right	1
26	321-4	Screw - Cap Hex. Hd.	7

Ref. No.	Part No.	Description	No. Used
27	77-0160	Bracket - Spring	1
28	3290-321	Screw - Machine	4
29	249-21	Latch - Draw	2
30	32128-17	Nut - Flange	4
31	32153-4	Nut - Lock	2
32	56-4810	Pulley - Gear Box	1
33	32121-8	Pin - Roll	1
34	32128-43	Nut - Lock	2
35	43-1120	Decal - Warning	1
36	56-4920	Pulley - Idler	1
37	323-6	Screw - Cap Hex. Hd.	6
38	3253-21	Washer - Lock	4
39	323-7	Screw - Cap Hex. Hd.	1
40	322-2	Screw - Cap Hex. Hd.	2
41	44-7770	Shelf - Rear	1
42	67-7540	Deflector - Front	1
43	3230-1	Bolt - Carriage	2
44	44-7780	Shelf - R.H.	1
45	77-0130	Cover - Pulley	1
46	3256-13	Washer - Flat	3
47	3290-55	Rivet - Pop	3
48	3256-4	Washer - Flat	1
49	325-32	Screw - Cap Hex. Hd.	2
*	44-5480	Blade - High Sail (18") (Optional)	1
*†	32128-23	Nut - Flange	2

*Not Illustrated

†Required on older units for mounting Bumper No. 70-8050 to carrier frame.

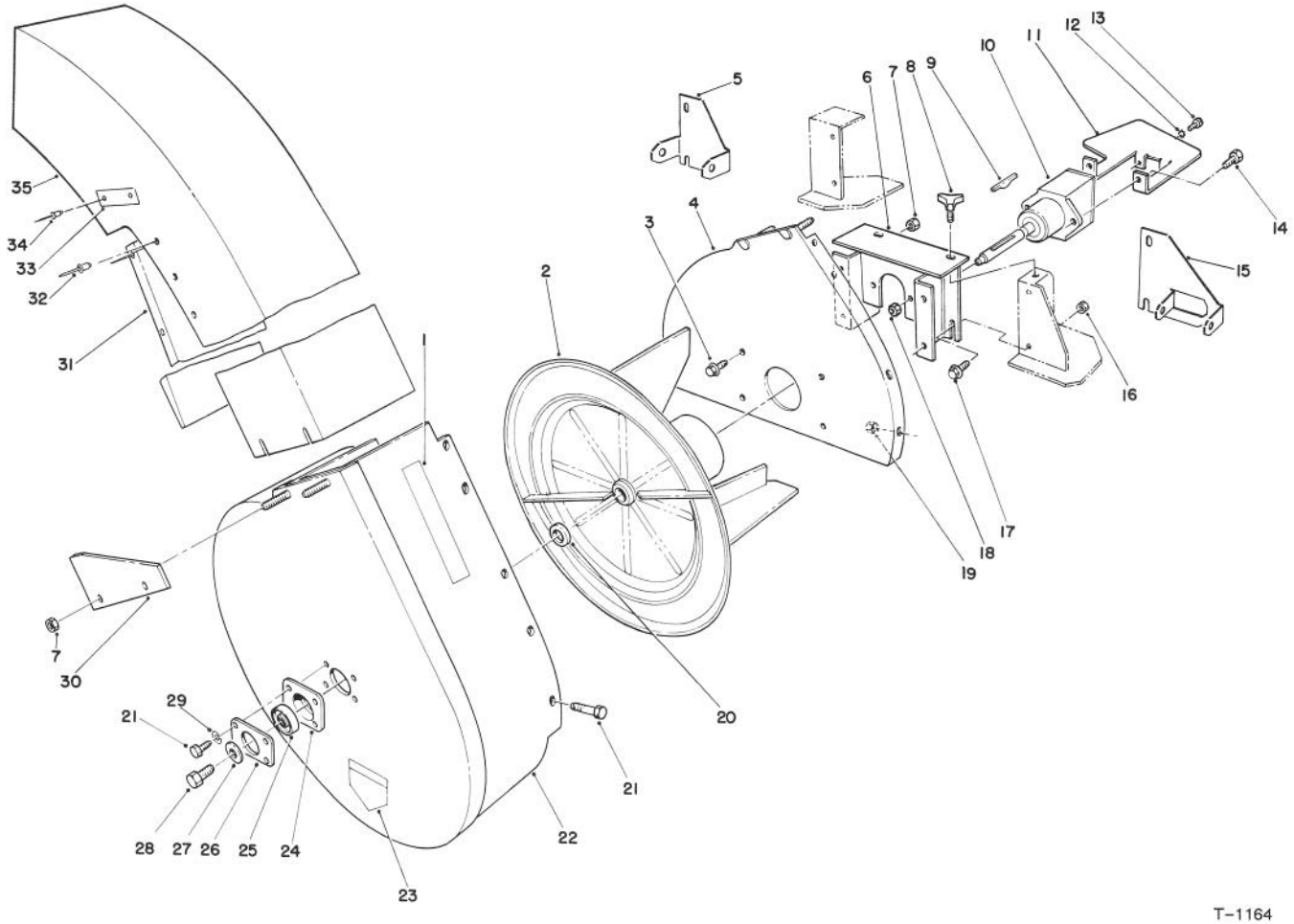

T-1164

62" BLOWER KIT MODEL NO. 30503 (OPTIONAL)

Ref. No.	Part No.	Description	No. Used
1	82-5510	Decal - Warning	1
2	56-4780	Impeller	1
3	3234-14	Screw - Flange Hd.	4
4	77-5820	Plate W.A. - Mounting	1
5	80-2820	Bracket - Pivot, L.H.	1
6	77-5440	Mount - Blower W.A.	1
7	3296-29	Nut - Lock	8
8	62-6520	Knob	2
9	3257-40	Key - Hi Pro	1
10	53-4530	Assembly - Gear Box	1
11	77-5630	Cover - Gear Box	1
12	3255-17	Washer - Lock	2
13	3290-134	Screw - Cap Hex. Hd.	2
14	323-7	Screw - Cap Hex. Hd.	2
15	80-2810	Bracket - Pivot, R.H.	1
16	3218-3	Nut - Jam	2
17	3234-11	Screw - Flange Hd.	2
18	3296-44	Nut - Lock	2
19	3296-42	Nut - Lock	9

Ref. No.	Part No.	Description	No. Used
20	63-9710	Spacer - Bearing	2
21	321-3	Screw - Cap Hex. Hd.	13
22	13-0269	Housing - Blower (Incl. Ref. #1 & 23)	1
23	43-8480	Decal - Danger	1
24	37-6730	Cup - Bearing	1
25	38-7820	Bearing - Ball	1
26	63-9700	Cover - Plate	1
27	43-0940	Spacer - Hub, Blower	1
28	3235-22	Screw - Cap Hex. Hd.	1
29	3253-3	Washer - Lock	4
30	43-0960	Bracket - Chute	2
31		Deflector - Chute	1
32	3290-409	Rivet	6
33	80-4670	Plate	2
34	3290-271	Rivet	4
35	80-3720	Assembly - Chute (Incl. Ref. #32-34)	1
*†	66-8390	Spring - Heavy Duty	1

*Not Illustrated

†Heavy duty spring (66-8390) is used on Counter Balance Assy. on right hand Blower side

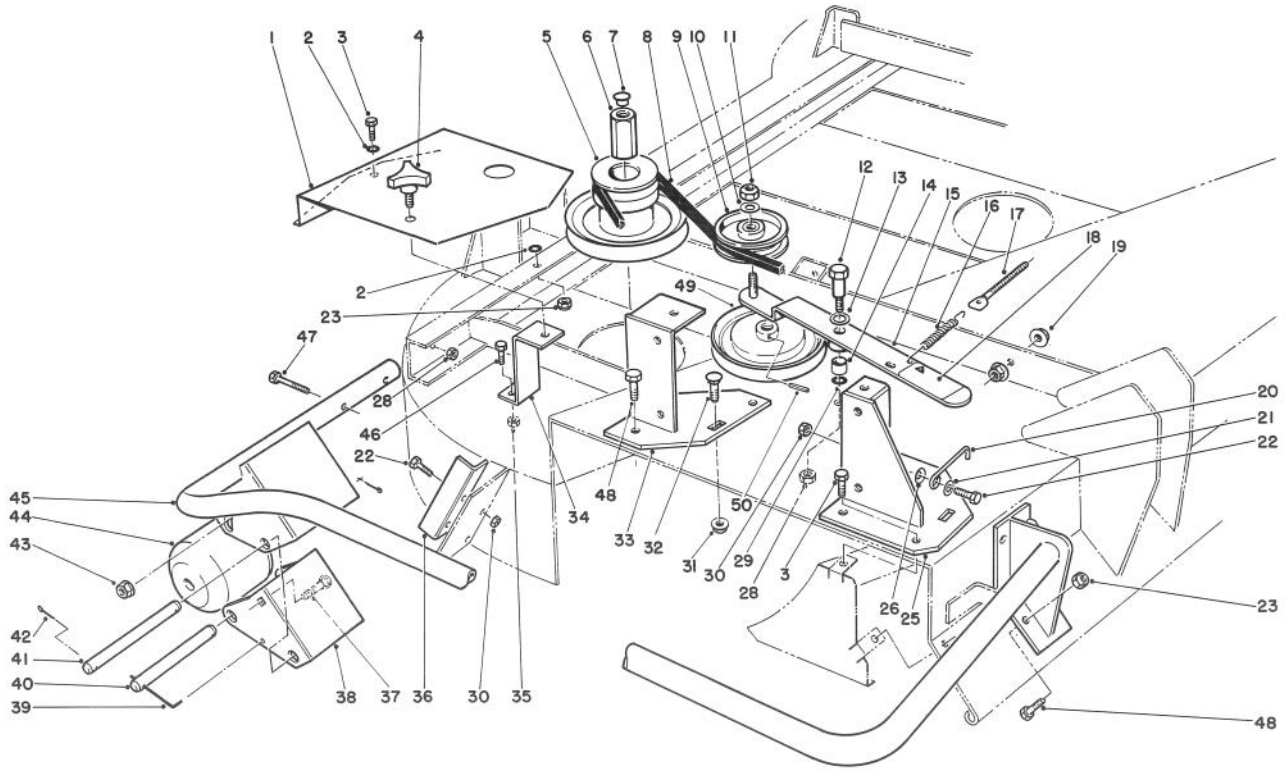

T-1167A

62" BLOWER KIT MODEL NO. 30503 (OPT.) (CONTINUED)

Ref. No.	Part No.	Description	No. Used
1	77-5620	Cover - Deck, R.H.	1
2	3256-23	Washer - Flat	2
3	322-5	Screw - Cap Hex. Hd.	2
4	62-6520	Knob	1
5	77-5420	Pulley W.A. - Splined	1
6	59-5190	Nut - Pulley	1
7	59-5310	Cover - Nut	1
8	80-3590	V-Belt	1
9	56-4920	Pulley - Idler	1
10	3256-38	Washer - Flat	1
11	3296-59	Nut - Lock	1
12	80-3250	Screw - Pivot	1
13	257-10	Washer	1
14	256-206	Bushing	1
15	80-3310	Assembly - Arm (Incl. Ref. #14 & 18)	1
16	37-8880	Spring	1
17	80-3560	Rod - Threaded	1
18	55-4300	Decal	1
19	32128-20	Nut - Flange	2
20	80-3570	Hook	1
21	3256-22	Washer - Flat	1
22	321-4	Screw - Cap Hex. Hd.	3
23	3296-29	Nut - Lock	9
25	77-5520	Bracket W.A. - R.H.	1

Ref. No.	Part No.	Description	No. Used
26	3290-451	Washer - Belleville	1
28	3296-39	Nut - Lock	3
29	257-9	Washer - Thrust	1
30	3296-42	Nut - Lock	3
31	3290-357	Nut - Flange	4
32	3231-27	Bolt - Carriage	4
33	77-5560	Bracket W.A. - L.H.	1
34	77-5600	Support - Cover	1
35	32146-18	Nut	2
36	80-3550	Stop - Deflector	1
37	3231-22	Bolt - Carriage	2
38	80-3450	Bracket - Roller	1
39	80-3230	Pin - Special	1
40	80-3440	Shaft - Roller	1
41	80-3200	Shaft	1
42	3272-11	Pin - Cotter	3
43	32128-43	Nut - Lock	2
44	80-3580	Roller	1
45	77-6940	Bumper W.A.	1
46	3290-134	Screw - Cap Hex. Hd.	2
47	323-19	Screw - Cap Hex. Hd.	2
48	322-3	Screw - Cap Hex. Hd.	8
49	56-4810	Pulley - W.A. Gear Box	1
50	32121-8	Pin - Roll	1

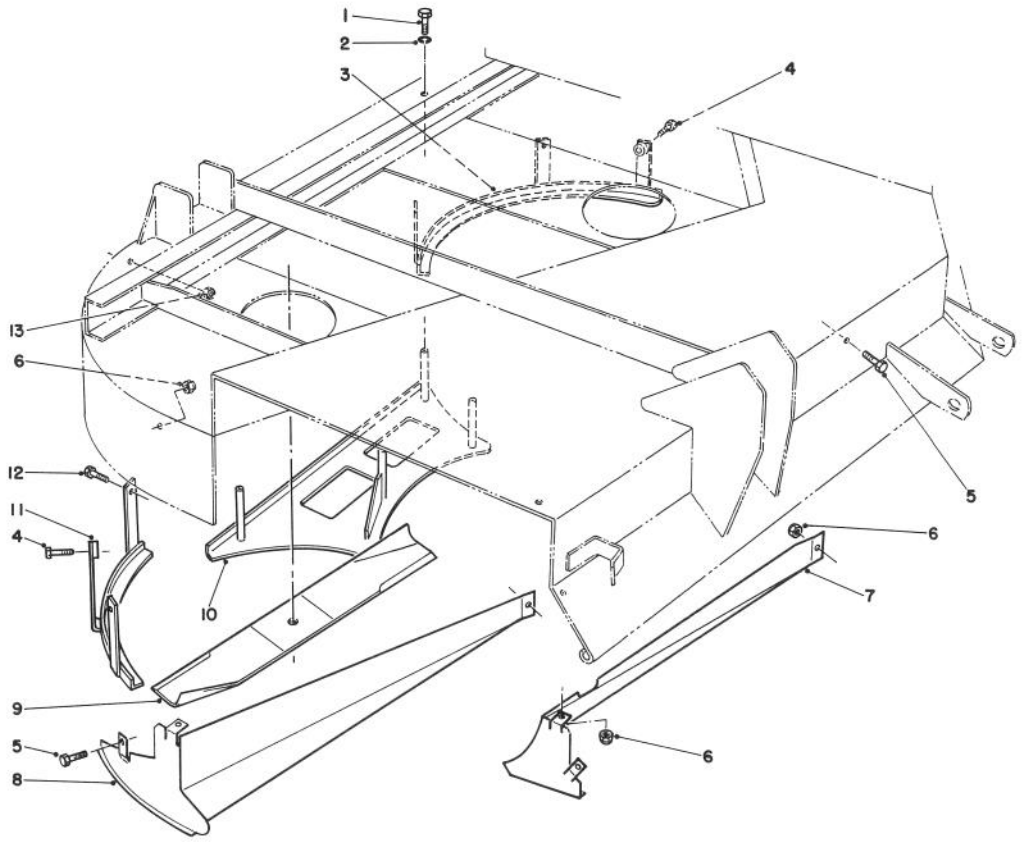

T-1165

62" BLOWER KIT MODEL 30503 (OPT.)(CONTINUED)

Ref. No.	Part No.	Description	No. Used
1	323-6	Screw - Cap Hex. Hd.	4
2	3253-21	Washer - Lock	4
3	77-5930	Shelf W.A. - Bottom, Left	1
4	321-6	Screw - Cap Hex. Hd.	3
5	322-2	Screw - Cap Hex. Hd.	5
6	3296-29	Nut - Lock	6
7	77-5740	Deflector W.A. - Front	1

Ref. No.	Part No.	Description	No. Used
8	77-5670	Deflector W.A. - Rear	1
9	77-6710	Blade	3
10	77-5640	Shelf W.A. - Rear	1
11	77-5850	Shelf W.A. - Right	1
12	321-4	Screw - Cap Hex. Hd.	3
13	3296-42	Nut - Lock	6

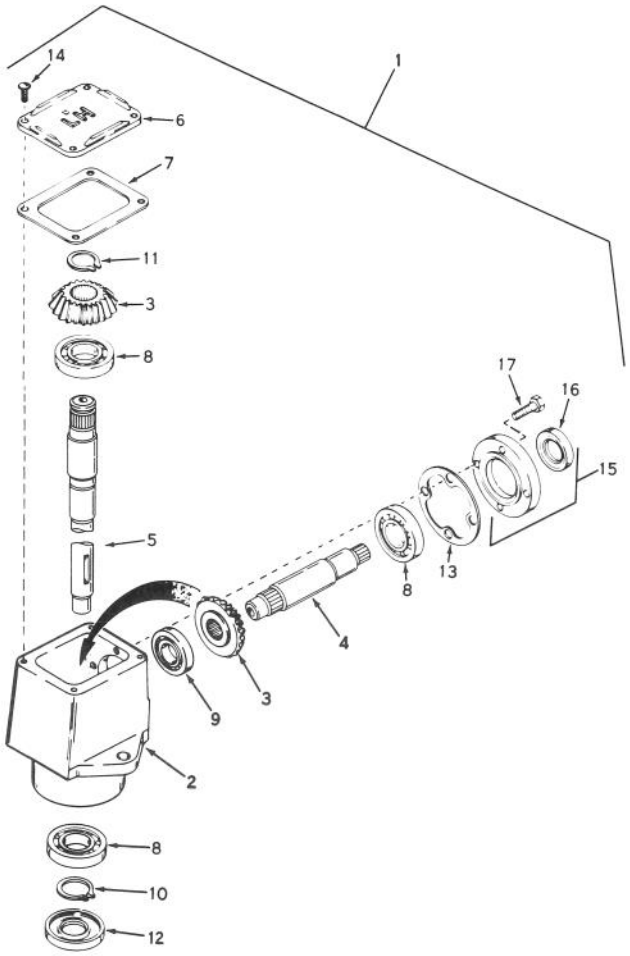

T-1168-90

GEAR BOX ASSEMBLY 53-4530

Ref. No.	Part No.	Description	No. Used
1	794402	Assembly - Head, L.H. (Incl. Ref.#2-15)	1
2	770026A	Housing - Right Angle Drive	1
3	778046	Gear - Miter	2
4	776250	Shaft - Input	1
5	776249	Shaft - Output	1
6	772035	Cover	1
7	788028	Gasket - Cover	1
8	780034	Bearing - Ball	3
9	780024	Bearing - Ball	1

Ref. No.	Part No.	Description	No. Used
10	788019	Ring - Snap	1
11	788018	Ring - Snap	1
12	788029	Seal - Oil	1
13	788030	Gasket - Cap	1
14	792025	Screw - Rd. Hd. Self-Tap.	4
15	786029	Assy. - Cap/Seal Retainer (Incl. Ref.#16 & 17)	1
16	788031	Seal - Oil	1
17	792026	Screw - Cap Hex. Hd.	4

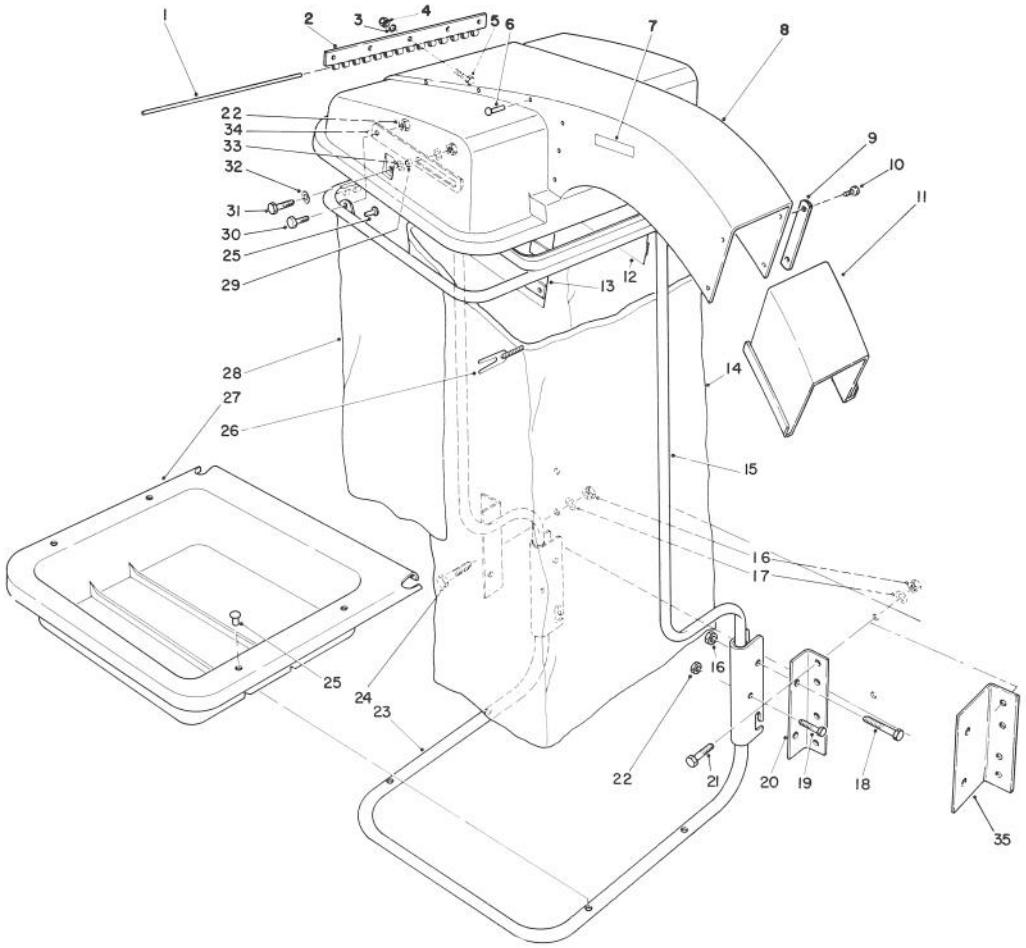

T-0603

9 CU. FT. HOPPER KIT MODEL NO. 30504 (Optional)

Ref. No.	Part No.	Description	No. Used
1	43-1000	Pin - Hinge, Hood	1
2	43-0610	Hinge - Half	1
3	3256-14	Washer - Flat	5
4	3296-2	Nut - Lock	5
5	3290-134	Screw - Mach. Hex. Hd.	5
6	3290-412	Rivet - Pop	14
7	43-1100	Decal - Caution	2
8	13-1649	Assembly - Hood (Incl. Ref. #7)	1
9	67-1730	Plate - Nut	2
10	3274-31	Screw - Button Head	4
11	77-0680	Extension - Snout	1
12	43-0600	Screen - Left Hand	1
13	43-0570	Screen - Right Hand	1
14	43-0990	Bag - Cloth 32" (7 bushel capacity)	1
*	43-0980	Bag - Cloth 38" (10 bushel capacity) (Optional)	1
15	67-7500	Assy. - Upper Support Tube (Incl. Ref. #25 & 28)	1
16	32152-2	Nut - Lock	12
17	3256-3	Washer - Flat	8

Ref. No.	Part No.	Description	No. Used
18	323-11	Screw - Cap Hex. Hd.	4
19	322-11	Screw - Cap Hex. Hd.	2
20	43-1010	Bracket - Frame (Use with 52" Blower Kit)	4
21	323-7	Screw - Cap Hex. Hd.	7
22	32152-1	Nut - Lock	6
23	43-0720	Assy. - Lower Support Tube (Incl. Ref. #25 & 27)	1
24	323-10	Screw - Cap Hex. Hd.	1
25	3290-409	Rivet - Pop	21
26	3-2781	Retainer - Cord	1
*†	36-7770	Retainer - Cord (Optional)	1
27		Tray - Lower	1
28		Skirt - Bagging Frame	1
29	43-1020	Spacer - Pivot Arm	2
30	322-3	Screw - Cap Hex. Hd.	2
31	322-4	Screw - Cap Hex. Hd.	2
32	3256-56	Washer - Flat	2
33	3256-57	Washer - Fender	4
34	43-1051	Stop - Hood	2
35	76-1990	Bracket - Frame (Use with 62" Blower Kit	4
*	44-9720	Template - Bracket	1

*Not Illustrated

†For use with 30 Gallon Plastic Bag.

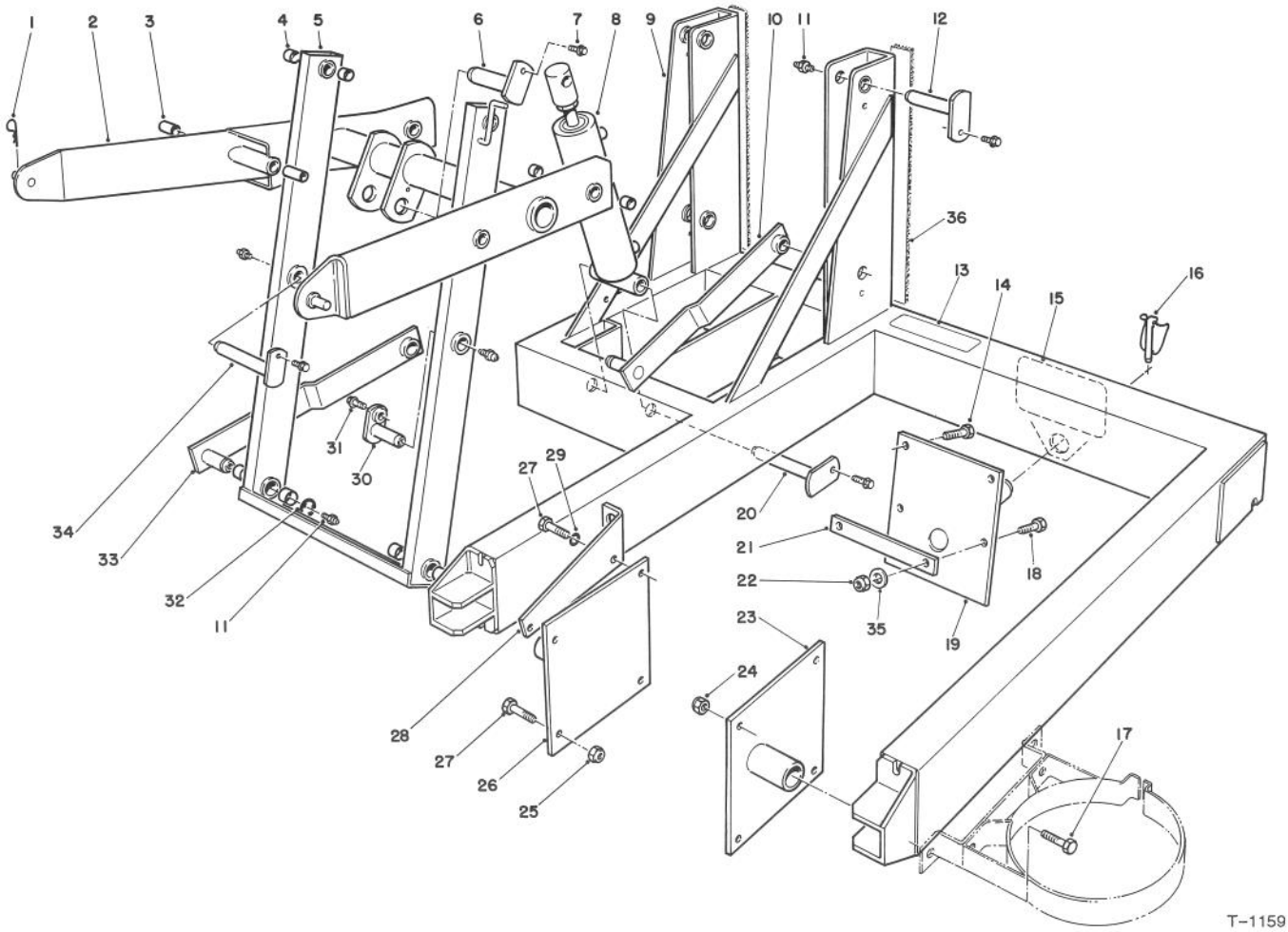

15 CU. FT. HOPPER KIT MODEL 30505 (OPTIONAL)

Ref. No.	Part No.	Description	No. Used
1	3290-355	Pin - Cotter, Hair	2
2	77-6740	Arm W.A. - Lift, Main (Incl. Ref. #3 & 4)	1
3	256-77	Bushing	2
4	256-76	Bushing	14
5	77-6750	Arm W.A. (Incl Ref. #4)	1
6	77-6560	Pin - Mount, Cylinder	1
7	12-3270	Screw - Hex. Washer Hd.	6
8	77-5950	Cylinder - Lift	1
9	77-6000	Frame W.A. - Main (Inc. Ref. #13, 15 & 36)	1
10	77-6360	Arm W.A. - L.H., Lower (Incl. Ref. #11)	1
11	302-5	Fitting - Grease	8
12	77-6600	Pin (Incl. Ref. #11)	4
13	80-4650	Decal	1
14	325-5	Screw - Cap Hex. Hd.	2
15	62-5550	Decal - Toro	1
16	3290-384	Pin - Disconnect	1
17	322-6	Screw - Cap Hex. Hd.	4
18	325-6	Screw - Cap Hex. Hd.	2
19	77-6160	Bracket W.A. - Rear	1
20	77-6561	Pin	1
21	77-6690	Strap	2
22	3296-25	Nut - Lock	4
23	77-6240	Bracket W.A. - Side, L.H.	1
24	3296-29	Nut - Lock	4
25	32152-2	Nut	2
26	77-6210	Bracket W.A. -Side, R.H.	1
27	323-6	Screw - Cap Hex. Hd.	4
28	77-6670	Bracket - Coupler	1
29	3253-5	Washer - Lock	2
30	77-6602	Pin (Incl. Ref. #11)	1
31	49-2040	Screw - Hex. Washer Hd.	2
32	32151-48	Ring - Retaining	2
33	77-6390	Arm W.A. - Lower, R.H. (Incl. Ref. #11)	1
34	77-6601	Pin (Incl. Ref. #11)	1
35	3256-26	Washer - Flat	2
36	82-5880	Bumper	2
*	80-4660	Decal - Warning	1

*Not Illustrated

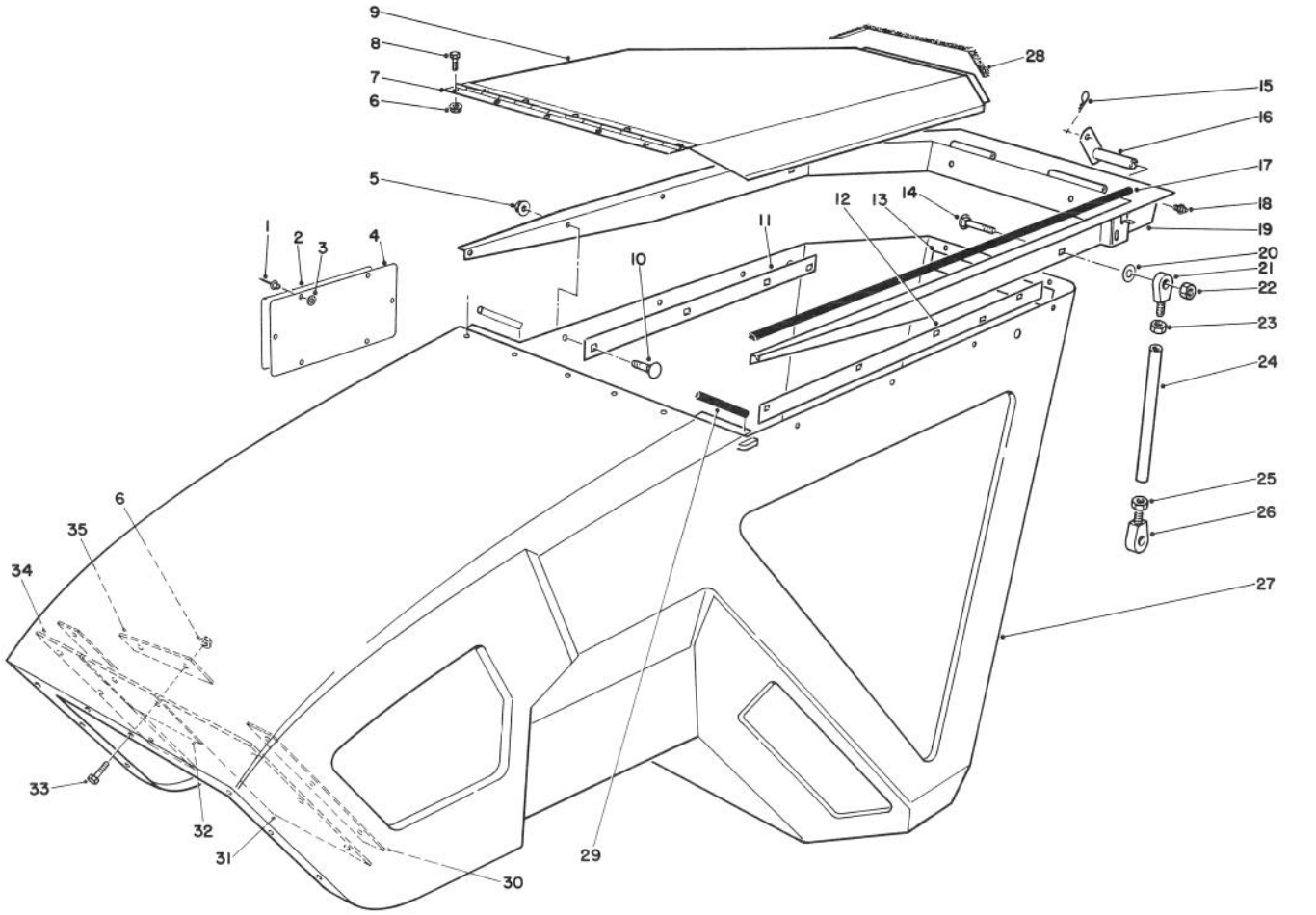

T-1160-90

15 CU. FT. HOPPER KIT MODEL 30505 (OPT.)(CONTINUED)

Ref. No.	Part No.	Description	No. Used
1	3290-415	Rivet - Pop	6
2	80-4760	Decal	1
3	3269-10	Washer	6
4	80-4740	Plate	1
5	32128-20	Nut - Flange	9
6	32128-17	Nut - Flange	18
7	77-6770	Hinge	1
8	3290-134	Screw - Cap Hex. Hd.	10
9	77-6520	Cover - Hopper, Front	1
10	3230-2	Bolt - Carriage	9
11	77-6651	Plate - Backup	1
12	77-6650	Plate - Backup	1
13	77-6660	Plate - Backup	1
14	3233-14	Bolt - Carriage	2
15	3290-467	Pin - Hair, Cotter	2
16	77-6600	Pin (Incl. Ref. #18)	2
17	82-5861	Seal - Left	1
*	82-5860	Seal - Right	1

Ref. No.	Part No.	Description	No. Used
18	302-5	Fitting - Grease	2
19	77-6430	Arm W.A.	1
20	3256-26	Washer - Flat	2
21	2411-48	Rod End	2
22	3296-23	Nut - Lock	2
23	3220-5	Nut - Jam	2
24	77-6490	Rod	2
25	3220-12	Nut - Jam, L.H. Thd.	2
26	2411-49	Rod End - L.H. Thd.	2
27	77-6510	Hopper	1
28	82-5850	Seal - Cover, Rear	1
29	82-5851	Seal - Side	2
30	82-5840	Flat - Long	2
31	82-5820	Shield - Wide	1
32	82-5810	Shield - Top	1
33	32105-12	Screw - Cap Hex. Hd.	8
34	82-5821	Shield - Narrow	1
35	82-5830	Flat - Short	1

*Not Illustrated

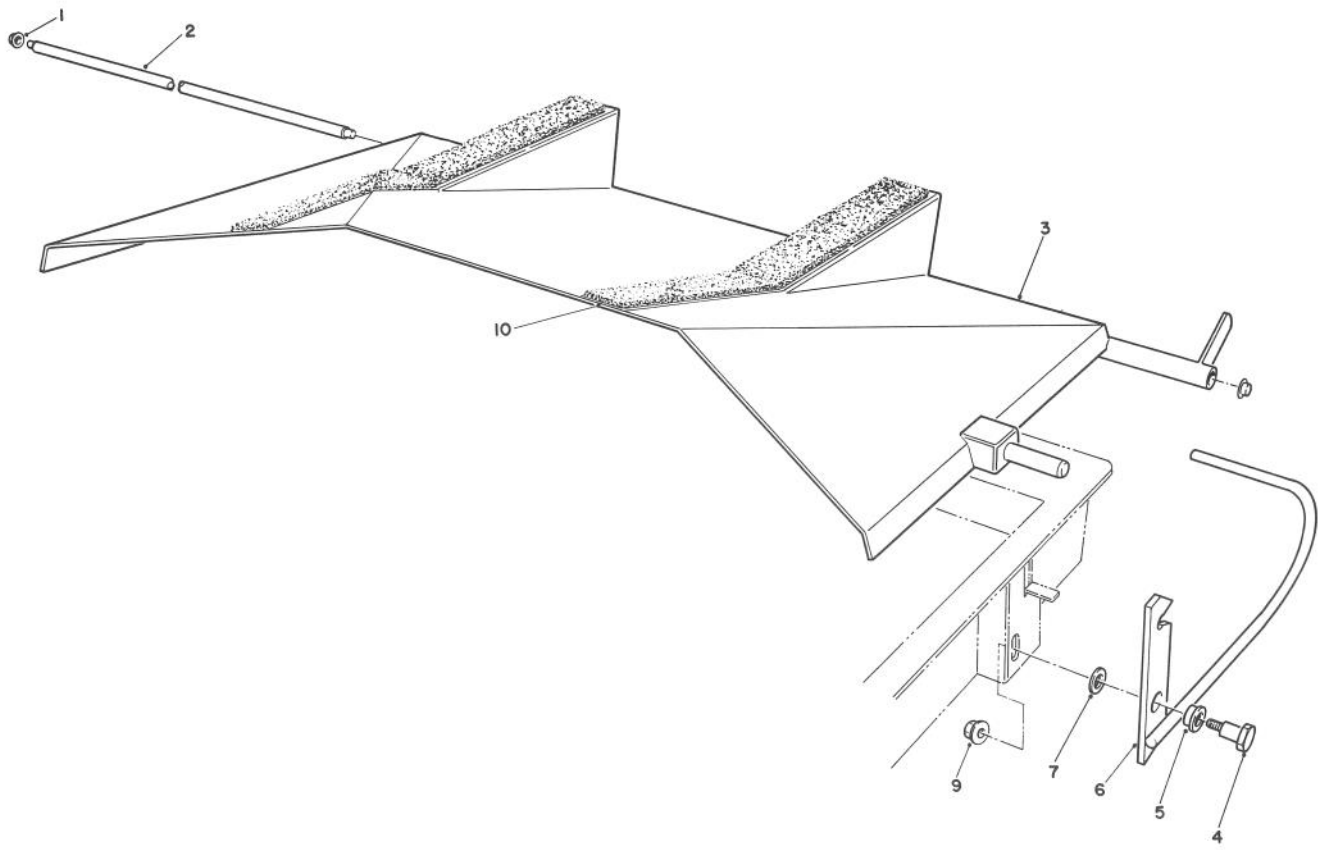

T-1169

15 CU. FT. HOPPER KIT MODEL 30505 (OPT.)(CONTINUED)

Ref. No.	Part No.	Description	No. Used
1	32112-1	Retainer - Cap	2
2	77-6540	Pin - Hinge	1
3	77-6530	Cover - Rear	1
4	28-0540	Bolt - Shoulder	1
5	256-284	Bushing	1

Ref. No.	Part No.	Description	No. Used
6	77-6890	Latch (Incl. Ref. #5)	1
7	80-4980	Washer - Flat	1
9	32128-20	Nut - Flange	1
10	82-5870	Foam	2

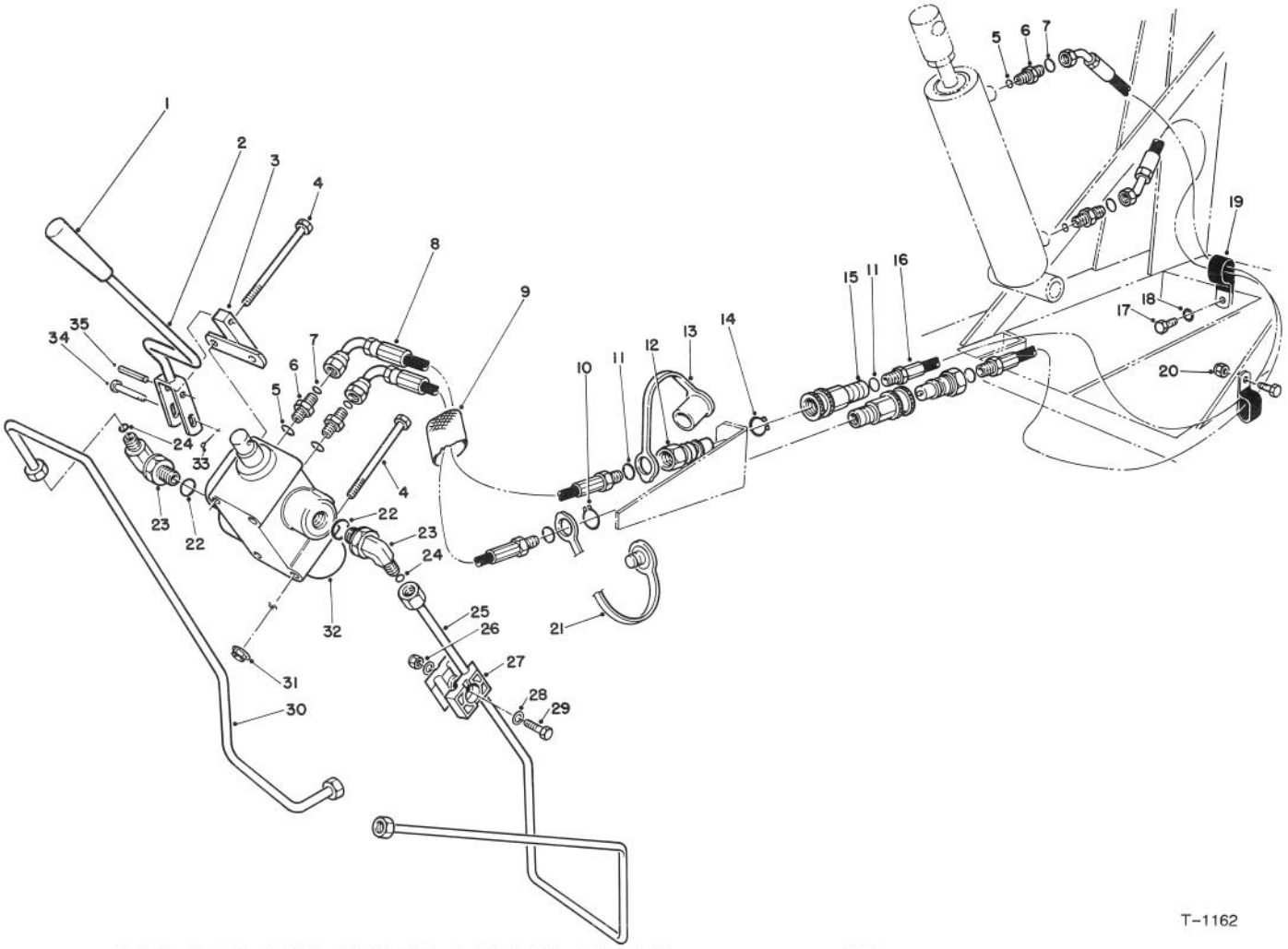

15 CU. FT. HOPPER KIT MODEL 30505 (OPT.)(CONTINUED)

Ref. No.	Part No.	Description	No. Used
1	233-39	Knob - Handle	1
2	80-3490	Handle W.A.	1
3	80-3360	Lever W.A. - Pivot	1
4	321-14	Screw - Cap Hex. Hd.	3
5	237-78	O-Ring	4
6	340-92	Fitting	4
7	237-21	O-Ring	4
8	77-5960	Assembly - Hose	2
9	56-7982	Protector - Sleeve	1
10	32151-83	Ring - Retaining	1
11	237-42	O-Ring	4
12	63-1240	Nipple - Quick Disconnect	2
13	353-985	Cap - Dust	1
14	32151-79	Ring - Retaining	1
15	63-1220	Coupler - Quick Disconnect	2
16	77-5970	Assembly - Hose	2
17	322-3	Screw - Cap Hex. Hd.	2
18	3253-4	Washer - Lock	1
19	2412-105	Clamp - Tube, Double	2

Ref. No.	Part No.	Description	No. Used
20	3296-29	Nut - Lock	1
21	353-984	Plug - Dust	1
22	237-79	O-Ring	2
23	340-77	Fitting	2
24	237-22	O-Ring	2
25	77-5980	Assembly - Tube	1
26	3296-8	Nut - Lock	1
27	56-7973	Clamp	2
28	3256-22	Washer - Flat	2
29	321-8	Screw - Cap Hex. Hd.	1
30	77-5990	Assembly - Tube	1
31	32128-33	Nut - Flange Hd.	3
32	43-1950	Assembly - Valve	1
33	3272-4	Pin - Cotter	1
34	283-17	Pin - Clevis	1
35	32121-5	Pin - Roll	1
*36	80-4640	Decal - Valve Operation	1
37	80-4900	Kit - Auxiliary Valve (Incl. Ref. #1-15 & 21-36)	1

*Not Illustrated

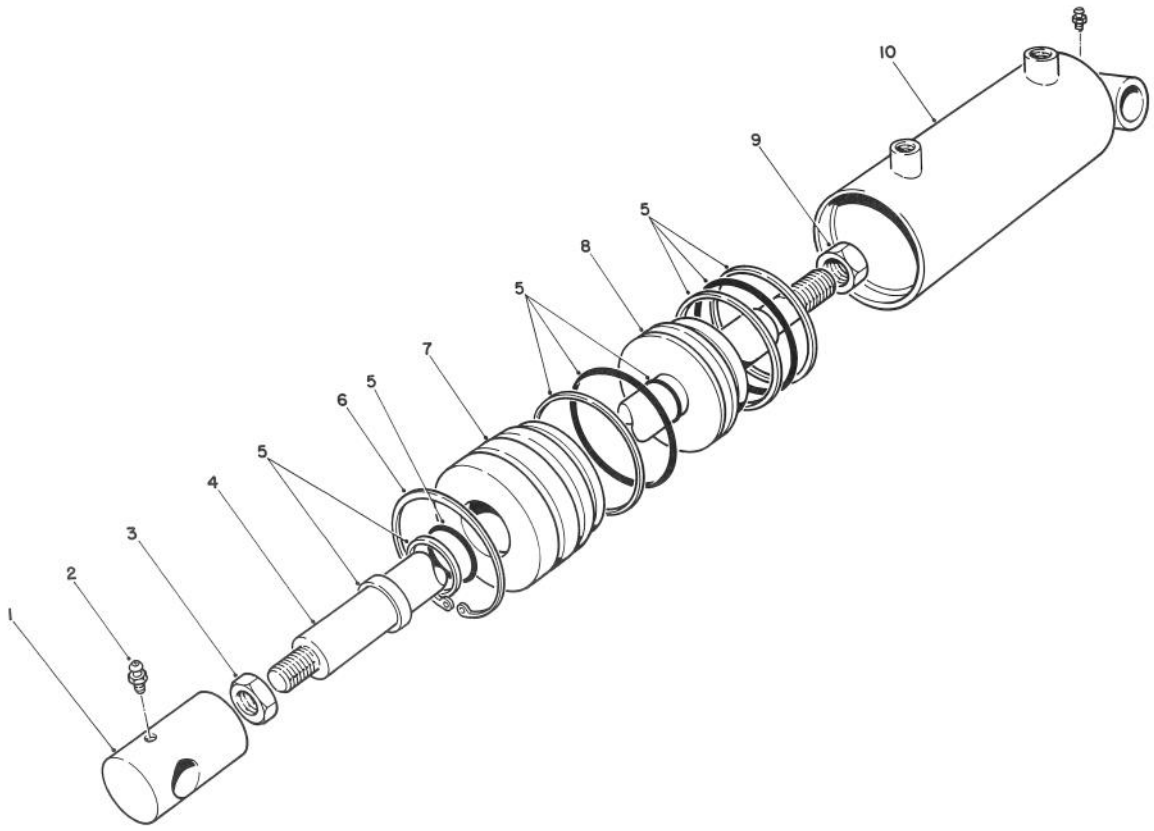

T-1161

15 CU. FT. HOPPER KIT MODEL 30505 (OPT.)(CONTINUED)
CYLINDER ASSEMBLY NO. 77-5950

Ref. No.	Part No.	Description	No. Used
1	77-6980	Clevis	1
2	302-55	Fitting - Grease	2
3	77-6990	Nut	1
4	77-6960	Shaft	1
5	67-5500	Kit - Repair	1

Ref. No.	Part No.	Description	No. Used
6	67-5470	Ring - Retaining	1
7	67-5460	Head	1
8	67-5450	Piston	1
9	60-9760	Nut - Hex.	1
10	77-6970	Barrel	1

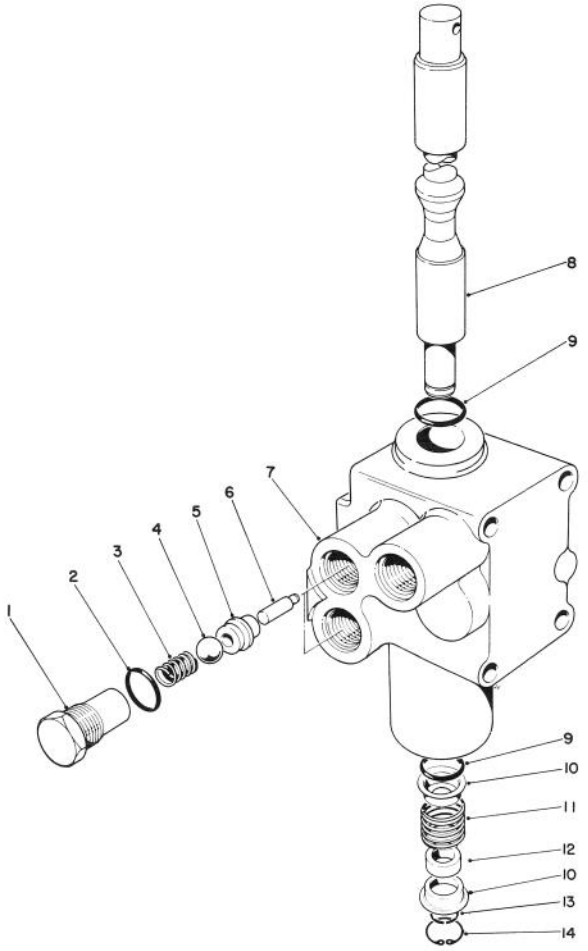

T-0236

15 CU. FT. HOPPER KIT MODEL 30505 (OPT.)(CONTINUED)
CONTROL VALVE NO. 43-1950

Ref. No.	Part No.	Description	No. Used
1	22-8330	Plug	2
2	237-42	O-Ring	2
3	22-8340	Spring	2
4	22-8350	Ball	2
5	22-8370	Seat - Valve, Check	2
6	22-8360	Pin - Cam	2
7	43-1730	Body	1
8	22-8420	Spool	1

Ref. No.	Part No.	Description	No. Used
9	22-8500	O-Ring	2
10	22-8380	Retainer - Spring	2
11	22-8410	Spring	1
12	23-3030	Spacer	1
13	22-8480	Ring - Retaining, Spool	1
14	22-8490	Ring - Retaining	11

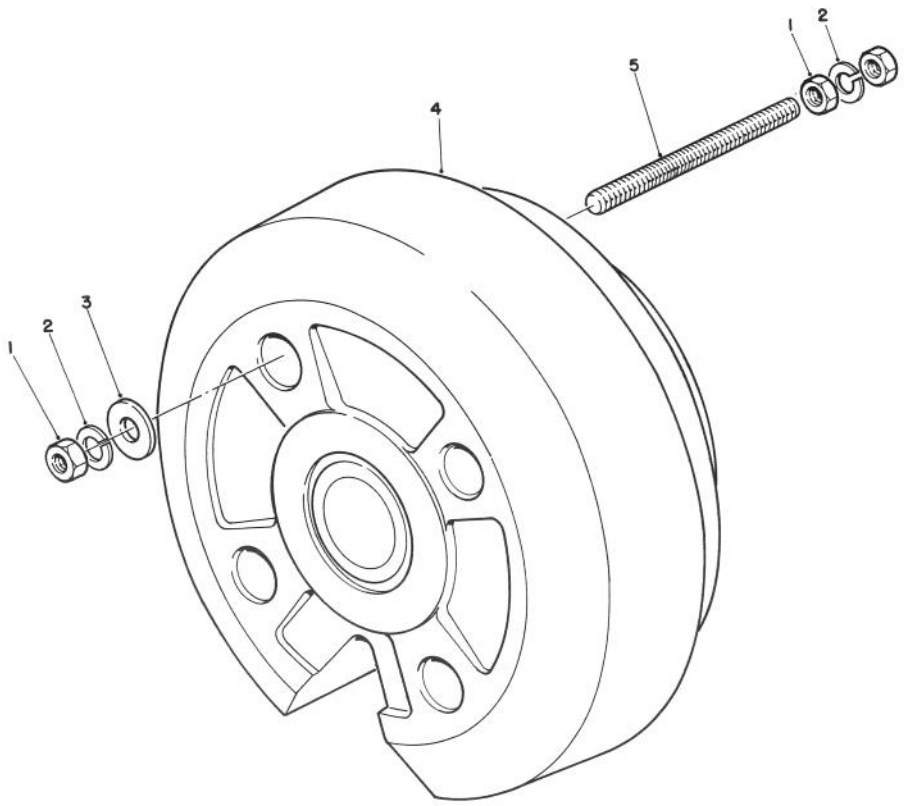

T-1163

15 CU. FT. HOPPER KIT MODEL 30505 (OPT.)(CONTINUED)

Ref. No.	Part No.	Description	No. Used
1		Nut – Hex	6
2		Washer – Lock	4
3		Washer – Flat	2

Ref. No.	Part No.	Description	No. Used
4	77-6700	Weight – Wheel 75# (Incl. Ref. #1-3 & 5)	1
5		Rod – Threaded	2

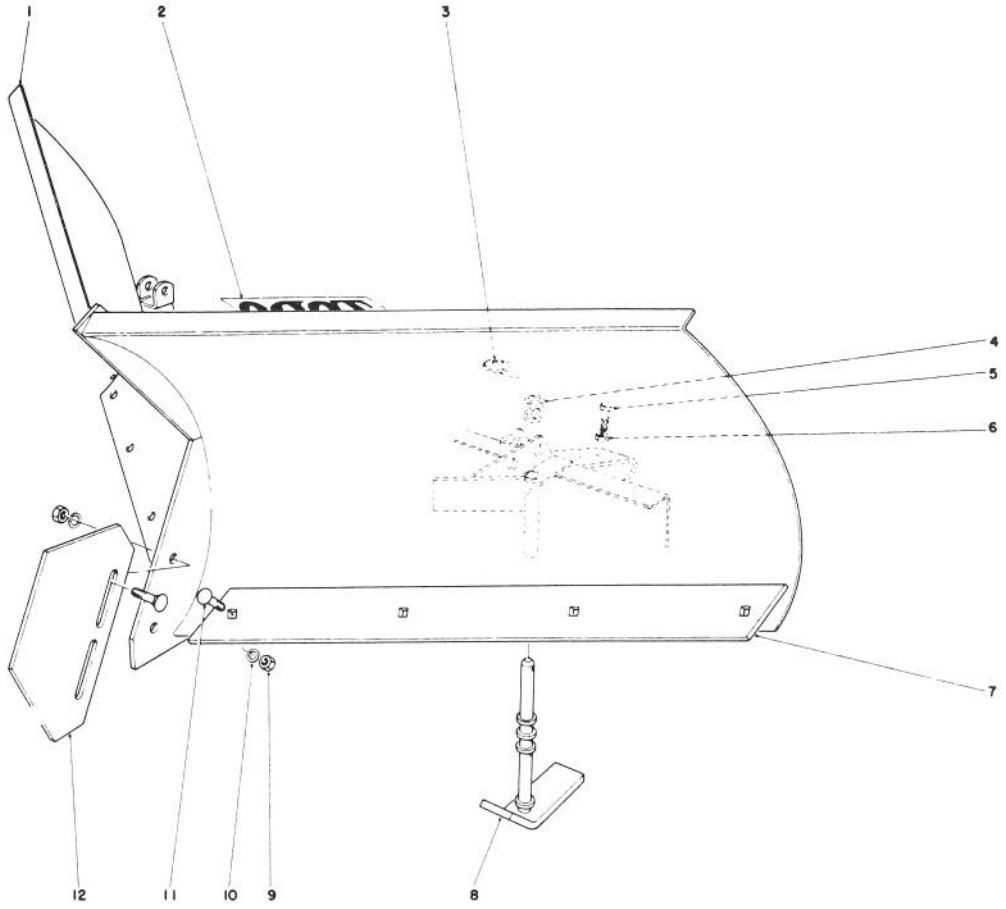

T-0452

V-PLOW KIT MODEL NO. 30750 (Optional)

Ref. No.	Part No.	Description	No. Used
1	23-9960	V-Plow	1
2	66-6140	Decal	1
3	3290-243	Pin - Lynch	2
4	20-4370	Spacer - Tubes	10
5	325-6	Screw - Cap Hex. Hd.	1
6	3218-5	Nut - Jam	1

Ref. No.	Part No.	Description	No. Used
7	24-5570	Blade - Scraper	2
8	24-5540	Skid	2
9	3217-9	Nut - Hex.	10
10	3253-7	Washer - Lock	10
11	3233-2	Bolt - Carriage	10
12	24-5530	Skid - Nose	1

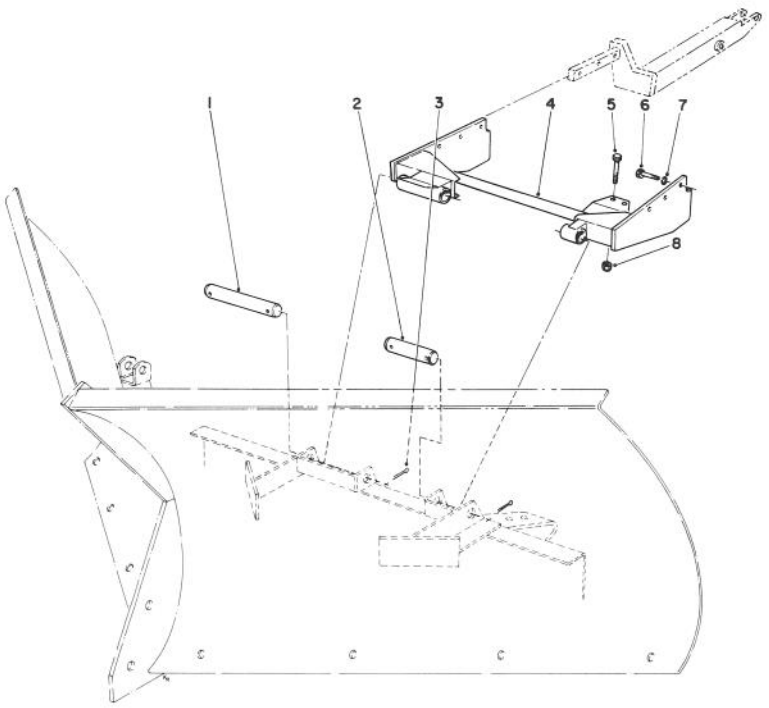

T-0902

V-PLOW INSTALLATION KIT MODEL NO. 30749 (Optional)*

Ref. No.	Part No.	Description	No. Used
1	28-5490	Pin - R.H.	1
2	25-1350	Pin - L.H.	1
3	3272-23	Pin - Cotter	4
4	72-4440	Assembly - Arm, Push	1

Ref. No.	Part No.	Description	No. Used
5	322-10	Screw - Cap Hex. Hd.	2
6	325-6	Screw - Cap Hex. Hd.	6
7	3253-7	Washer - Lock	6
8	3296-29	Nut - Lock	2

*Note: Installation requires Lift Arm Assemblies 76-3080 and 76-3090.

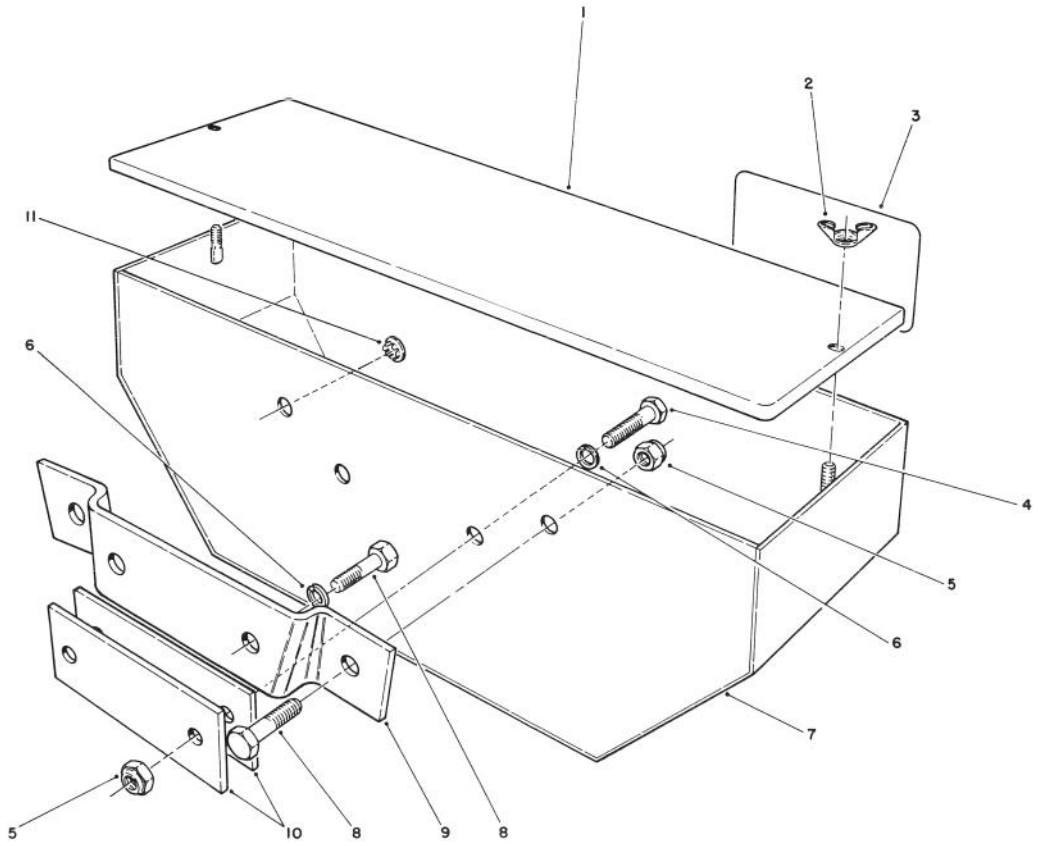

T-0404

WEIGHT BOX KIT NO. 62-6590 (Optional)

Ref. No.	Part No.	Description	No. Used
1	61-4130	Cover - Weight Box	1
2	32103-2	Nut - Wing	2
3	43-5110	Decal	1
4	325-7	Screw - Cap Hex. Hd. (GM-220, 220D, 224, 322D & 345)	2
5	3296-25	Nut - Lock (GM-220, 220D & 224)	4
5	3296-25	Nut - Lock (GM-117, 217D, 322D & 345)	2
6	3253-7	Washer - Lock (GM-117, 217D & 327)	2

Ref. No.	Part No.	Description	No. Used
7	61-4090	Box - Weight	1
8	325-5	Screw - Cap Hex. Hd. (GM-117, 217D, 220, 220D & 224)	4
9	61-4140	Bracket (GM-117, 217D, 220, 220D & 224)	1
10	62-6710	Plate (GM-322D, 327 & 345)	2
11	2410-67	Plug	2

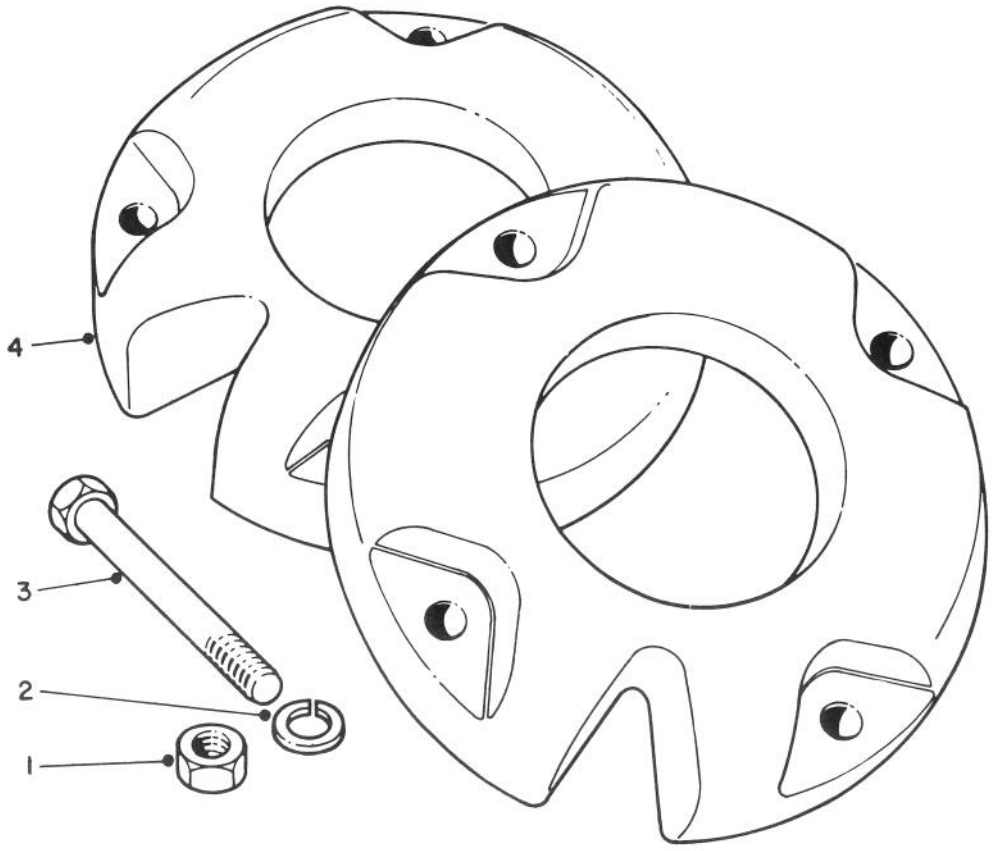

T-0457

WHEEL WEIGHTS MODEL NO. 11-0440 (OPTIONAL)

Ref. No.	Part No.	Description	No. Used
1	3218-5	Nut	8
2	3253-7	Washer - Lock	8

Ref. No.	Part No.	Description	No. Used
3	325-14	Screw - Cap Hex. Hd.	8
4	7-2111	Weight - Wheel	2

V40-726

PRODUCT CHANGES

In an effort to make improvements available to TORO owners as quickly as possible, minor changes are incorporated into Toro's products from time to time that do not become immediately shown in the Parts Catalog. If such a change has been made in your unit, which is not reflected in your manual, see your TORO Distributor or his Authorized TORO Service Dealer for information and part numbers.

IDENTIFICATION AND ORDERING

MODEL AND SERIAL NUMBERS

The Groundsmaster 224 has two identification numbers; a model number and a serial number. The two numbers are stamped on a plate which is located on the main frame under the seat. In any correspondence concerning the Groundsmaster 224, supply model and serial numbers to assure that correct information and replacement parts are obtained.

To order replacement parts from an Authorized TORO Service Dealer, supply the following information:
1. Model and serial number of the Groundsmaster 224.
2. Part number, description, and the quantity of part(s) desired.

NOTE: Do not order by reference number if a parts catalog is being used; use the PART NUMBER.

INDEX

Description	Page
Body Assembly	1-2
Control Panel Assembly	3
Electrical Schematic	4
Power Steering & Brake Pedal Assembly	5
Steering Valve Assembly No. 63-9250	6
Traction Pedal Assembly	7
Power Take Off Battery & Engine Mount	8-9
Hydraulic Lift System Assembly	10
Lift Valve Assembly No. 63-7960	11
Radiator Assembly	12
Fuel Tank and Axle Assembly	13
Differential Assembly	14-15
Brake Assembly	16
Transmission & Drive Coupling Assembly	17
Transmission Assembly No. 49-7910	18
Hydraulic Schematic	19
Transmission Interlock Assembly	20
Seat Frame & Air Cleaner Assembly	21-22
Standard Seat Kit Model No. 30769	23
Armrest Kit Model No. 30707	24
Deluxe Seat Kit Model No. 30772	25
Manual Storage	26
Rear Axle Assembly	27
Tire & Wheel Assembly 23 x 10.50 x 12 (Optional) No. 62-7020	28
Hydraulic Steering Cylinder No. 76-2070	29
Engine Assembly	30
Power Take-Off Assembly	31
Clutch Assembly No. 63-6050	32
Engine Block Assembly	33
Carb., Cyl. Head & Manifold Assembly	34
Carburetor Assembly	35
Camshaft & Valve Assembly	36
Piston, Camshaft & Flywheel Assembly	37
Gear Case Assembly	38
Water Pump Assembly	39
Distributor Assembly	40
Governor Assembly	41
Starter Assembly	42
Alternator Assembly	43
52" Cutting Unit Model No. 30555	44-46
52" Baffle Kit Part No. 68-7210	47
52" Mulcher Kit Model No. 30700 (Optional) (For Cutting Unit Model 30555)	48
52" Cutting Unit Model No. 30568	49-51
Tractor Shield Kit Model No. 30567 (Opt.)	52
52" Counter Balance Kit Model No. 30712	53
52" Weight Transfer Model No. 30702	54
62" Cutting Unit Model No. 30564	55-58
62" Baffle Kit Part No. 82-8800	59
62" Mulcher Kit Model No. 30792 (Optional) (Used with Model 30564 Cutting Unit)	60
62" Counter Balance Kit Model No. 30713	61
62" Weight Transfer Model No. 30703	62
Rear Weight	63
72" Cutting Unit Model No. 30575	64-67
72" Mulcher Kit Model No. 30779	68
72" Counter Balance Kit Model No. 30714	69
72" Weight Transfer Model No. 30704	70
Rear Weight Kit No. 24-5780	71
Gear Box Assembly Part No. 68-9880	72
Phenolic Wheel Assembly No. 27-1050 (Optional)	73
52" Blower Kit Model No. 30502 (Opt.)	74-75
62" Blower Kit Model No. 30503 (Opt.)	76-78
Gear Box Assembly Part No. 53-4530	79
9 Cu. Ft. Hopper Assembly Model No. 30504 (Optional)	80
15 Cu. Ft. Hopper Assembly Model No. 30505 (Optional)	81-87
V-Plow Model No. 30750 (Optional)	88
V-Plow Installation Kit Model No. 30749 (Optional)	89
Weight Box Kit No. 62-6590 (Optional)	90
Wheel Weight Kit Model No. 11-0440 (Optional)	91