TORO®

MODEL NO. 51652-1000001 & UP

PARTS CATALOG

TC 3105 GAS TRIMMER

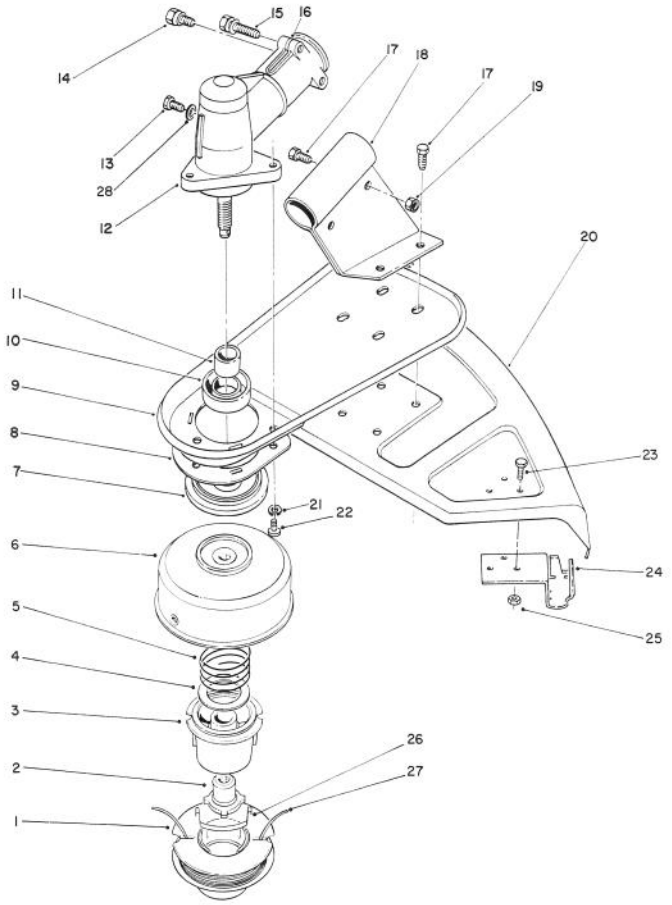

C-0814

CUTTER HEAD & GEAR BOX ASSEMBLY

Ref. No.	Part No.	Description	No. Used
1	83-4650	Spool - Prewound .08 Dia. 38' (Incl. Ref. #26)	1
2	61-4560	Driver L.H.	1
3	33-6230	Core - Spool	1
4	3256-42	Washer	1
5	33-6460	Spring	1
6	46-2650	Drum w/Eyelet	1
7	48-2080	Cap - Dust	1
8	57-5540	Guard - Grass Wrap	1
9	47-2800	Support - Shield	1
10	48-2090	Seal - Oil	1
11	48-2100	Sleeve - Spline	1
12	82-2580	Gear Box Assembly	1
		(Incl. Ref.#10,11, & 13-16)	1

Ref. No.	Part No.	Description	No. Used
13	48-2110	Screw - Hex. Hd.	11
14	48-2150	Screw - Hex. Hd.	1
15	48-2130	Screw - Hex. Hd.	2
16	48-2140	Washer - Flat	2
17	32105-8	Screw - Hex. Hd.	6
18	47-2760	Bracket - Shield	1
19	3296-2	Nut - Lock	6
20	61-4571	Shield - Grass	1
21	55-8050	Washer - Lock	3
22	57-5550	Screw - Guard	3
23	32105-8	Screw	3
24	61-4540	Bracket & Knife Blade Ass;y (Incl. Ref. #23-25)	1
25	3296-2	Nut - Lock	3

*Not Illustrated

TPS

©The TORO Company - 1991

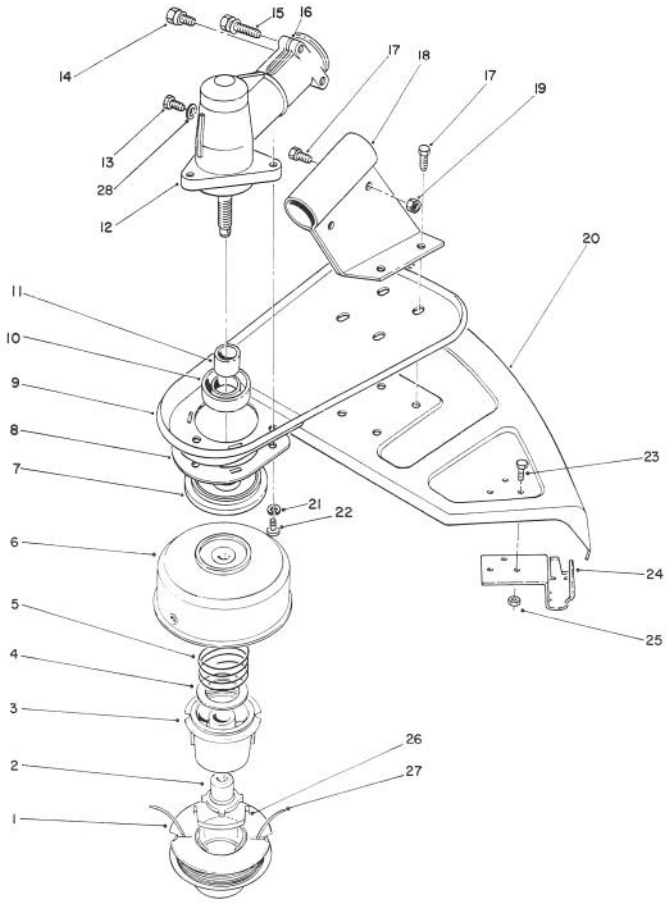

C-0814

TRIMMER HEAD & GEAR BOX ASSEMBLY (Continued)

Ref. No.	Part No.	Description	No. Used
26	33-8940	Saddle - Spool Cap	1
27		Line - Cutting .08 Dia.38	1
*	43-5000	Line - Cutting .08 Dia. (38' Optional)	1
*	46-2710	Line - Cutting .08 Dia. (405' Optional)	1
28	48-2120	Washer	1
*	83-4610	Cutter Head Assembly Tap & Trim (Incl. Ref.#1-6)	1

*Not Illustrated

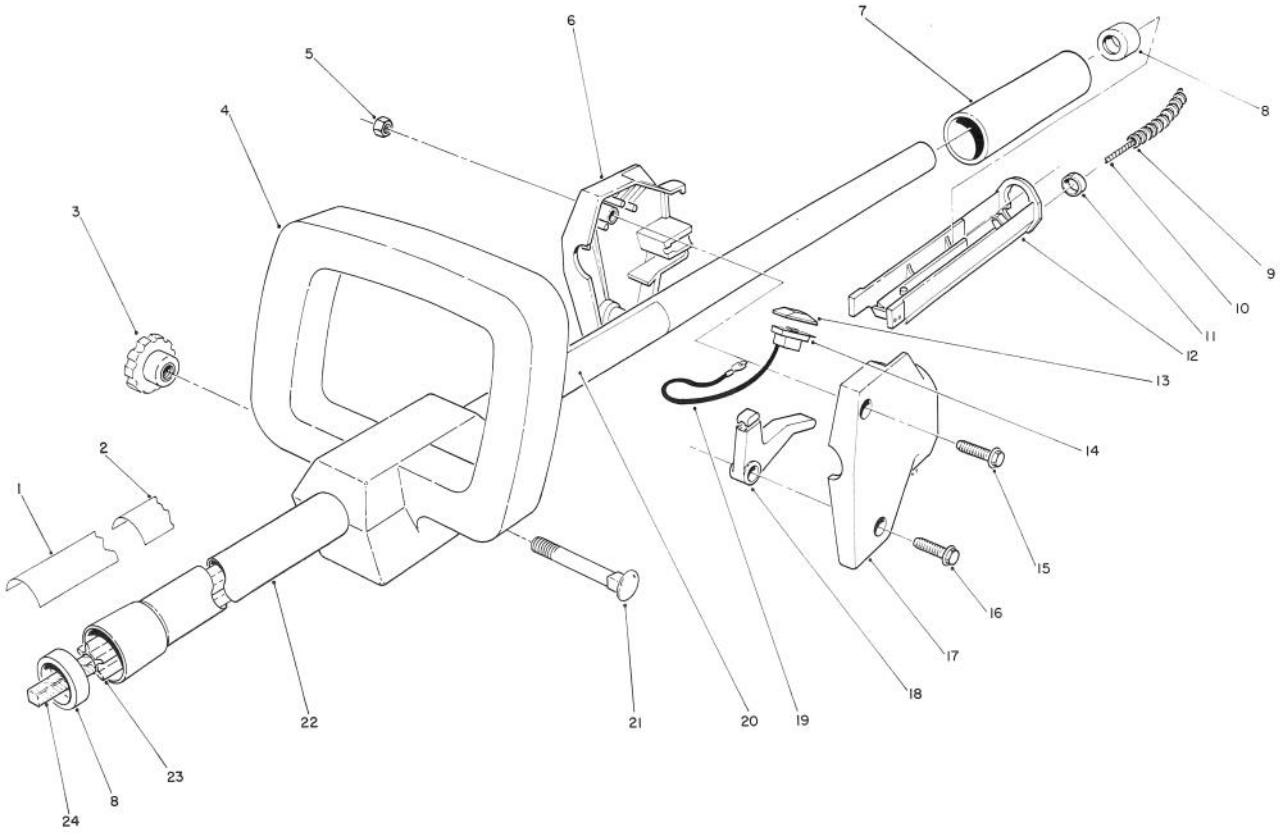

C-0815

HANDLE ASSEMBLY

Ref. No.	Part No.	Description	No. Used
1	82-8720	Decal - TC 3105	1
2	82-6060	Decal -Danger	1
3	19-4050	Knob	1
4	42-5550	Handle - Secondary	1
5	3296-12	Nut - Lock	2
6	57-5481	Housing R.H.	1
7	53-7120	Grip - Drive Housing	1
8	52-4850	Retainer - Casing	2
9	55-8411	Cover - Cable	1
10	76-4370	Cable - Throttle	1
11	2412-48	Clip	2
12	53-7290	Trough	1

Ref. No.	Part No.	Description	No. Used
13	218-557	Cap - Switch	1
14	42-6000	Switch	1
15	32105-12	Screw - Hex. Hd.	1
16	57-5420	Screw - Hex. Hd.	1
17	57-5491	Housing L.H.	1
18	57-7273	Lever - Throttle	1
19	53-7370	Wire	2
20	83-6620	Decal - Instruction	1
21	3-7253	Bolt - Carriage	1
22	82-2570	Tube	1
23	82-6160	Spacer - Shaft	1
24	82-8480	Shaft - Drive, Wound	1

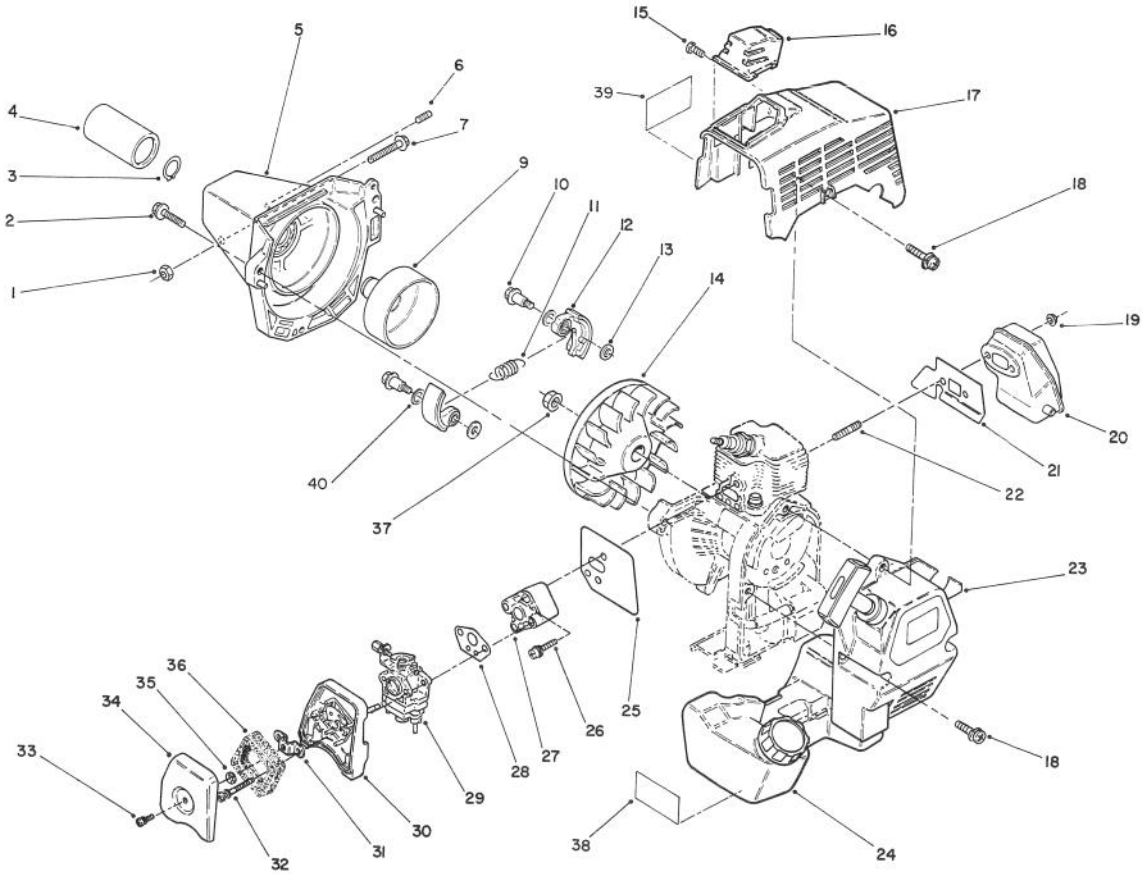

C-0582

ENGINE ASSEMBLY

Ref. No.	Part No.	Description	No. Used
1	56-8770	Nut - Lock	1
2	54-4790	Bolt/Washer	3
3	54-4470	Ring - Retaining	1
4	82-8491	Spacer	1
5	77-2160	Housing - Clutch	1
6	3247-10	Screw - Set	1
7	77-2150	Screw/Washer	1
9	60-7640	Clutch - Drum	1
10	82-6040	Bolt Clutch	2
11	54-6230	Spring	1
12	54-6220	Shoe - Clutch	2
*	77-1830	Clutch Assembly (Incl.Ref. #11 & 12)	1
13	77-1840	Washer	2
14	60-7780	Fan	1
15	54-6890	Screw	1
16	77-1190	Guard - Spark Plug	1
17	77-1200	Cover - Engine	1
18	77-1860	Screw/Washer	3
19	77-1790	Nut - Flanged	2
20	77-1780	Muffler	1

Ref. No.	Part No.	Description	No. Used
21	82-6080	Gasket - Muffler	1
22	77-1210	Stud	2
23	82-6180	Recoil Assembly	1
24	77-2080	Fuel Tank Assembly	1
25	77-1460	Gasket - Insulator	1
26	60-7930	Screw/Washer	2
27	77-1450	Insulator	1
28	77-1430	Gasket - Carburetor	1
29	77-1420	Carburetor Assembly	1
30	77-1760	Case - Air Cleaner	1
31	77-1750	Bracket - Cover	1
32	54-4870	Screw/Washer	2
33	60-7680	Screw/Washer	1
34	77-1710	Cover - Air Cleaner	1
35	77-1720	Nut	1
36	77-1730	Element - Air Cleaner	1
37	54-4670	Nut - Conical	1
38	70-9930	Decal - Mix	1
39	65-2690	Decal - Hot	1
40	82-6050	Washer - Wave	2
*		Engine - TM21	1

*Not Illustrated

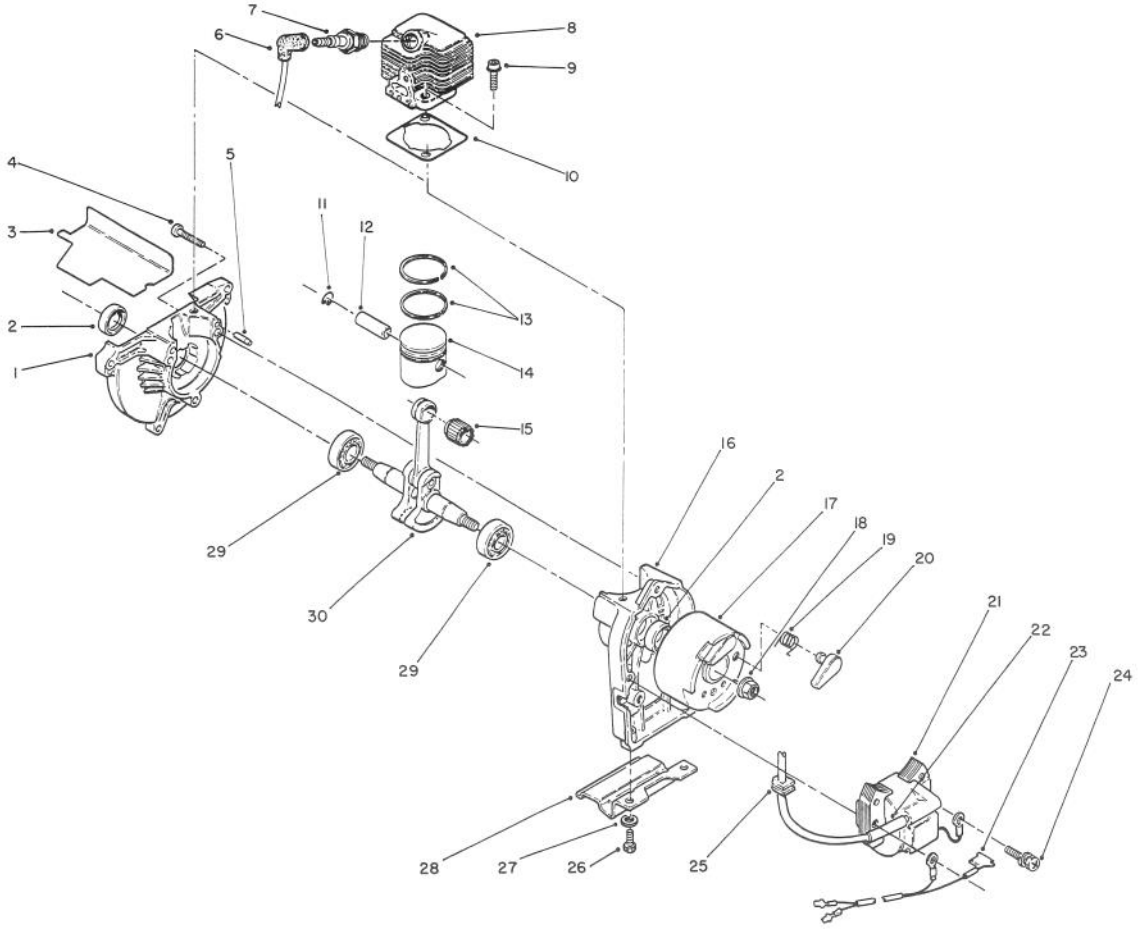

C-0801

ENGINE ASSEMBLY (Continued)

Ref. No.	Part No.	Description	No. Used
1	77-1160	Case - Drive	1
2	54-4380	Seal - Oil	2
3	82-6070	Gasket - Insulator	1
4	54-4330	Screw - Pan Hd.	3
5	60-7590	Pin - Dowel	2
6	77-1340	Boot - Plug	1
7	77-1350	Plug - Spark	1
8	77-1220	Cylinder Head	1
9	60-7720	Bolt - Cylinder Head	2
10	60-7730	Gasket - Cylinder Head	1
11	54-5920	Clip - Piston Pin	2
12	60-7760	Pin - Piston	1
13	60-7740	Set - Piston Ring	1
14	77-1280	Piston Assembly (Incl. Ref.#12)	1
15	54-5930	Bearing - Needle	1

Ref. No.	Part No.	Description	No. Used
16	60-7600	Case - Starter	1
17	77-1360	Flywheel Assembly (Incl. Ref.#19 & 20)	1
18	54-4670	Nut - Conical	1
19	77-1370	Spring - Return	1
20	77-1380	Ratchet	1
21	77-1400	Coil - Ignition	1
22	77-2180	Tube	1
23	77-2190	Wire Assembly	1
24	54-4790	Bolt/Washer	2
25	60-7840	Grommet	1
26	46-0053	Screw	2
27	3254-8	Washer - Lock	2
28	82-6110	Stand	1
29	54-4360	Bearing - Main	2
30	77-1330	Crankshaft Assembly	1

*Not Illustrated

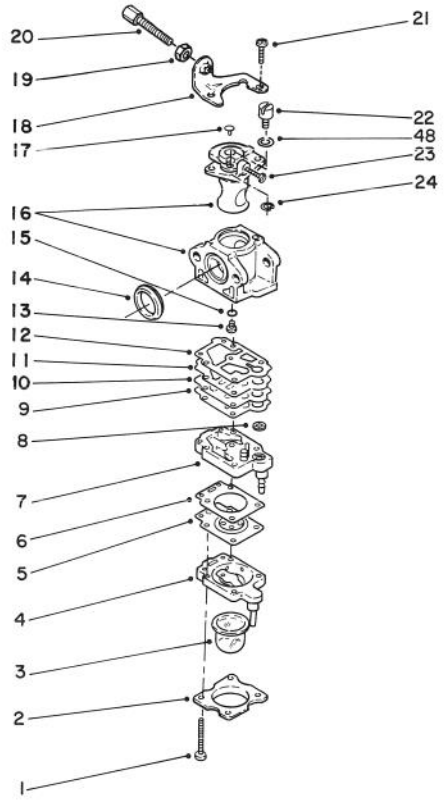

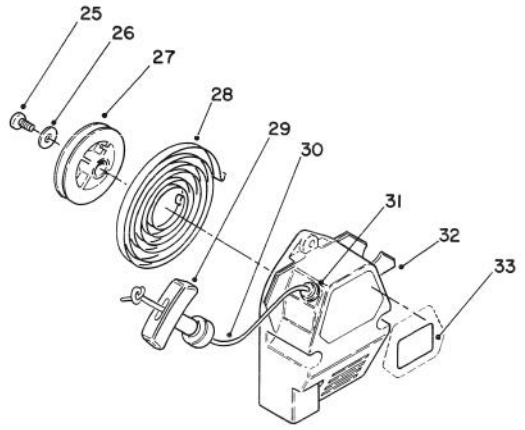

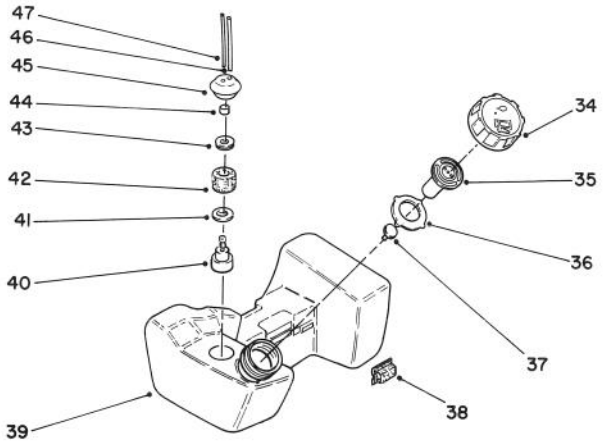

C-0585

ENGINE ASSEMBLY (Continued)

Ref. No.	Part No.	Description	No. Used
1	77-1690	Screw	4
2	77-1680	Cover - Primer	1
3	77-1670	Bulb - Primer	1
4	77-1660	Body - Primer	1
5	77-1650	Diaphragm	1
6	77-1640	Gasket - Diaphragm	1
7	77-1630	Body Assembly (Incl. Ref.#8)	1
8	77-1620	Screen	1
9	77-1610	Gasket - Pump	1
10	77-1600	Plate	1
11	77-1590	Diaphragm	1
12	77-1580	Gasket - Diaphragm	1
13	77-1570	Jet - Main #43	1
*	82-2540	Jet - High Altitude #41	1
14	77-1550	Gasket	1
15	77-1560	"O"Ring - Main Jet	1
16		Body - Carburetor(Ref.)	1
17	77-1530	Plug	1
18	77-1490	Bracket	1
19	77-1480	Nut - Lock	1

Ref. No.	Part No.	Description	No. Used
20	77-1470	Screw - Adjustment	1
21	77-1500	Screw	1
22	77-1510	Swivel - Cable	1
23	77-1540	Valve - Throttle	1
24	77-1520	Clip	1
*	77-1420	Carburetor Assembly (Incl. Ref. #1 - 24 & 48)	1
*	77-2110	Kit - Carburetor Repair (Incl. Ref. #5,6,8,9,11-15 & #28 page 4)	1
25	60-8220	Screw	1
26	65-4470	Washer	1
27	60-8230	Reel	1
28	54-5420	Spring - Recoil	1
29	54-5440	Handle - Recoil	1
30	54-6370	Rope - Recoil	1
31	77-1930	Guide - Rope	1
32	82-6170	Case - Recoil	1
33	76-0790	Decal - Toro	1
*	82-6180	Recoil Assembly (Incl. Ref. #25-32)	1

*Not Illustrated

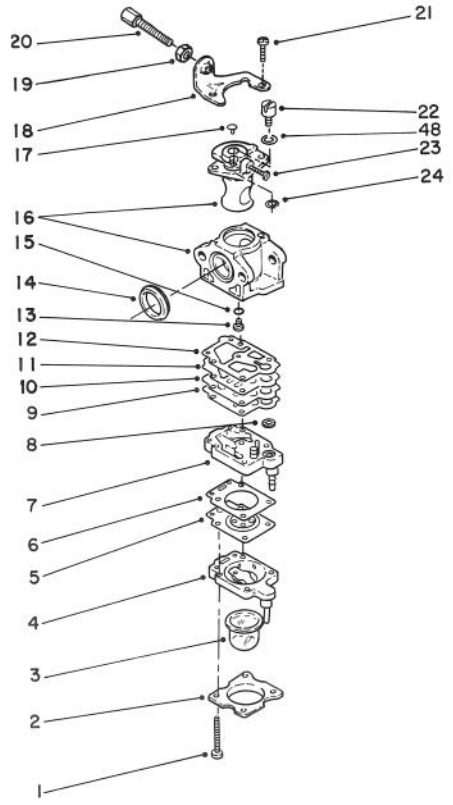

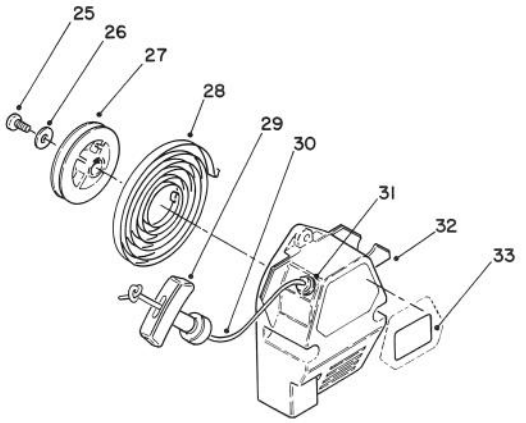

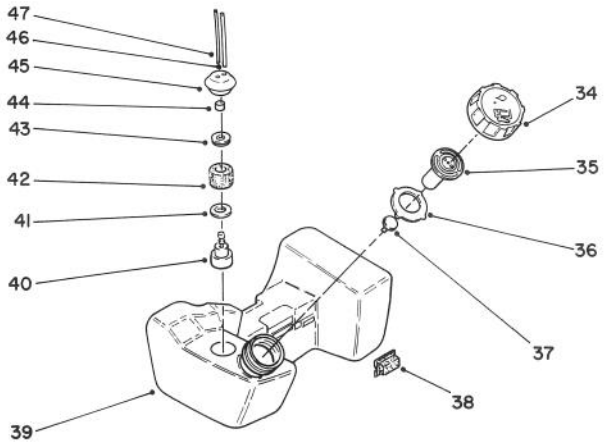

C-0585

ENGINE ASSEMBLY (Continued)

Ref. No.	Part No.	Description	No. Used
34	77-1990	Cap - Fuel	1
35	77-2000	Valve - Breather	1
36	77-2010	Gasket	1
37	77-2020	Cap - Valve	1
*	77-1980	Cap Assembly (Incl. Ref. #34-37)	1
38	60-8280	Pad	4
39	77-2080	Tank Assembly - Fuel (Incl. Ref. #34-37 & 40-47)	1
40	77-2070	Weight - Filter	1

Ref. No.	Part No.	Description	No. Used
41	77-2060	Washer - Seal	1
42	77-2050	Filter - Fuel	1
43	77-2040	Washer - Seal	1
44	77-1970	Collar	1
45	77-2030	Grommet - Fuel Tank	1
46	54-6390	Hose - Fuel	1
47	77-1960	Tube - Fuel Return	1
48	77-9900	Washer	1
*	77-2100	Filter Assembly - Fuel (Incl. Ref. #40-44)	1

*Not Illustrated

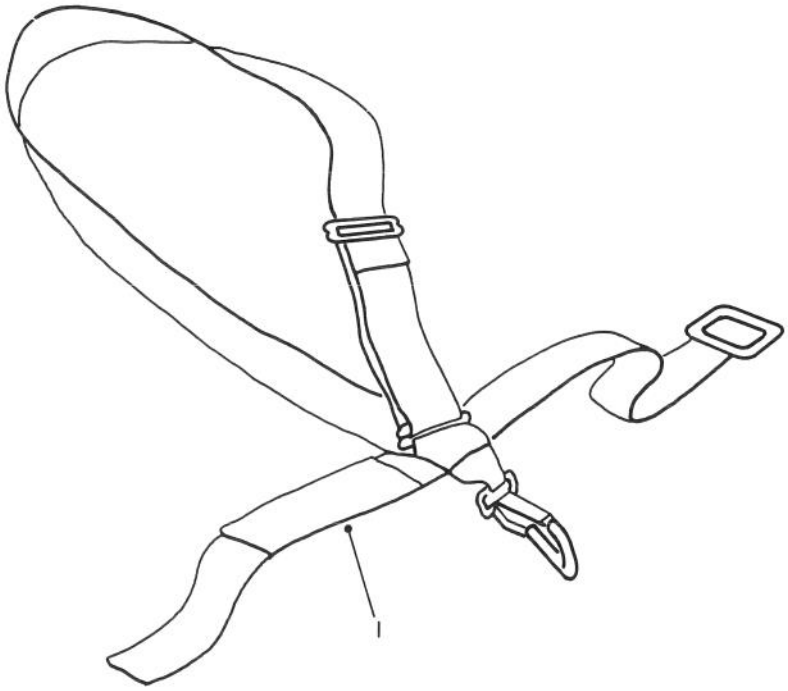

C-0817

DELUXE SHOULDER / WAIST HARNESS (Optional)

Ref. No.	Part No.	Description	No. Used
1	46-2961	Deluxe Harness	1

Ref. No.	Part No.	Description	No. Used

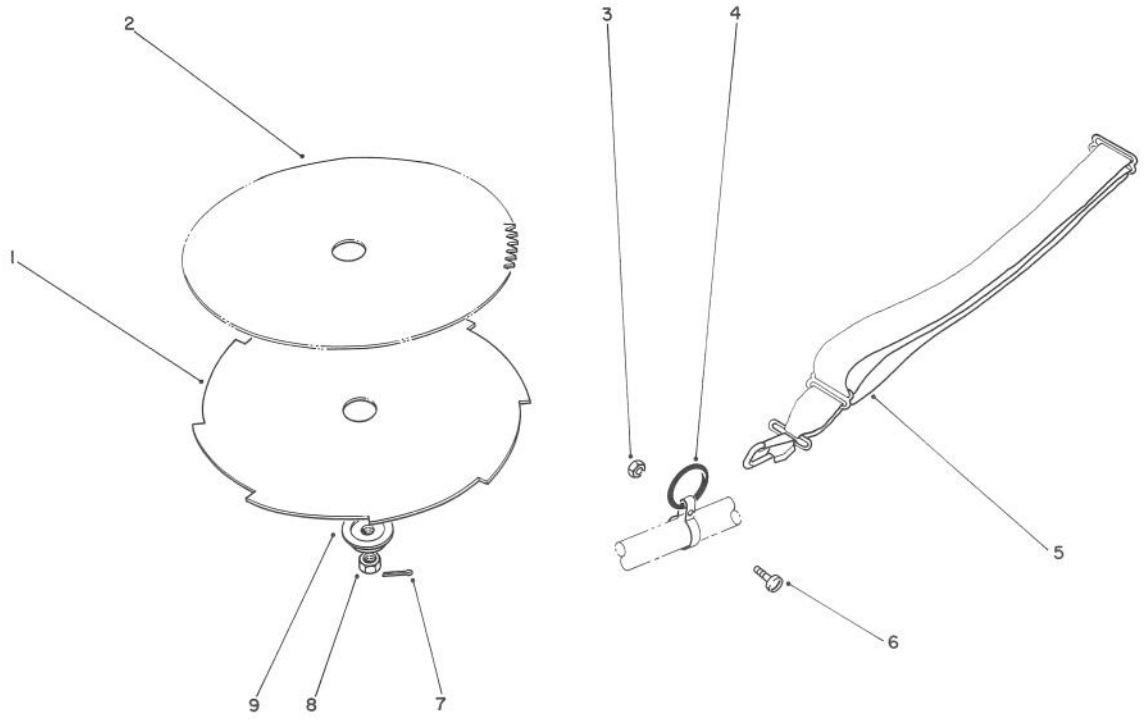

C-0816

SAW AND BRUSH BLADE(Optional)

Ref. No.	Part No.	Description	No. Used
1	51-1240	8''Dia.Blade (8 Tooth)	1
2	51-1230	8''Dia.Blade (80 Tooth)	1
3	3296-12	Nut - Lock	1
4	44-7540	Ring - Harness	1
5	46-2951	Strap - Shoulder	1
6	3251-4	Screw	1
7	3272-3	Pin - Cotter	1

Ref. No.	Part No.	Description	No. Used
8	41-5410	Nut L.H.	1
9		Adapter - Blade	1
*	82-6100	Kit - Brush Blade (Incl. Ref. #1 & 3-9)	1
*	46-2690	Kit - Harness Ring (Incl. Ref. #3,4 & 6)	1

*Not Illustrated

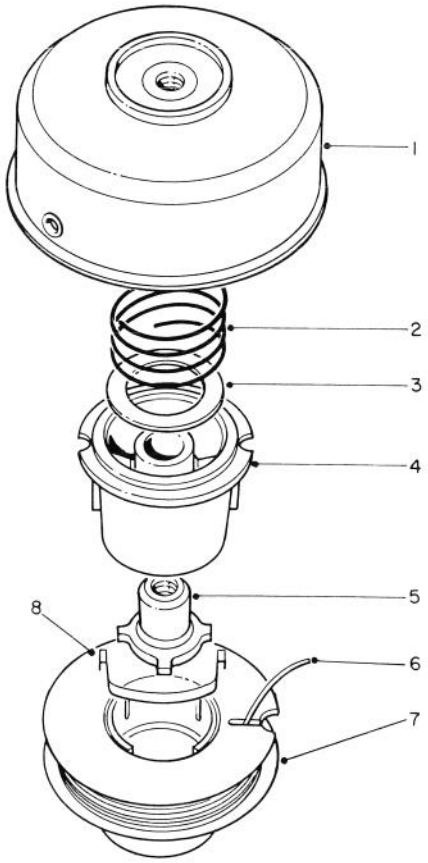

C-0789

SINGLE LINE BUMP & FEED CUTTER HEAD

Ref. No.	Part No.	Description	No. Used
1	46-2651	Drum w/Eyelet	1
2	33-6460	Spring	1
3	3256-42	Washer	1
4	33-6230	Core - Spool	1
5	61-4560	Driver L.H.	1
6		Line - Cutting .095 Dia.	1
*	41-6820	Line - Cutting .095 Dia. (285' Optional)	1

Ref. No.	Part No.	Description	No. Used
7	83-4660	Spool Prewound .95 Dia. 30' (Incl. Ref. #8)	1
8	33-8940	Saddle - Spool Cap	1
*	83-4600	Cutter Head Assembly (Incl. Ref. #1-7)	1

* Not Illustrated

PRODUCT CHANGES

In an effort to make improvements available to TORO owners as quickly as possible, minor changes are incorporated into Toro's products from time to time that do not become immediately shown in the Parts Catalog. If such a change has been made in your unit, which is not reflected in your manual, see your TORO Distributor or his Authorized TORO Service Dealer for information and part numbers.

COUNTRIES OTHER THAN THE UNITED STATES OR CANADA

Customers who have purchased TORO products exported from the United States or Canada should contact their Toro Distributor (Dealer) to obtain guarantee policies for your country, province or state. If for any reason you are dissatisfied with your Distributor's service or have difficulty obtaining guarantee information, contact the TORO importer. If all other remedies fail, you may contact us at The Toro Company.

MAINTENANCE RECORD

Date								

Compliance with Radio Interference Regulations Certified.
Certifie Conforme au Reglement sur le Brouillage Radioelectrique.

P91-1389

Litho in U.S.A.

MAINTENANCE RECORD

Date								