FORM NO. 3314-630

TORO®

MODEL NO 26626-1000001 & UP

PARTS CATALOG

21" S.P. REAR BAGGER

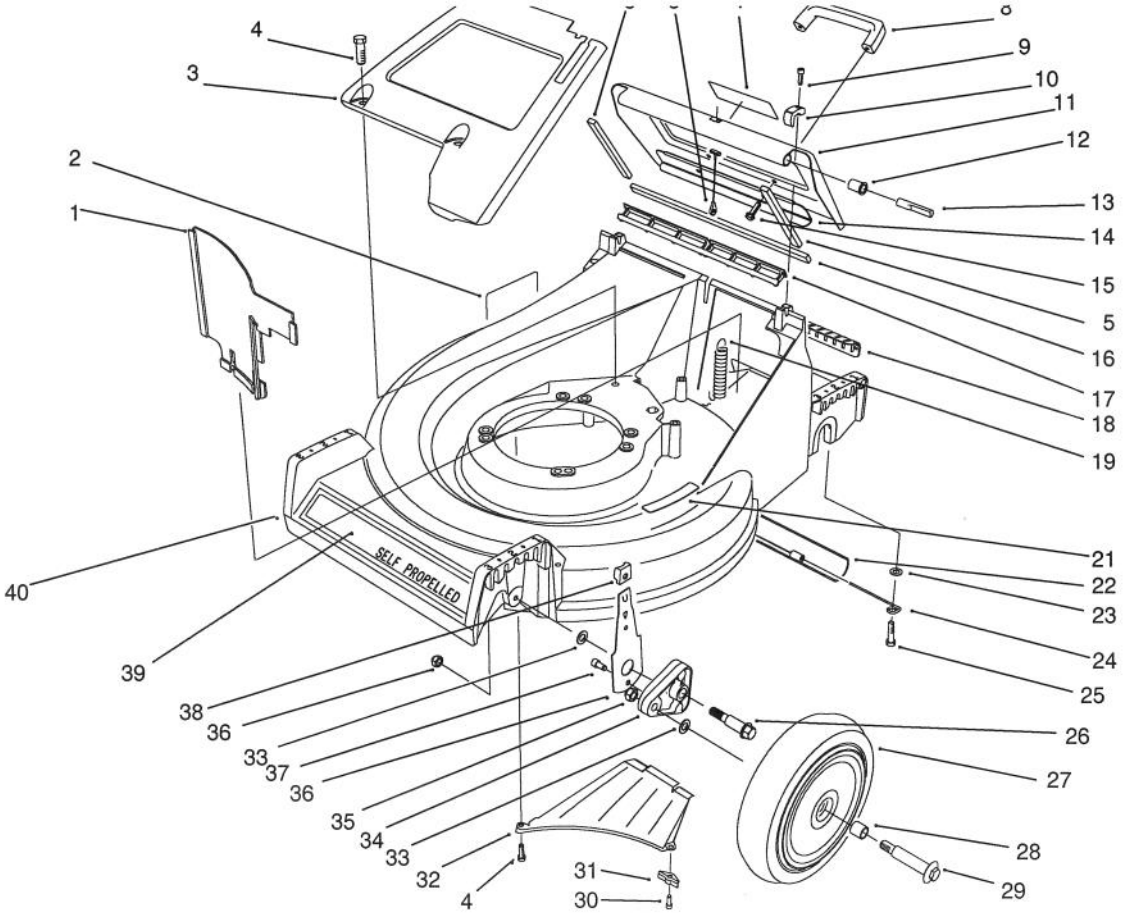

C-0524

HOUSING ASSEMBLY

Ref. No.	Part No.	Description	No. Used
1	66-0020	Panel - Vertical	1
2	56-6270	Decal - Danger	1
3	65-5660	Panel - Screen	1
4	32144-70	Screw - Hex. Hd.	3
5	65-5480	Seal - Door Side	2
6	65-5370	Cable - Door	1
7	71-8370	Decal - Warning	1
8	65-5100	Handle - Door	1
9	65-5210	Screw - Hex. Socket Hd.	2
10	65-5140	Clamp - Hinge	2
11	13-5889	Door - Discharge (Incl. Ref. #5, 7, 14 & 16)	1
12	65-5460	Bushing - Door	2
13	65-5290	Pin - Hinge	2
14	66-0610	Brace - Door	1
15	46-8091	Screw - Handle	2

Ref. No.	Part No.	Description	No. Used
16	65-5490	Seal - Door (End)	1
17	65-5160	Seal - Door	1
18	65-5150	Cover - Access	1
19	65-5360	Spring - Extension	1
21	62-3950	Decal - Step Pad	1
22	65-5350	Shield - Trailing	1
23	3256-23	Washer - Flat	2
24	76-1980	Hanger - Shield	2
25	5-2490	Screw - Shoulder	2
26	66-0560	Screw - Shoulder	2
27	11-9509	Wheel & Tire Assembly (Incl. Ref. #28)	2
28	27-6250	Bushing - Wheel	4
29	27-6231	Bolt - Wheel	2
30	65-5221	Screw - Bracket	1
31	66-0640	Bracket - Discharge	1

TPS

©The TORO Company - 1991

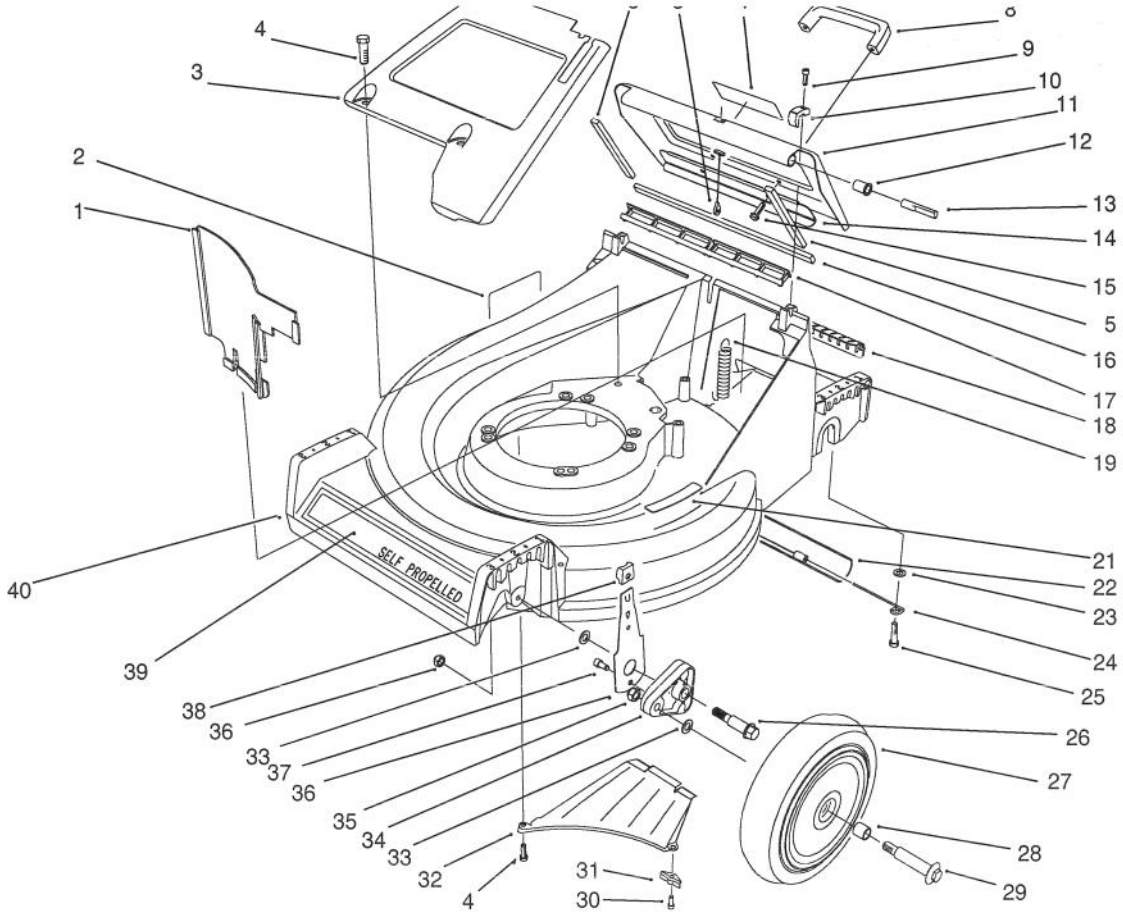

C-0524

HOUSING ASSEMBLY(Continued)

Ref. No.	Part No.	Description	No. Used
32	65-5010	Ramp - Discharge	1
33	40-1940	Washer - Wheel	4
34	66-0580	Arm - Front Pivot	2
35	3296-6	Nut - Lock	4
36	66-0540	Arm - Front Spring	2

Ref. No.	Part No.	Description	No. Used
37	65-5220	Screw - Socket Hd.	2
38	25-7740	Knob - Spring Arm	2
39	82-7890	Decal - 21"	1
40	13-5869	21" Housing Assembly (Incl. Ref. #2 & 21)	1

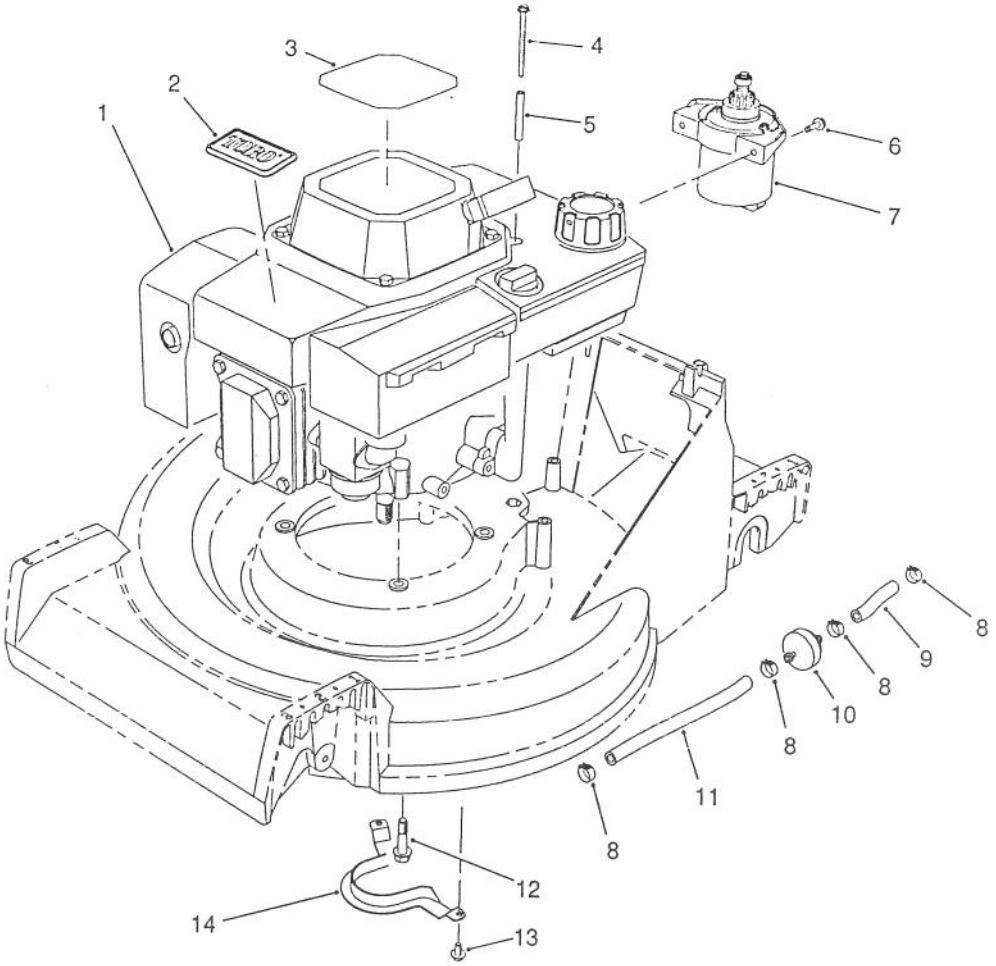

C-0165

ENGINE ASSEMBLY

Ref. No.	Part No.	Description	No. Used
1	72-4142	Engine - OHV	1
2	46-8290	Plate - TORO Logo	1
3	57-3120	Decal - Recoil	1
4	56-6610	Screw - Thread Forming	2
5	57-3830	Spacer - Tubular	2
6	56-6380	Screw - Thread Forming	2
7	53-4500	Starter Motor Assembly	1
8	2412-95	Clamp - Fuel Line	4

Ref. No.	Part No.	Description	No. Used
9	51-3211	Line - Fuel	1
10	56-6360	Filter - Fuel	1
11	51-3214	Line - Fuel	1
12	11-0590	Screw - Hex. Hd.	3
13	32144-70	Screw - Hex. Hd.	2
14	66-0570	Guide - Belt	1
*	75-9850	Tube - Oil Drain	1

*Not Illustrated

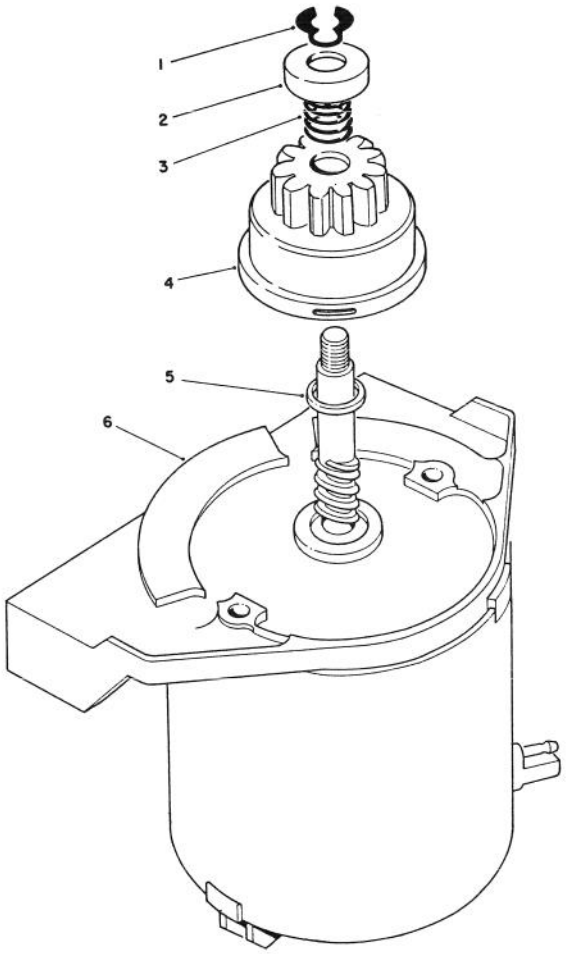

C-0156

STARTER MOTOR ASSEMBLY

Ref. No.	Part No.	Description	No. Used
1	32151-47	Ring - Retaining	1
2	49-2170	Stop - Pinion	1
3	44-0500	Spring - Compression	1
4	43-4870	Pinion Assembly	5
5	23-9591	Spacer	1
6	53-4460	Frame - End	1
*	53-4500	Starter Motor Assembly (Incl. Ref. #1-6)	1

*Not Illustrated

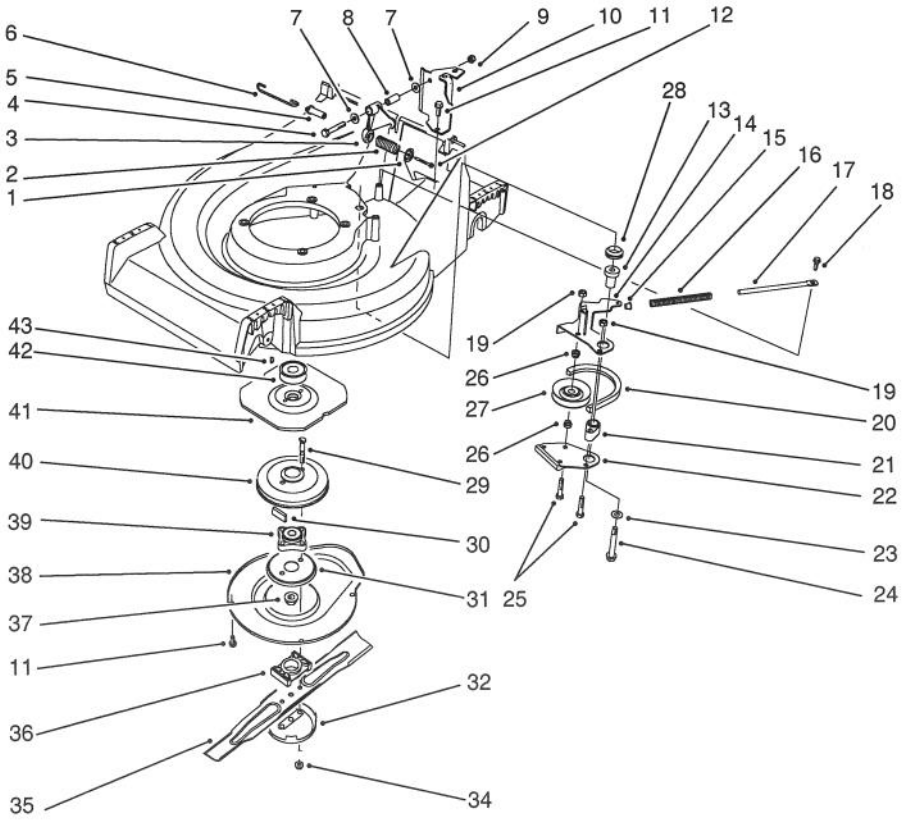

C-0525

BLADE BRAKE CLUTCH ASSEMBLY

Ref. No.	Part No.	Description	No. Used
1	65-5280	Retainer - Spring	1
2	71-3630	Spring - Compression	1
3	65-5700	Crank	1
4	322-21	Screw - Hex. Hd.	1
5	71-3660	Pin - BBC Spring	1
6	71-3650	Link - Control	1
7	3256-23	Washer - Flat	2
8	65-5690	Bushing - Bellcrank	1
9	32128-44	Nut - Lock	1
10	66-0030	Bracket - Cable Support	1
11	32144-70	Screw - Hex. Hd.	5
12	46-7040	Screw - Hex. Hd.	1
13	65-5720	Bushing - BBC	1
14	66-0090	Lever - Brake	1
15	66-0350	Bushing - Flange	1
16	71-3640	Spring - Compression	1
17	65-5320	Rod - Brake Spring	1
18	65-5670	Bolt - Shoulder	1
19	3296-42	Nut - Lock	2
20	65-5740	Belt - BBC	1
21	65-5070	Hub - Brake Plate	1

Ref. No.	Part No.	Description	No. Used
22	65-5780	Brake Plate Assembly	1
23	65-5380	Washer	1
24	11-0580	Screw - Hex. Hd.	1
25	321-13	Screw - Hex. Hd.	2
26	65-5130	Hub - Idler Pulley	2
27	46-5650	Idler Pulley Assembly	1
28	253-151	Seal - V-Ring	1
29	42-3190	Screw - BBC	2
30	52-3480	Dampner - Vibration	2
31	65-5330	Screen - BBC	1
32	80-2770	Cup - Anti Scalp	1
34	54-9190	Nut - Lock	2
35	62-7700	Blade - 21"	1
36	62-4280	Spacer - Blade	1
37	3296-33	Nut - Lock	1
38	65-5200	Cover - BBC	1
39	42-6890	Hub Assembly	1
40	62-3890	Drum - Brake	1
41	65-5300	Flywheel - BBC	1
42	62-7560	Pulley - Engine	1
43	3257-17	Key - Hy-pro	1

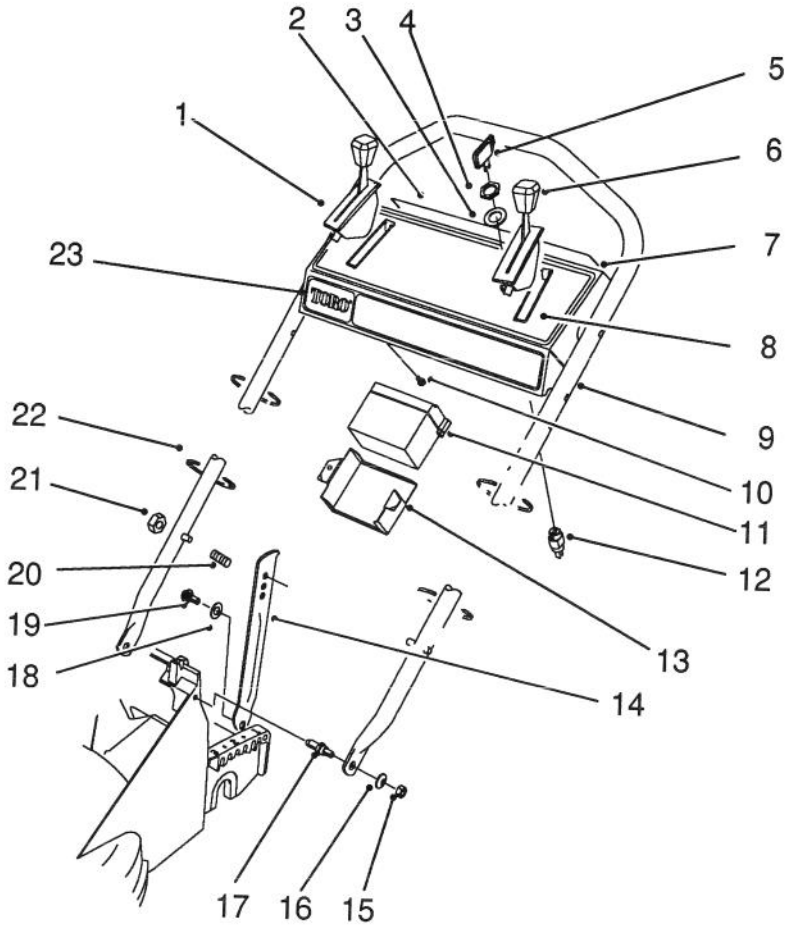

C-0526

HANDLE ASSEMBLY

Ref. No.	Part No.	Description	No. Used
1	76-2710	Control - Ground Speed Bend Type #3 Sheath Lg. 51-1/4" Wire Lg. 2-1/4"	1
2	66-1790	Decal - Danger	1
3	3254-5	Washer - Flat	1
4	218-461	Nut - Lock	1
5	63-8360	Key - Ignition	1
6	66-0230	Control - Throttle Bend Type #1 Sheath Lg. 44-3/4" Wire Lg. 2-3/4"	1
7	13-6539	Control Panel Assembly (Incl. Ref. #2 & 8)	1
8	66-0260	Decal - Instruction	1
9	66-0320	Handle	1

Ref. No.	Part No.	Description	No. Used
10	32104-76	Screw - Self Tapping	4
11	55-7520	Battery Assembly	1
12	46-5780	Switch - Starter	1
13	55-8180	Retainer - Battery	1
14	65-5730	Latch - Handle	2
15	3296-29	Nut - Lock	2
16	3256-23	Washer - Flat	2
17	66-0450	Screw - Shoulder Stud	2
18	256-313	Washer - Nylon	2
19	5-2490	Screw - Shoulder	2
†20	49-2750	Pin - Handle	2
†21	3296-47	Nut - Lock	2
22	3290-378	Tie - Cable	4
23	65-5650	Decal - TORO	1
*	49-8312	Wire Harness	1
*	6-9780	Charger - Battery (110V)	1

†Service Replacement Parts

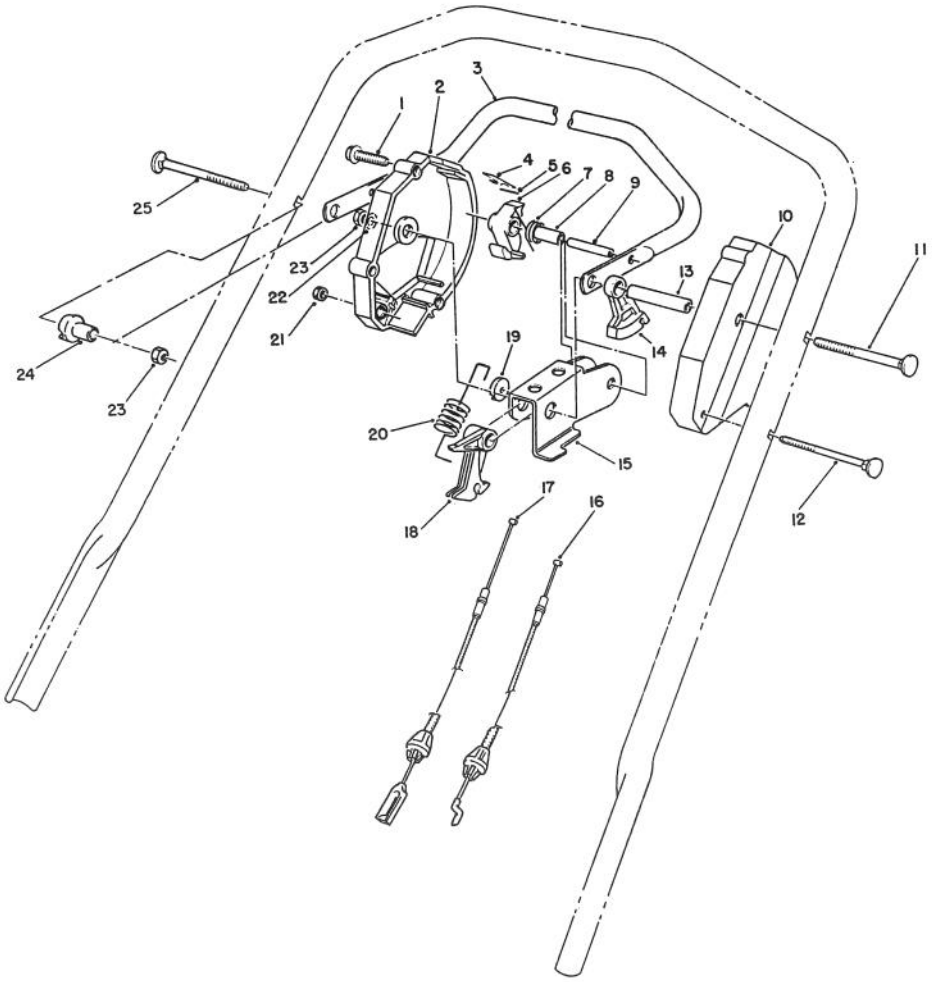

C-0527

TRACTION CONTROL ASSEMBLY

Ref. No.	Part No.	Description	No. Used
1	46-7040	Screw - Hex. Washer Hd.	3
2	66-0160	Housing - Control R.H.	1
3	52-7430	Control Bar Assembly	1
4	52-7410	Spring - Leaf	1
5	57-6290	Pin - Insert	1
6	46-5530	Hook - Control	1
7	46-5510	Spring - Torsion	1
8	46-5550	Bushing - Sleeve	1
9	32121-9	Pin - Coil	1
10	46-5460	Housing - Control (L.H.)	1
11	17-9425	Screw - Handle	1
12	46-6431	Screw - Handle	1
13	46-5590	Spacer	1

Ref. No.	Part No.	Description	No. Used
14	46-5520	Lever - Traction	1
15	66-0180	Rocker	1
16	77-0210	Cable - Traction	1
17	77-0190	Cable - Clutch	1
18	46-5540	Lever - Cable	1
19	66-0170	Washer - Nylon	1
20	66-0190	Spring - Detent	1
21	3296-8	Nut - Lock	1
22	3256-23	Washer - Flat	2
23	3296-58	Nut - Lock	2
24	66-0330	Support - Spacer	1
25	17-9426	Screw - Handle	1

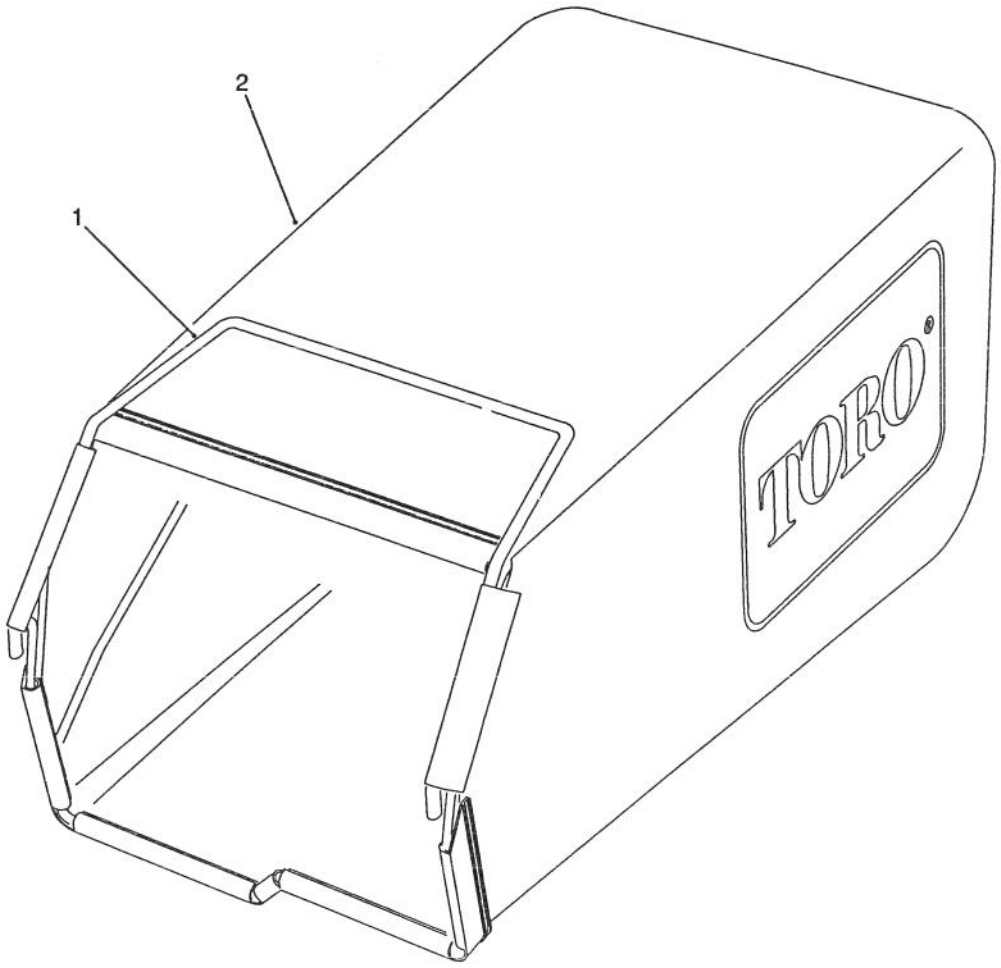

C-0168

GRASS BAG ASSEMBLY

Ref. No.	Part No.	Description	No. Used
1	76-1790	Frame - Grass Bag	1
2	66-0010	Bag	1

Ref. No.	Part No.	Description	No. Used
*	13-6349	Grass Bag Assembly (Incl. Ref. #1 & 2)	1

*Not Illustrated

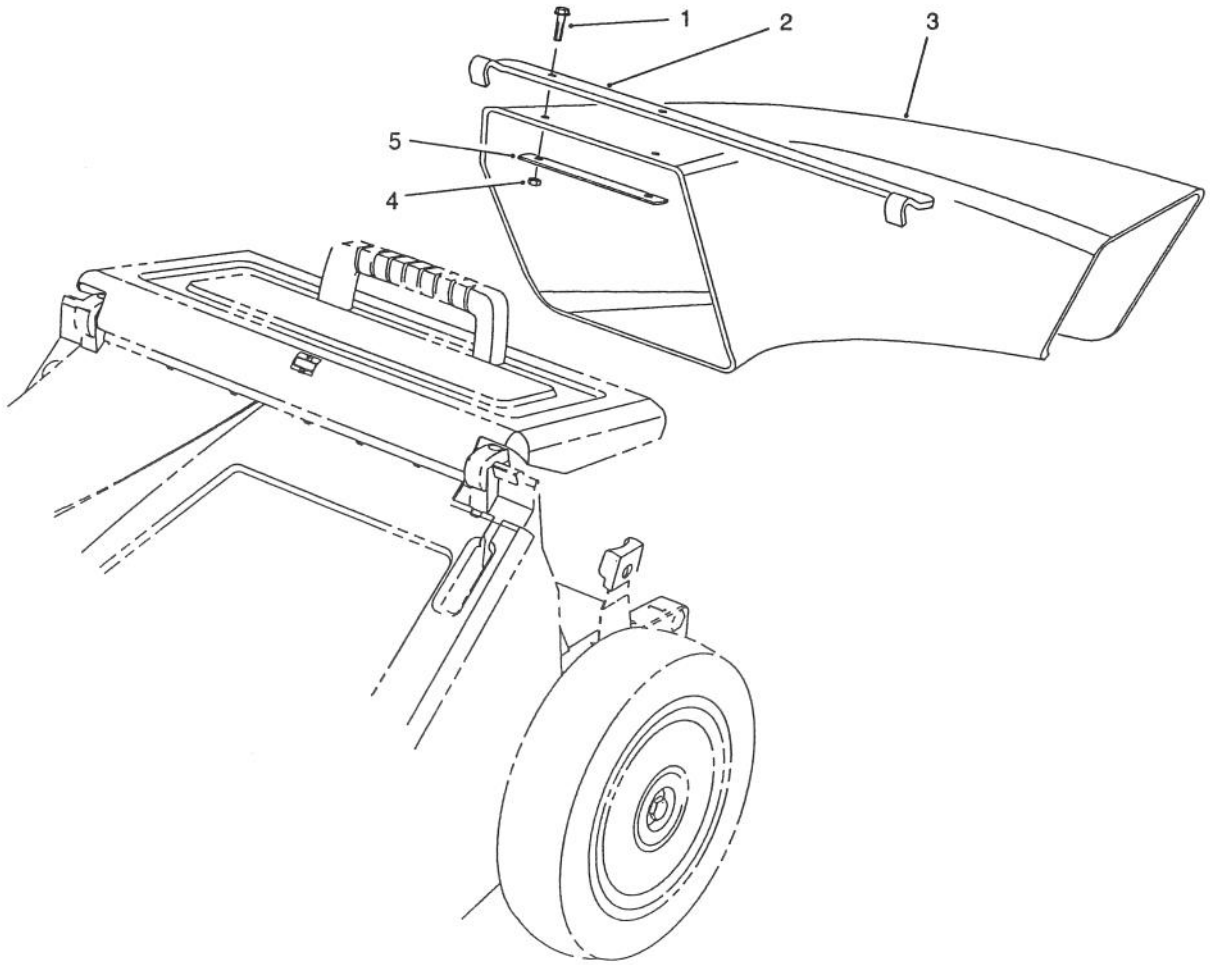

C–0169

SIDE DISCHARGE CHUTE MODEL NO. 59112 (Optional)

Ref. No.	Part No.	Description	No. Used
1	3290–126	Screw – Hex. Washer Hd.	2
2	66–0070	Bracket – Chute Hanger	1
3	65–5240	Chute – Discharge	1

Ref. No.	Part No.	Description	No. Used
4	3296–12	Nut – Lock	2
5	66–0060	Plate – Stress	1

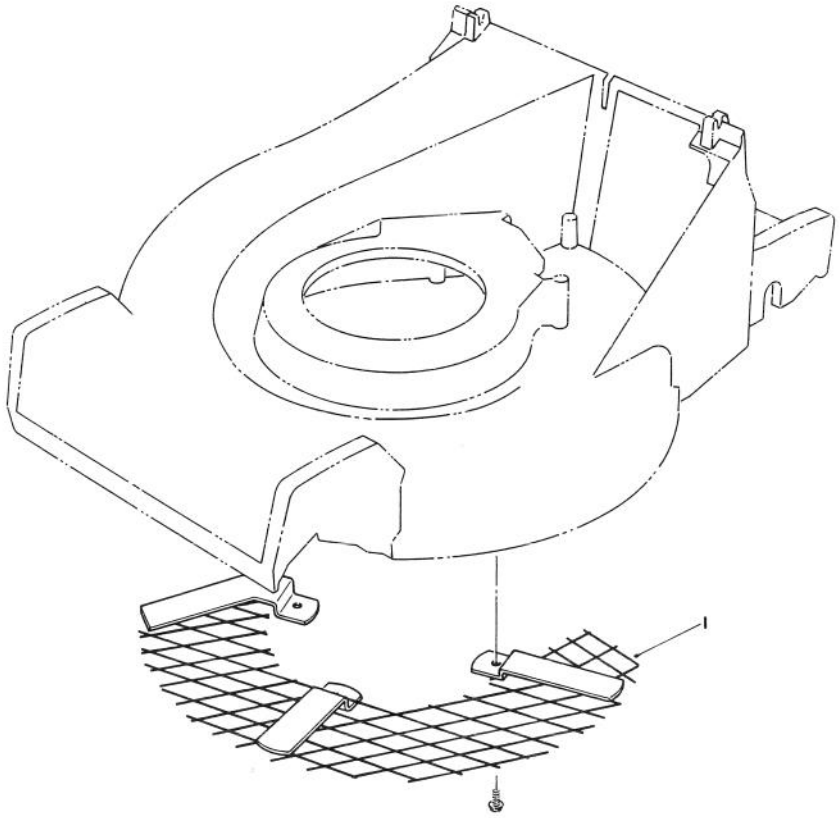

C-0542

LEAF SHREDDER Model No. 59180

Ref. No.	Part No.	Description	No. Used
1	77-0390	Shredder - Leaf	1

Ref. No.	Part No.	Description	No. Used

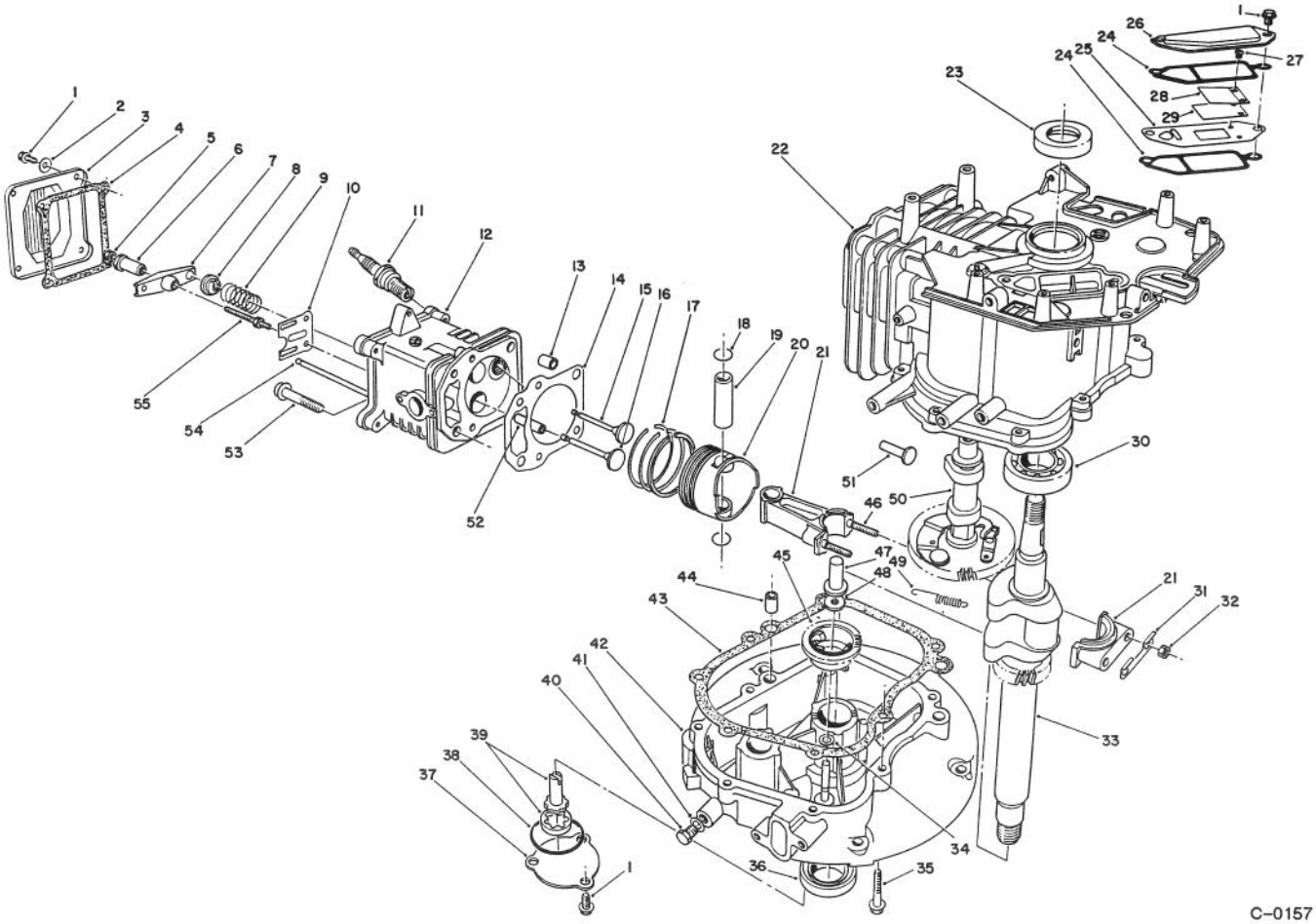

CRANKCASE ASSEMBLY
(Engine Model No. VML0-3)

Ref. No.	Part No.	Description	No. Used
1	81-1170	Bolt	9
2	81-3790	Washer	4
3	81-3780	Cover - Rocker Arm	1
4	81-3770	Gasket - Cover	1
5	81-3760	Nut - Jam	2
6	81-3750	Pivot - Rocker Arm	2
7	81-3740	Arm - Rocker	2
8	81-3730	Retainer - Valve Spring	2
9	81-3720	Spring - Valve	2
10	81-3710	Guide - Push Rod	1
11	81-3250	Plug - Spark	1
12	81-5540	Head - Cylinder (Incl. Ref. #52)	1
13	81-3690	Pin - Dowel	2
14	81-4710	Gasket - Cylinder Head	1
*	81-3820	Gasket Set	1
15	81-3660	Valve - Exhaust	1
16	81-3670	Valve - Intake	1
17	81-3650	Piston Ring Set	1
18	50-0960	Circlip	2
19	81-3630	Pin - Piston	1
20	81-3620	Piston	1
21	81-3390	Connecting Rod Assembly (Incl. Ref. #31, 32 & 46)	1
22	81-3280	Block - Engine (Incl. Ref. #23 & 30)	1
23	81-3290	Seal - Upper Crankshaft	1
24	81-3300	Gasket - Breather	2
25		Plate - Breather	1
26	81-3320	Cover - Breather	1
27		Screw - Reed Valve	2
28		Retainer - Reed Valve	1
29		Valve - Reed	1
*	81-3370	Reed Valve Assembly (Incl. Ref. # 25 & 27-29)	1
30	81-3380	Bearing - Ball	1
31	81-3400	Plate - Lock	1
32	50-0510	Nut	2
33	81-3430	Crankshaft	1
34	81-3440	Washer	1
35	81-3450	Bolt	7
36	81-3460	Seal - Lower Crankshaft	1
37	81-3470	Cover - Oil Pump	1
38	81-3480	Seal - O-Ring	1
39	81-3490	Oil Pump Assembly	1
40	81-4970	Plug - Oil Drain	1

*Not Illustrated

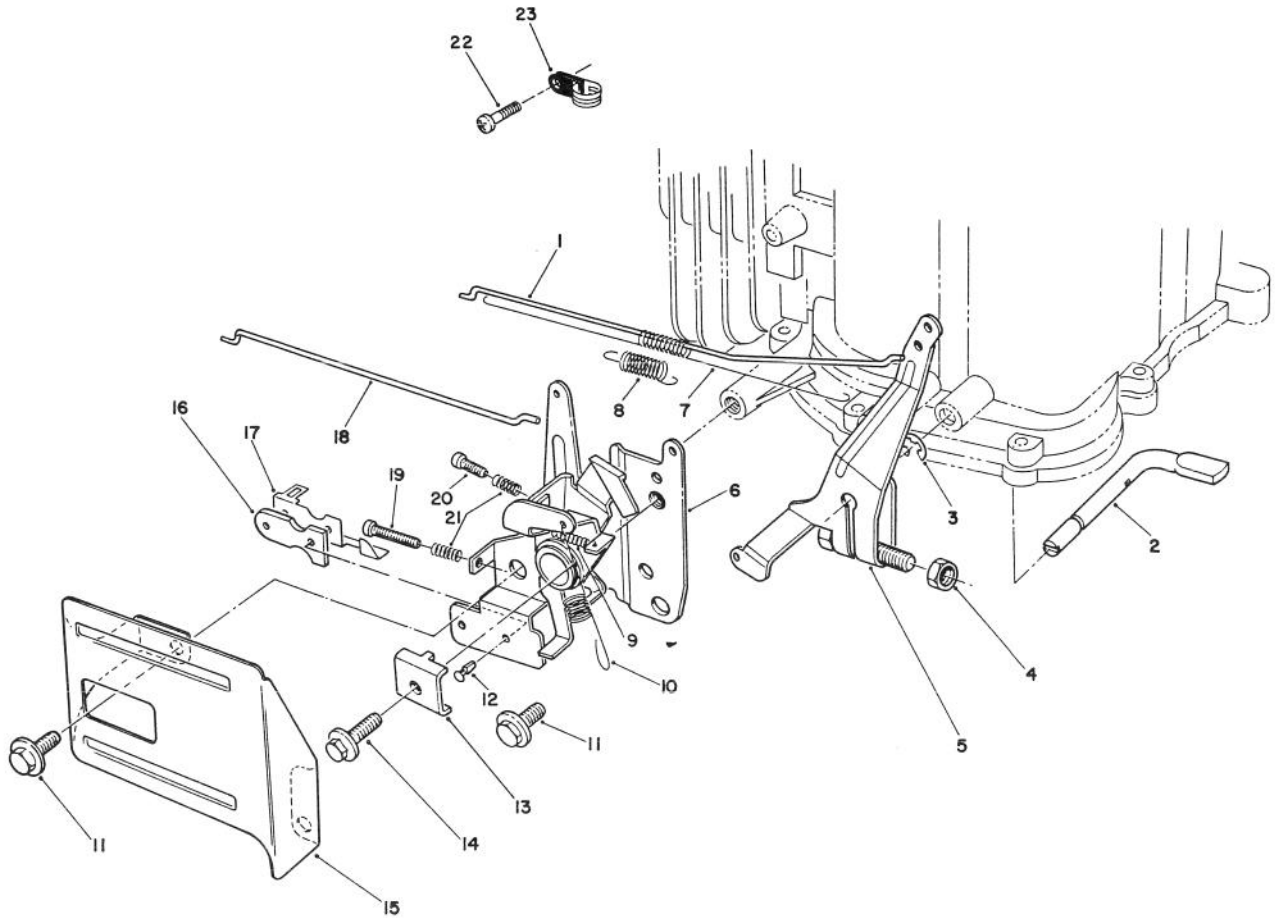

C-0159

GOVERNOR ASSEMBLY
(Engine Model No. VML0-3)

Ref. No.	Part No.	Description	No. Used
1	81-4450	Rod - Carburetor	1
2	81-4480	Shaft - Governor	1
3	81-4540	Ring - Retaining	1
4	81-4490	Nut	1
5	81-4500	Governor Arm Assembly	1
6	81-4510	Throttle & Choke Control	1
7	81-4470	Spring - Carburetor Rod	1
8	81-4460	Spring - Choke Lever	1
9	81-4570	Spring	1
10	81-4520	Spring - Governor	1
11	81-1170	Bolt	2
12	81-4530	Rivet	2

Ref. No.	Part No.	Description	No. Used
13	81-1690	Clamp - Cable	1
14	50-0130	Bolt	1
15	57-5750	Guard - Throttle	1
16	81-1830	Insulator - Kill Switch	1
17	81-1840	Terminal - Switch	1
18	81-4440	Rod - Choke	1
19	81-4560	Screw	1
20	81-4550	Screw	1
21	81-2900	Spring	2
22	81-0380	Screw	1
23	81-4780	Clamp	1

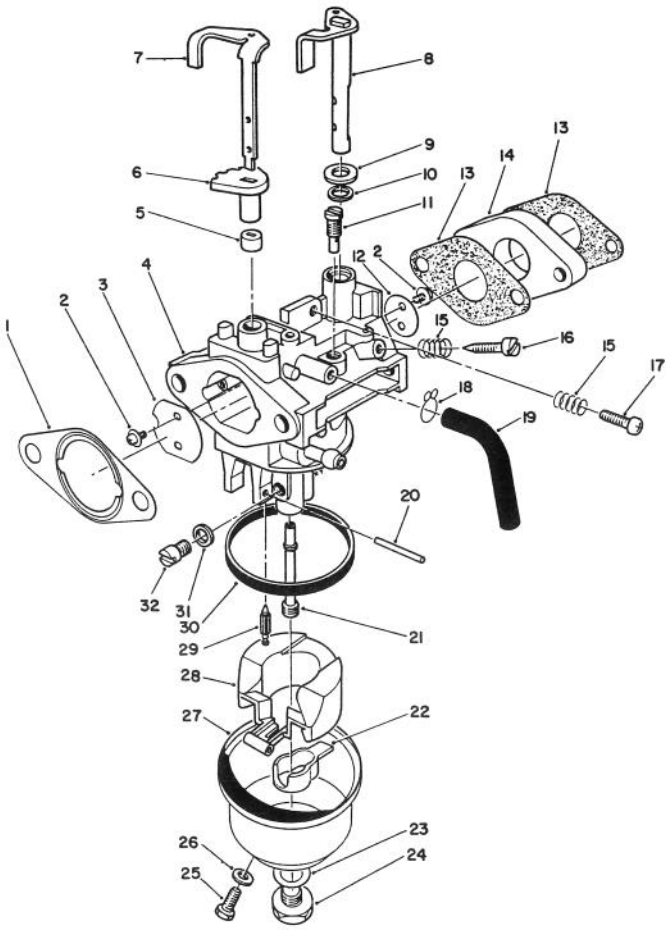

C-0160

CARBURETOR ASSEMBLY (Engine Model No. VML0-3)

Ref. No.	Part No.	Description	No. Used
1	81-4250	Gasket - Air Cleaner	1
2	81-2710	Screw - Choke Valve	4
3	81-2720	Valve - Choke	1
4		Body - Carburetor	1
5	81-5530	Ring - Choke (Lower)	1
6	81-5520	Ring - Choke (Upper)	1
7	81-5500	Shaft - Choke Control	1
8	81-2920	Shaft - Throttle Valve	1
9	81-4280	Washer	1
10	81-4290	Seal - Throttle Shaft	1
11	81-5620	Jet - Pilot (#38.8)	1
12	81-2940	Valve - Throttle	1
13	81-5560	Gasket - Carburetor	2
14	81-5570	Block - Insulator	1
15	81-2580	Spring - Pilot Screw	2
16	50-2360	Screw - Pilot	1
17	50-0250	Screw - Idle Stop	1
18	81-4300	Clamp	1
19	81-4310	Tube - Bowl Vent	1
20	81-5600	Pin - Hinge	1
21	81-5630	Nozzle - Main	1

Ref. No.	Part No.	Description	No. Used
22	81-4940	Spacer - Float	1
23	81-2650	Gasket - Bowl Screw	1
24	81-2660	Screw - Bowl	1
25	81-2670	Screw - Drain	1
26	81-2680	Gasket - Drain Screw	1
27	81-4340	Bowl - Float	1
28	81-4920	Float	1
29	81-4700	Needle	1
30	81-2630	Gasket - Float Bowl	1
31	81-4350	Spacer	1
32	81-5610	Jet - Main (#70)	1
*	81-5640	Jet - Main (#77.5 High Alt.)	1
*	81-4270	Choke Shaft Assembly (Incl. Ref. #5-7)	1
*	81-5650	Carburetor Repair Kit (Incl. Ref. #1, 13, 23, 26, 29 & 30)	1
*	81-5590	Carburetor Assembly (Incl. Ref. #2-32)	1
*	81-5820	Kit - Needle Valve & Seat	1

*Not Illustrated

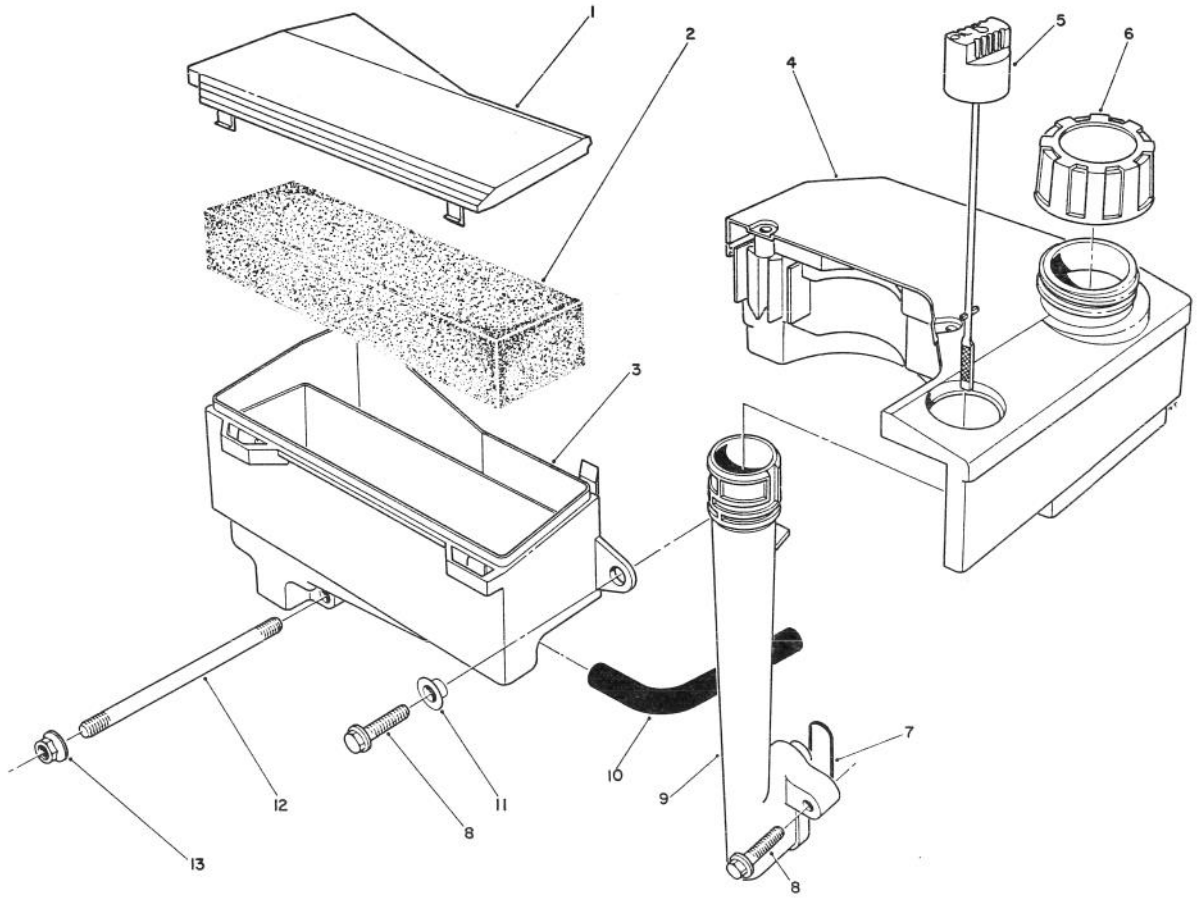

C-0161

AIR CLEANER & FUEL TANK ASSEMBLY (Engine Model No. VML0-3)

Ref. No.	Part No.	Description	No. Used
1	81-4110	Cover - Air Cleaner	1
2	81-4120	Filter - Foam	1
3		Body - Air Cleaner	1
4	55-3530	Tank - Fuel	1
5	81-4140	Dipstick - Oil	1
6	55-3570	Cap - Gas	1
7	81-4150	Seal - Oil Tube	1
8	81-4160	Bolt	3
9	81-4170	Tube - Oil Fill	1
10	81-4180	Hose - Crankcase Breather	1
11	81-4200	Spacer	1
12	81-4220	Stud - Carburetor	2
13	50-7180	Nut	2
*	81-4240	Air Cleaner Assembly (Incl. Ref. #1 & 3)	1

*Not Illustrated

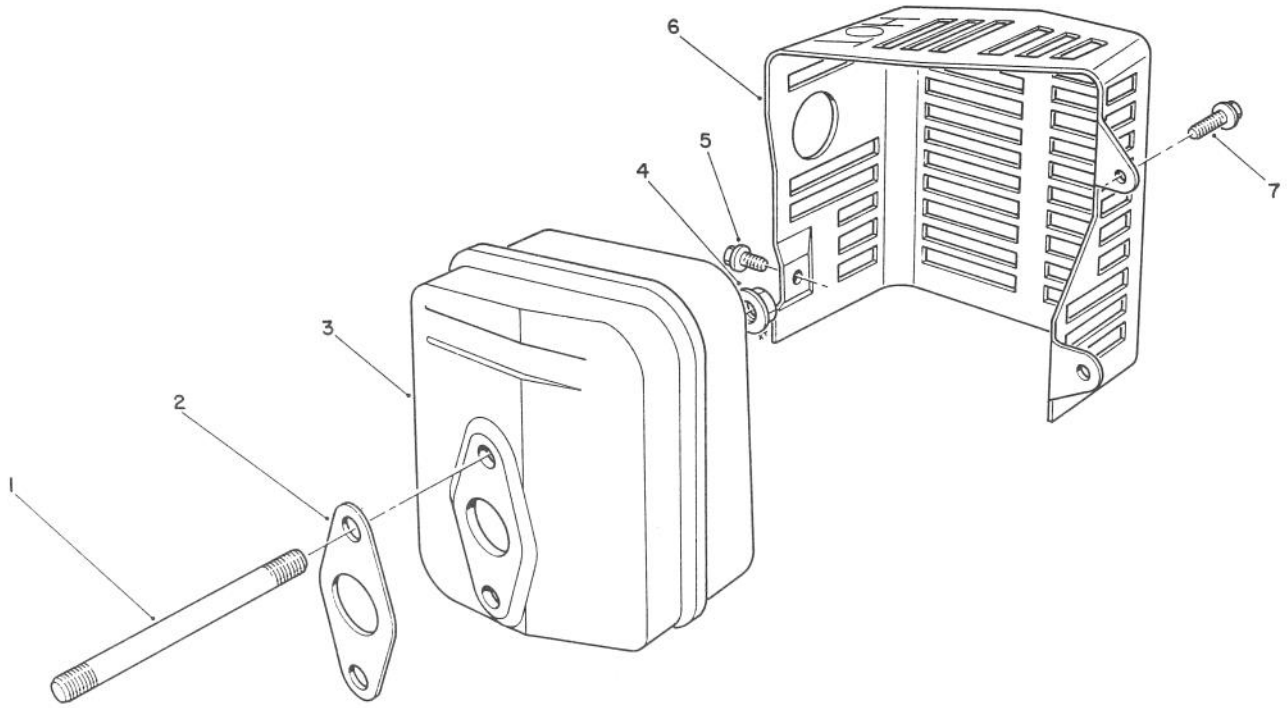

T-0726

MUFFLER ASSEMBLY
(Engine Model No. VML0-3)

Ref. No.	Part No.	Description	No. Used
1	81-4380	Stud - Muffler	2
2	81-4390	Gasket - Muffler	1
3	81-4400	Muffler	1
4	50-0530	Nut	2
5	81-4420	Screw	1

Ref. No.	Part No.	Description	No. Used
6	81-4430	Cover - Muffler	1
7	81-1170	Bolt	2
*	56-6730	Spark Arrester Kit (Incl. Ref. #2) Optional	1

*Not Illustrated

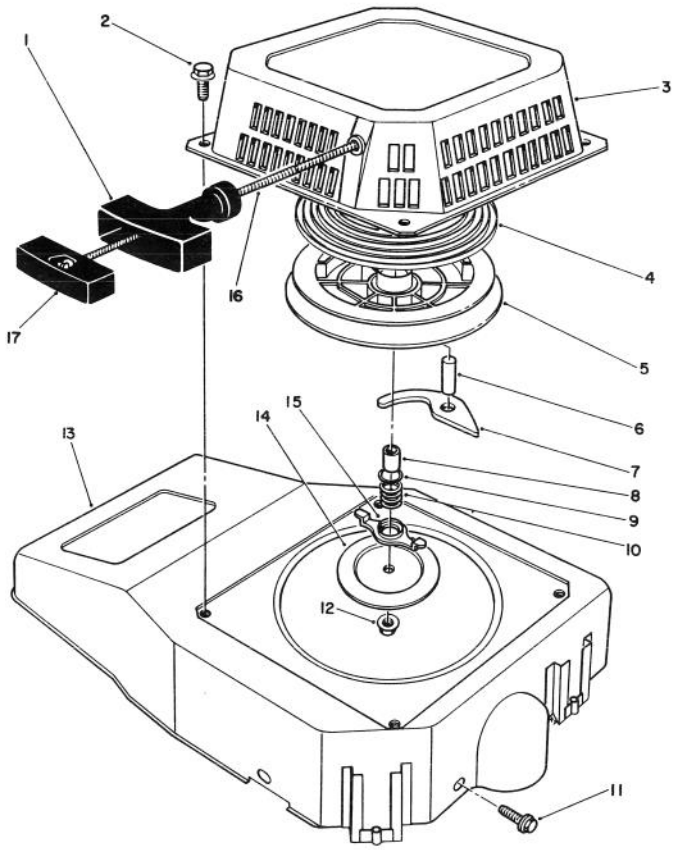

C-0162

RECOIL ASSEMBLY
(Engine Model No. VML0-3)

Ref. No.	Part No.	Description	No. Used
1	81-4000	Handle	1
2	81-1280	Bolt	4
3	81-3970	Case - Recoil	1
4	81-4010	Spring - Recoil	1
5	81-4020	Reel - Rope Pulley	1
6	81-4030	Pin	1
7	81-4040	Pawl	1
8	81-4050	Spacer	1
9	81-4060	Washer	1
10	81-4070	Spring - Friction	1

Ref. No.	Part No.	Description	No. Used
11	81-1170	Bolt	3
12	81-4100	Nut - Lock	1
13	81-3960	Shroud - Blower	1
14	81-4090	Plate - Friction	1
15	81-4080	Guide - Pawl	1
16	81-1270	Rope - Recoil	1
17	81-4960	Retainer - Rope	1
*	81-3270	Recoil Starter Assembly (Incl. Ref. #1, 3-10, 12 & 14-17)	1

*Not Illustrated