FORM NO. 3314-631

TORO®

MODEL NO. 26620BF-1000001 & UP

PARTS CATALOG

53cm REAR BAGGER

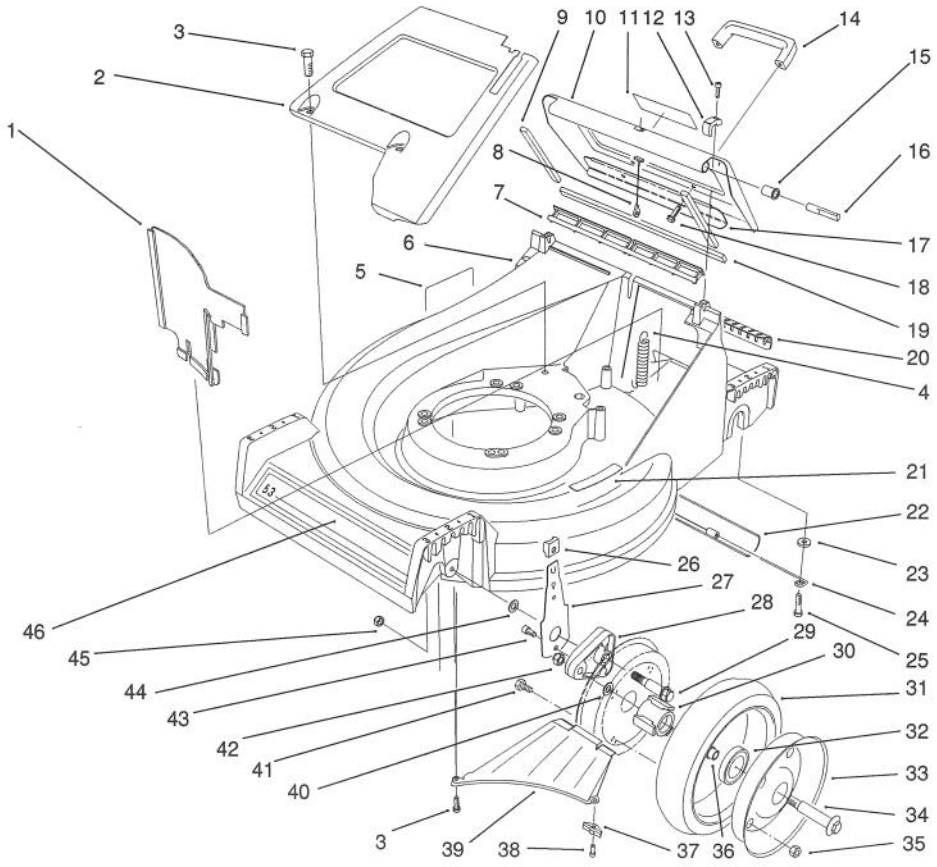

C-0820

HOUSING ASSEMBLY

Ref. No.	Part No.	Description	No. Used
1	66-0020	Panel - Vertical	1
2	65-5660	Panel - Screen	1
3	32144-70	Screw - Hex. Hd.	3
4	65-5360	Spring - Extension	1
5	62-3860	Decal - Danger	1
6	13-5869	Housing - 53cm (Incl. Ref. #5 & 21)	1
7	65-5160	Seal - Door	1
8	65-5370	Cable - Door	1
9	65-5480	Seal - Door Side	2
10	13-5889	Door - Discharge (Incl. Ref. #9, 11, 17 & 19)	1
11	71-8370	Decal - Danger	1
12	65-5140	Clamp - Hinge	2
13	65-5210	Screw - Hex. Socket Hd.	2

Ref. No.	Part No.	Description	No. Used
14	65-5100	Handle - Door	1
15	65-5460	Bushing - Door	2
16	65-5290	Pin - Hinge	2
17	66-0610	Brace - Door	1
18	46-8091	Screw - Handle	2
19	65-5490	Seal - Door (End)	1
20	65-5150	Cover - Access	1
21	62-3950	Decal - Step Pad	1
22	65-5350	Shield - Trailing	1
23	3256-23	Washer - Flat	2
24	76-1980	Hanger - Shield	2
25	5-2490	Screw - Shoulder	2
26	25-7740	Knob - Spring Arm	2
27	66-0540	Arm - Front Spring	2
28	66-0580	Arm - Front Pivot	2

© The TORO Company - 1991

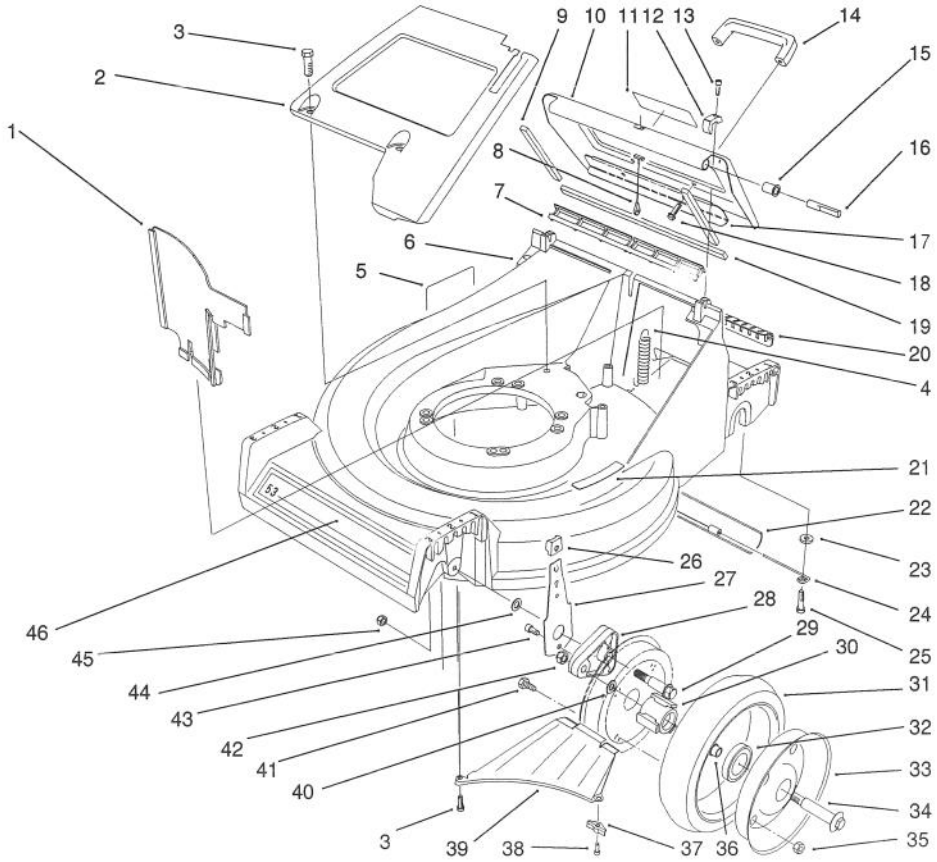

C-0820

HOUSING ASSEMBLY (Continued)

Ref. No.	Part No.	Description	No. Used
29	66-0560	Screw - Shoulder	2
30	52-2410	Hub - Support, Bearing	2
31	53-7740	Tire	2
32	52-2450	Bearing	4
33	53-7780	Plate - Wheel Half	4
*	53-7720	Wheel & Tire Assembly (Incl. Ref. #31-33 & 35)	2
34	323-13	Bolt - Wheel	2
35	3296-42	Nut - Lock	8
36	52-2440	Spacer - Bearing	2

Ref. No.	Part No.	Description	No. Used
37	66-0640	Bracket - Discharge	1
38	65-5221	Screw - Bracket	1
39	65-5010	Ramp - Discharge	1
40	52-2480	Spacer - Wheel	2
41	321-2	Screw - Hex. Hd.	8
42	3296-39	Nut Lock	1
43	65-5220	Screw - Socket Hd.	2
44	40-1940	Washer - Wheel	4
45	3296-6	Nut - Lock	4
46	70-7590	Decal - 53cm	1

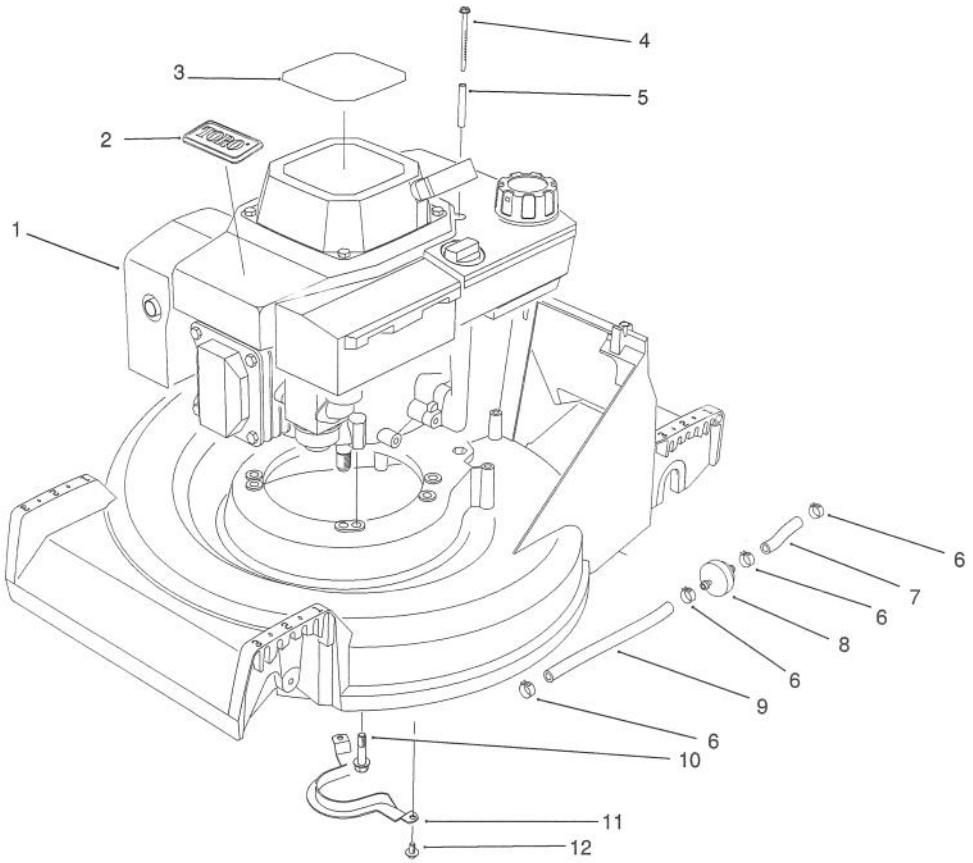

C-0181

ENGINE ASSEMBLY

Ref. No.	Part No.	Description	No. Used
1	77-2810	Engine - OHV	1
2	46-8290	Plate - TORO	1
3	57-3120	Decal - Recoil	1
4	56-6610	Screw - Thread Forming	2
5	57-3830	Spacer - Tubular	2
6	2412-95	Clamp - Fuel Line	4
7	51-3211	Line - Fuel	1
8	56-6360	Filter - Fuel	1
9	51-3214	Line - Fuel	1
10	11-0590	Screw - Hex. Hd.	3
11	66-0570	Guide - Belt	1
12	32144-70	Screw - Hex. Hd.	2
*	75-9850	Tube - Oil Drain	1

*Not Illustrated

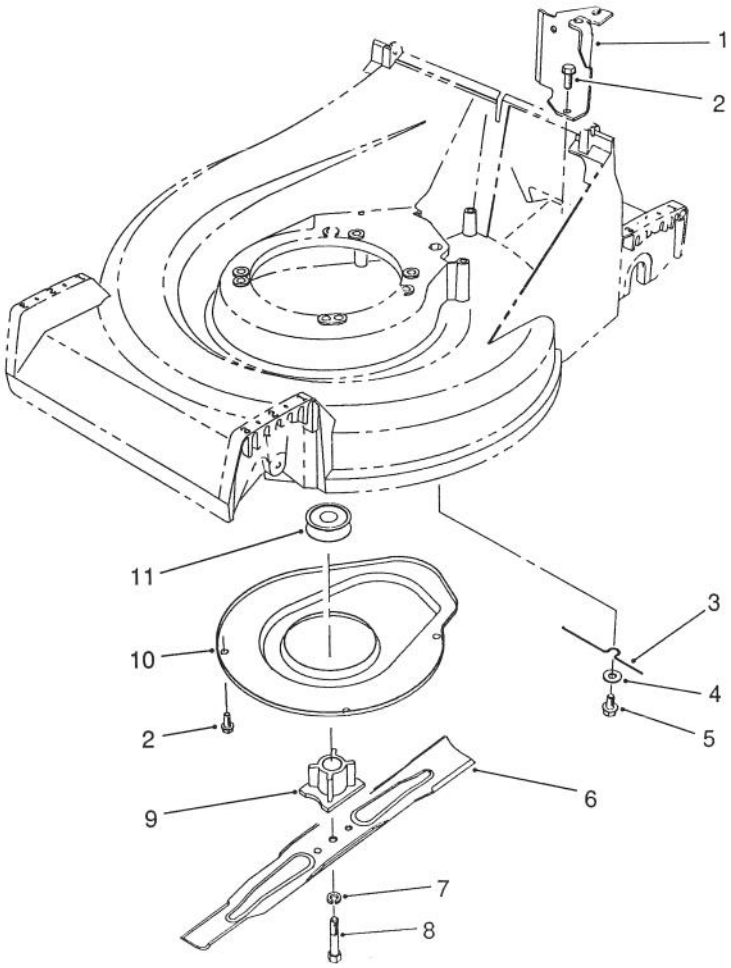

C-0172

BLADE ASSEMBLY

Ref. No.	Part No.	Description	No. Used
1	66-0030	Bracket - Cable Support	1
2	32144-70	Screw - Hex. Hd.	5
3	66-0620	Retainer - Belt	1
4	3256-24	Washer - Flat	1
5	32144-15	Screw - Hex. Flange Hd.	1
6	62-7700	Blade - 21"	1

Ref. No.	Part No.	Description	No. Used
7	3253-22	Washer - Blade	1
8	26-0670	Bolt - Blade	1
9	62-7540	Retainer - Blade	1
10	65-5200	Cover	1
11	62-7550	Pulley - Engine	1

*Not Illustrated

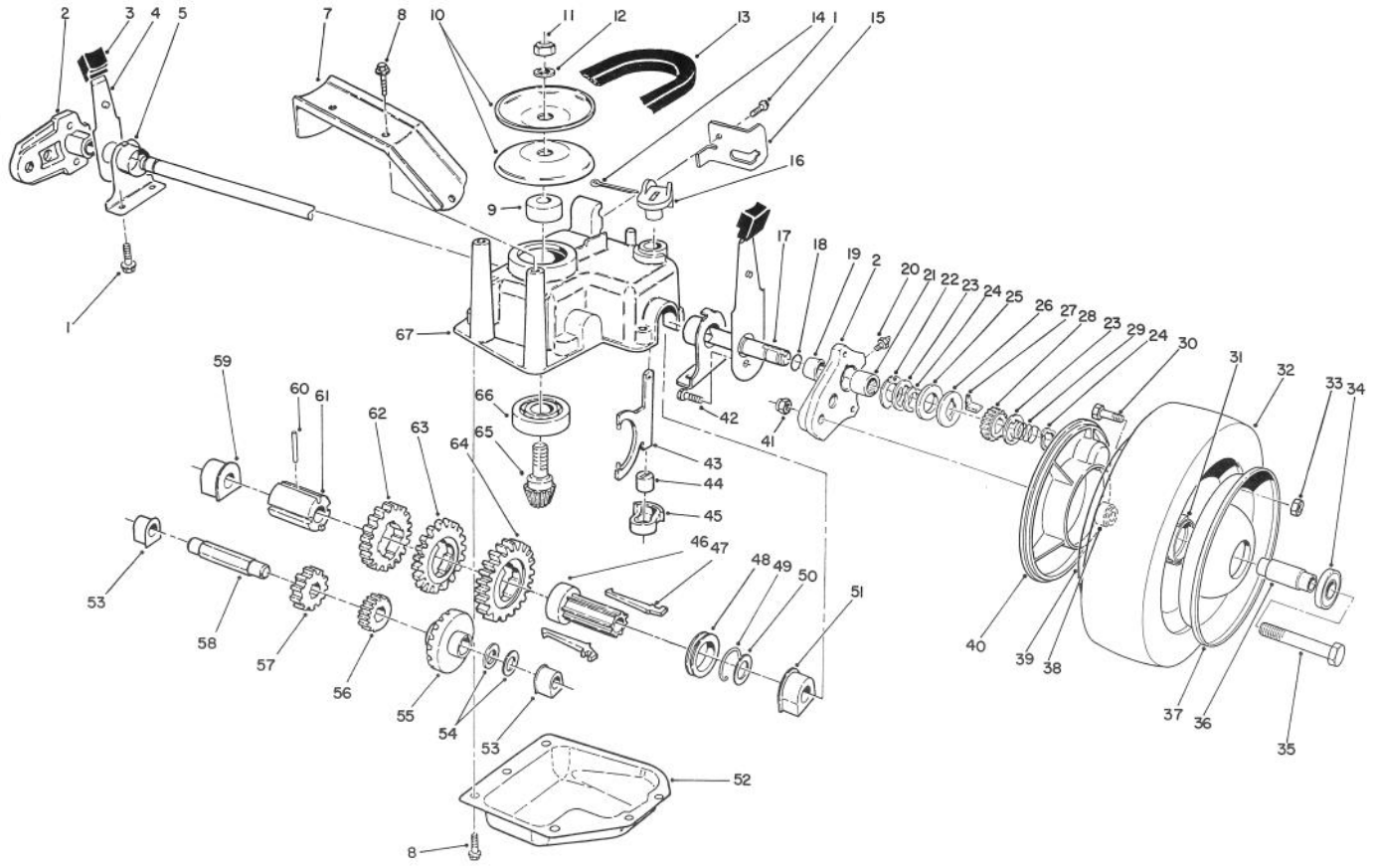

C-0821

GEAR CASE ASSEMBLY

Ref. No.	Part No.	Description	No. Used
1	32144-70	Screw - Hex. Washer Hd.	5
2	65-5042	Pivot Arm Assembly (Incl. Ref. #19-21)	2
3	25-7740	Knob - Arm	2
4	65-5440	Spring Arm Assembly	2
5	66-0360	Cap - End	2
7	65-5190	Bracket - Belt Guide	1
8	49-2040	Screw - Self Tapping	8
9	62-6660	Spacer	1
10	60-8840	Pulley - Half	2
11	3296-5	Nut - Lock	1
12	3256-24	Washer - Flat	1
13	66-0210	V-Belt	1
14	3272-5	Pin - Cotter	1
15	76-2930	Retainer - Cable	1
16	76-0920	Lever - Shift	1
17	65-4770	Shaft - Output	1
18	237-153	O-Ring	2
19	47-2900	Bushing - Sleeve	2
20	302-56	Fitting - Grease	2
21	48-2060	Bearing -Needle	2
22	65-4730	Washer - Thrust (Inner)	2

Ref. No.	Part No.	Description	No. Used
23	65-4740	Washer - Thrust (Keyed)	4
24	65-2720	Ring - Retaining	4
25	65-4710	Ring - Friction	2
26	65-4760	Washer -Clutch	2
27	66-6050	Key - Rocking (L.H.)	1
*	66-6040	Key - Rocking (R.H.)	1
28	65-4750	Pinion	2
29	65-4720	Spring - Compression	2
30	321-2	Screw - Hex.Hd.	8
31	52-2410	Support - Bearing	2
32	53-7740	Tire	2
*	74-1720	Wheel Tire & Gear Assy. (Incl. Ref. #30-34, & 36-40)	2
33	3296-42	Nut - Lock	8
34	52-2450	Bearing	4
35	323-13	Bolt - Wheel	2
36	54-2440	Spacer - Bearing	2
37	53-7780	Plate - Wheel Half	2
38	74-1650	Spacer - Wheel Cover	2
39	53-7750	Wheel Half Assembly	2
40	74-1690	Cover - Wheel	2

*Not Illustrated

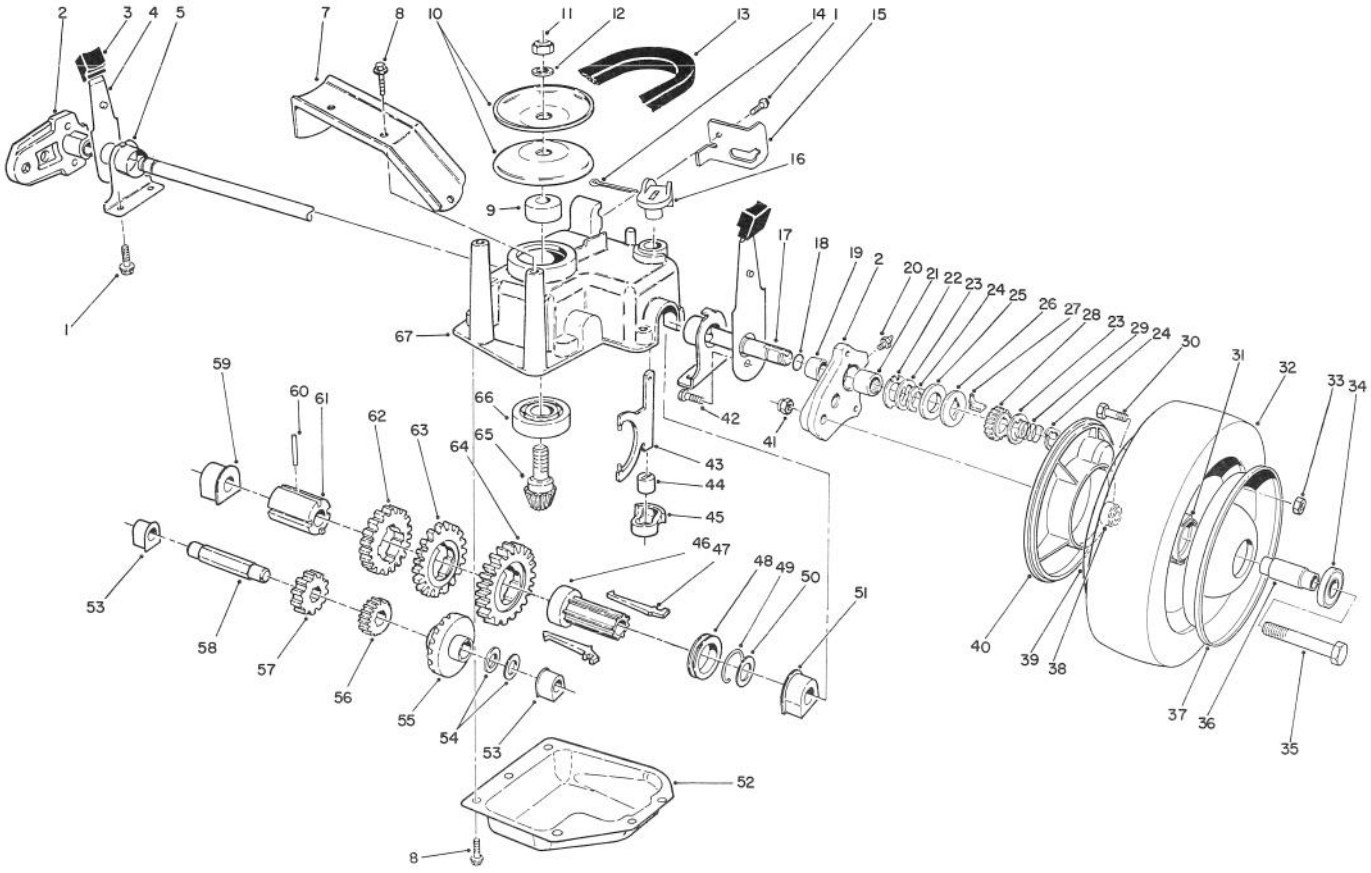

C-0821

GEAR CASE ASSEMBLY (Continued)

Ref. No.	Part No.	Description	No. Used
41	3296-39	Nut - Lock	2
42	65-5220	Screw - Socket Hd.	2
43	60-8870	Yoke - Shift	1
44	29-9570	Bushing - Yoke	1
45	60-8810	Retainer - Shift Fork	1
46	76-0780	Sleeve - Shift Key	1
47	76-0760	Key - Shift	2
48	76-0770	Collar - Shift	1
49	65-5250	Clip - Spring	1
50	36-4780	Washer - Thrust	1
51	60-8770	Bushing - Output Shaft	1
52	60-8730	Cover - Gear Case	1
53	60-8750	Bushing - Intrmdt. Shaft	2
54	36-4791	Washer - Thrust	2

Ref. No.	Part No.	Description	No. Used
55	55-3760	Gear - Pinion 15T	1
56	55-3780	Gear - Pinion 20T	1
57	55-3800	Gear - Pinion 25T	1
58	60-8800	Shaft - Intermediate	1
59	60-8850	Bushing - Output Shaft	1
60	32121-120	Pin - Coil	1
61	60-8790	Sleeve - Gear	1
62	55-3810	Gear - 39T (3rd Gear)	1
63	55-3790	Gear - 44T (2nd Gear)	1
64	55-3770	Gear - 49T (1st Gear)	1
65	60-8890	Pinion - Bevel	1
66	38-7820	Bearing - Ball	1
67	60-8710	Case - Gear (Upper)	1
*	62-6673	Gear Case Assy. Complete	1

*Not Illustrated

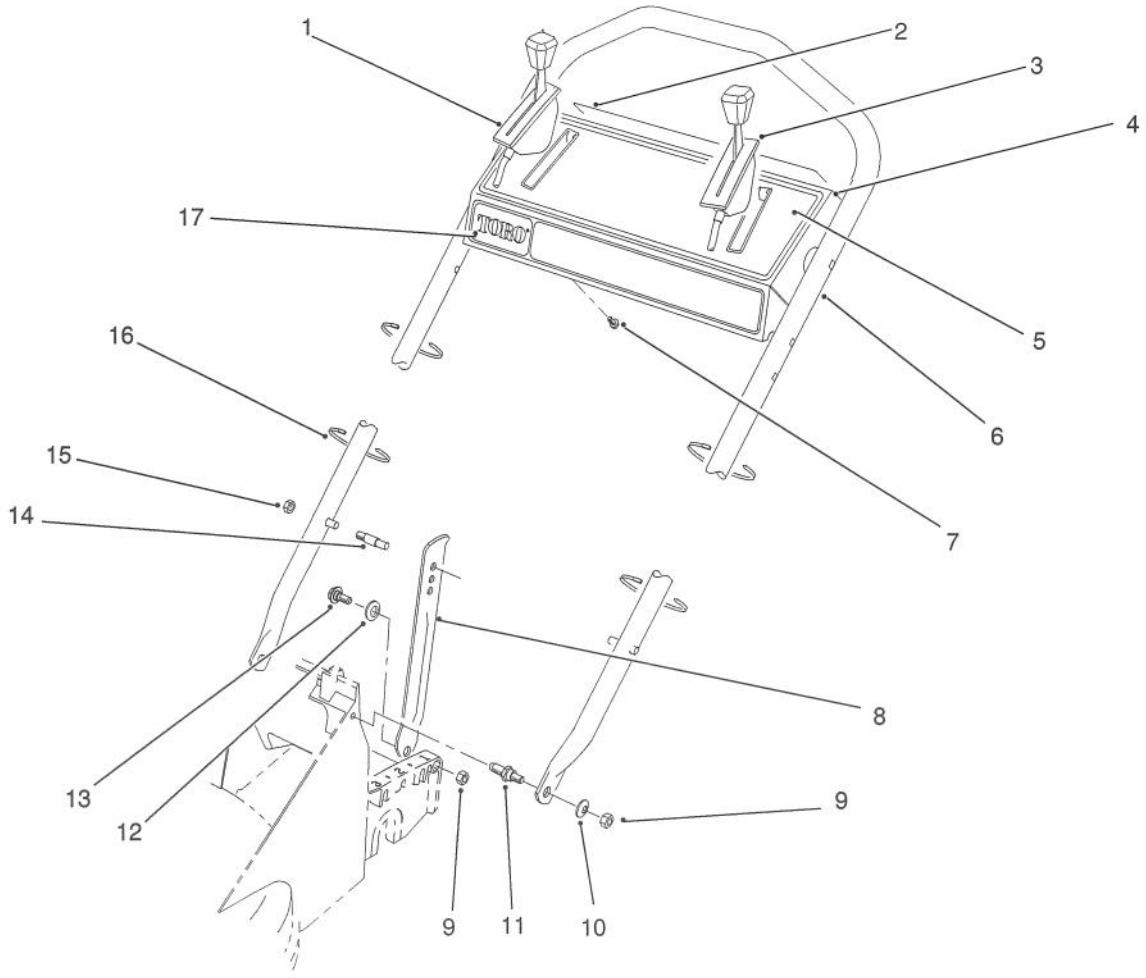

C-0180

HANDLE ASSEMBLY

Ref. No.	Part No.	Description	No. Used
1	76-2710	Control - Ground Speed Bend Type #6 Sheath Lg. 51" (129.5cm) Wire Lg. 3-1/8" (7.9cm)	1
2	66-1790	Decal - Danger	1
3	66-0236	Control - Throttle Bend Type #2 Sheath Lg. 44-3/4" (113.7cm) Wire Lg. 2-1/2" (6.4cm)	1
4	13-6019	Control Panel Assembly (Incl. Ref. #2 & 5)	1
5	66-0290	Decal - Instruction	1
6	66-0320	Handle	1
7	32104-76	Screw - Self Tapping	5
8	65-5730	Latch - Handle	2
9	3296-29	Nut - Lock	4
10	3256-23	Washer - Flat	2
11	66-0450	Screw - Shoulder Stud	2
12	256-313	Washer - Nylon	2
13	5-2490	Screw - Shoulder	2
†14	49-2750	Pin - Handle	2
†15	3296-47	Nut - Lock	2
16	3290-378	Tie - Cable	4
17	66-1770	Decal - TORO	1

*Not Illustrated
†Service Replacement Parts

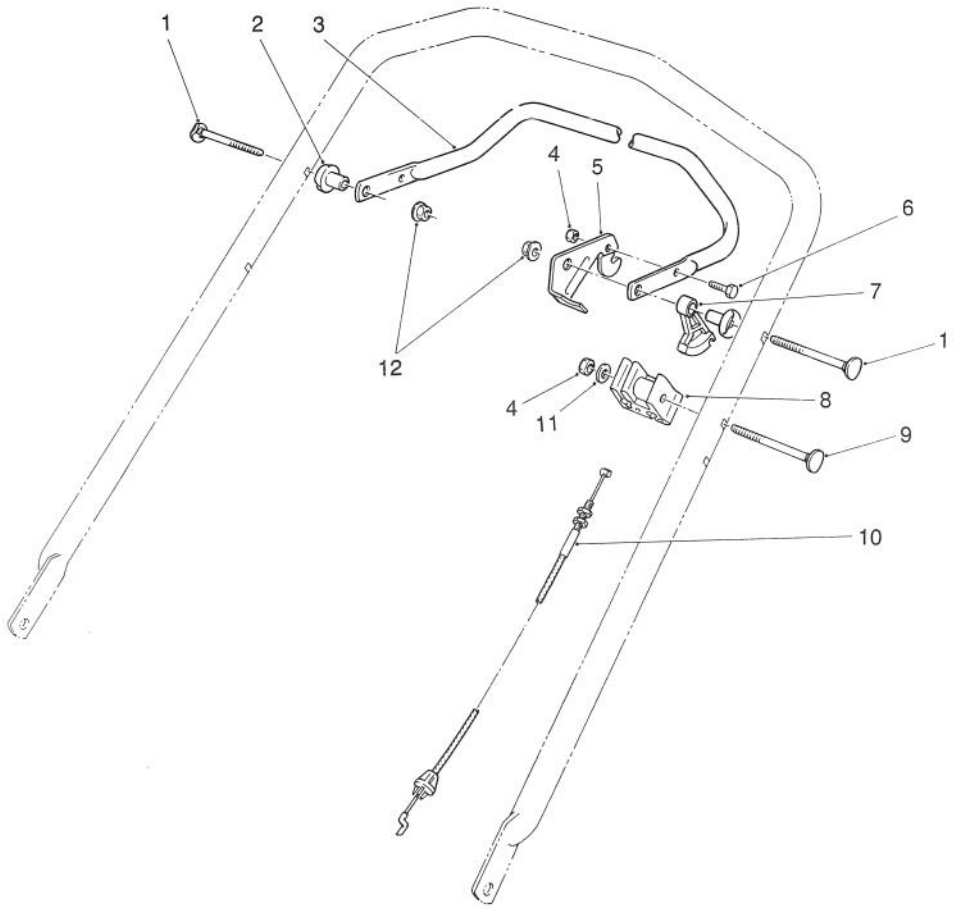

C-0495

TRACTION CONTROL ASSEMBLY

Ref. No.	Part No.	Description	No. Used
1	17-9426	Screw - Handle	2
2	66-0330	Support - Spacer	2
3	52-7430	Control Bar Assembly	1
4	3296-42	Nut - Lock	2
5	46-8800	Lever - Control	1
6	321-3	Screw - Hex. Hd.	1

Ref. No.	Part No.	Description	No. Used
7	46-5520	Lever - Traction	1
8	71-0960	Support - Cable	1
9	46-6432	Screw - Handle	1
10	71-0620	Cable - Traction	1
11	3256-22	Washer - Flat	1
12	3296-58	Nut - Lock	2

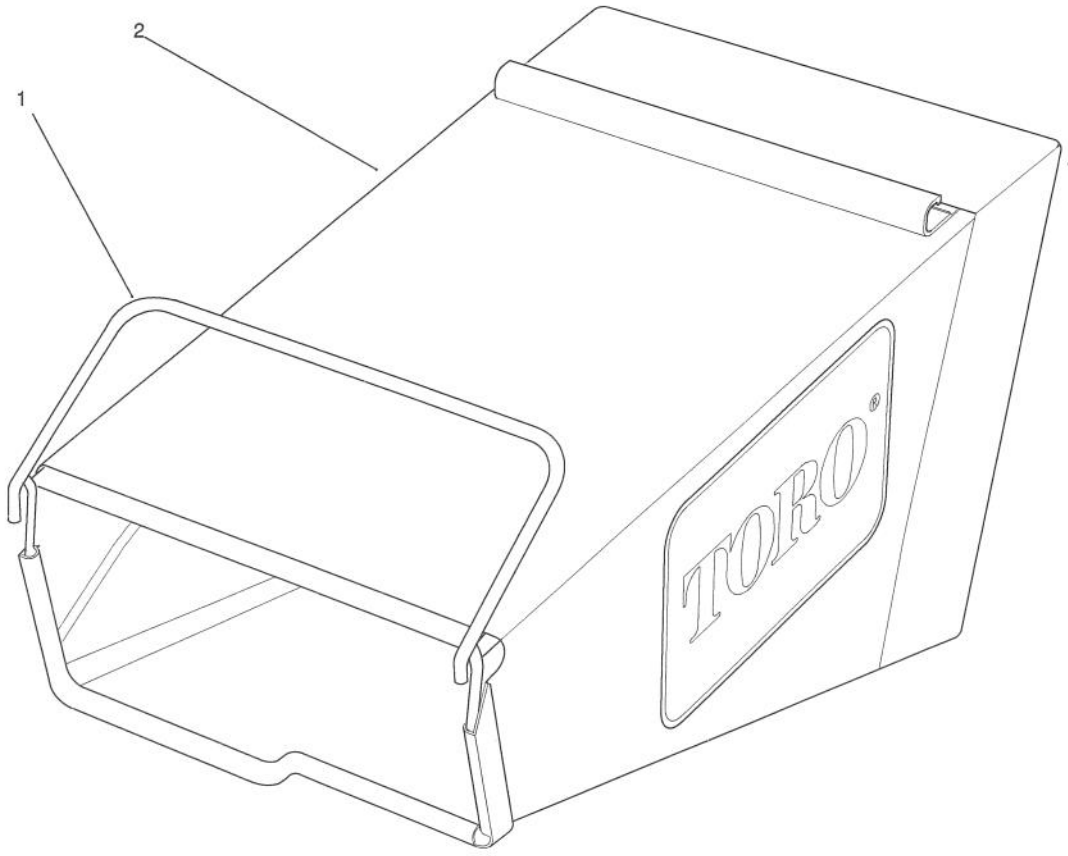

C-0819

GRASS BAG ASSEMBLY

Ref. No.	Part No.	Description	No. Used
1	82-2680	Frame - Grass Bag	1

Ref. No.	Part No.	Description	No. Used
2	83-6490	Bag	1

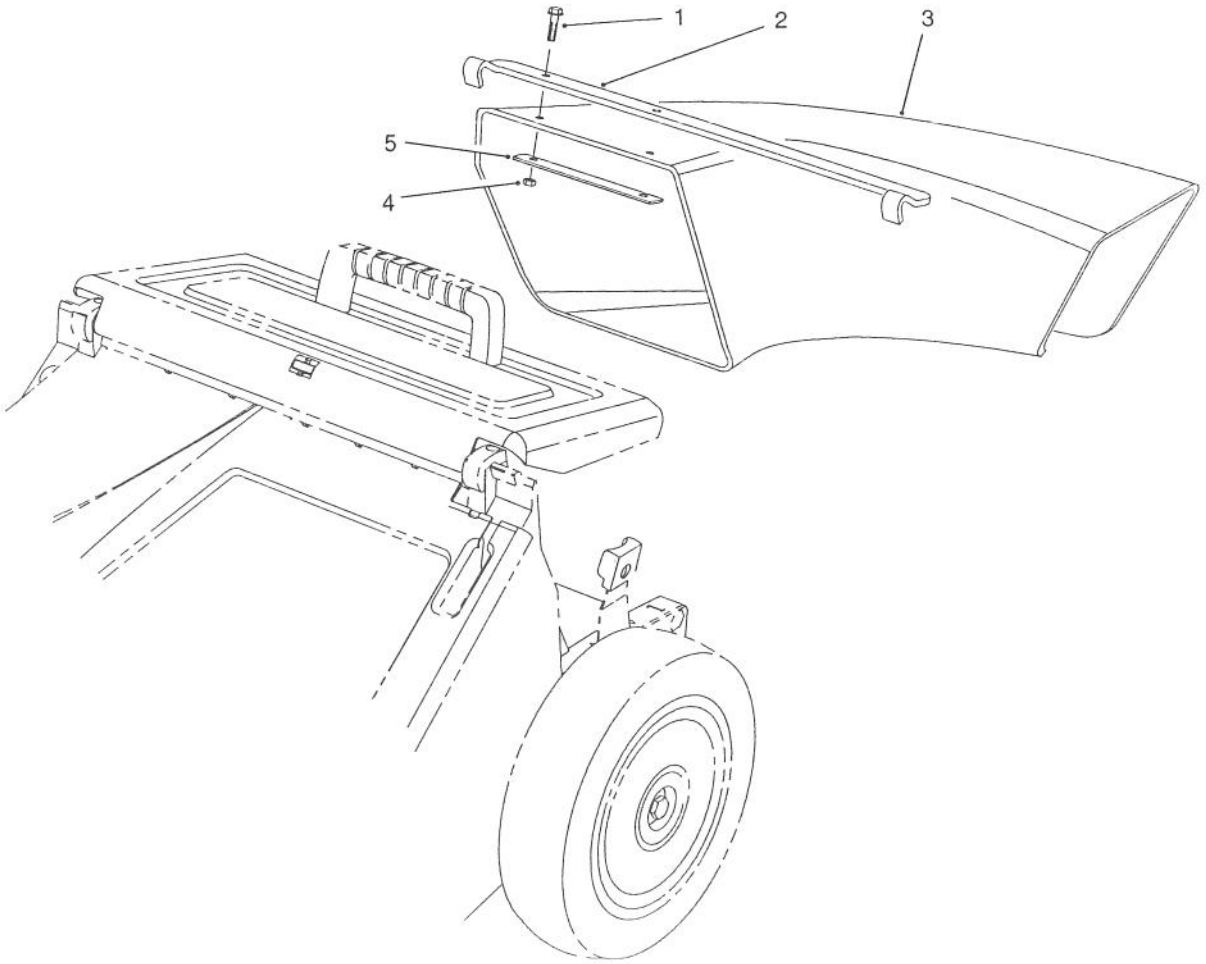

C-0169

SIDE DISCHARGE CHUTE MODEL NO. 59112 (Optional)

Ref. No.	Part No.	Description	No. Used
1	3290-126	Screw - Hex. Washer Hd.	2
2	66-0070	Bracket - Chute Hanger	1
3	65-5240	Chute - Discharge	1

Ref. No.	Part No.	Description	No. Used
4	3296-12	Nut - Lock	2
5	66-0060	Plate - Stress	1

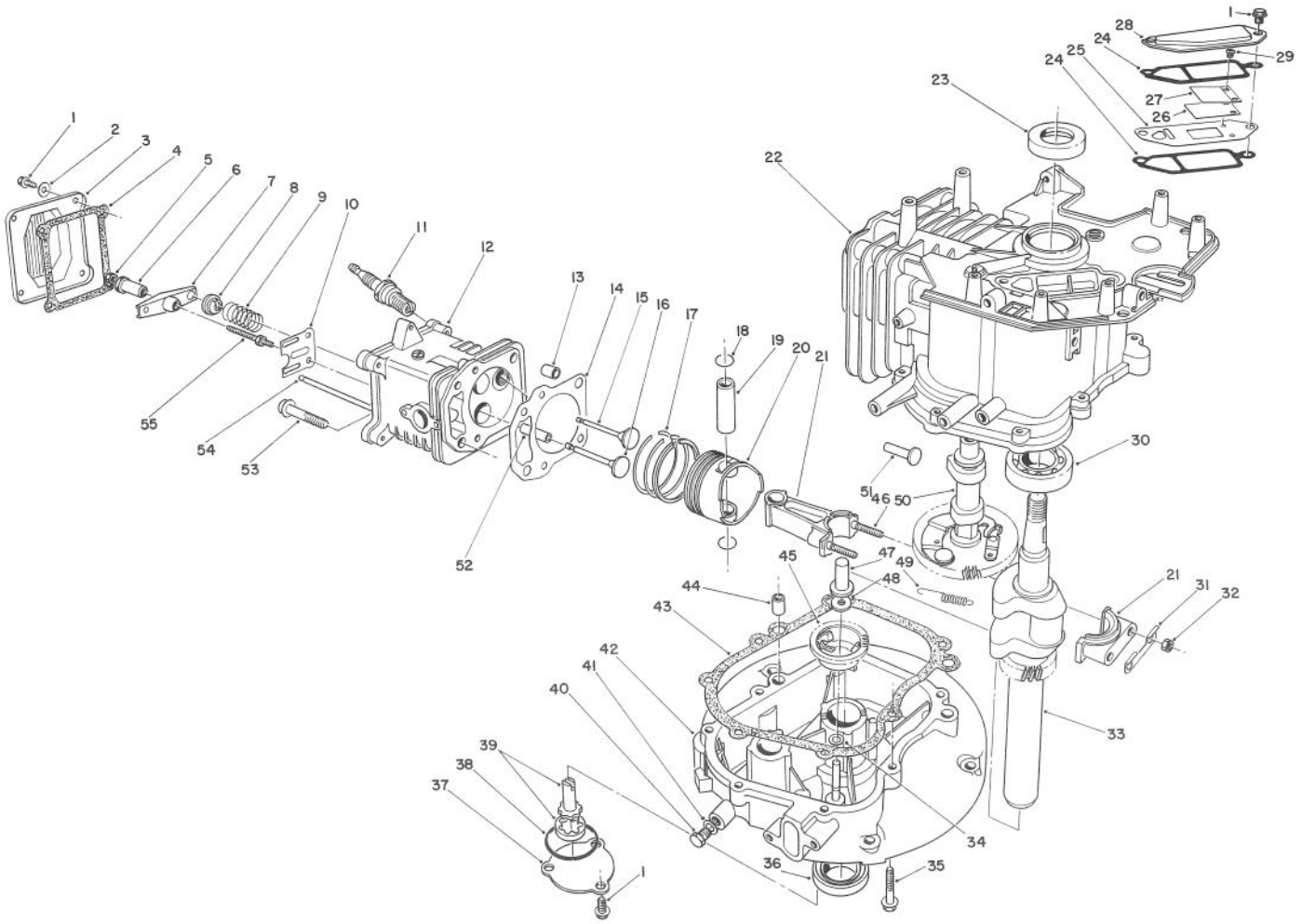

C-0174

CRANKCASE ASSEMBLY (Engine No. VML0-7)

Ref. No.	Part No.	Description	No. Used
1	81-1170	Bolt	9
2	81-3790	Washer	4
3	81-3780	Cover - Rocker Arm	1
4	81-3770	Gasket - Cover	1
5	81-3760	Nut - Jam	2
6	81-3750	Pivot - Rocker Arm	2
7	81-3740	Arm - Rocker	2
8	81-3730	Retainer - Valve Spring	2
9	81-3720	Spring - Valve	2
10	81-3710	Guide - Push Rod	1
11	81-3250	Plug - Spark	1
12	81-5540	Head - Cylinder (Incl. Ref. #52)	1
*	81-5730	Cylinder Head Assembly (Incl. Ref. #1-10, 12 & 52-55)	1
13	81-3690	Pin - Dowel	2
14	81-4710	Gasket - Cylinder Head	1
*	81-3820	Set - Gasket	1
15	81-3660	Valve - Exhaust	1

Ref. No.	Part No.	Description	No. Used
16	81-3670	Valve - Intake	1
17	81-3650	Piston Ring Set	1
18	50-0960	Circlip	2
19	81-3630	Pin - Piston	1
20	81-3620	Piston	1
21	81-3390	Connecting Rod Assembly (Incl. Ref. #31, 32 & 46)	1
22	81-3280	Block - Engine (Incl. Ref. #23 & 30)	1
23	81-3290	Seal - Upper Crankshaft	1
24	81-3300	Gasket - Breather	2
25		Plate - Breather	1
26		Valve - Reed	1
*	81-3370	Reed Valve Assembly (Incl. Ref. # 25 & 27-29)	1
27		Retainer - Reed Valve	1
28	81-3320	Cover - Breather	1
29		Screw - Reed Valve	2
30	81-3380	Bearing - Ball	1
31	81-3400	Plate - Lock	1

*Not Illustrated

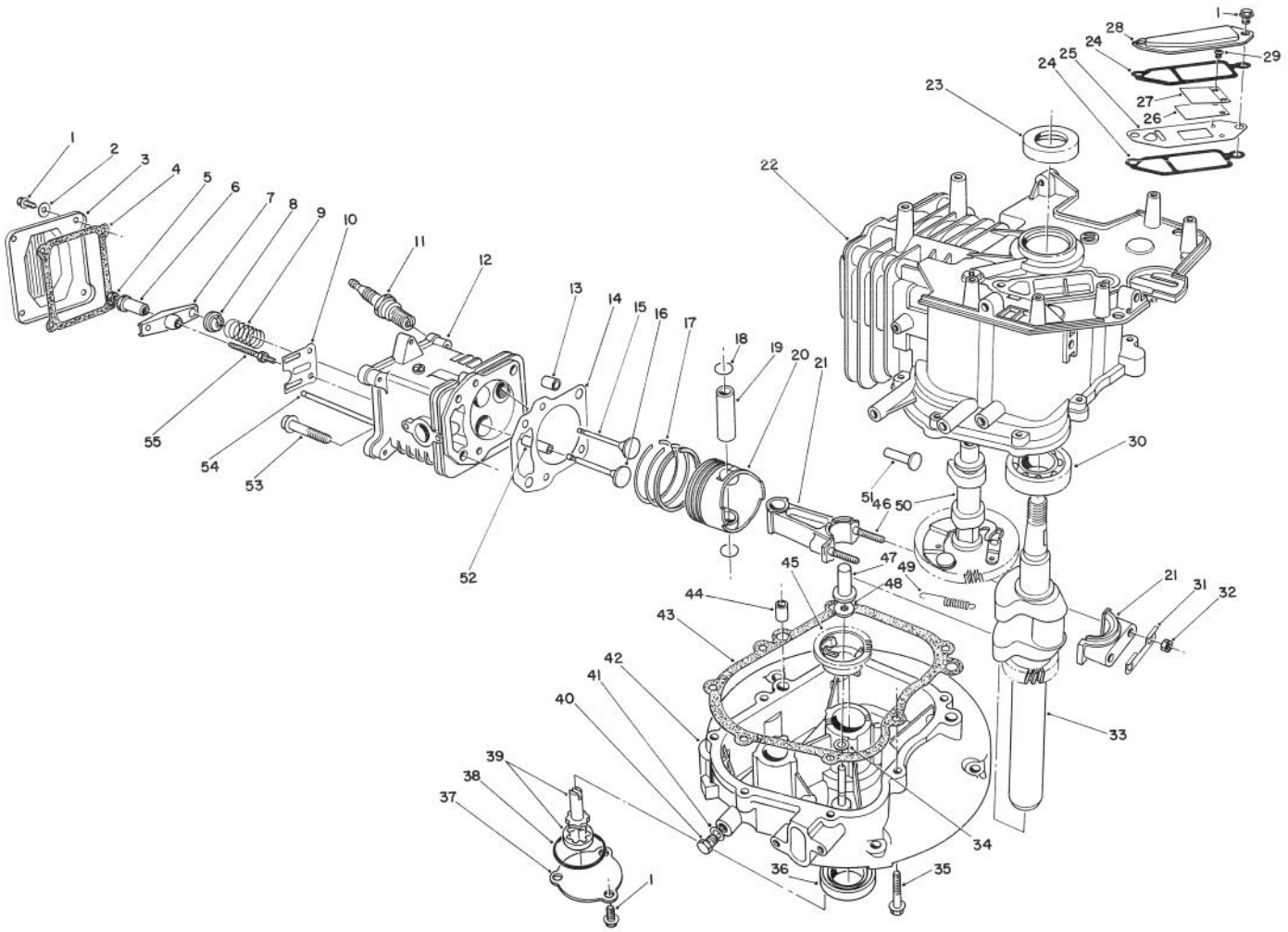

C–0174

CRANKCASE ASSEMBLY (Continued)
(Engine No. VML0–7)

Ref. No.	Part No.	Description	No. Used
32	50–0510	Nut	2
33	81–3420	Crankshaft	1
34	81–3440	Washer	1
35	81–3450	Bolt	7
36	81–3460	Seal – Lower Crankshaft	1
37	81–3470	Cover – Oil Pump	1
38	81–3480	Seal – O–Ring	1
39	81–3490	Oil Pump Assembly	1
40	81–4970	Plug – Oil Drain	1
41	81–3510	Gasket – Oil Plug	1
42	81–3520	Crankcase – Lower	1
43	81–3530	Gasket – Crankcase	1
44	50–0450	Pin – Dowel	2

Ref. No.	Part No.	Description	No. Used
45	81–3550	Governor Flyweight Assy.	1
46	81–3610	Stud – Connecting Rod	2
47	81–3560	Plunger – Governor	1
48	81–3570	Washer	1
49	81–3580	Spring – Comp. Release	1
50	81–5550	Camshaft Assembly (Incl. Ref. #49)	1
51	81–3600	Tappet	2
52	81–3830	Guide – Valve	2
53	50–0190	Bolt	4
54	81–3810	Rod – Push	2
55	81–3800	Stud – Rocker Arm	2
*	13–5929	Short Block Assembly	1

*Not Illustrated

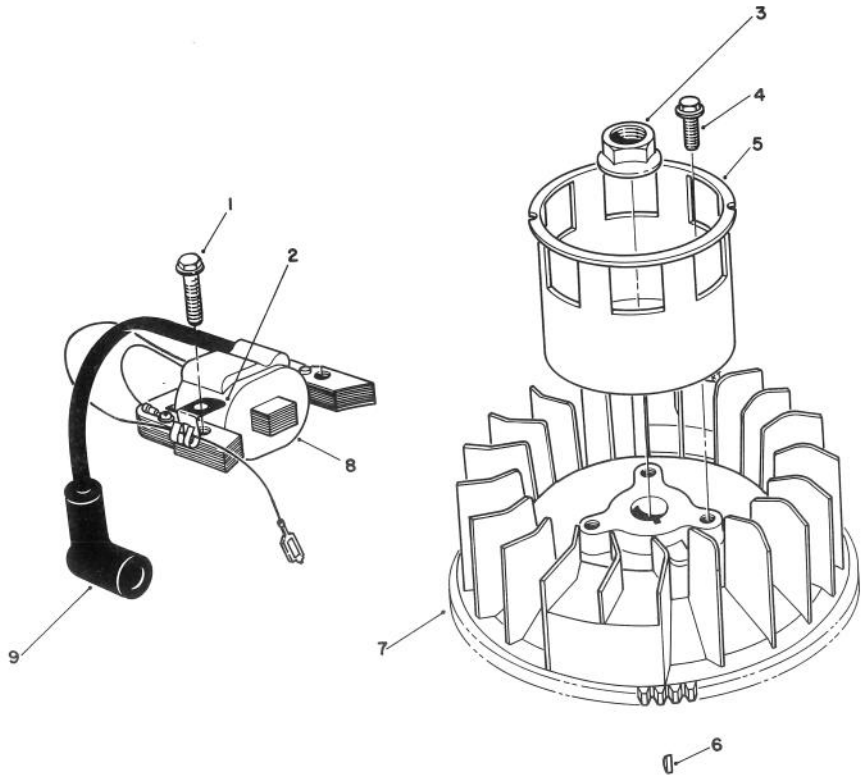

T-0723

MAGNETO & FLYWHEEL ASSEMBLY (Engine No. VML0–7)

Ref. No.	Part No.	Description	No. Used
1	53–0860	Bolt	2
2	81–1480	Clamp	1
3	81–3890	Nut	1
4	81–1300	Bolt	3
5	81–3910	Cup – Starter	1

Ref. No.	Part No.	Description	No. Used
6	81–3930	Key – Flywheel	1
7	81–3920	Flywheel	1
8	81–5580	Magneto Coil Assembly	1
9	81–3860	Cover – Spark Plug	1

*Not Illustrated

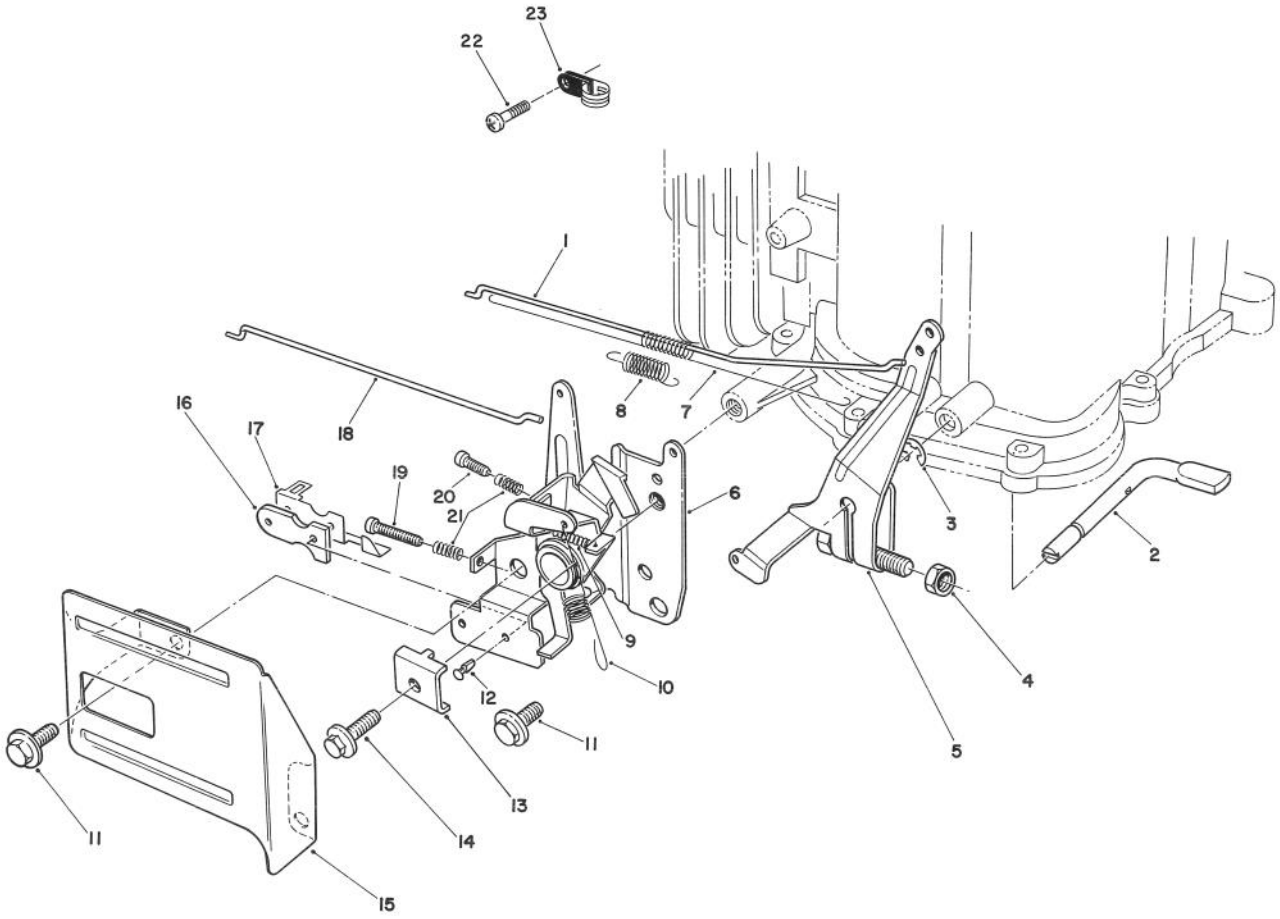

C-0159

GOVERNOR ASSEMBLY
(Engine No. VML0-7)

Ref. No.	Part No.	Description	No. Used
1	81-4450	Rod - Carburetor	1
2	81-4480	Shaft - Governor	1
3	81-4540	Ring - Retaining	1
4	81-4490	Nut	1
5	81-4500	Governor Arm Assembly	1
6	81-4510	Throttle & Choke Control	1
7	81-4470	Spring - Carburetor Rod	1
8	81-4460	Spring - Choke Lever	1
9	81-4570	Spring	1
10	81-4520	Spring - Governor	1
11	81-1170	Bolt	2
12	81-4530	Rivet	2

Ref. No.	Part No.	Description	No. Used
13	81-1690	Clamp - Cable	1
14	50-0130	Bolt	1
15	57-5750	Guard - Throttle	1
16	81-1830	Insulator - Kill Switch	1
17	81-1840	Terminal - Switch	1
18	81-4440	Rod - Choke	1
19	81-4560	Screw	1
20	81-4550	Screw	1
21	81-2900	Spring	2
22	81-0380	Screw	1
23	81-4780	Clamp	1

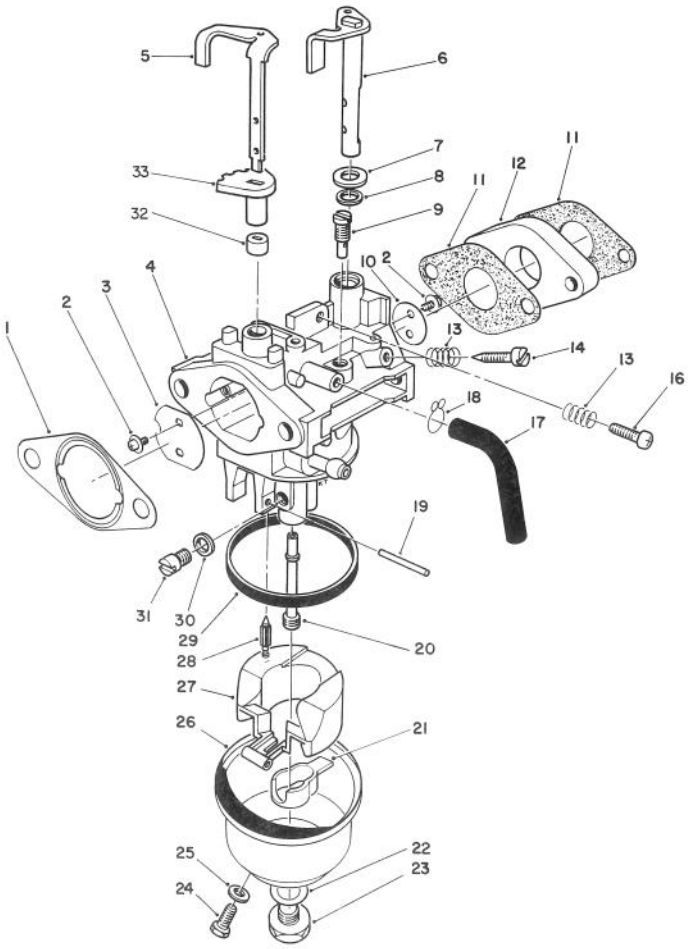

C-0160

CARBURETOR ASSEMBLY (Engine No. VML0-7)

Ref. No.	Part No.	Description	No. Used
1	81-4250	Gasket - Air Cleaner	1
2	81-2710	Screw - Choke Valve	4
3	81-2720	Valve - Choke	1
4		Body - Carburetor	1
5	81-5510	Shaft - Choke Control	1
6	81-2920	Shaft - Throttle Valve	1
7	81-4280	Washer	1
8	81-4290	Seal - Throttle Shaft	1
9	81-5620	Jet - Pilot (#38.8)	1
10	81-2940	Valve - Throttle	1
11	81-5560	Gasket - Carburetor	2
12	81-5570	Block - Insulator	1
13	81-2580	Spring - Pilot Screw	2
14	50-2360	Screw - Pilot	1
16	50-0250	Screw - Idle Stop	1
17	81-4310	Tube - Bowl Vent	1
18	81-4300	Clamp	1
19	81-5600	Pin - Hinge	1
20	81-5630	Nozzle - Main	1

Ref. No.	Part No.	Description	No. Used
21	81-4940	Spacer - Float	1
22	81-2650	Gasket - Bowl Screw	1
23	81-2660	Screw - Bowl	1
24	81-2670	Screw - Drain	1
25	81-2680	Gasket - Drain Screw	1
26	81-4340	Bowl - Float	1
27	81-4920	Float	1
28	81-4700	Needle	1
29	81-2630	Gasket - Float Bowl	1
30	81-4350	Spacer	1
31	50-5610	Jet - Main (#70)	1
*	81-5640	Jet - Main (#77.5 High Alt)	1
32	81-5530	Ring - Choke (Lower)	1
33	81-5520	Ring - Choke (Upper)	1
*	81-4270	Choke Shaft Assembly (Incl. Ref. #5, & 32-33)	1
*	81-5590	Carburetor Assembly (Incl. Ref. #2-33)	1
*	81-5820	Kit -Needle Valve & Seat	1

*Not Illustrated

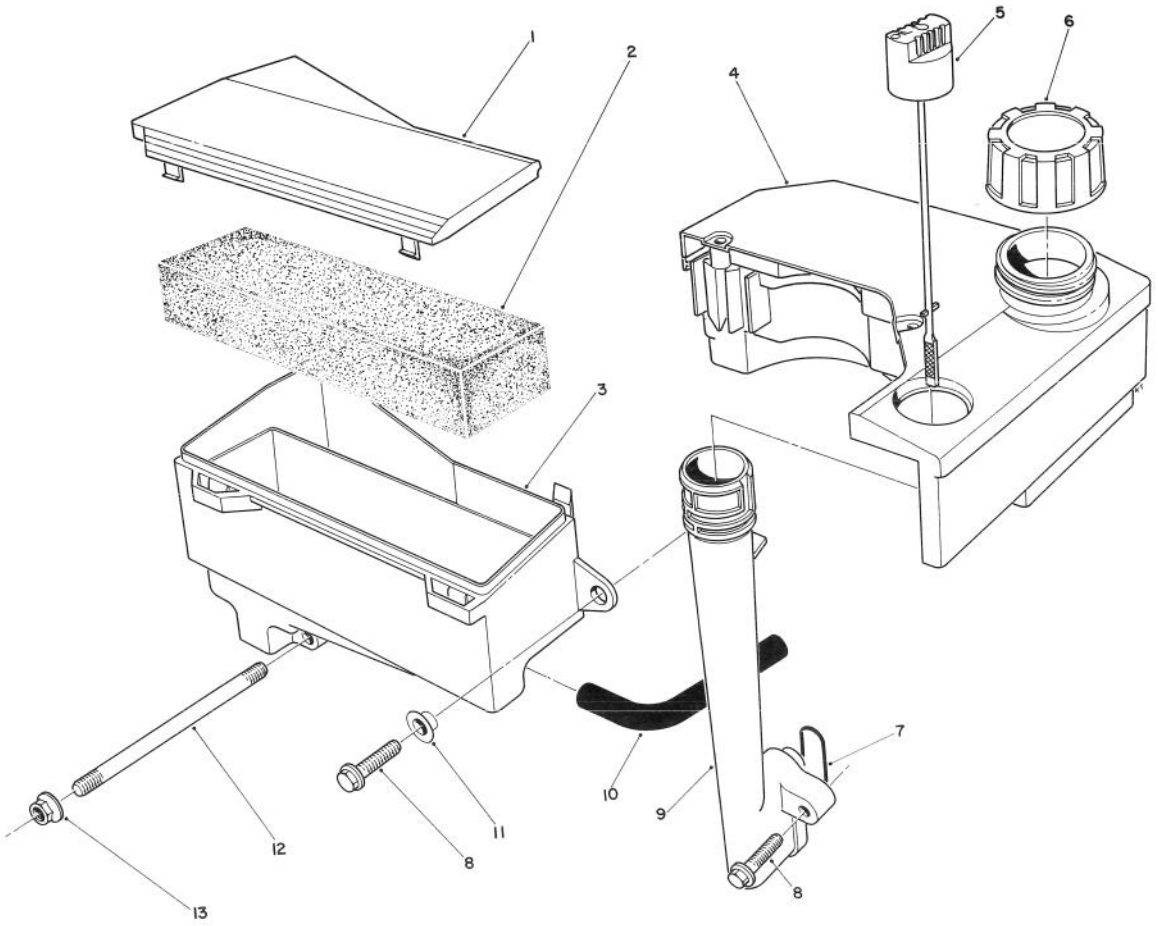

C-0161

AIR CLEANER & FUEL TANK ASSEMBLY (Engine No. VML0–7)

Ref. No.	Part No.	Description	No. Used
1	81–4110	Cover – Air Cleaner	1
2	81–4120	Filter – Foam	1
3		Body – Air Cleaner	1
4	55–3530	Tank – Fuel	1
5	81–4140	Dipstick – Oil	1
6	55–3570	Cap – Gas	1
7	81–4150	Seal – Oil Tube	1
8	81–4160	Bolt	3

Ref. No.	Part No.	Description	No. Used
9	81–4170	Tube – Oil Fill	1
10	81–4180	Hose – Crankcase Breather	1
11	81–4200	Spacer	1
12	81–4220	Stud – Carburetor	2
13	50–7180	Nut	2
*	81–4240	Air Cleaner Assembly (Incl. Ref. #1 & 3)	1

*Not Illustrated

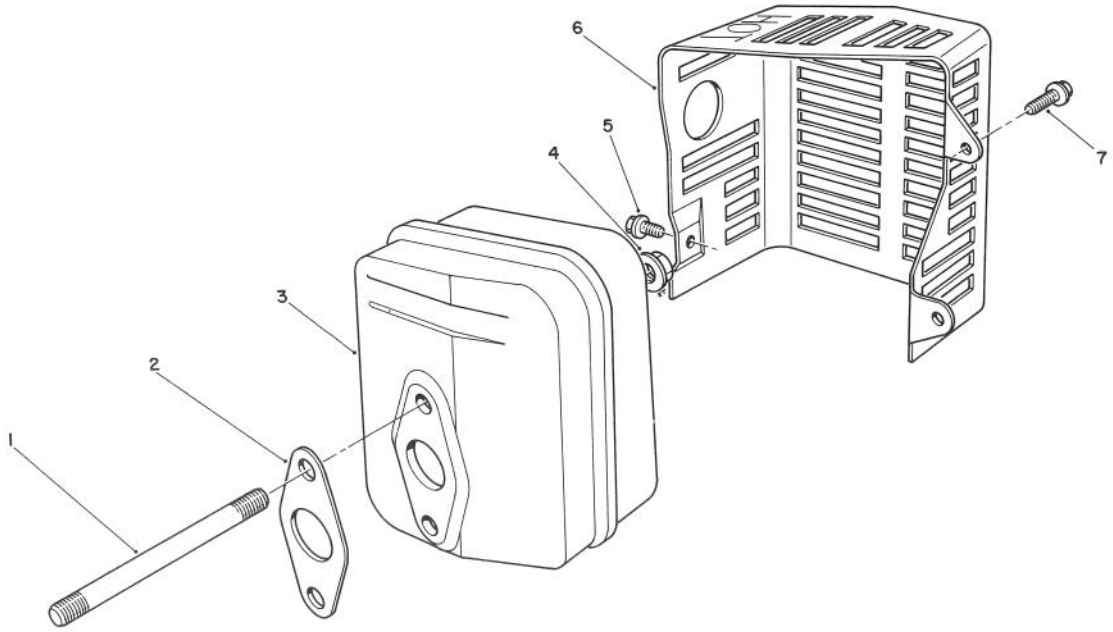

T-0726

MUFFLER ASSEMBLY
(Engine No. VML0-7)

Ref. No.	Part No.	Description	No. Used
1	81-4380	Stud - Muffler	2
2	81-4390	Gasket - Muffler	1
3	81-4400	Muffler	1
4	50-0530	Nut	2
5	81-4420	Screw	1

Ref. No.	Part No.	Description	No. Used
6	81-4430	Cover - Muffler	1
7	81-1170	Bolt	2
*	56-6730	Spark Arrester Kit (Incl. Ref. #2) Optional	1

*Not Illustrated

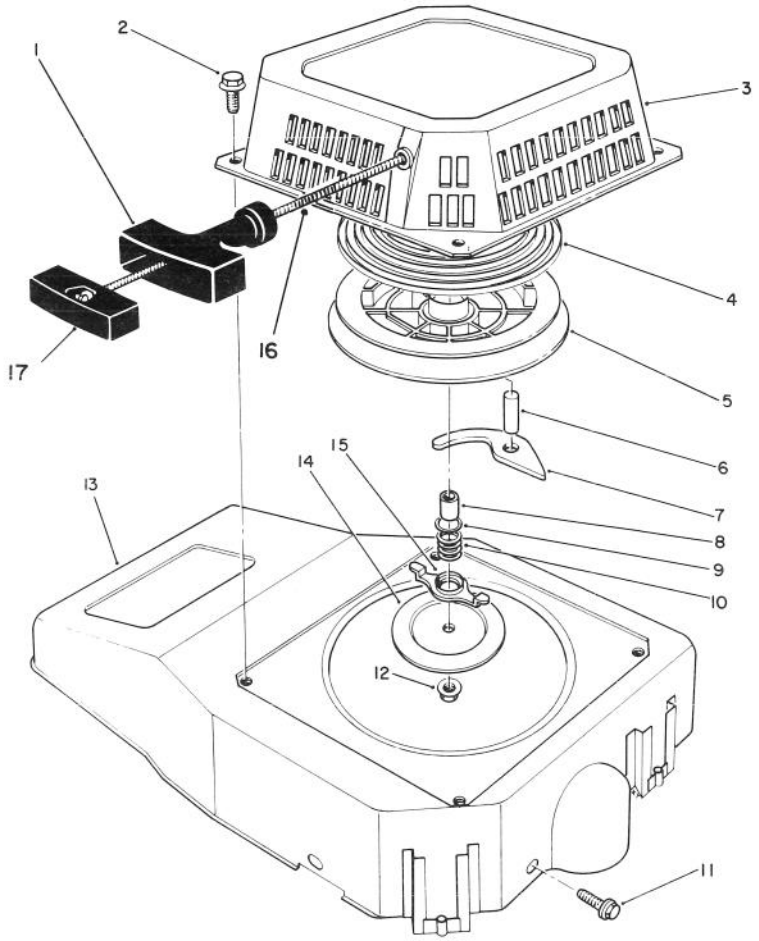

C-0162

RECOIL ASSEMBLY
(Engine No. VML0-7)

Ref. No.	Part No.	Description	No. Used
1	81-4000	Handle	1
2	81-1280	Bolt	4
3	81-3970	Case - Recoil	1
4	81-4010	Spring - Recoil	1
5	81-4020	Reel - Rope Pulley	1
6	81-4030	Pin	1
7	81-4040	Pawl	1
8	81-4050	Spacer	1
9	81-4060	Washer	1
10	81-4070	Spring - Friction	1
11	81-1170	Bolt	3

Ref. No.	Part No.	Description	No. Used
12	81-4100	Nut - Lock	1
13	81-3960	Shroud - Blower	1
14	81-4090	Plate - Friction	1
15	81-4080	Guide - Pawl	1
16	81-1270	Rope - Recoil	1
17	81-4960	Retainer - Rope	1
*	81-3990	Rope & Handle Assembly (Incl. Ref. #1, 15 & 17)	1
*	81-3270	Recoil Starter Assembly (Incl. Ref. #1, 3-10, 12-15 & 17)	1

*Not Illustrated

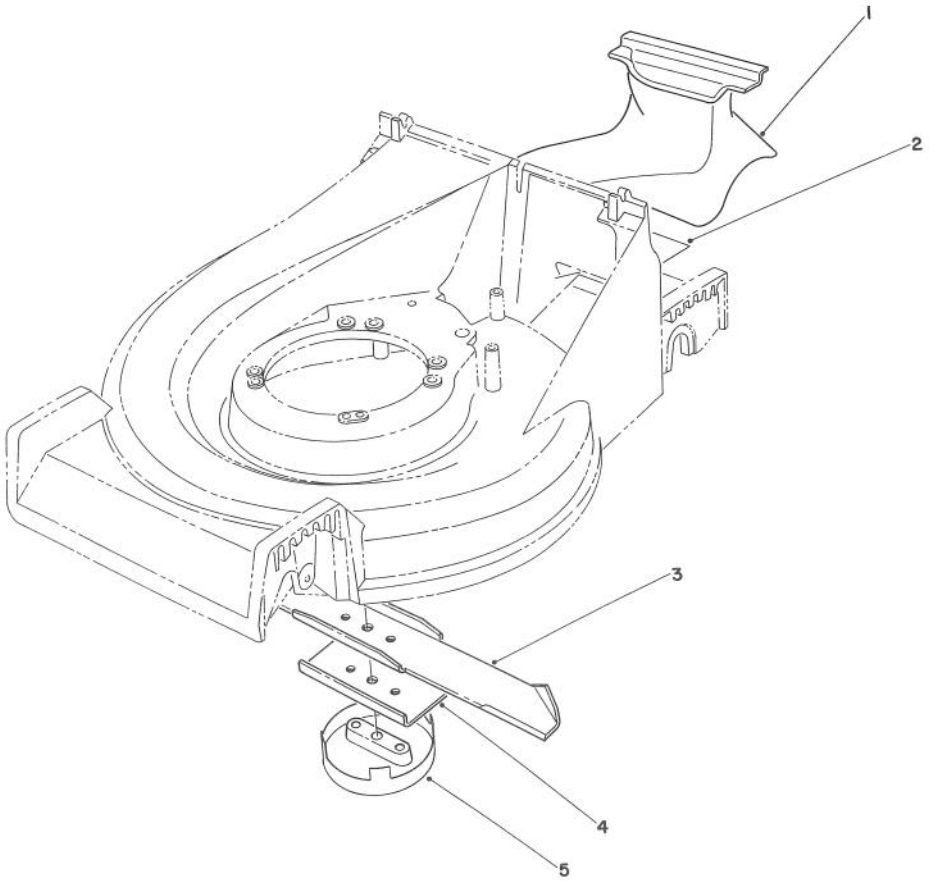

C-0658

MULCHING KIT MODEL NO. 59172

Ref. No.	Part No.	Description	No. Used
1	71-9090	Plug - Mulching	1
2	71-9210	Decal Mulching	1
3	42-1000	Blade	1

Ref. No.	Part No.	Description	No. Used
4	80-0510	Stiffener	1
5	80-2770	Cup - Anti Scalp	1

*Not Illustrated

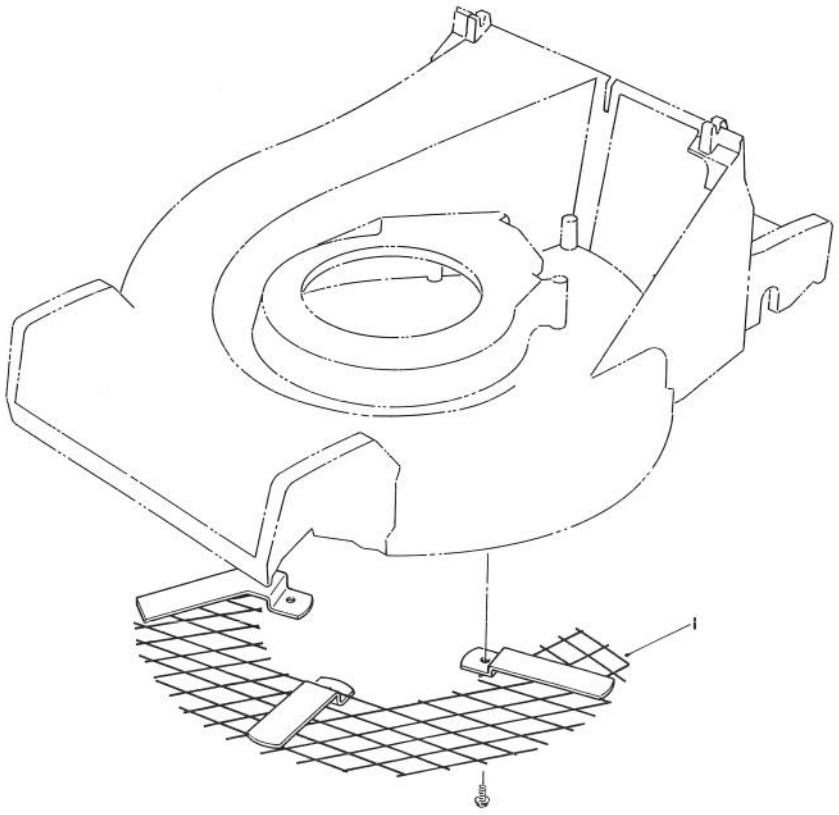

C-0542

LEAF SHREDDER KIT MODEL NO. 59181

Ref. No.	Part No.	Description	No. Used
1	77-0390	Shredder - Leaf	1

Ref. No.	Part No.	Description	No. Used

*Not Illustrated

AL-911251

Litho U.S.A.