Mulch Kit for 54-inch Tractor Decks

Models 77225 & 190-841-190

Operator s Manual

NOTE: *Model 841 Mulch Kit is designed for use on tractors equipped with 54-inch cutting deck only.This will NOT mount, nor operate safely or properly on any other tractor regardless of the tractor s compatibility with similar accessories.*

WARNING: Restrict the use of this accessory and the tractor to persons who read, understand and follow the warnings and instructions in this manual, the tractor manual and on the machine.

Customer Support

1. Visit **mtdproducts.com** for many useful suggestions; click on Customer Support button to access database.
2. If you prefer to reach the Customer Service Line, please call **1(800) 800-7310**.

Locating Model Number

Before you install this kit, please locate the model plate on the mulch plug and note the model and serial numbers. This information will be necessary to use the manufacturer s web site and/or seek help from Customer Support Department or White Outdoor dealer.

Before Assembly

WARNING: Cutting blades are sharp. Always protect hands by wearing heavy leather work gloves or use heavy rags to handle blades.

- Before beginning installation, place the tractor on a firm and level surface.
- Place the PTO in the disengaged (OFF) position, stop the tractor engine and set the parking brake.
- Make sure the kit contains a mulch plug (part # 731-04651) and three mulching blades (part # 742-0678).

Installing Mulching Blades

- Remove the cutting deck from beneath the tractor following instructions on DECK REMOVAL in the MAINTENANCE section of your tractor s Operator s Manual.
- Gently flip the deck over to expose its underside.
- Place a block of wood between the center deck housing baffle and the cutting blade to act as a stabilizer. See Figure 1.
- Use a 15/16" wrench to remove the hex flange nut that secures the blade to the spindle assembly. Save the hardware.

NOTE: *The hex flange nut has a right-handed thread pattern. Do not attempt to force the nut in the wrong direction. Doing so may damage the nut and create a safety hazard.*

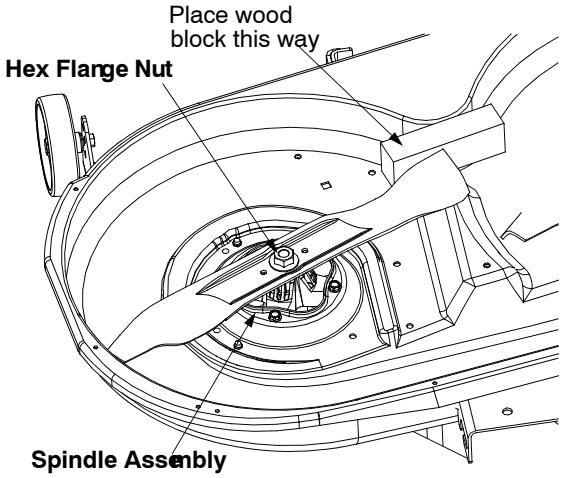

Figure 1

PRINTED IN U.S.A.

FORM NO. 770-10591A
(3/2004)

- Install one of the three new blades included in the mulch kit on the spindle assembly. Be sure to install the blade with the side of the blade marked ‘‘Bottom’’ (or with a part number stamped in it) facing the ground when the mower is in the operating position.
- Secure with the hex flange nut removed earlier.
- Use a torque wrench to tighten the blade spindle hex flange nut to between **70 to 90 foot-pounds**.
- Repeat with the other two blades. Then flip the deck back to its operating position.
- Remount the cutting deck following instructions in the owner/operator’s manual of the tractor.

Installing Mulch Plug

- Locate two rectangular holes on the cutting deck surface.
- Pivot the discharge chute up to access the deck opening. See Figure 2.
- Insert the mulch plug in the deck opening, aligning the top edge of the plug with the deck. Make sure the notches on the plug are in the slots on the deck opening. See Figure 2.
- Lightly tab on the plug with your hand so that the notches fit properly under the chute tabs and the plug is secure.

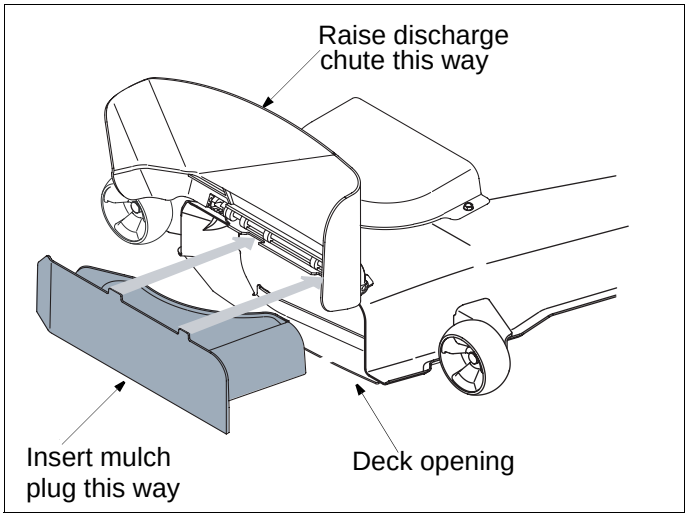

Figure 2

Mulching

The mulch plug allows the tractor to recirculate grass clippings into the lawn where they act as a natural fertilizer.

Observe following points for best results in mulching:

- Never attempt to mulch if the lawn is damp. Wet grass tends to stick to the underside of the deck preventing proper mulching.
- Do not attempt to mulch more than 1/3 the total height of the grass or approximately 1-1/2 inches. Maintain a slow ground speed to allow the grass clippings more time to be mulched effectively.
- Always position the throttle control lever of the tractor in the FAST (rabbit) position while mulching.

WARNING: Do **not** under any circumstances attempt to mow through grass which exceeds 10 inches in height. Debris may build up on the mowing deck and come into contact with belts and other moving parts or the engine’s exhaust system presenting a potential fire hazard.