FORM NO. 3314–632 REV. A

TORO®

MODEL NO. 16403–1000001–2000001 & UP

PARTS CATALOG

21" SIDE DISCHARGE MOWER

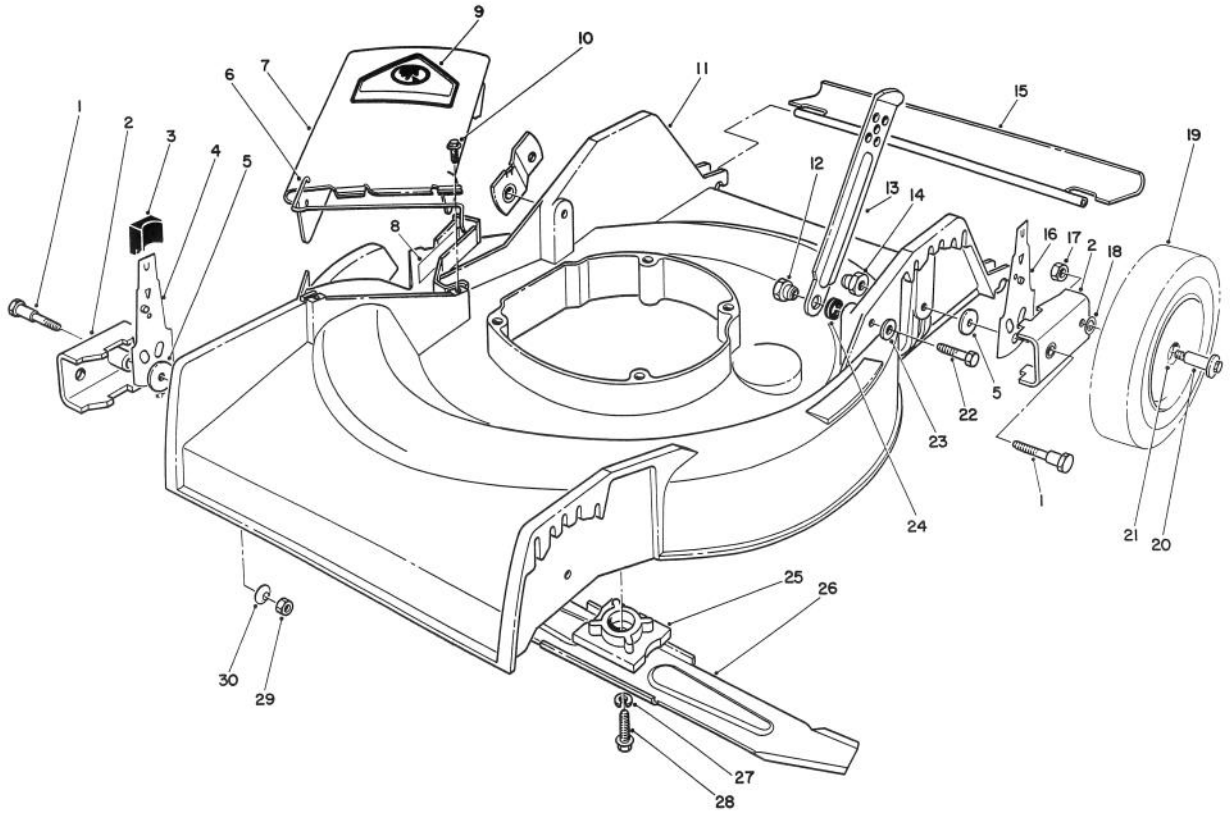

C–0799

HOUSING ASSEMBLY

Ref. No.	Part No.	Description	No. Used
1	44–5271	Screw – Pivot	4
2	47–2940	Pivot Arm Ass'y	4
3	25–7740	Knob – Spring Arm	4
4	66–9270	Spring Arm Front – R.H.	1
*	66–9280	Spring Arm – Front L.H.	1
5	33–0390	Washer – Pivot	4
6	20–2640	Hinge – Spring	1
7	13–3429	Deflector (Incl. Ref. #6 & 9)	1
8	62–4200	Decal – Danger	1
9	56–6270	Decal – Danger	1
10	46–6811	Screw & Washer Assembly	2
11	13–2439	Housing Assembly (Incl. Ref. #8)	1
12	27–6520	Nut – Shoulder	2
13	82–7620	Latch – Handle	2
14	12–2080	Nut – Shoulder	2
15	66–5990	Shield – Rear	1

Ref. No.	Part No.	Description	No. Used
16	66–9260	Spring Arm – Rear L.H.	1
*	66–9250	Spring Arm – Rear R.H.	1
17	52–3620	Locknut	4
18	40–1940	Washer – Wheel Bolt	4
19	11–9509	Wheel & Tire Assembly (Incl. Ref. #21)	4
20	27–6230	Bolt – Wheel	4
21	27–6250	Bushing – Wheel	8
22	322–7	Screw – Hex Hd. Cap	2
23	3253–4	Washer – Lock	2
24	3–3287	Spacer – Handle Latch	2
25	49–7900	Retainer – Blade	1
26	20–2720	Blade	1
27	3253–22	Lockwasher	1
28	26–0671	Screw – Blade	1
29	3296–29	Locknut	2
30	3290–456	Washer – Belleville	2

*Not Illustrated

© The TORO Company –1991 REV. 1992

TPS

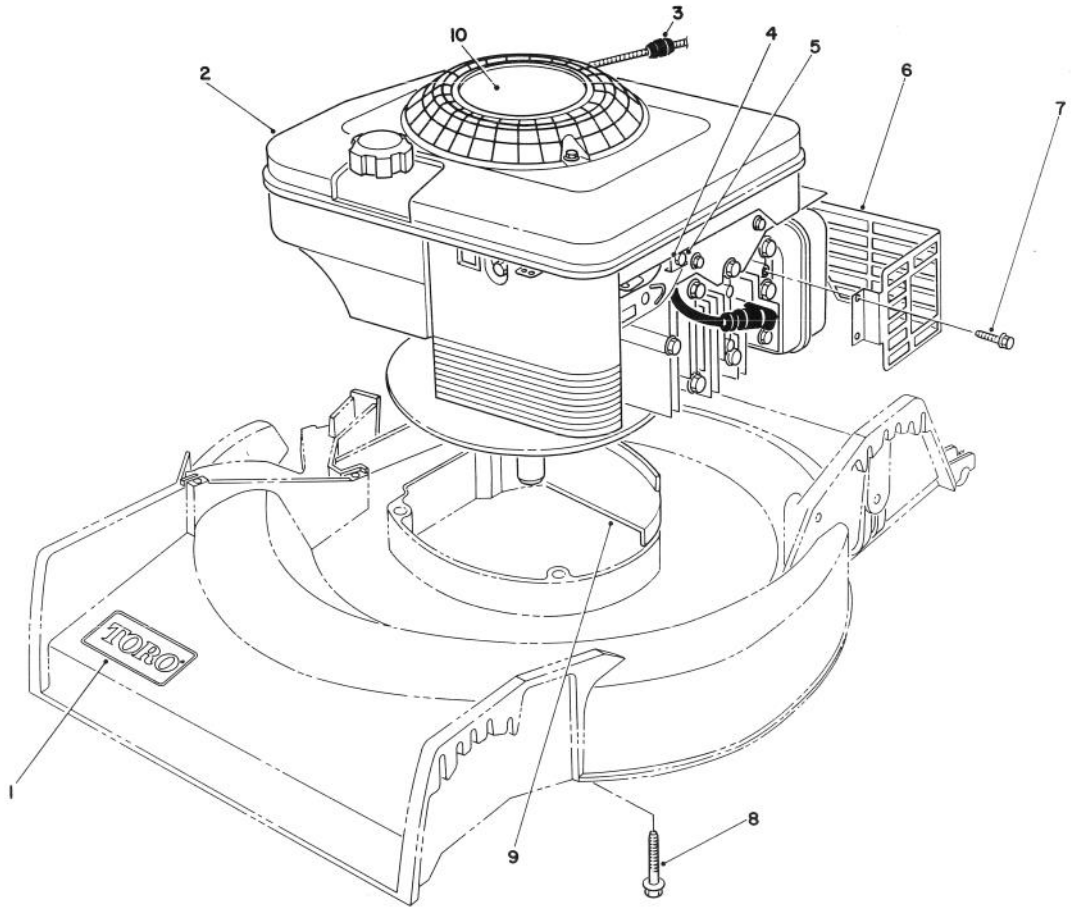

C–0666

ENGINE ASSEMBLY

Ref. No.	Part No.	Description	No. Used
1	71–0600	Decal – Toro	1
2		Engine	1
3	2210–316	Stop – Rope	1
4	2210–249	Clamp – Casing	1
5	2210–313	Screw – Clamp	1
6	82–8550	Shield – Muffler	1

Ref. No.	Part No.	Description	No. Used
7	32144–73	Screw – Hex Washer Hd. Thread Forming	3
8	32144–105	Screw – Engine	3
9	27–7470	Cap – Housing	1
10	80–2860	Decal – Engine	1

3314–632A

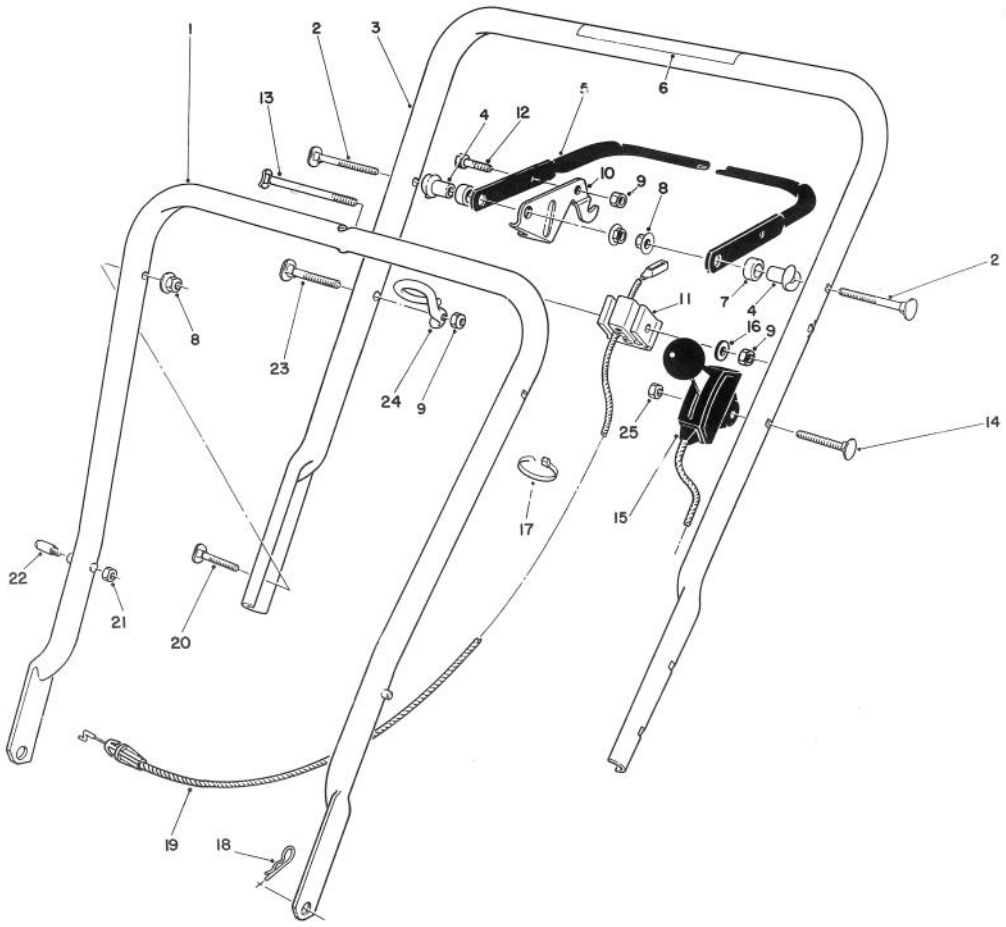

C–0800

HANDLE ASSEMBLY

Ref. No.	Part No.	Description	No. Used
1	49–1690	Lower Handle Assembly	1
2	17–9421	Screw – Handle	2
3	13–2369	Handle – Upper (Incl. Ref. #6)	1
4	49–1630	Support – Spacer	2
5	71–3080	Bar – Control	1
6	63–8540	Decal – Warning	1
7	256–276	Spacer – Nylon	2
8	3296–58	Nut – Flange Lock	4
9	3296–42	Nut – Lock	3
10	77–5270	Lever – Control	1
11	46–6980	Support – Cable	1
12	321–3	Capscrew	1
13	46–6434	Screw – Handle	1
14	46–6430	Screw – Handle	1

Ref. No.	Part No.	Description	No. Used
15	76–3248	Control – Throttle (Bend Type #1) (Sheath Lg. 44–1/4") (Wire Lg. 2–1/16")	1
16	3256–22	Washer – Flat	1
17	3290–378	Tie – Cable	2
18	3290–255	Pin – Cotter Hair	2
19	76–4332	Cable – Brake	1
20	17–9424	Screw – Handle	2
†21	3296–47	Nut – Lock	2
†22	49–2750	Pin – Handle	2
23	46–6433	Screw – Handle	1
24	46–8080	Guide – Rope	1
25	3296–56	Nut – Lock	1

† Service Replacement Part

3314–632A

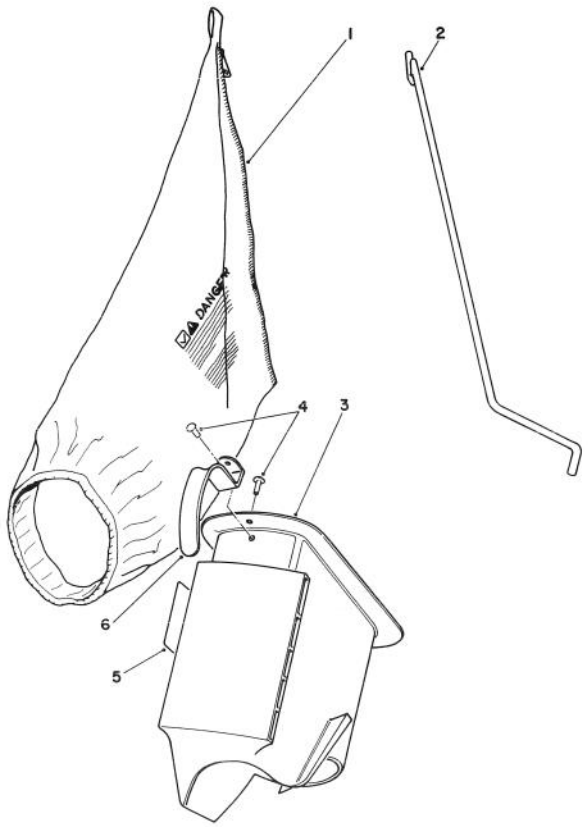

C–0187

BAGGING KIT NO. 47–6510 (Optional)

Ref. No.	Part No.	Description	No. Used
1	6–0929	Grass Bag	1
2	47–5830	Bag Rod	1
3	6–1089	Grass Chute (Incl Ref #4 & 6)	1

Ref. No.	Part No.	Description	No. Used
4	3295–26	Rivet	2
5	36–5230	Decal – Bag Chute	1
6	20–4650	Handle Chute	1

3314–632A

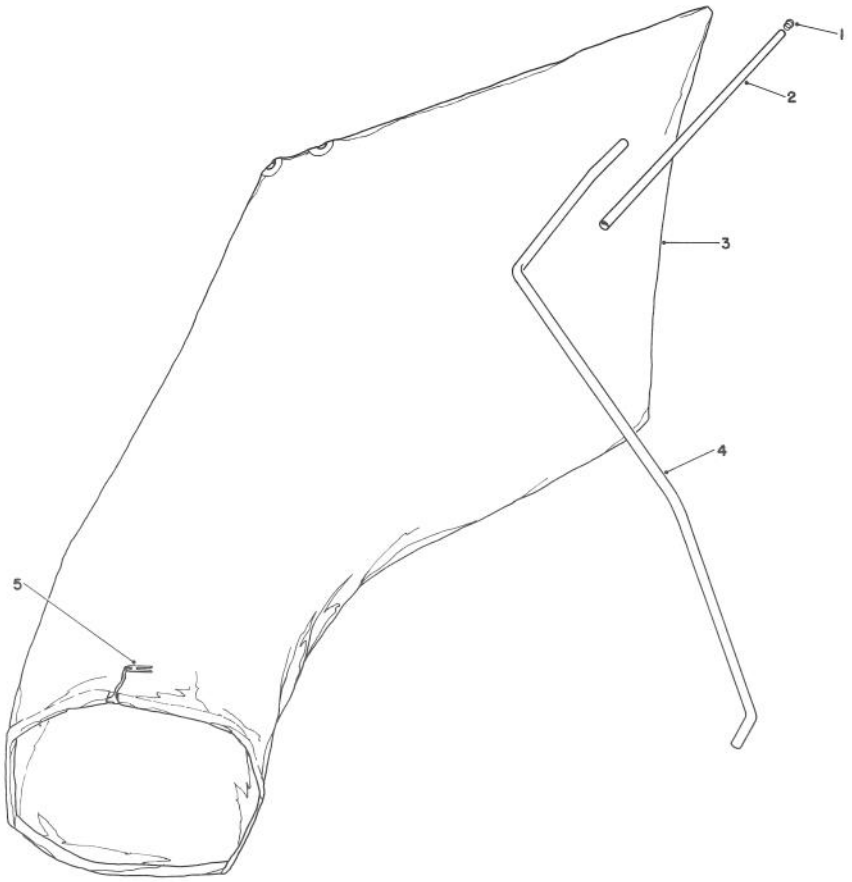

C–0186

GIANT BAGGING KIT NO. 29–9750 (Optional)

Ref. No.	Part No.	Description	No. Used
1	2410–29	Cap	1
2	29–7000	Tube 25"	1
3	8–4719	Bag (Incl. Ref. #5)	1

Ref. No.	Part No.	Description	No. Used
4	22–4820	Hanger Rod	1
5	3–2781	Bag Cord Fasteners	1

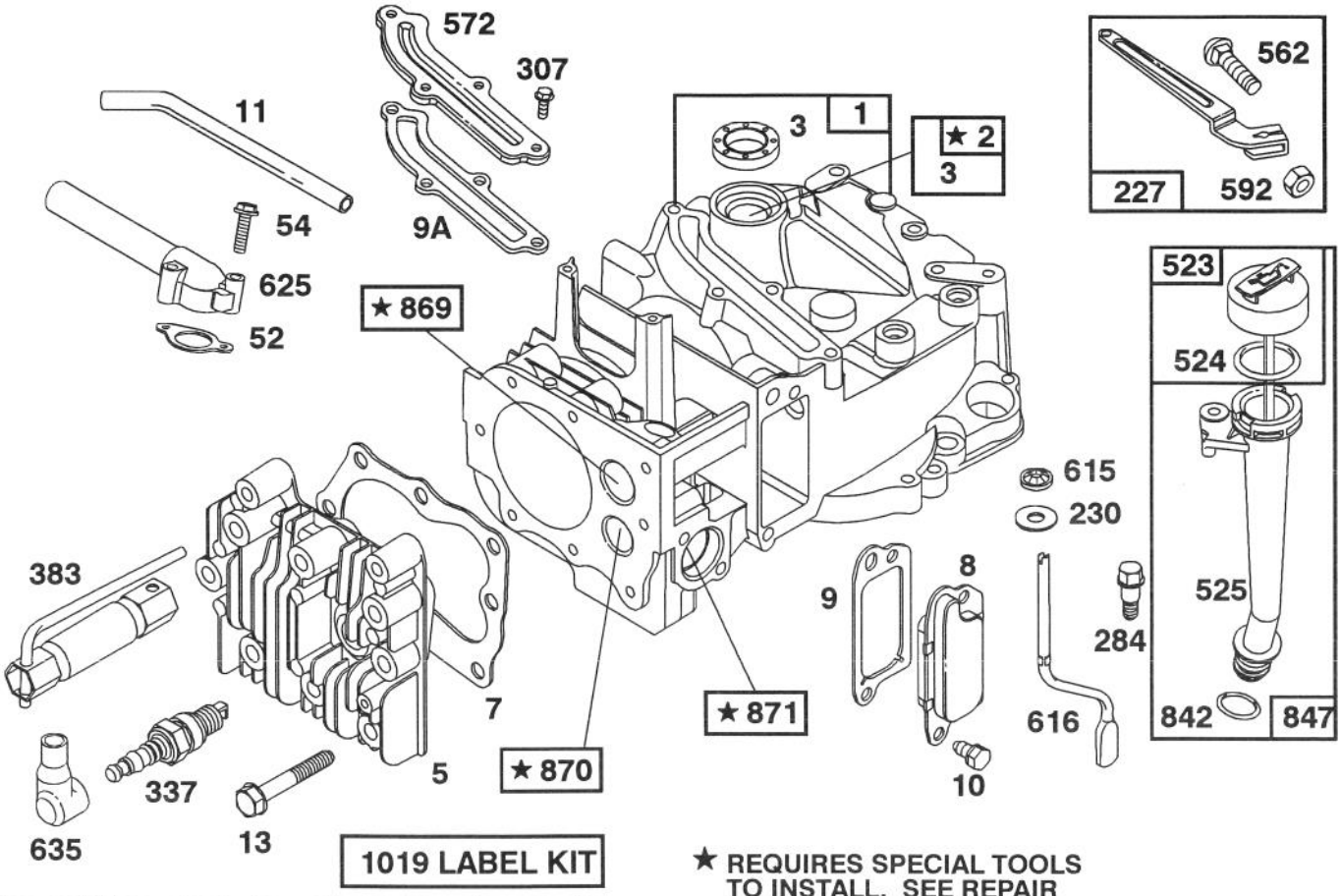

★ REQUIRES SPECIAL TOOLS TO INSTALL. SEE REPAIR INSTRUCTION MANUAL.

Assemblies include all parts shown in frames.

ENGINE BRIGGS & STRATTON MODEL 122702–3171–01

Ref. No.	Part No.	Description	No. Used
1	493260	Cylinder Assembly	1
2	293708	Bushing–Cylinder Note: Requires Special Tools for Installation.	1
★3	393862	Seal–Oil	1
5	213861	Head–Cylinder	1
★7	272200	Gasket–Cylinder Hd.	1
8	399717	Breather–Valve Chamber	1
★9	271904	Gasket–Valve Cover	1
★9A	272238	Gasket–Baffle Plate	1
10	94222	Mounting Sem	1
11	231685	Tube–Breather	1
13	94547	Screw–Cylinder Hd.	1
★52	272199	Gasket–Intake Elbow	1
54	94526	Screw–Intake Elbow Mounting	1
227	492349	Lever Assembly–Gov.	1
230	67072	Washer–Governor Crank	1
284	94511	Screw–Hex. Head	1
307	94515	Screw–Hex. Head	1
337	802592	Plug–Spark	1
383	89838	Wrench–Spark Plug	1

Ref. No.	Part No.	Description	No. Used
523	493950	Cap with Dipstick–Oil Filler	1
524	280393	Seal–Filler Tube	1
525	493952	Tube–Oil Filler	1
562	92613	Bolt–Governor Lever	1
572	224328	Baffle–Cylinder	1
592	231082	Nut–Hex.	1
615	94474	Pushnut (Governor Crank)	1
616	262578	Crank–Governor	1
625	492717	Tube–Fuel Intake	1
635	66538	Elbow–Spark Plug	1
842	280966	Seal–O–Ring	1
847	493459	Oil Fill Tube and Dipstick Assy.	1
869	213512	Seat–Intake Valve	1
870	213513	Seat–Exhaust Valve	11
871	262001	Guide–Exhaust Valve Note:63709 Guide–Intake Valve See Repair Instruction Manual.	1
1019	494256	Label Kit	1

★ Included in Gasket Set– Part No. 493263.

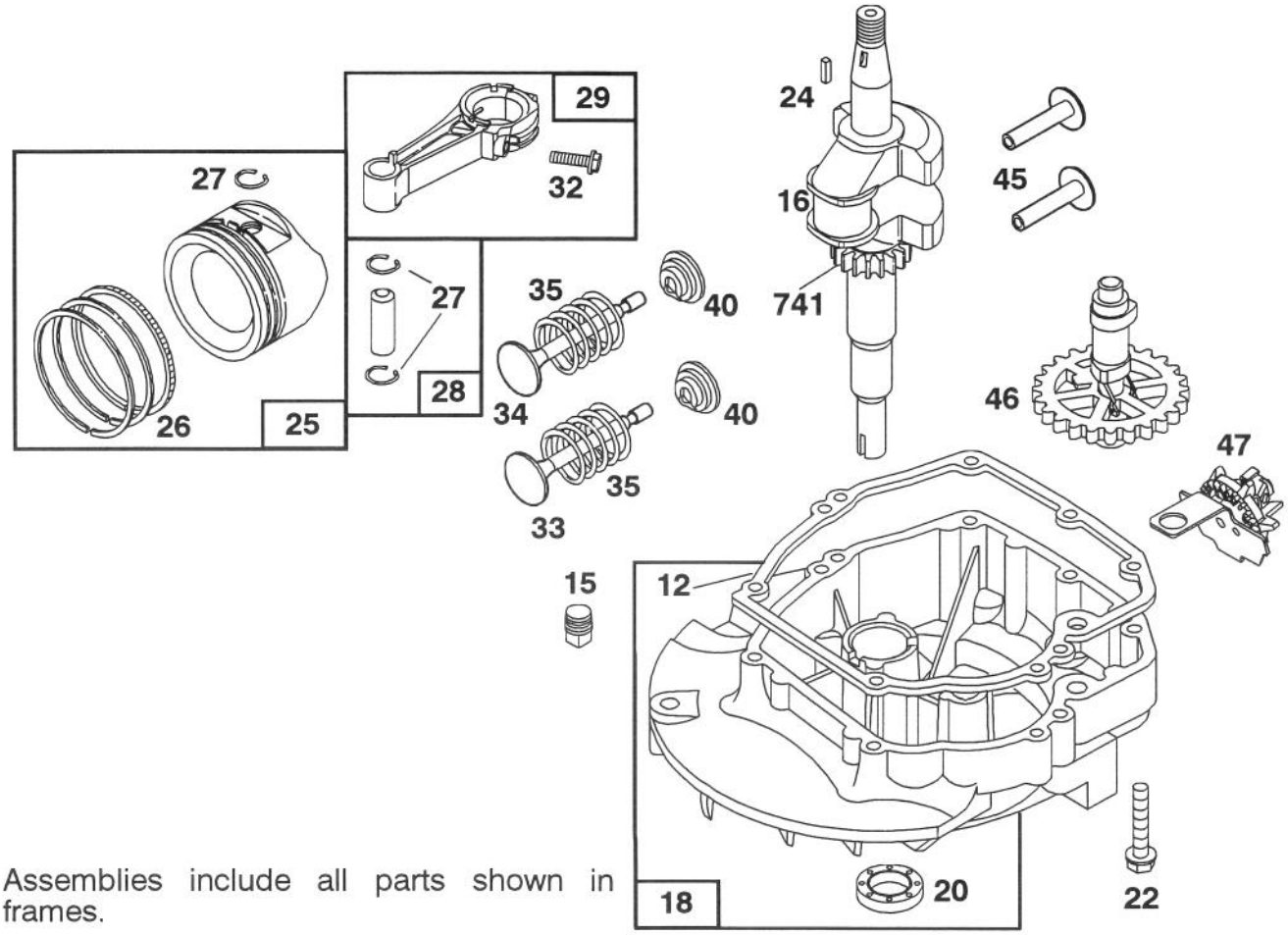

Assemblies include all parts shown in frames.

ENGINE BRIGGS & STRATTON MODEL 122702–3171–01

Ref. No.	Part No.	Description	No. Used
*12	272198	Gasket–Crankcase	1
15	94613	Plug–Oil Drain	1
16	493731	Crankshaft	1
		Note: Order 94388 For Timing Gear Key	1
18	493279	Sump–Engine	1
*20	399781	Seal–Oil	1
22	94220	Screw–Sump Mtg. Sem	1
		Note: 94612 Screw–Hex. Washer Head (One (1) Used in Hole Nearest Breather)	1
24	222698	Key–Flywheel	1
25	493262	Piston Assy.–Standard	1
	493385	Piston Assy.–.010" O.S.	1
	493386	Piston Assy.–.020" O.S.	1
	493387	Piston Assy.–.030" O.S.	1
		PISTON RING SETS:	1
		Note: For Chrome Piston Ring Set–Standard Size–Order Part No. 493391.	1
26	493261	Ring Set–Std. Piston	1
	493388	Ring Set–.010" O.S. Piston	1
	493389	Ring Set–.020" O.S. Piston	1
	493390	Ring Set–.030" O.S. Piston	27
	26026	Lock–Piston Pin	28
	298909	Pin Assembly–Piston–Standard	1
	298908	Pin Assembly–Piston–.005" O.S.	1
29	490566	Rod Assembly– Connecting	1
		Note: For Connecting Rod with .020" Undersize Crankpin Bearing– Order No. 490743.	1
32	94405	Screw–Connecting Rod	1
33	262651	Valve–Exhaust	1
34	262652	Valve–Intake	1
35	262224	Spring–Valve	1
40	93312	Retainer–Valve Spring	1
45	262204	Tappet–Valve	1
46	492828	Gear–Cam	1
47	493737	Oil Slinger Gear and Bracket	1
741	262598	Gear–Timing	1

* Included in Gasket Set– Part No. 493263.

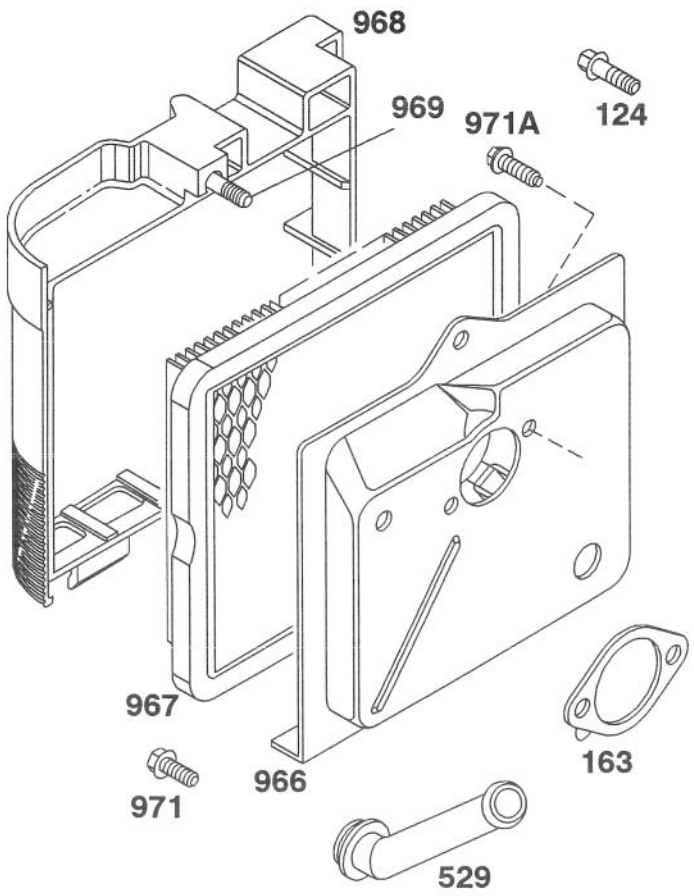

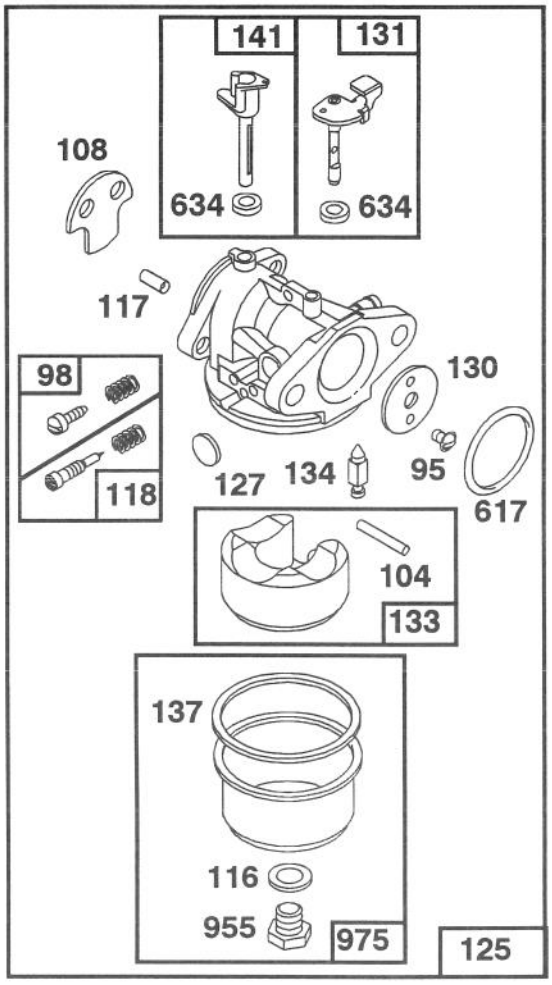

Assemblies include all parts shown in frames.

ENGINE BRIGGS & STRATTON MODEL 122702–3171–01

Ref. No.	Part No.	Description	No. Used
95	94098	Screw–Throttle Valve Mounting Sem	1
98	398185	Screw–Idle Adjustment	1
*104	231371	Pin–Float Hinge	1
108	223471	Valve–Choke	1
●◆116		Gasket–Sealing (Sold in Kit Only).	1
●117		Jet (Sold in Kit Only).	1
118	493765	Valve and Spring– Needle	1
124	94525	Screw–Carburetor Mtg.	1
125	494216	Carburetor Assembly	1
●127		Plug–Welch (Sold in Kit Only).	1
130	223470	Valve–Throttle	1
131	493267	Shaft and Lever– Throttle	1
133	398187	Float Assy.–Carburetor	1
●134	398188	Valve–Inlet (Includes Seat)	1

Ref. No.	Part No.	Description	No. Used
●◆137		Gasket–Bowl (Sold in Kit Only).	1
141	494218	Shaft–Choke	1
*163	272296	Gasket–Air Cleaner	1
529	280943	Grommet–Breather	1
●◆617	270344	Seal–Fuel Intake Tube	1
●◆634		Washer–Shaft (Sold in Kit Only)	1
955	493763	Screw–Bowl Mtg.	1
966	492363	Base–Air Cleaner	1
967	491588	Filter–Air	1
968	280937	Cover–Air Cleaner	1
969	94120	Screw–Cover Mtg.	1
971	94269	Screw–Air Cleaner	1
971A	94121	Screw–Base to Carburetor	1
975	493640	Bowl Assy.	1

● Included in Carburetor Overhaul Kit– Part No. 493762.
◆ Included in Carburetor Gasket Set– Part No. 490937.
* Included on Gasket Set– Part No. 493263.

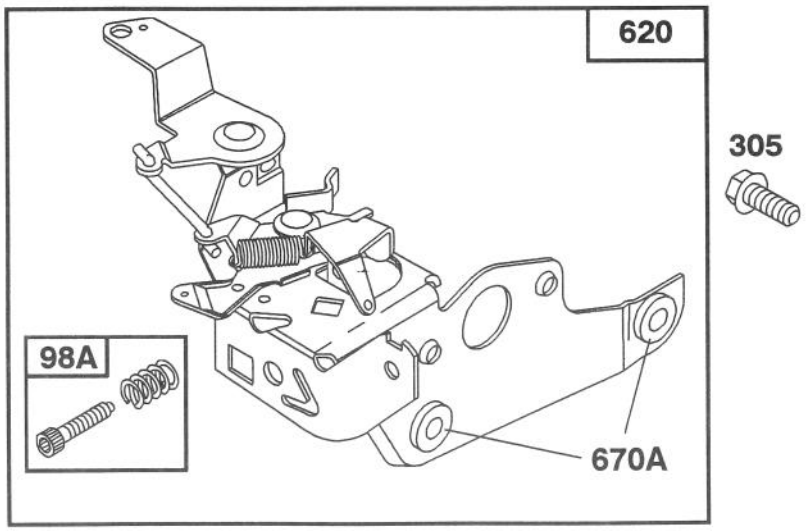

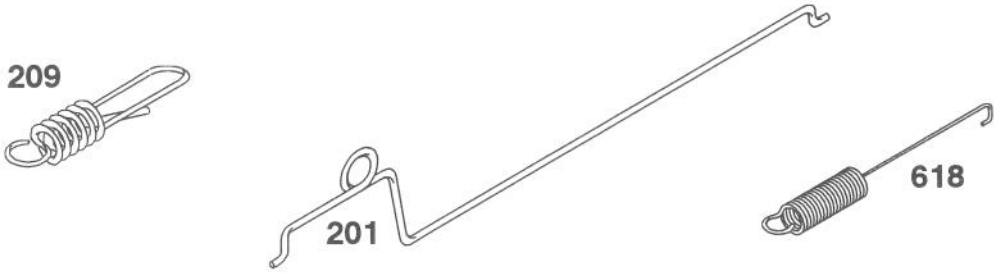

Assemblies include all parts shown in frames.

ENGINE BRIGGS & STRATTON MODEL 122702–3171–01

Ref. No.	Part No.	Description	No. Used
98A	493280	Screw Assy.– Speed Adj.	1
201	262579	Link–Governor	1
209	262661	Spring–Governor	1
305	94513	Screw–Hex. Head Sem	

Ref. No.	Part No.	Description	No. Used
618	262749	Spring–Choke Return	1
620	493894	Bracket Assembly– Carburetor Control	1
670A	493823	Spacer–Carburetor Bracket	1

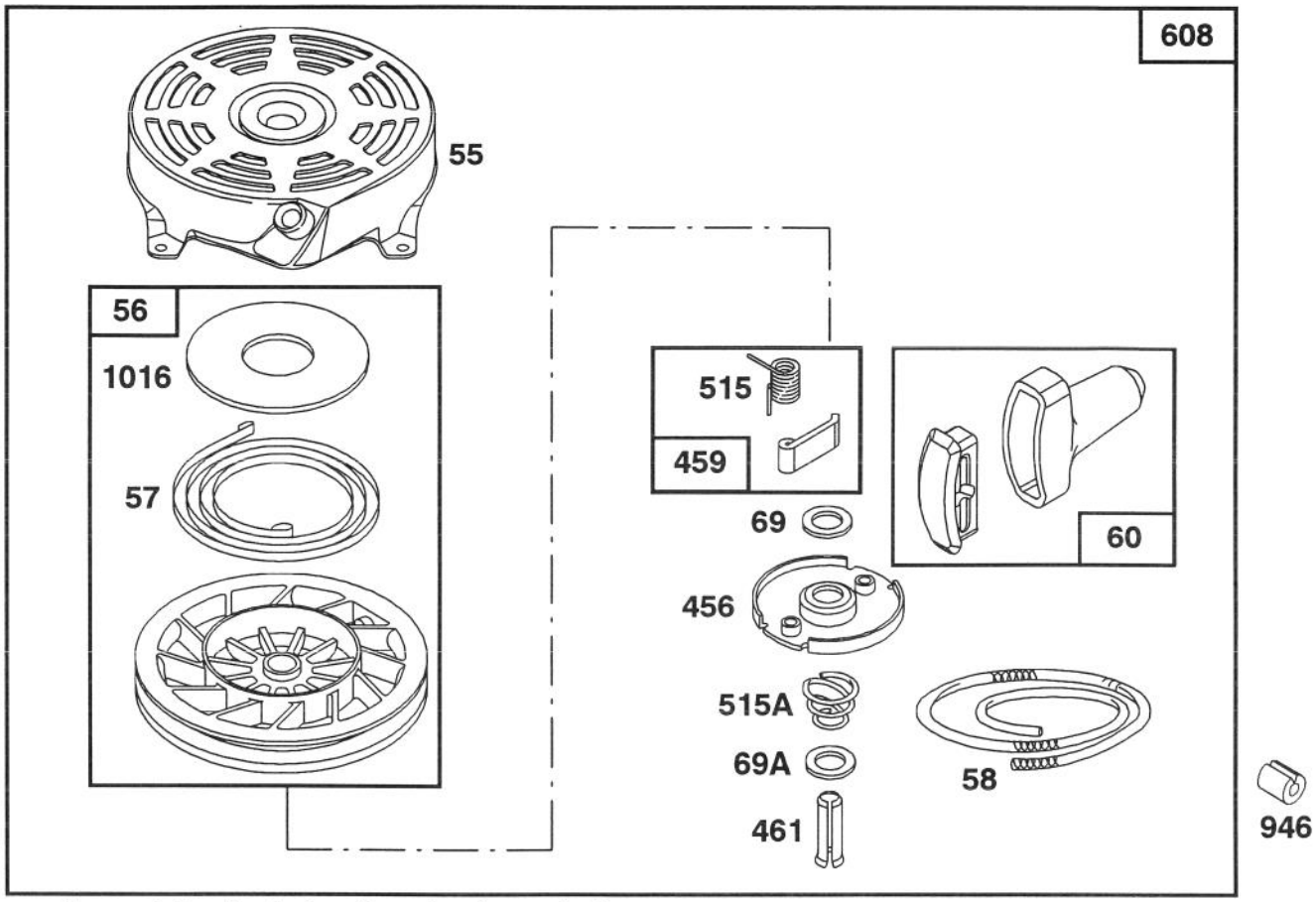

Assemblies include all parts shown in frames.

ENGINE BRIGGS & STRATTON MODEL 122702–3171–01

Ref. No.	Part No.	Description	No. Used
55	492831	Housing–Rewind Starter	1
56	492832	Pulley–Rewind Starter	1
57	262594	Spring–Rewind Starter	1
58	280399	Rope–Rewind Starter	1
60	393152	Handle–Rewind Starter	1
69	280973	Washer–Rewind Starter	1
69A	224322	Washer–Rewind Starter	1
456	224321	Retainer–Rewind Starter	1

Ref. No.	Part No.	Description	No. Used
459	492833	Pawl–Starter	1
461	262626	Pin–Starter	1
515	262556	Spring–Pawl	1
515A	262625	Spring–Torsion	1
608	493295	Starter Assy.–Rewind	1
946	223294	Stop Rope	1
1016	224278	Cover–Rewind Starter	1

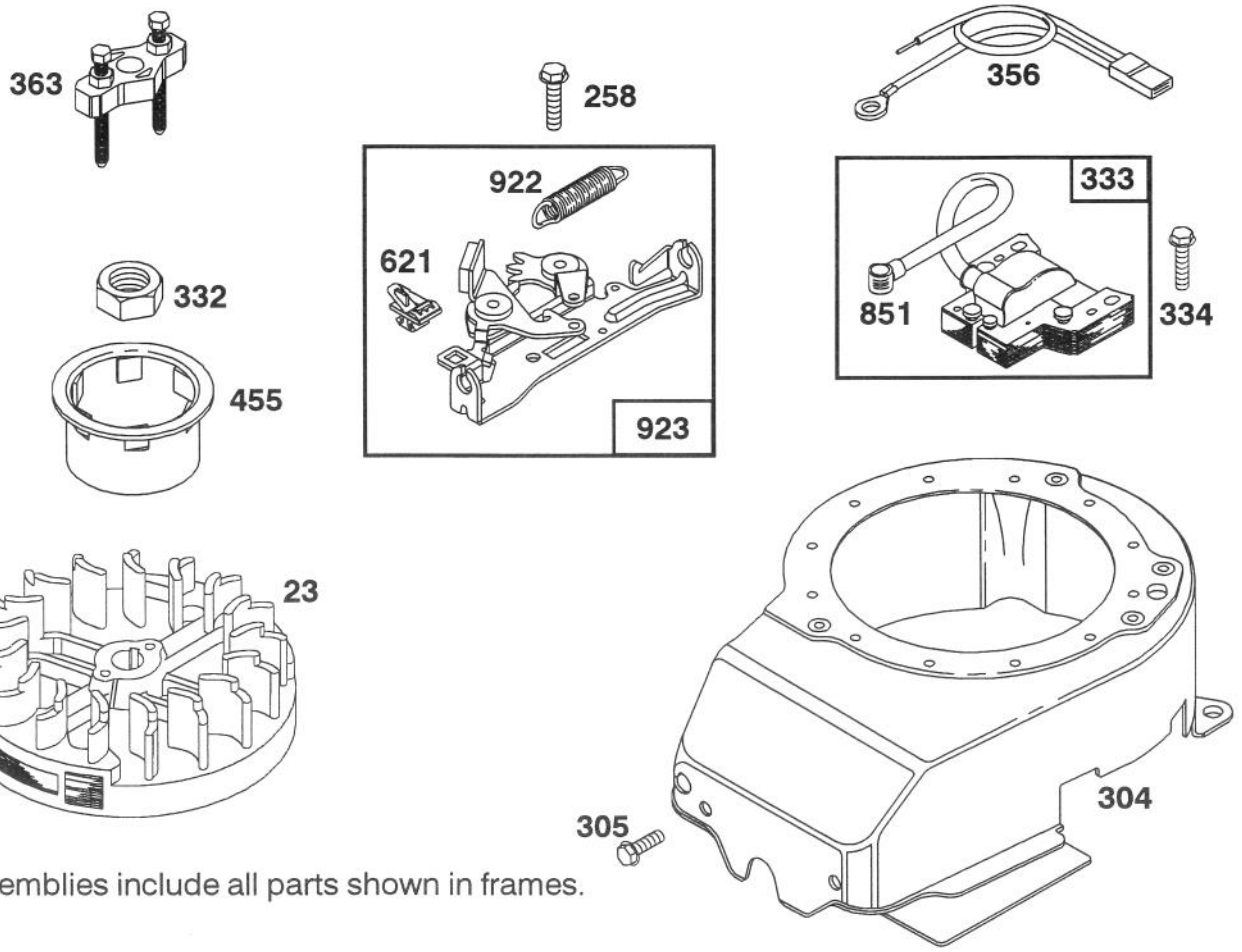

Assemblies include all parts shown in frames.

ENGINE BRIGGS & STRATTON MODEL 122702–3171–01

Ref. No.	Part No.	Description	No. Used
23	492177	Flywheel–Magneto	1
258	94512	Screw–Hex. Hd.	1
304	493293	Housing– Blower	1
305	94513	Screw–Hex. Head Sem	1
332	92284	Nut–Flywheel	1
333	802574	Armature–Magneto	1
334	93381	Screw–Armature Mounting Sem	1

Ref. No.	Part No.	Description	No. Used
356	398808	Wire–Ground	1
363	19069	Puller–Flywheel (Optional Accessory)	1
455	224250	Cup–Starter	1
621	396847	Switch–Stop	1
851	221798	Terminal–Ignition Cable	1
922	262640	Spring–Brake	1
923	492918	Brake Assy.	1

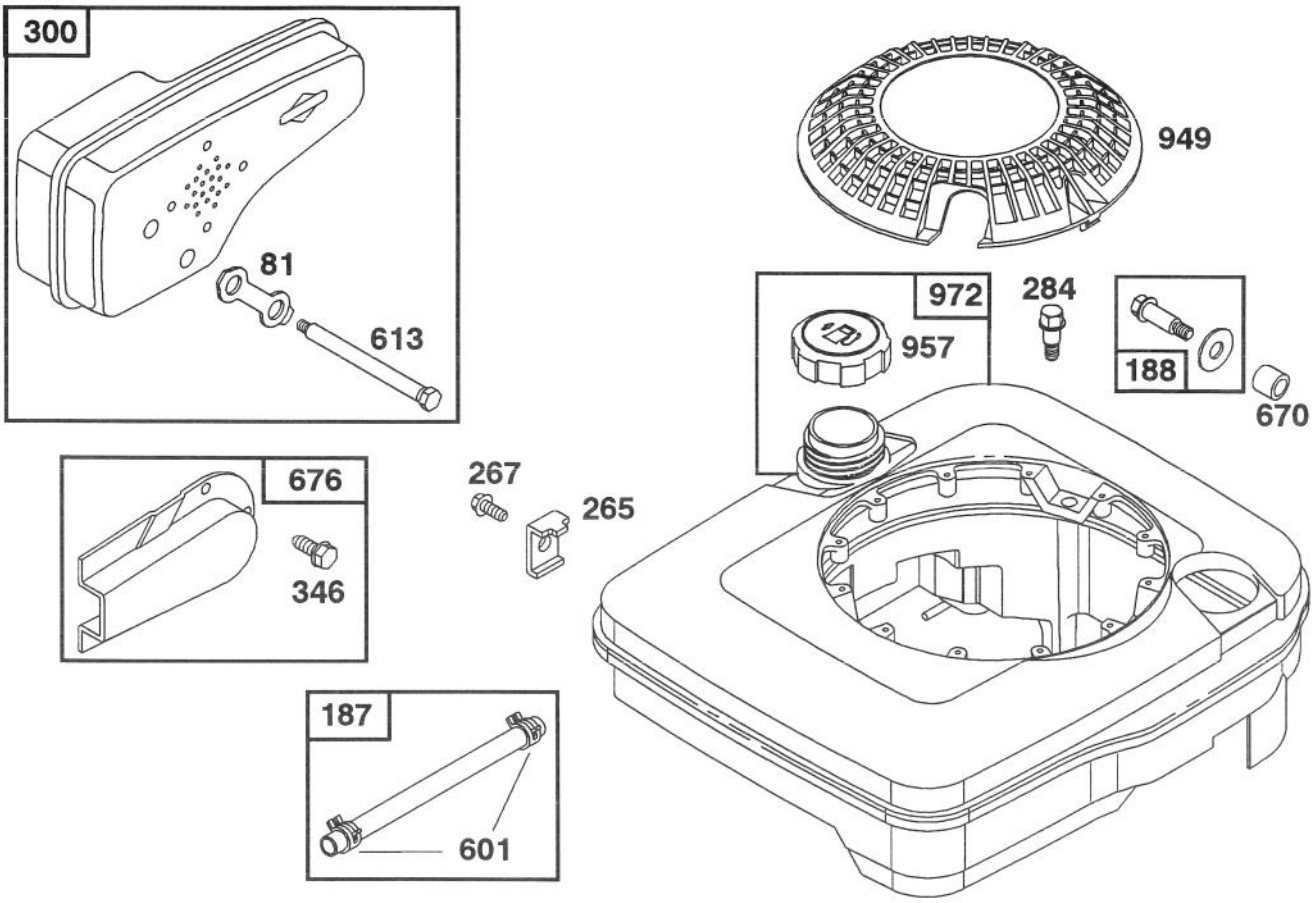

Assemblies include all parts shown in frames

ENGINE BRIGGS & STRATTON MODEL 122702–3171–01

Ref. No.	Part No.	Description	No. Used
81	223664	Lock–Muffler Screw	1
187	492790	Hose–Fuel	1
188	398540	Screw–Tank Mounting (Includes Washer)	1
265	221535	Clamp–Casing	1
267	94204	Screw–Clamp Mtg.	1
284	94511	Screw–Hex. Head	1
300	490547	Muffler–Exhaust	1

Ref. No.	Part No.	Description	No. Used
346	93705	Screw–Hex. Head	1
601	93807	Clamp–Hose	1
613	94231	Screw–Muffler Mtg.	1
670	280512	Spacer–Fuel Tank	1
676	493871	Deflector–Muffler	1
949	281136	Screen–Static	1
957	397974	Cap Assy.–Fuel	1
972	494358	Tank Assembly–Fuel	1

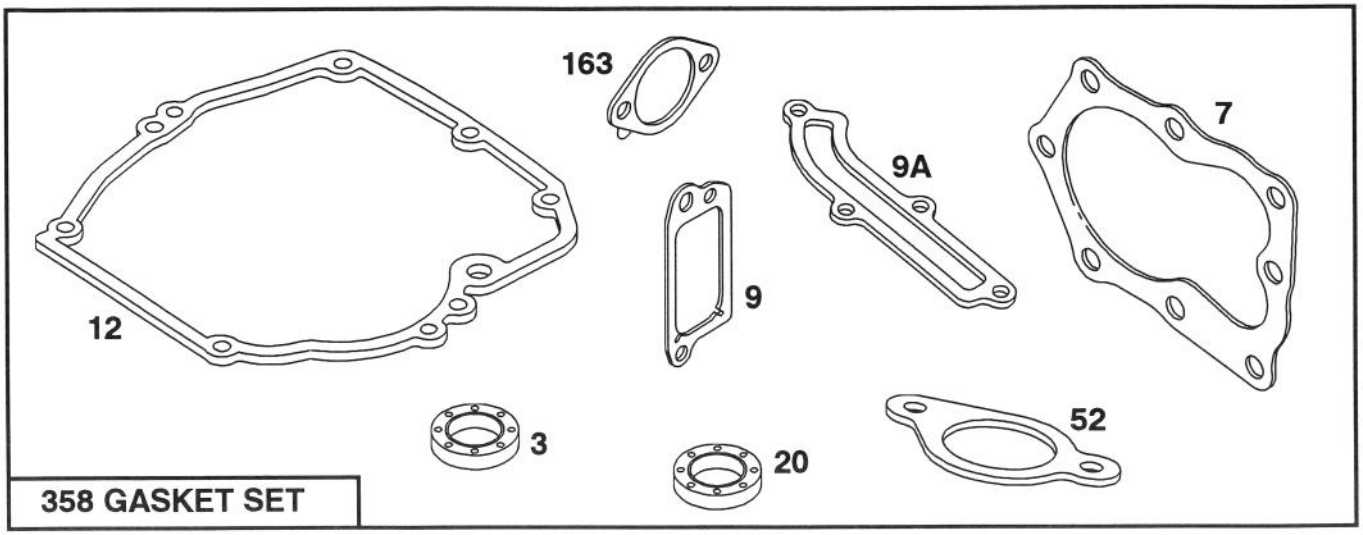

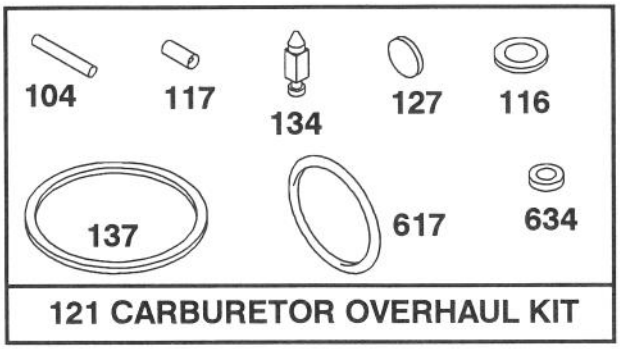

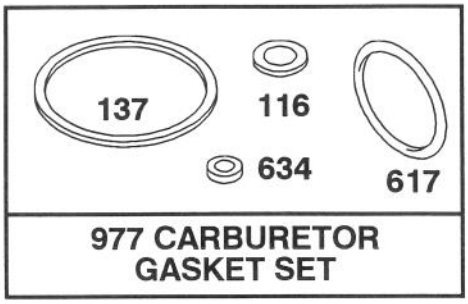

Assemblies include all parts shown in frames.

ENGINE BRIGGS & STRATTON MODEL 122702–3171–01

Ref. No.	Part No.	Description	No. Used
★3	393862	Seal–Oil	1
★7	272200	Gasket–Cylinder Hd.	1
★9	271904	Gasket–Valve Cover	1
★9A	272238	Gasket–Baffle Plate	1
★12	272198	Gasket–Crankcase	1
★20	399781	Seal–Oil	1
★52	272199	Gasket–Intake Elbow	1
•104	231371	Pin–Float Hinge	1
••◆116		Gasket–Sealing (Sold in Kit Only).	1
•117		Jet (Sold in Kit Only).	1
121	493762	Carburetor Overhaul Kit	1

Ref. No.	Part No.	Description	No. Used
•127		Plug–Welch (Sold in Kit Only).	1
•134	398188	Valve–Inlet (Includes Seat)	1
••◆137		Gasket–Bowl (Sold in Kit Only).	1
★163	272296	Gasket–Air Cleaner	1
358	493263	Gasket Set	1
••617	270344	Seal–Fuel Intake Tube	1
••◆634		Washer–Shaft (Sold in Kit Only)	1
977	490937	Gasket Set–Carburetor	1

• Included in Carburator Overhaul Kit– Part No. 493762.
◆ Included in Carburetor Gasket Set– Part No. 490937.
★ Included in Gasket Set– Part No. 493263.

PRODUCT CHANGES

in an effort to make improvements available to TORO owners as quickly as possible, minor changes are incorporated into Toro's products from time to time that do not become immediately shown in the Parts Catalog. If such a change has been made in your unit, which is not reflected in your manual, see your TORO Distributor or his Authorized TORO Service Dealer for information and part numbers.

COUNTRIES OTHER THAN THE UNITED STATES OR CANADA

Customers who have purchased TORO products exported from the United States or Canada should contact their Toro Distributor (Dealer) to obtain guarantee policies for yourcountry, province or state. If for any reason you are dissatisfied with your distributor's service or have difficulty obtaining guarantee information, contact the TORO importer. If all other remedies fail, you may contact us at The Toro Company.

MAINTENANCE RECORD

Date								

Compliance with Radio Interference Regulations Certified.
Certifie Conforme au Reglement sur le Brouillage Radioelectrique.

MAINTENANCE RECORD

Date								

MAINTENANCE RECORD

Date								