FORM NO. 3314–666 REV. A

TORO®

MODEL NO. 16404–1000001–2000001 & UP

PARTS CATALOG

21" SIDE DISCHARGE MOWER

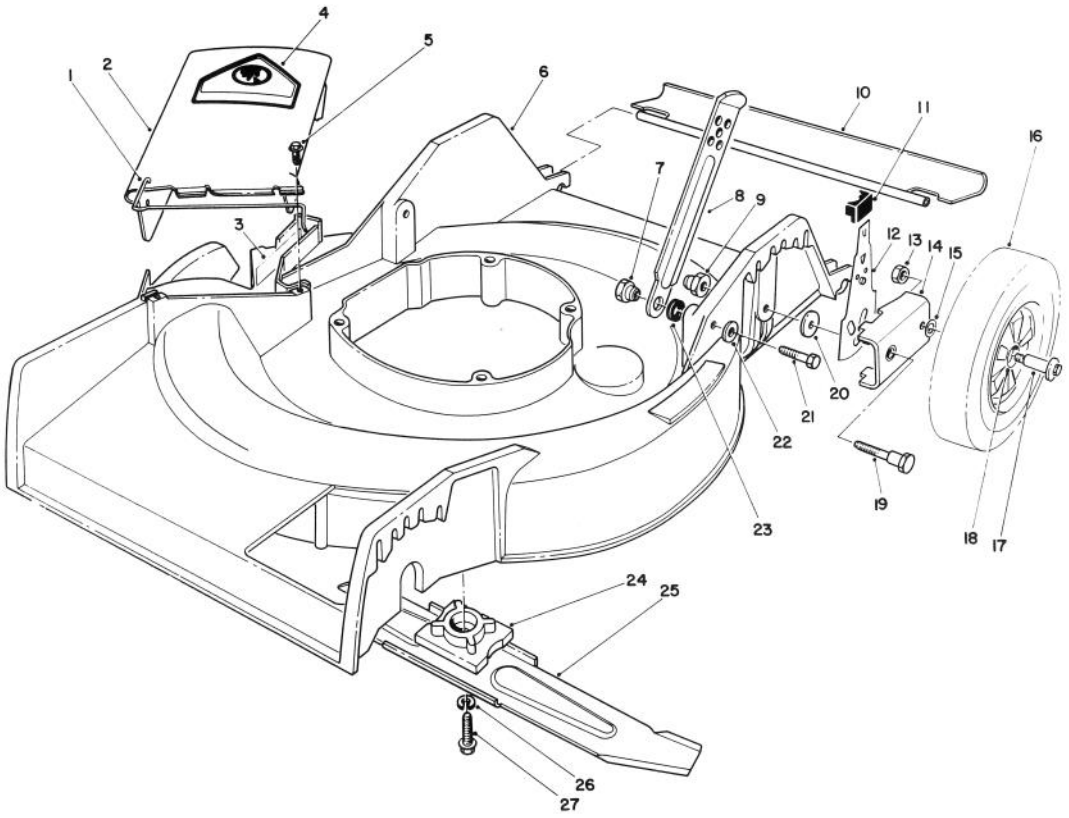

C–0803

HOUSING ASSEMBLY

Ref. No.	Part No.	Description	No. Used
1	20–2640	Hinge Spring	1
2	13–3429	Deflector (Incl. Ref. #1 & 3)	1
3	62–4200	Decal – Danger	1
4	56–6270	Decal Danger	1
5	46–6811	Screw Assembled Washer	2
6	13–3489	Housing – 21"	1
7	27–6520	Shoulder Nut	2
8	82–7620	Latch Handle	2
9	12–2080	Shoulder Nut	2
10	66–5990	Shield Rear	1
11	25–7740	Knob – Spring Arm	2
12	66–9260	Spring Arm – Rear L.H.	1
*	66–9250	Spring Arm – Rear R.H.	1
13	52–3620	Locknut	2

Ref. No.	Part No.	Description	No. Used
14	47–2940	Pivot Arm Assembly	2
15	40–1940	Washer – Wheel Bolt	2
16	11–9509	Wheel & Tire Assembly (Incl. Ref. #18)	2
17	27–6230	Wheel Bolt	2
18	27–6250	Bushing	4
19	44–5271	Pivot Screw	2
20	33–0390	Washer – Pivot	2
21	322–7	Capscrew Hex Hd.	2
22	3253–4	Washer – Lock	2
23	3–3287	Spacer – Handle Latch	2
24	49–7900	Retainer – Blade	1
25	20–2720	Blade – 21"	1
26	3253–22	Washer – Lock	1
27	26–0671	Screw – Blade	1

*Not Illustrated

TPS

© The TORO Company –1991 REV. 1992

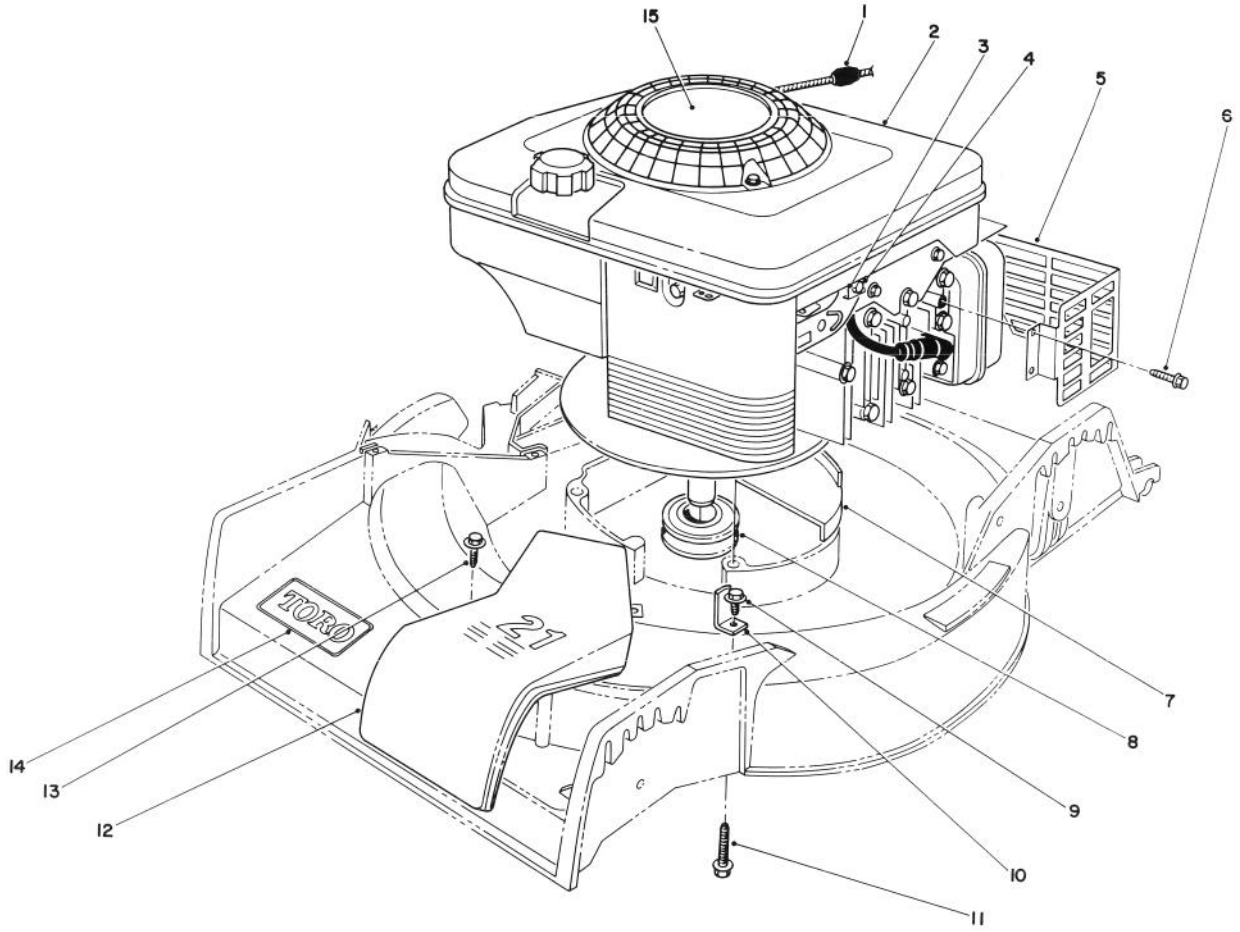

C–0667

ENGINE ASSEMBLY

Ref. No.	Part No.	Description	No. Used
1	2210–316	Stop – Rope	1
2		Engine	1
3	2210–249	Clamp – Casing	1
4	2210–313	Screw – Clamp	1
5	82–8550	Shield – Muffler	1
6	32144–73	Screw – Hex Washer Hd. Thread Forming	3
7	27–7470	Cap – Housing	1
8	46–7910	Pulley – Driver	1
9	32144–70	Screw – Thread Forming	1
10	70–8080	Guide – Belt	1
11	32144–105	Screw – Engine	3
12	46–4780	Cover – Belt	1
13	32144–112	Screw – Thread Forming	2
14	71–0600	Decal – Toro	1
15	80–2860	Decal – Engine	1

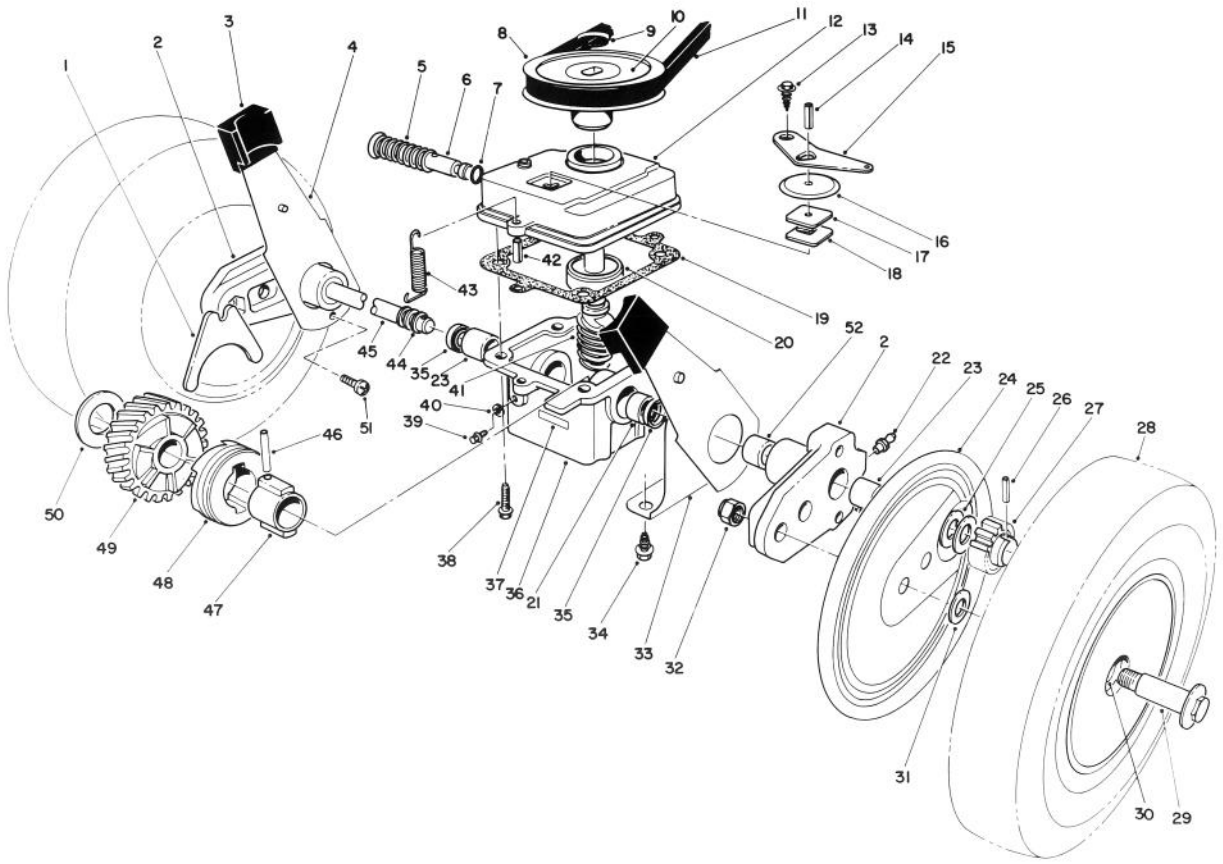

C–0504

GEAR CASE ASSEMBLY

Ref. No.	Part No.	Description	No. Used
1	5–3247	Fork – Shifter	1
2	66–6001	Arm – Pivot (Incl. Ref. #22, 23 & 52)	2
3	25–7740	Knob – Arm	2
4	67–9370	Spring Arm Assembly	2
5	3–0731	Spring	1
6	46–8240	Rod – Shifter	1
7	237–137	"O" Ring	1
8	18–9760	Pulley	1
9	3290–346	Retainer – Push On	1
10	33–2450	Decal – Caution	1
11	5–4505	V–Belt	1
12	39–1101	Cover – Gear Case	1
13	32140–64	Screw – Self Tapping	1
14	32121–114	Roll Pin	1
15	5–3252	Arm – Shifter	1
16	52–7380	Dust Cover – Transmission	1
17	52–7370	Filter – Dust	1
18	3–0681	Plate – Latch	1
19	36–1000	Gasket – Gear Case	1
20	47–7250	Ball Bearing	1
21	47–2890	Bushing	1
22	302–56	Fitting – Grease	2

Ref. No.	Part No.	Description	No. Used
23	47–2900	Bushing	3
24	63–5270	Cover – Wheel	2
25	46–6510	Washer – Thrust	4
26	32121–98	Pin – Coil	2
27	46–6520	Gear – Pinion	2
28	11–9519	Wheel, Tire & Gear Assy (Incl. Ref. #30)	2
29	27–6230	Bolt – Wheel	2
30	27–6250	Bushing – Wheel	4
31	40–1940	Washer – Wheel Bolt	2
32	52–3620	Locknut	2
33	68–9000	Cap – End	2
34	32144–70	Screw – Self Tapping	4
35	47–6730	Seal – Oil	2
36	8–0479	Gear Case (Incl. Ref. #21, 23, & 35)	1
37	40–4755	Decal	1
38	11–9760	Screw	4
39	28–1550	Screw – Nylon	1
40	46–9640	Gasket	1
41	8–5679	Worm Shaft & Gear (Incl. Ref. #49)	1
42	32121–1	Pin – Roll	2

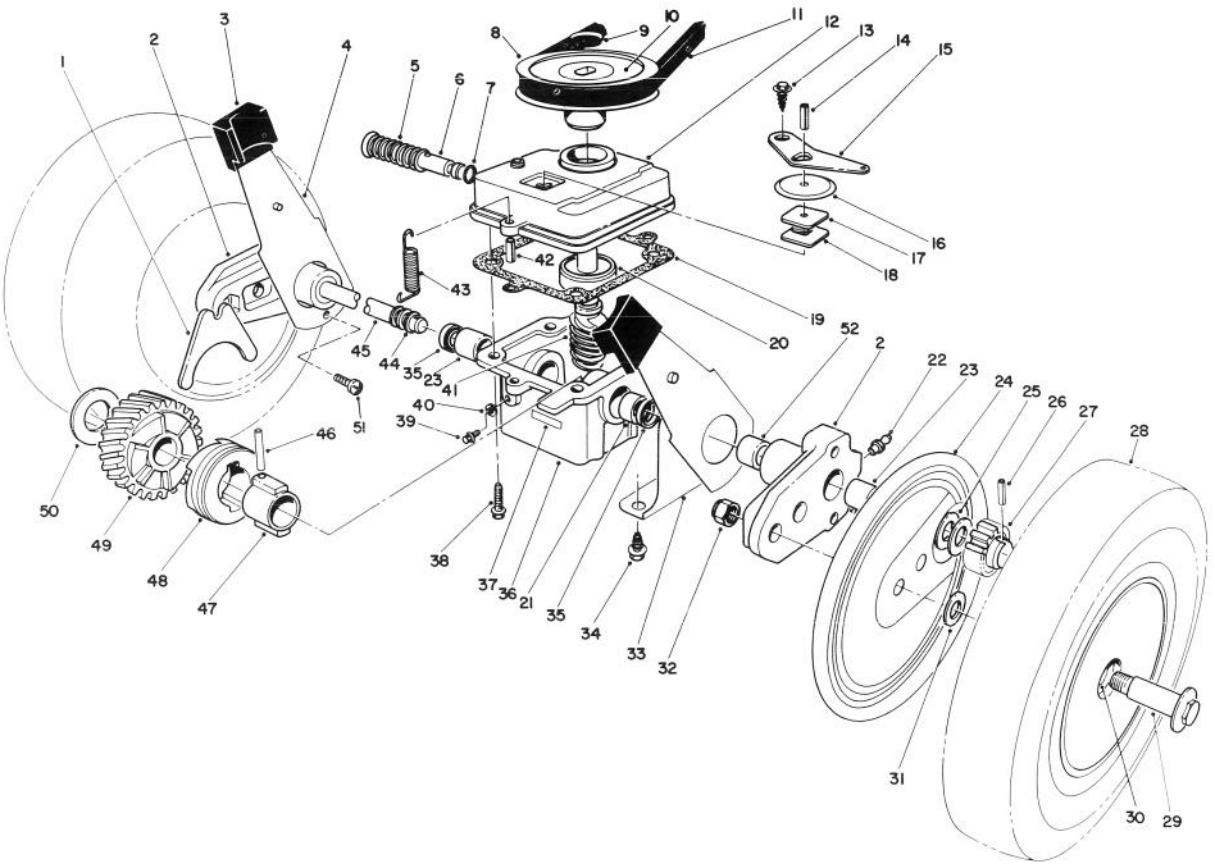

C–0504

GEAR CASE ASSEMBLY (Continued)

Ref. No.	Part No.	Description	No. Used
43	17–4490	Spring – Belt Tension	1
44	24–7920	Cover – Drive Shaft	1
45	66–6020	Shaft – Drive	1
46	32121–88	Pin – Coil	1
47	3–0721	Sleeve	1
48	19–5660	Jaw – Clutch	1
49		Helical Gear	1

Ref. No.	Part No.	Description	No. Used
50	3–0724	Washer – Thrust	1
51	63–8590	Screw Button Hd.	2
52	70–9760	Bushing	2
*	13–3479	Gear Case Assy. (Complete)	1
*	27–0490	Bearing & Shaft Tool	1
*†	39–9640	Metric Bearing Tool	1
*	27–0460	Tool Bushing	1

*Not Illustrated
† Use with 27–0490 Bearing & Shaft Tool

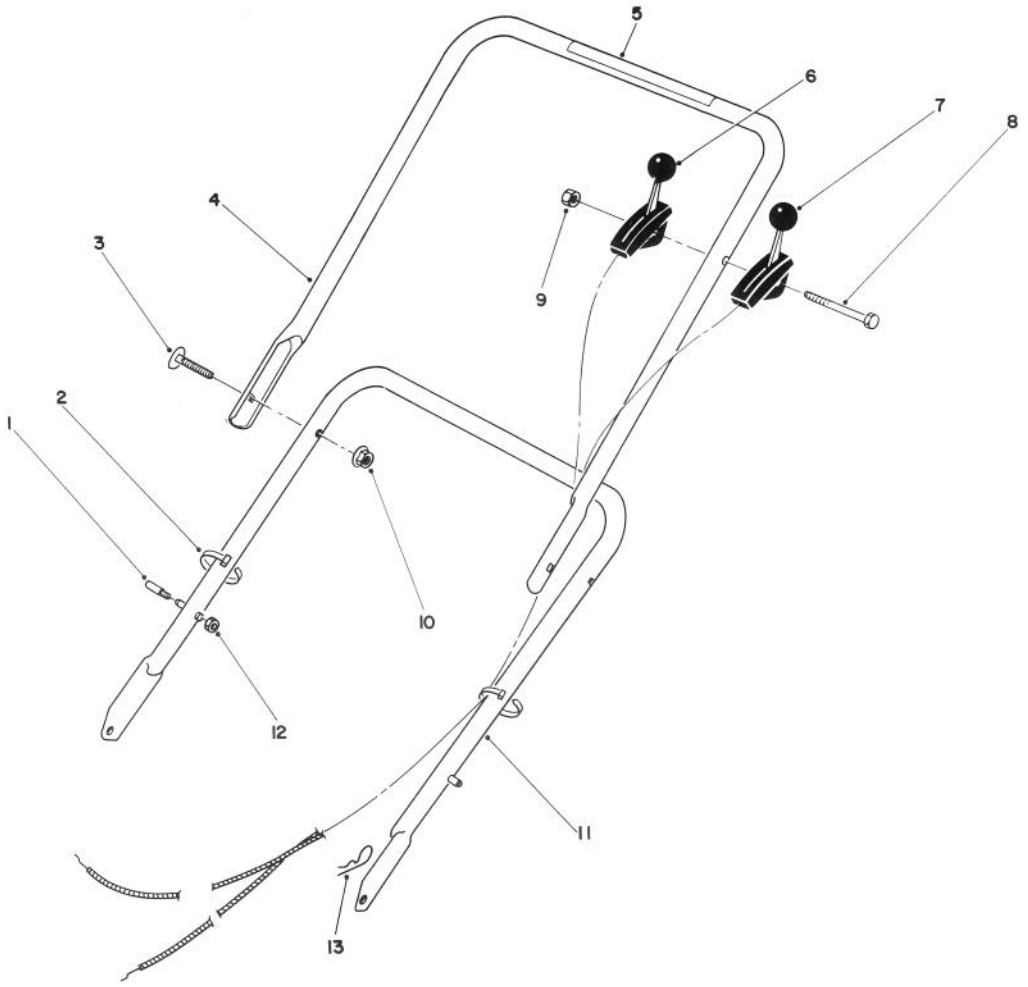

C-0805

HANDLE ASSEMBLY

Ref. No.	Part No.	Description	No. Used
†1	49-2750	Pin – Handle	2
2	3290-378	Tie – Cable	2
3	17-9424	Screw – Handle	2
4	13-2369	Handle – Upper (Incl. Ref. #5)	1
5	63-8540	Decal – Warning	1
6	74-3871	Control – Traction (Bend Type #3) (Sheath Lg. 50") (Wire Lg. 2-3/8")	1

Ref. No.	Part No.	Description	No. Used
7	76-3247	Control – Throttle (Bend Type #3) (Sheath Lg. 44-1/4") (Wire Lg.2-1/16")	1
8	321-15	Screw – Hex Hd. Cap	1
9	3296-42	Nut – Lock	1
10	3296-58	Nut – Hex Flange	2
11	49-1690	Lower Handle Assembly	1
†12	3296-47	Nut – Lock	2
13	3290-255	Hairpin – Cotter	2

† Service Replacement Parts

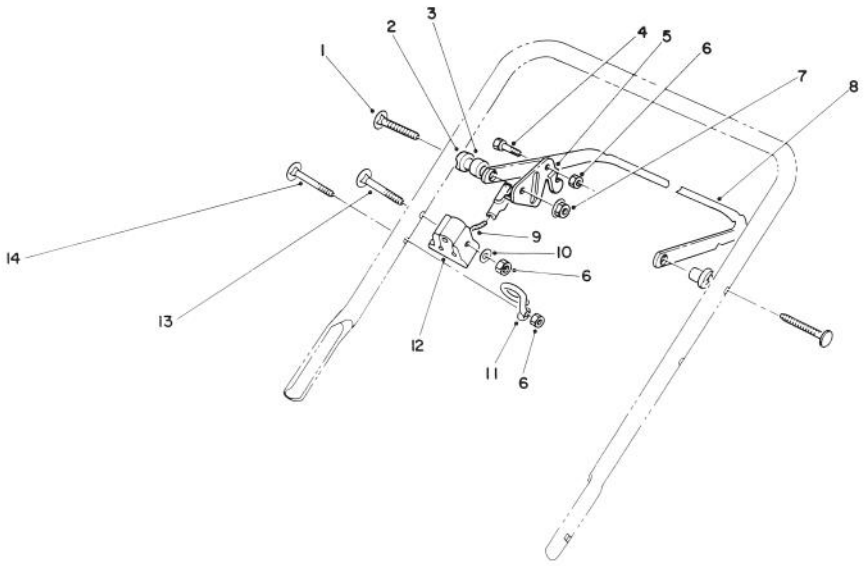

C–0806

TRACTION CONTROL ASSEMBLY

Ref. No.	Part No.	Description	No. Used
1	17–9421	Screw – Handle	2
2	49–1630	Support – Spacer	2
3	256–276	Spacer – Nylon	2
4	321–3	Screw – Hex Hd. Cap	1
5	77–5270	Lever – Control	1
6	3296–42	Nut – Lock	3
7	3296–58	Nut – Flange Lock	2

Ref. No.	Part No.	Description	No. Used
8	71–3080	Bar – Control	1
9	76–4332	Cable – Brake	1
10	3256–22	Washer – Flat	1
11	46–8080	Guide – Rope	1
12	46–6980	Support – Cable	1
13	46–6434	Screw – Handle	1
14	46–6433	Screw – Handle	1

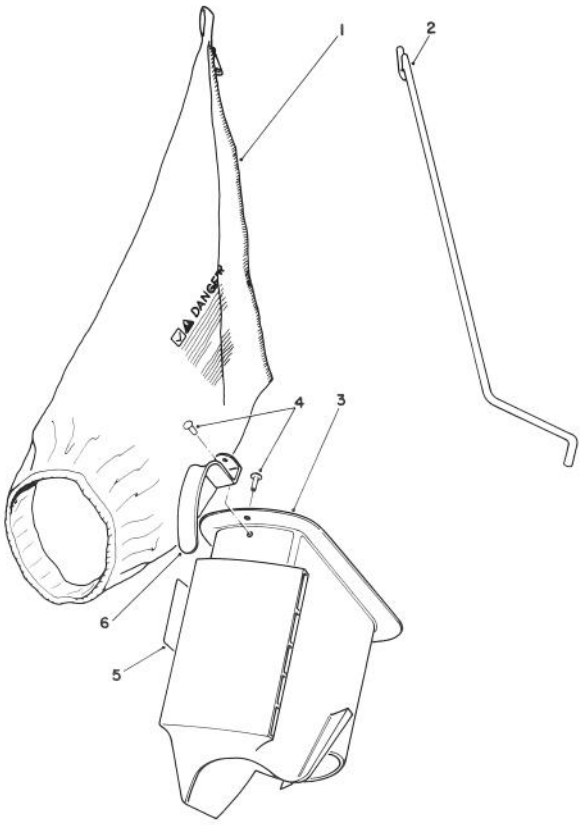

C–0187

BAGGING KIT NO. 47–6510 (Optional)

Ref. No.	Part No.	Description	No. Used
1	6–0929	Grass Bag	1
2	47–5830	Bag Rod	1
3	6–1089	Grass Chute (Incl. Ref. #4 & 6)	1

Ref. No.	Part No.	Description	No. Used
4	3295–26	Rivet	2
5	36–5230	Decal – Bag Chute	1
6	20–4650	Handle Chute	1

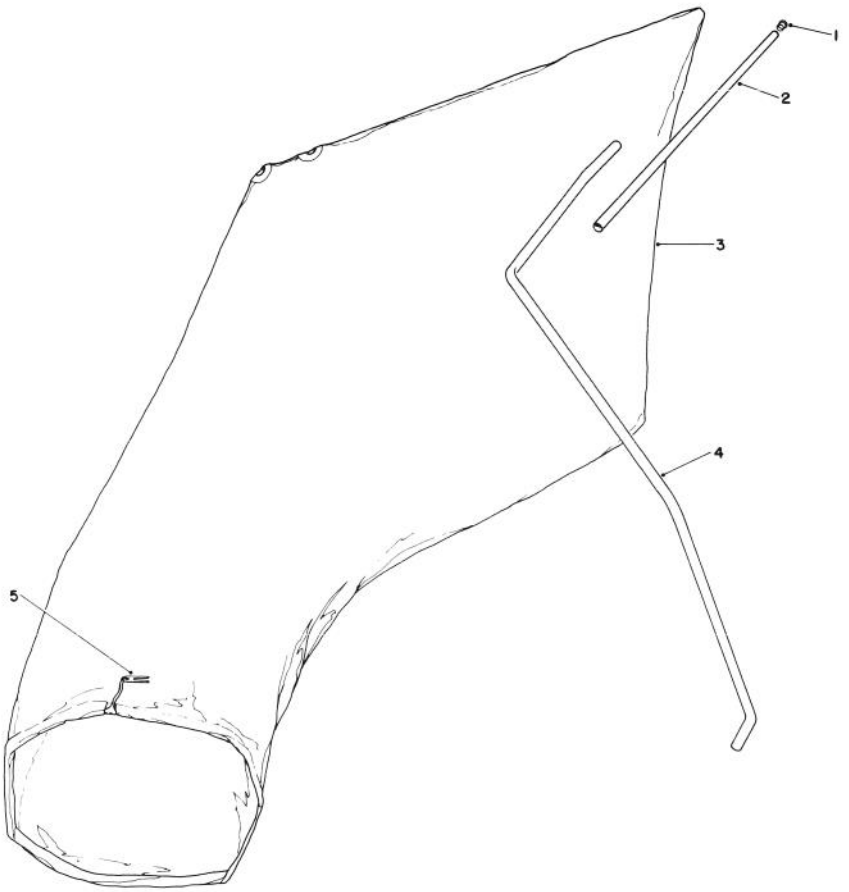

C–0186

GIANT BAGGING KIT NO. 29–9750 (Optional)

Ref. No.	Part No.	Description	No. Used
1	2410–29	Cap	1
2	29–7000	Tube 25"	1
3	8–4719	Bag (Incl. Ref. #5)	1

Ref. No.	Part No.	Description	No. Used
4	22–4820	Hanger Rod	1
5	3–2781	Bag Cord Fasteners	1

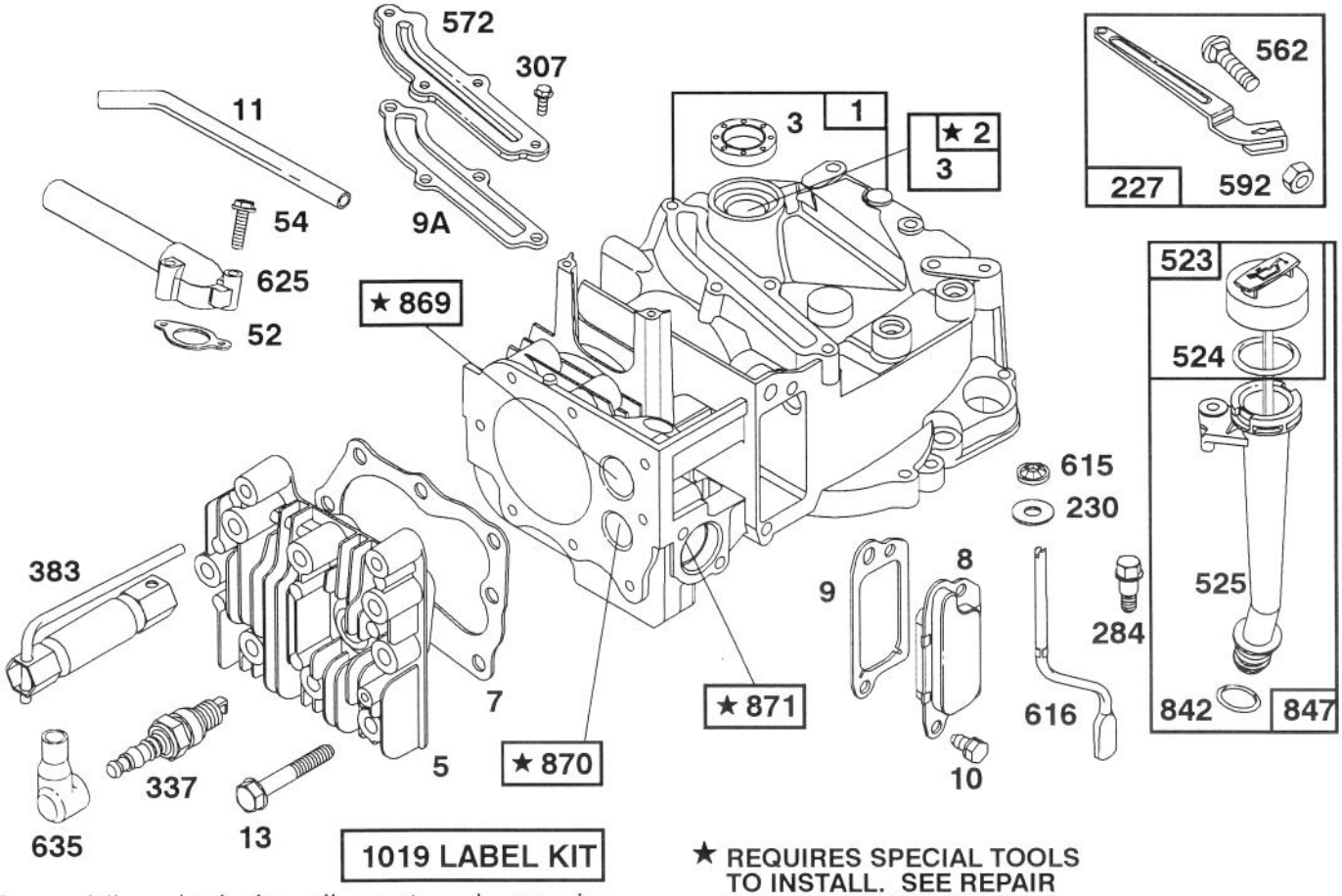

★ REQUIRES SPECIAL TOOLS TO INSTALL. SEE REPAIR INSTRUCTION MANUAL.

Assemblies include all parts shown in frames.

ENGINE BRIGGS & STRATTON MODEL 122702–3171–01

Ref. No.	Part No.	Description	No. Used
1	493260	Cylinder Assembly	1
2	293708	Bushing–Cylinder Note: Requires Special Tools for Installation.	1
★3	393862	Seal–Oil	1
5	213861	Head–Cylinder	1
★7	272200	Gasket–Cylinder Hd.	1
8	399717	Breather–Valve Chamber	1
★9	271904	Gasket–Valve Cover	1
★9A	272238	Gasket–Baffle Plate	1
10	94222	Mounting Sem	1
11	231685	Tube–Breather	1
13	94547	Screw–Cylinder Hd.	1
★52	272199	Gasket–Intake Elbow	1
54	94526	Screw–Intake Elbow Mounting	1
227	492349	Lever Assembly–Gov.	1
230	67072	Washer–Governor Crank	1
284	94511	Screw–Hex. Head	1
307	94515	Screw–Hex. Head	1
337	802592	Plug–Spark	1
383	89838	Wrench–Spark Plug	1

Ref. No.	Part No.	Description	No. Used
523	493950	Cap with Dipstick–Oil Filler	1
524	280393	Seal–Filler Tube	1
525	493952	Tube–Oil Filler	1
562	92613	Bolt–Governor Lever	1
572	224328	Baffle–Cylinder	1
592	231082	Nut–Hex.	1
615	94474	Pushnut (Governor Crank)	1
616	262578	Crank–Governor	1
625	492717	Tube–Fuel Intake	1
635	66538	Elbow–Spark Plug	1
842	280966	Seal–O–Ring	1
847	493459	Oil Fill Tube and Dipstick Assy.	1
869	213512	Seat–Intake Valve	1
870	213513	Seat–Exhaust Valve	11
871	262001	Guide–Exhaust Valve Note:63709 Guide–Intake Valve See Repair Instruction Manual.	1
1019	494256	Label Kit	1

★ Included in Gasket Set– Part No. 493263.

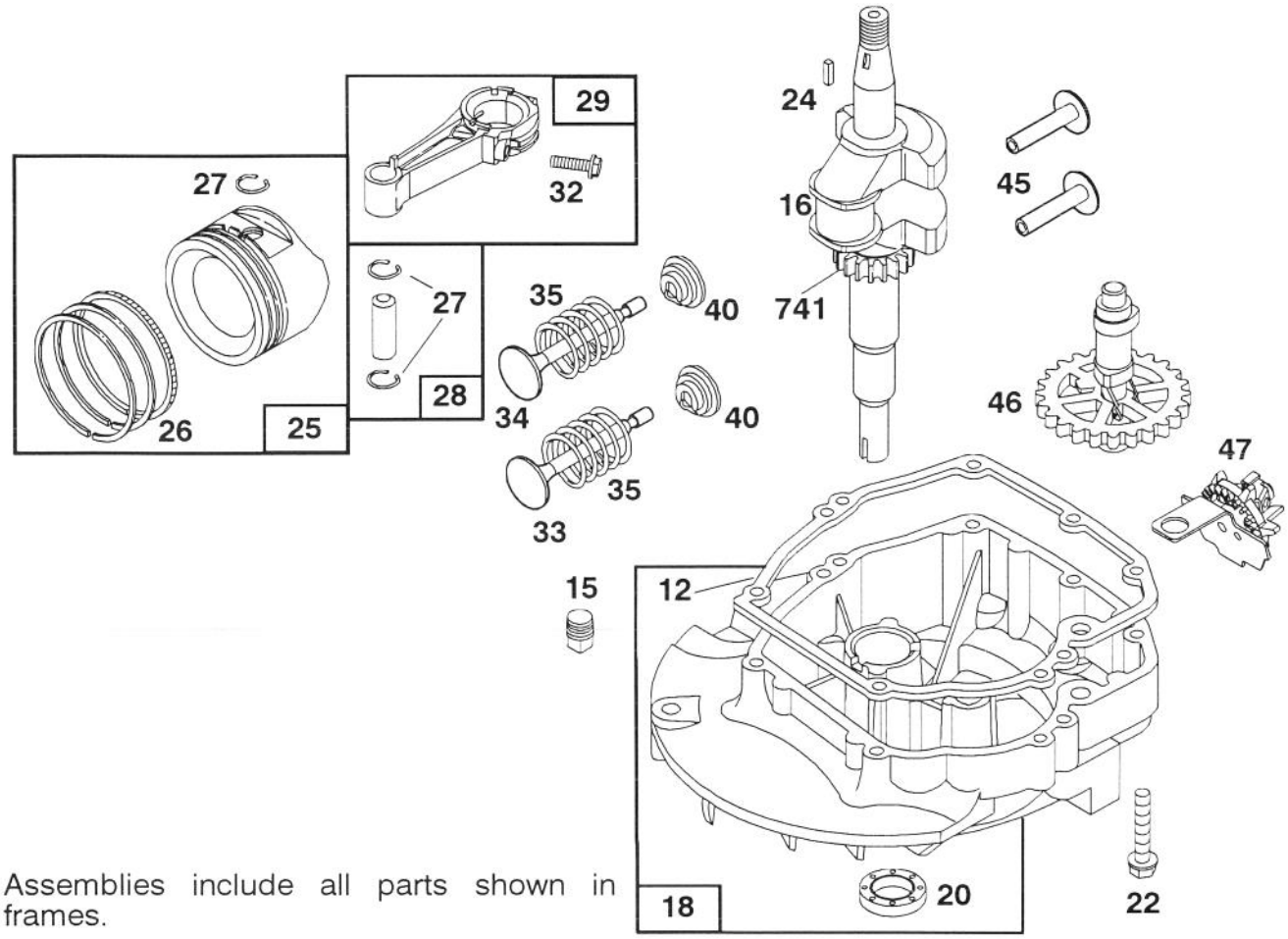

Assemblies include all parts shown in frames.

ENGINE BRIGGS & STRATTON MODEL 122702–3171–01

Ref. No.	Part No.	Description	No. Used
★12	272198	Gasket–Crankcase	1
15	94613	Plug–Oil Drain	1
16	493731	Crankshaft	1
		Note: Order 94388 For Timing Gear Key	1
18	493279	Sump–Engine	1
★20	399781	Seal–Oil	1
22	94220	Screw–Sump Mtg. Sem	1
		Note: 94612 Screw–Hex. Washer Head (One (1) Used in Hole Nearest Breather)	1
24	222698	Key–Flywheel	1
25	493262	Piston Assy.–Standard	1
	493385	Piston Assy.–.010" O.S.	1
	493386	Piston Assy.–.020" O.S.	1
	493387	Piston Assy.–.030" O.S.	1
		PISTON RING SETS:	1
		Note: For Chrome Piston Ring Set–Standard Size–Order Part No. 493391.	1
26	493261	Ring Set–Std. Piston	1
	493388	Ring Set–.010" O.S. Piston	1
	493389	Ring Set–.020" O.S. Piston	1
	493390	Ring Set–.030" O.S. Piston	27
	26026	Lock–Piston Pin	28
	298909	Pin Assembly–Piston–Standard	1
	298908	Pin Assembly–Piston–.005" O.S.	1
29	490566	Rod Assembly– Connecting	1
		Note: For Connecting Rod with .020" Undersize Crankpin Bearing– Order No. 490743.	1
32	94405	Screw–Connecting Rod	1
33	262651	Valve–Exhaust	1
34	262652	Valve–Intake	1
35	262224	Spring–Valve	1
40	93312	Retainer–Valve Spring	1
45	262204	Tappet–Valve	1
46	492828	Gear–Cam	1
47	493737	Oil Slinger Gear and Bracket	1
741	262598	Gear–Timing	1

★ Included in Gasket Set– Part No. 493263.

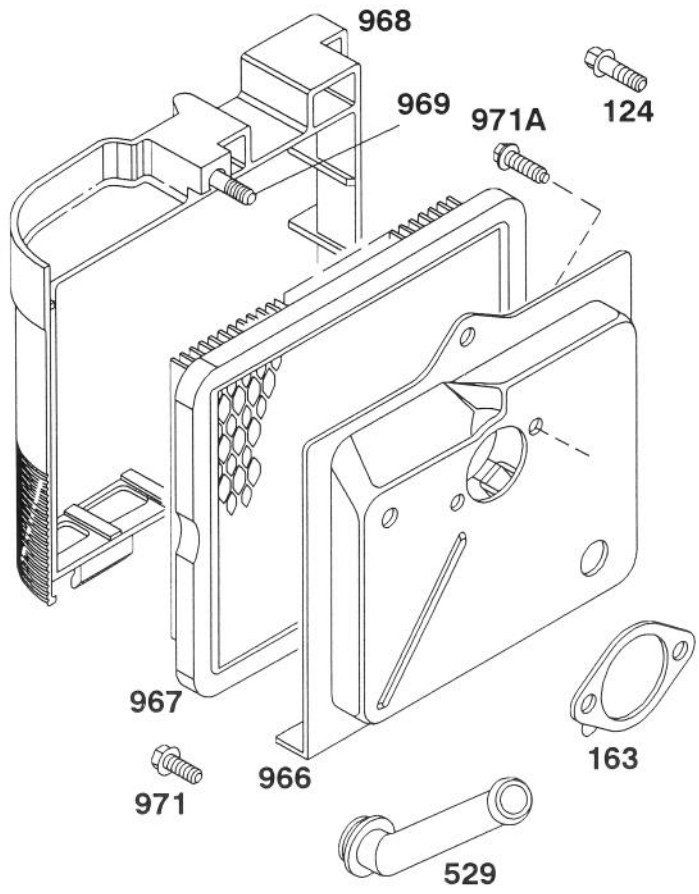

Assemblies include all parts shown in frames.

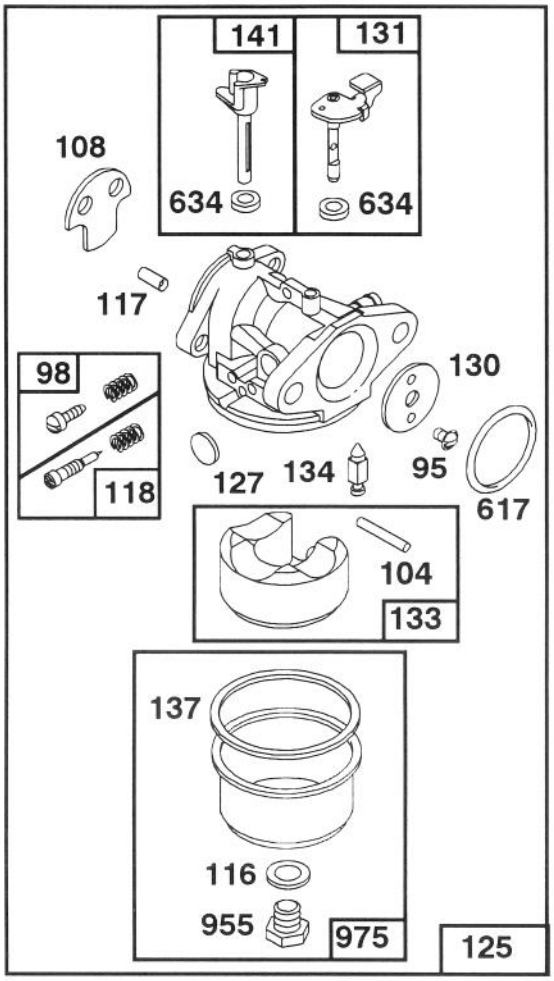

ENGINE BRIGGS & STRATTON MODEL 122702–3171–01

Ref. No.	Part No.	Description	No. Used
95	94098	Screw–Throttle Valve Mounting Sem	1
98	398185	Screw–Idle Adjustment	1
•104	231371	Pin–Float Hinge	1
108	223471	Valve–Choke	1
••◆116		Gasket–Sealing (Sold in Kit Only).	1
•117		Jet (Sold in Kit Only).	1
118	493765	Valve and Spring– Needle	1
124	94525	Screw–Carburetor Mtg.	1
125	494216	Carburetor Assembly	1
•127		Plug–Welch (Sold in Kit Only).	1
130	223470	Valve–Throttle	1
131	493267	Shaft and Lever– Throttle	1
133	398187	Float Assy.–Carburetor	1
•134	398188	Valve–Inlet (Includes Seat)	1

Ref. No.	Part No.	Description	No. Used
••◆137		Gasket–Bowl (Sold in Kit Only).	1
141	494218	Shaft–Choke	1
★163	272296	Gasket–Air Cleaner	1
529	280943	Grommet–Breather	1
••◆617	270344	Seal–Fuel Intake Tube	1
••◆634		Washer–Shaft (Sold in Kit Only)	1
955	493763	Screw–Bowl Mtg.	1
966	492363	Base–Air Cleaner	1
967	491588	Filter–Air	1
968	280937	Cover–Air Cleaner	1
969	94120	Screw–Cover Mtg.	1
971	94269	Screw–Air Cleaner	1
971A	94121	Screw–Base to Carburetor	1
975	493640	Bowl Assy.	1

• Included in Carburetor Overhaul Kit– Part No. 493762.
◆ Included in Carburetor Gasket Set– Part No. 490937.
★ Included on Gasket Set– Part No. 493263.

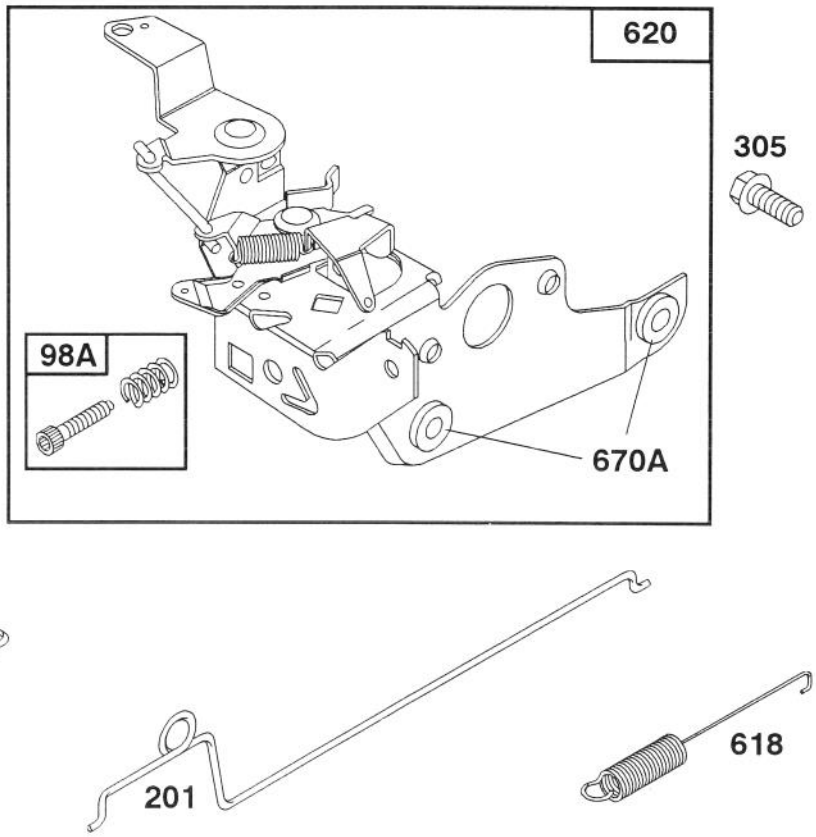

Assemblies include all parts shown in frames.

ENGINE BRIGGS & STRATTON MODEL 122702–3171–01

Ref. No.	Part No.	Description	No. Used
98A	493280	Screw Assy.– Speed Adj.	1
201	262579	Link–Governor	1
209	262661	Spring–Governor	1
305	94513	Screw–Hex. Head Sem	

Ref. No.	Part No.	Description	No. Used
618	262749	Spring–Choke Return	1
620	493894	Bracket Assembly– Carburetor Control	1
670A	493823	Spacer–Carburetor Bracket	1

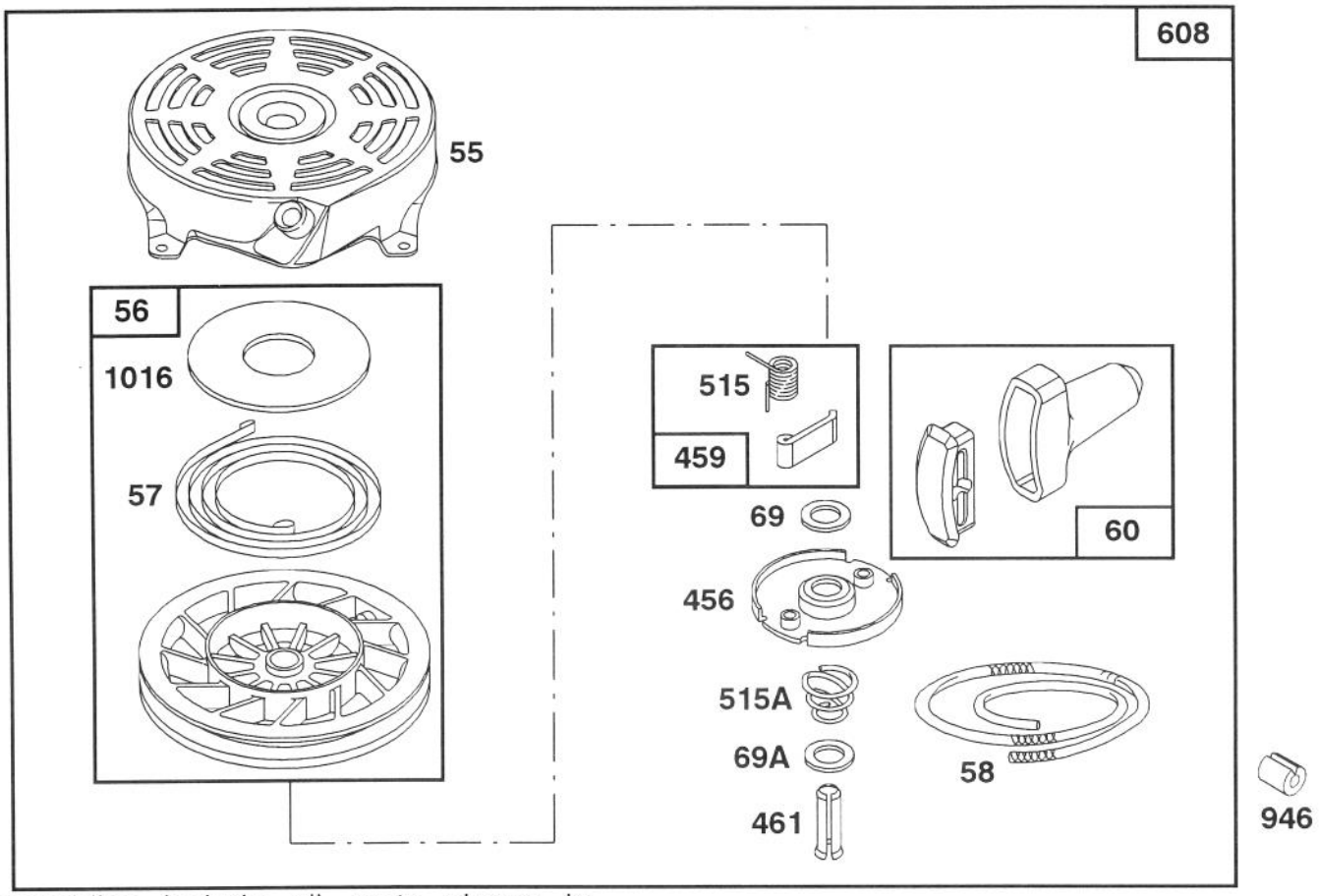

Assemblies include all parts shown in frames.

ENGINE BRIGGS & STRATTON MODEL 122702–3171–01

Ref. No.	Part No.	Description	No. Used
55	492831	Housing–Rewind Starter	1
56	492832	Pulley–Rewind Starter	1
57	262594	Spring–Rewind Starter	1
58	280399	Rope–Rewind Starter	1
60	393152	Handle–Rewind Starter	1
69	280973	Washer–Rewind Starter	1
69A	224322	Washer–Rewind Starter	1
456	224321	Retainer–Rewind Starter	1

Ref. No.	Part No.	Description	No. Used
459	492833	Pawl–Starter	1
461	262626	Pin–Starter	1
515	262556	Spring–Pawl	1
515A	262625	Spring–Torsion	1
608	493295	Starter Assy.–Rewind	1
946	223294	Stop Rope	1
1016	224278	Cover–Rewind Starter	1

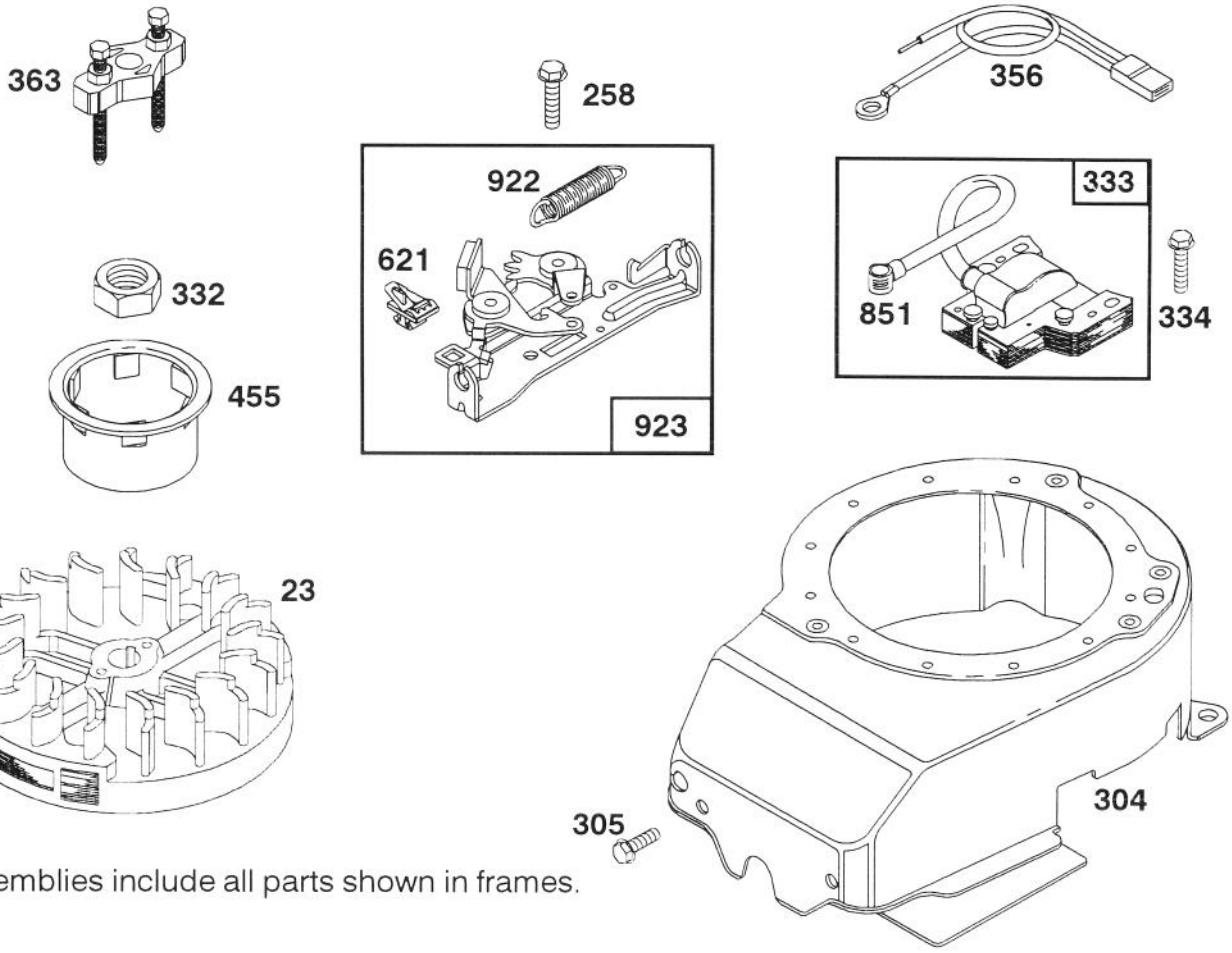

Assemblies include all parts shown in frames.

ENGINE BRIGGS & STRATTON MODEL 122702–3171–01

Ref. No.	Part No.	Description	No. Used
23	492177	Flywheel–Magneto	1
258	94512	Screw–Hex. Hd.	1
304	493293	Housing– Blower	1
305	94513	Screw–Hex. Head Sem	1
332	92284	Nut–Flywheel	1
333	802574	Armature–Magneto	1
334	93381	Screw–Armature Mounting Sem	1

Ref. No.	Part No.	Description	No. Used
356	398808	Wire–Ground	1
363	19069	Puller–Flywheel (Optional Accessory)	1
455	224250	Cup–Starter	1
621	396847	Switch–Stop	1
851	221798	Terminal–Ignition Cable	1
922	262640	Spring–Brake	1
923	492918	Brake Assy.	1

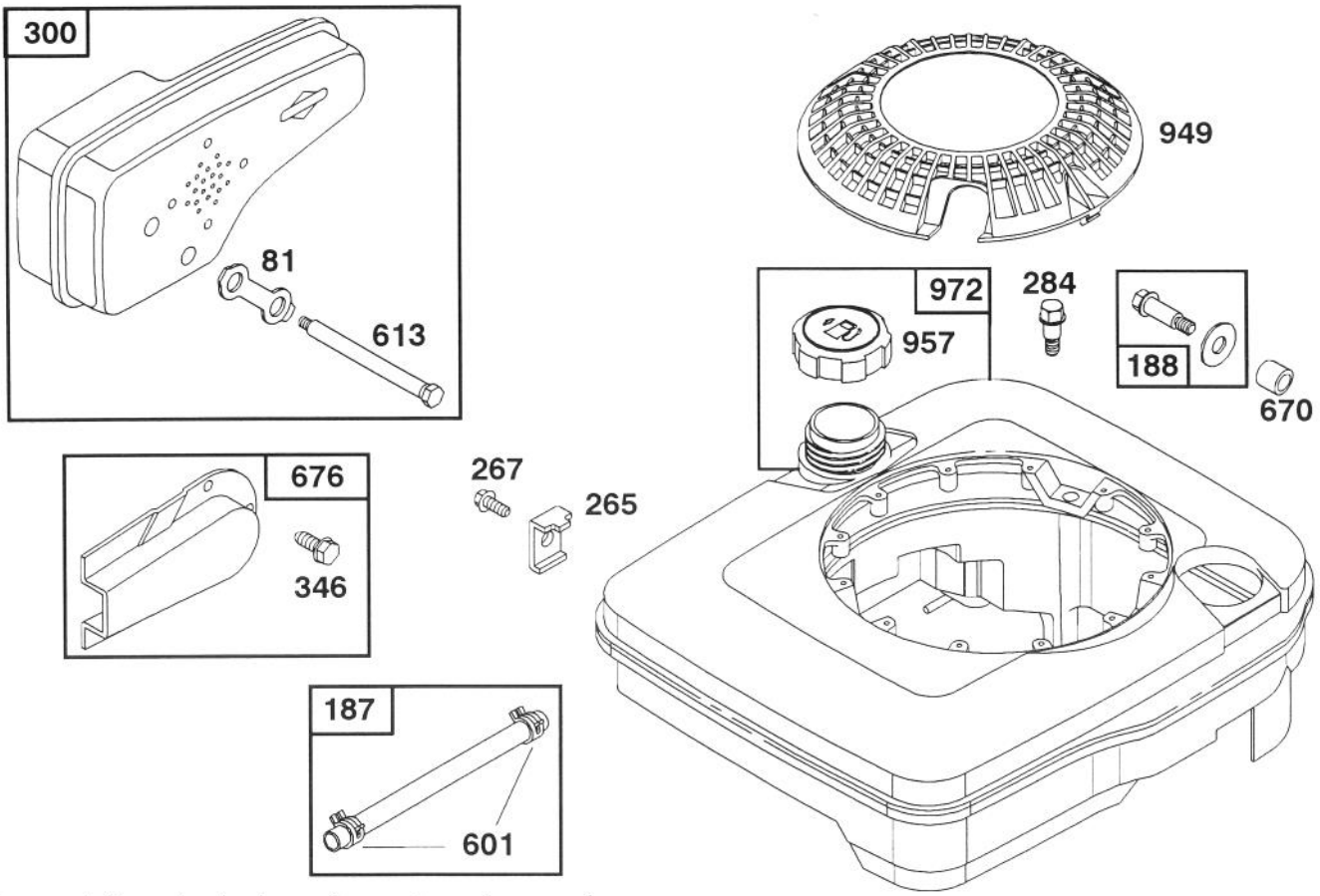

Assemblies include all parts shown in frames.

ENGINE BRIGGS & STRATTON MODEL 122702–3171–01

Ref. No.	Part No.	Description	No. Used
81	223664	Lock–Muffler Screw	1
187	492790	Hose–Fuel	1
188	398540	Screw–Tank Mounting (Includes Washer)	1
265	221535	Clamp–Casing	1
267	94204	Screw–Clamp Mtg.	1
284	94511	Screw–Hex. Head	1
300	490547	Muffler–Exhaust	1

Ref. No.	Part No.	Description	No. Used
346	93705	Screw–Hex. Head	1
601	93807	Clamp–Hose	1
613	94231	Screw–Muffler Mtg.	1
670	280512	Spacer–Fuel Tank	1
676	493871	Deflector–Muffler	1
949	281136	Screen–Static	1
957	397974	Cap Assy.–Fuel	1
972	494358	Tank Assembly–Fuel	1

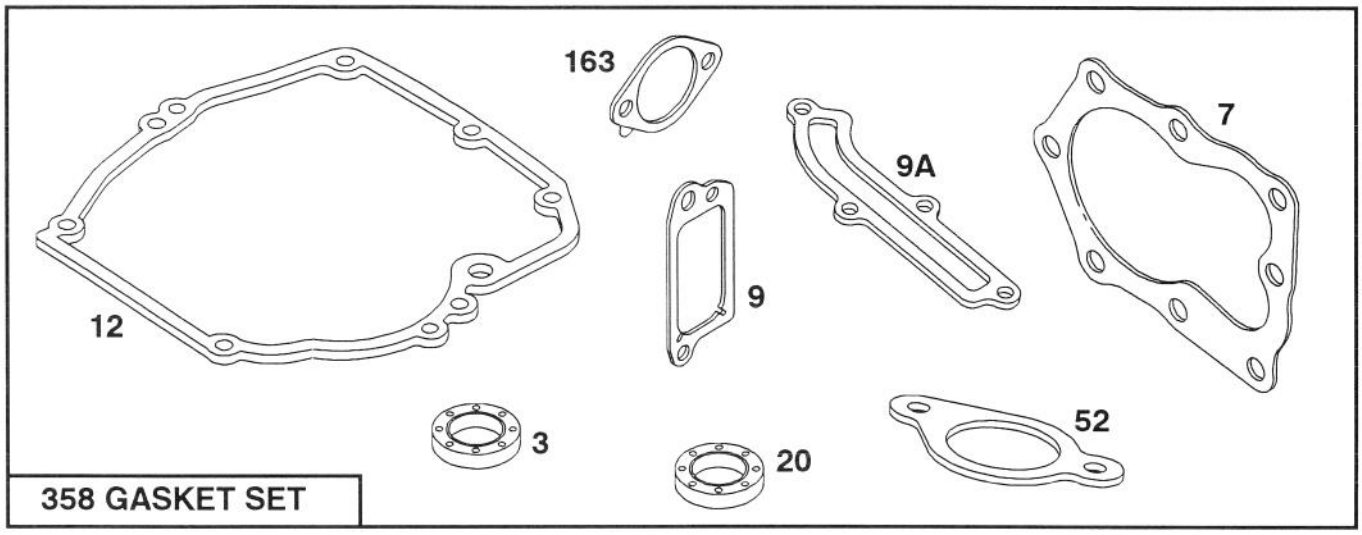

358 GASKET SET

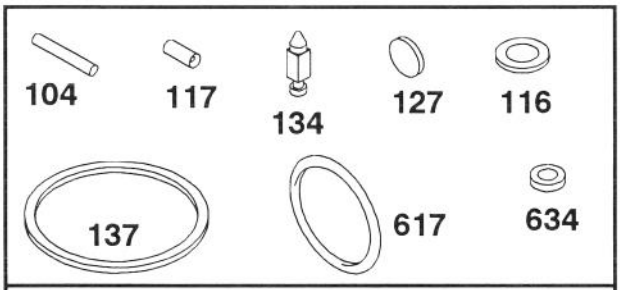

121 CARBURETOR OVERHAUL KIT

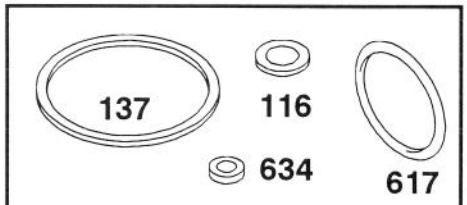

977 CARBURETOR GASKET SET

Assemblies include all parts shown in frames.

ENGINE BRIGGS & STRATTON MODEL 122702–3171–01

Ref. No.	Part No.	Description	No. Used
★3	393862	Seal–Oil	1
★7	272200	Gasket–Cylinder Hd.	1
★9	271904	Gasket–Valve Cover	1
★9A	272238	Gasket–Baffle Plate	1
★12	272198	Gasket–Crankcase	1
★20	399781	Seal–Oil	1
★52	272199	Gasket–Intake Elbow	1
•104	231371	Pin–Float Hinge	1
•◆116		Gasket–Sealing	
		(Sold in Kit Only).	1
•117		Jet	
		(Sold in Kit Only).	1
121	493762	Carburetor Overhaul Kit	1

Ref. No.	Part No.	Description	No. Used
•127		Plug–Welch	
		(Sold in Kit Only).	1
•134	398188	Valve–Inlet	
		(Includes Seat)	1
•◆137		Gasket–Bowl	
		(Sold in Kit Only).	1
★163	272296	Gasket–Air Cleaner	1
358	493263	Gasket Set	1
•◆617	270344	Seal–Fuel Intake Tube	1
•◆634		Washer–Shaft	
		(Sold in Kit Only)	1
977	490937	Gasket Set–Carburetor	1

• Included in Carburator Overhaul Kit– Part No. 493762.
◆ Included in Carburetor Gasket Set– Part No. 490937.
★ Included in Gasket Set– Part No. 493263.