FORM NO. 3314-679 REV. A

TORO®

MODEL NO. 20320-2000001 & UP

PARTS CATALOG

21" RECYCLER®
Mower

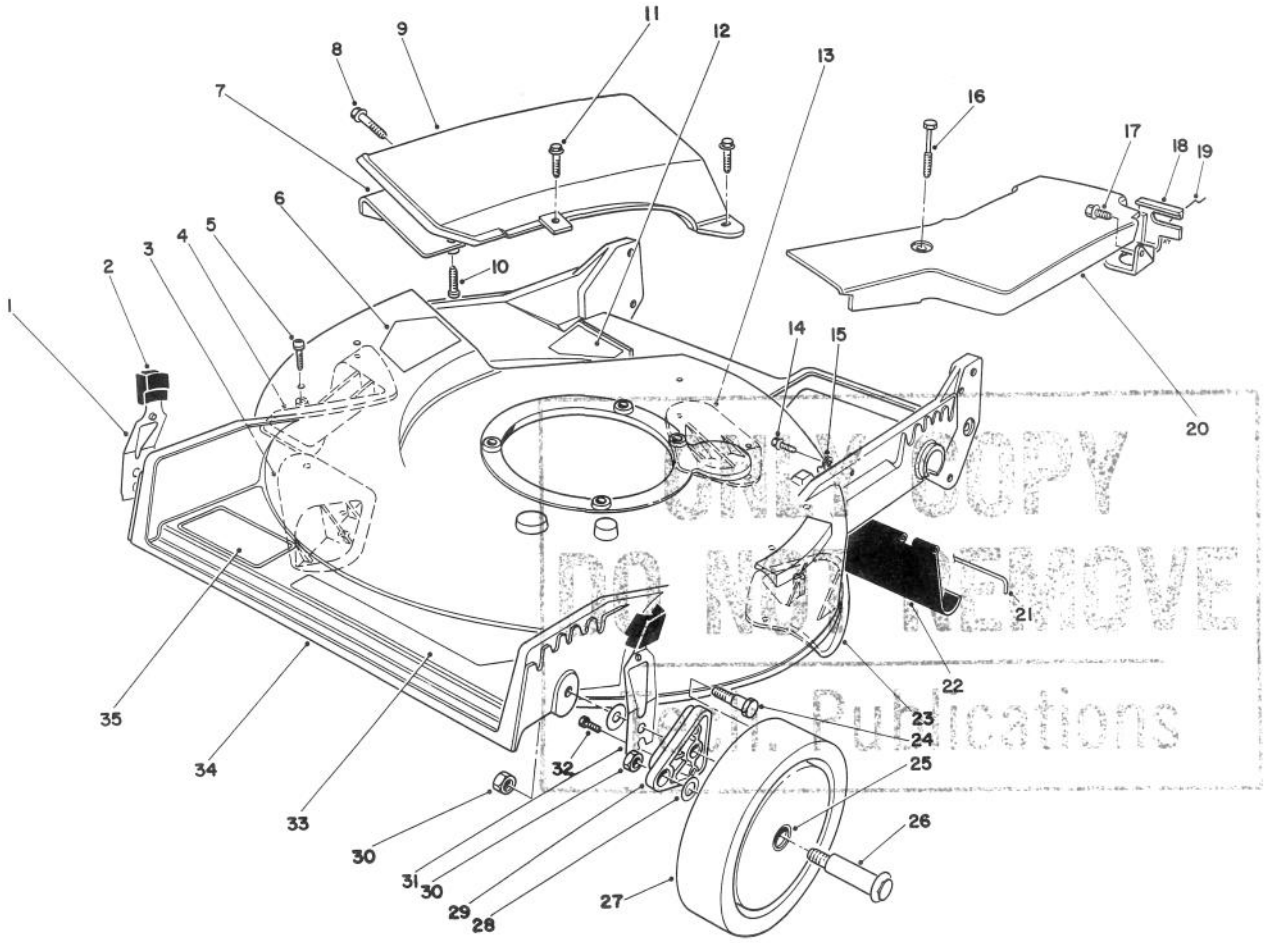

ONE COPY
DO NOT REMOVE
Publications

C-0809

HOUSING ASSEMBLY

Ref. No.	Part No.	Description	No. Used
1	71-0560	Spring Arm Ass'y R.H.	1
2	25-7740	Knob - Arm	2
3	76-2120	Plate - Kicker R.H. Front	1
4	76-2130	Plate - Kicker L.H. Front	1
5	32104-130	Screw - Plastite	8
6	39-5770	Decal - Danger	1
7		Deflector - Recycler	1
8	46-6810	Screw & Washer Ass'y	1
9	14-4069	Cover Assembly (Incl. Ref. #7 & 10)	1
10		Screw - Plastite	5
11	46-6811	Screw - Thread Forming	3
12	82-8450	Decal - Danger	1
13	76-2150	Plate - Kicker L.H. Rear	1
14	12-5450	Screw - Hex Washer Hd.	1

Ref. No.	Part No.	Description	No. Used
15	2412-83	R-Clamp	1
16	37-7260	Screw - Special	2
17	32144-70	Screw - Thread Forming	2
18	82-5680	Bracket - Traction Adj.	1
19	46-7030	Retainer - Cable	1
20	82-9911	Cover - Belt	1
21	33-3208	Rod - Shield	1
22	44-0580	Shield - Trailing	1
23	76-2140	Plate - Kicker R.H. Rear	1
24	66-0561	Screw - Pivot	2
25	27-6250	Bushing	4
26	27-6231	Bolt - Wheel	2
27	11-9509	Wheel & Tire Assembly (Incl. Ref. #26)	2
28	40-1940	Washer - Wheel Bolt	4

TPS

©The TORO Company - 1991 Revised 1991

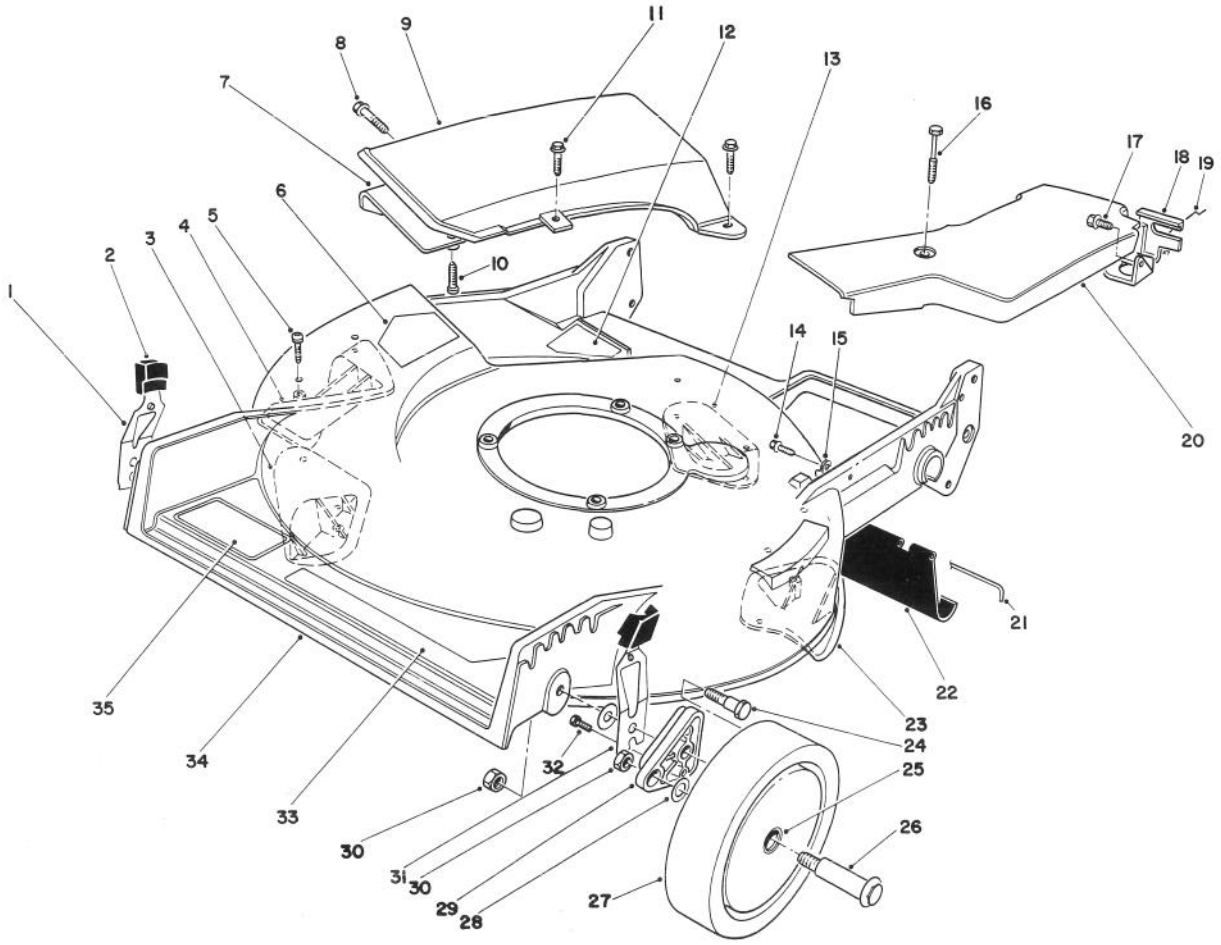

C-0809

HOUSING ASSEMBLY (CONTINUED)

Ref. No.	Part No.	Description	No. Used
29	66-0580	Arm - Pivot	2
30	52-3620	Nut - Lock	4
31	71-0570	Spring Arm Ass'y L.H.	1
32	32144-85	Screw - Thread Forming	2
33	76-1950	Decal - Recycler	1

Ref. No.	Part No.	Description	No. Used
34	14-3519	Housing Assembly (Incl. Ref. #3-6, 12, 13, & 23)	1
35	71-0600	Decal - Toro	1

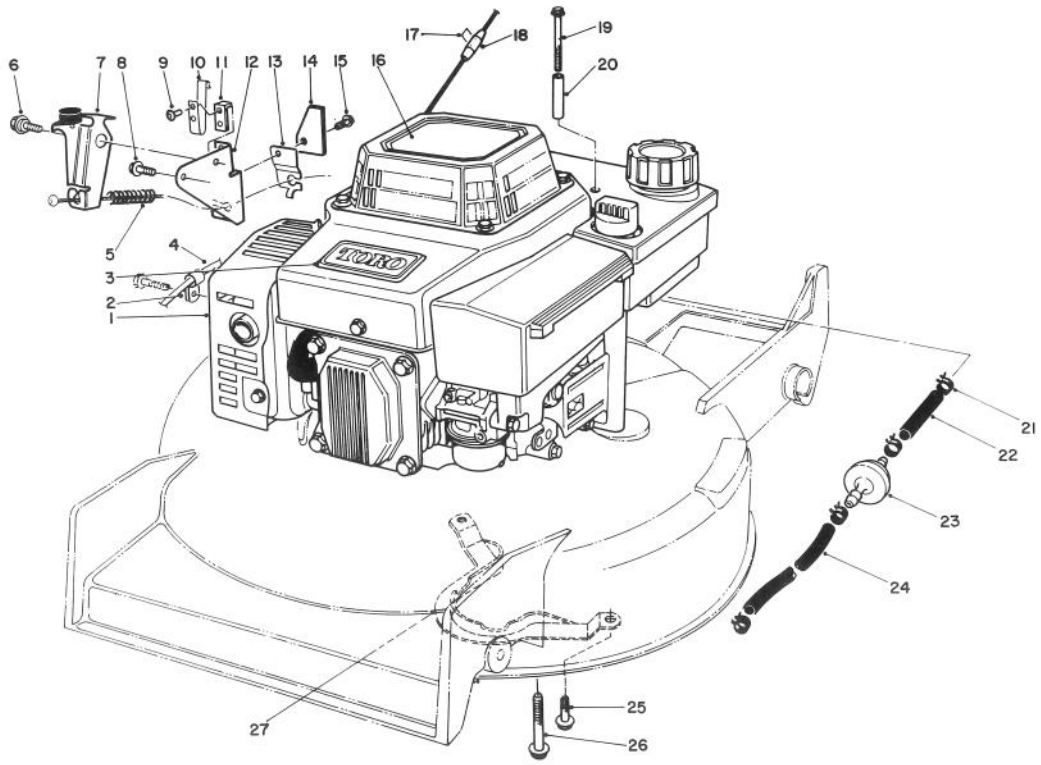

C-0810

ENGINE ASSEMBLY

Ref. No.	Part No.	Description	No. Used
1	72-4144	Engine	1
2	2412-72	R-Clamp	1
3	46-8290	Plate - Toro	1
4	55-7901	Wire Ass'y - Kill	1
5	66-5370	Spring - Compression	1
6	56-6190	Screw - Shoulder	1
7	66-5380	Brake Plate Assembly	1
8	46-0790	Screw - Self Tapping	1
9	3290-459	Rivet	2
10	60-9010	Strap - Ground	1
11	77-5260	Strap - Insulation	1
12	53-4620	Plate - Mounting	1
13	53-4610	Clamp - Cable	1
14	53-4690	Stop - Ground Strap	1
15	12-5450	Screw - Self Tapping	1
16	66-0490	Decal - Recoil	1

Ref. No.	Part No.	Description	No. Used
†17		Staple	1
18	81-3980	Stop - Rope	1
19	56-6610	Screw - Thread Forming Hex Washer Hd.	2
20	57-3830	Spacer - Tubular	2
21	2412-95	Clamp - Fuel Line	4
22	51-3211	Line - Fuel	1
23	56-6360	Filter - Fuel	1
24	51-3214	Line - Fuel	1
25	32144-70	Screw - Thread Forming	2
26	11-0590	Screw - Thread Forming	3
27	66-0570	Guide - Belt	1
*	12-4599	Mounting Plate Assembly (Incl Ref. #9-12)	
*	75-9850	Tube - Oil Drain	1

*Not Illustrated
†Obtain Locally

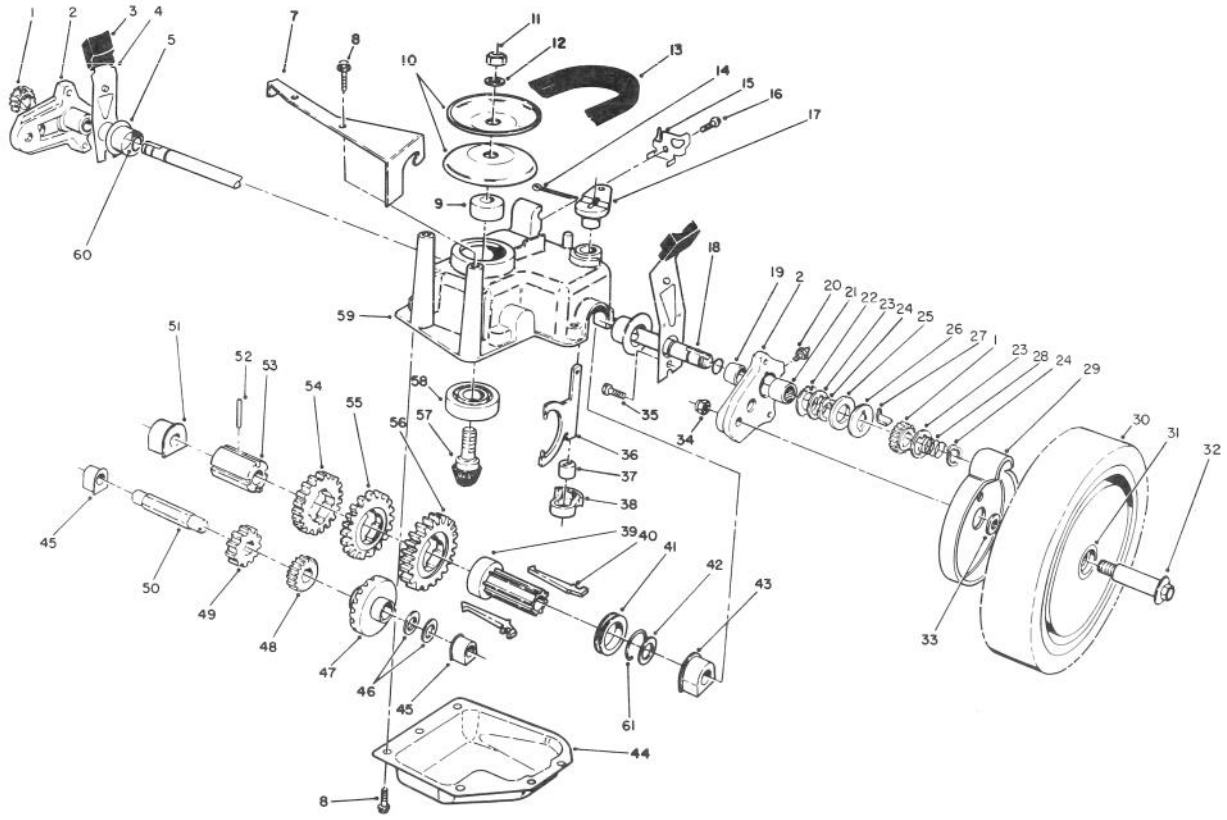

C-0521

GEAR CASE ASSEMBLY

Ref. No.	Part No.	Description	No. Used
1	65-4750	Pinion	2
2	63-8701	Pivot Arm Assembly (Incl. Ref # 19, 20, & 21)	2
3	25-7740	Knob - Arm	2
4	63-8720	Spring Arm Assembly	2
5	42-3520	End Cap	2
7	62-4320	Bracket - Belt Guide	1
8	49-2040	Screw - Self Tapping	8
9	62-6660	Spacer	1
10	60-8840	Pulley - Half	2
11	3296-5	Locknut	1
12	3256-24	Washer - Flat	1
13	62-3900	V-Belt	1
14	3272-10	Pin - Cotter	1
15	82-8780	Cable - Retainer	1
16	32144-70	Screw - Thread Forming	1
17	60-8821	Lever - Shift	1
18	65-4770	Shaft - Output	1
19	70-9760	Bushing	2
20	302-56	Fitting - Grease	2
21	48-2060	Needle Bearing	2
22	65-4730	Thrust Washer	2
23	65-4740	Thrust Washer	4
24	65-2720	Ring - Retaining	4
25	65-4710	Ring - Friction	2

Ref. No.	Part No.	Description	No. Used
26	65-4760	Washer - Clutch	2
27	66-6050	Key - Rocker L.H.	1
*	66-6040	Key - Rocker R.H.	1
28	65-4720	Spring	2
29	74-1660	Cover - Wheel	2
30	11-9519	Wheel - Tire & Gear Ass'y (Incl. Ref. # 31)	2
31	27-6250	Bushing - Wheel	4
32	27-6231	Wheel Bolt	2
33	74-1671	Spacer - Wheel Cover	2
34	52-3620	Locknut	2
35	32144-85	Screw	2
36	60-8870	Yoke - Shift	1
37	29-9570	Bushing - Yoke	1
38	60-8810	Retainer - Shift Fork	1
39	76-0780	Sleeve - Shift Key	1
40	76-0760	Key - Shift	2
41	76-0770	Collar - Shift	1
42	36-4780	Washer - Thrust	1
43	60-8770	Bushing - Output Shaft	1
44	60-8730	Cover - Gear Case	1
45	60-8750	Bushing - Int. Shaft	2
46	36-4791	Washer - Thrust	2
47	55-3760	Gear - Pinion 15 Tooth	1
48	55-3780	Gear - Pinion 20 Tooth	1

*Not Illustrated

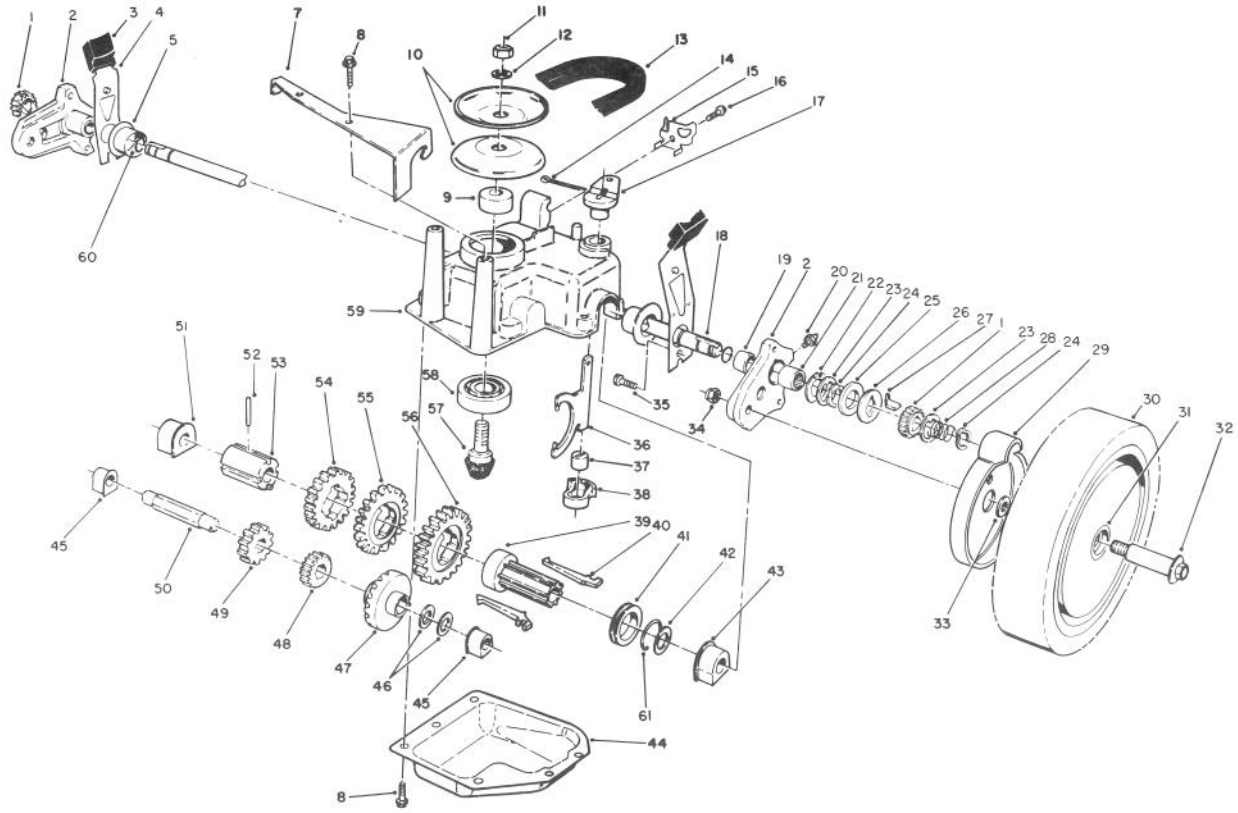

C-0521

GEAR CASE ASSEMBLY (CONTINUED)

Ref. No.	Part No.	Description	No. Used
49	55-3800	Gear - Pinion	1
50	60-8800	Shaft - Intermediate	1
51	60-8850	Bushing - Output Shaft	1
52	32121-120	Pin - Coil	1
53	60-8790	Sleeve - Gear	1
54	55-3810	Gear - 39 Tooth 3rd Gear	1
55	55-3790	Gear - 44 Tooth 2nd Gear	1

Ref. No.	Part No.	Description	No. Used
56	55-3770	Gear - 49 Tooth 1st Gear	1
57	60-8890	Pinion - Bevel	1
58	38-7820	Bearing - Ball	1
59	60-8710	Gear Case - Upper	1
60	237-153	O-Ring	2
61	65-5250	Clip - Spring	1
*	62-6673	Gear Case Assembly	1

*Not Illustrated

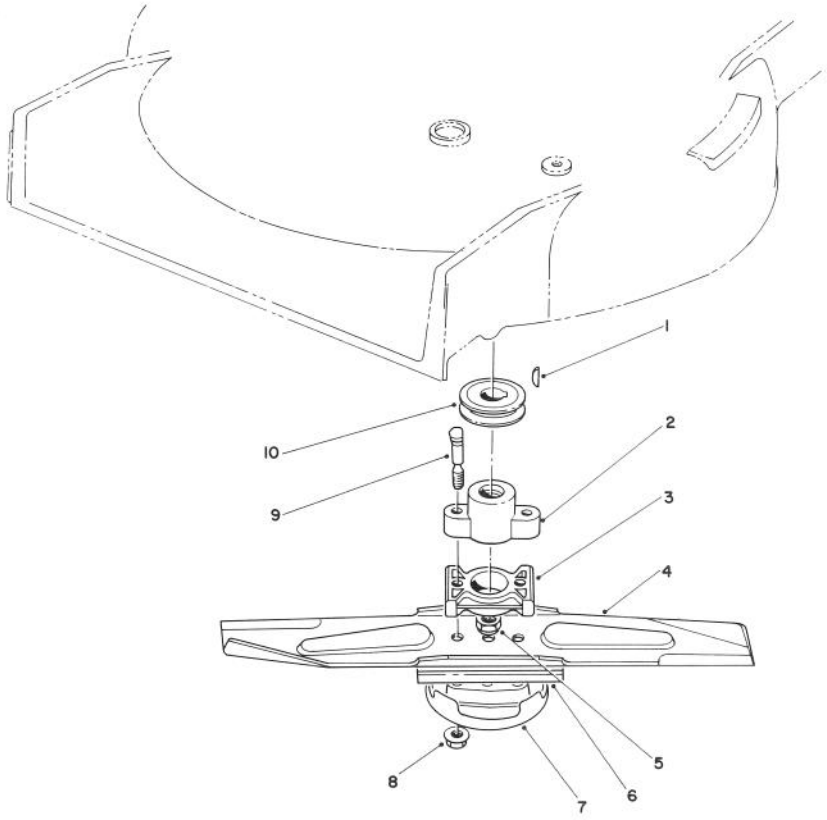

C-0811

BLADE ASSEMBLY

Ref. No.	Part No.	Description	No. Used
1	3257-3	Key - Woodruff	1
2	62-5920	Hub - Adapter	1
3	62-4280	Spacer - Blade	1
4	14-1659	Blade - 21" (Incl. Ref. #6)	1
5	3296-33	Locknut	1

Ref. No.	Part No.	Description	No. Used
6	80-0510	Stiffener - Blade	1
7	80-2770	Cup - Anti-Scalp	1
8	54-9190	Locknut	2
9	42-3190	Bolt - Blade	2
10	62-7560	Pulley Driver	1

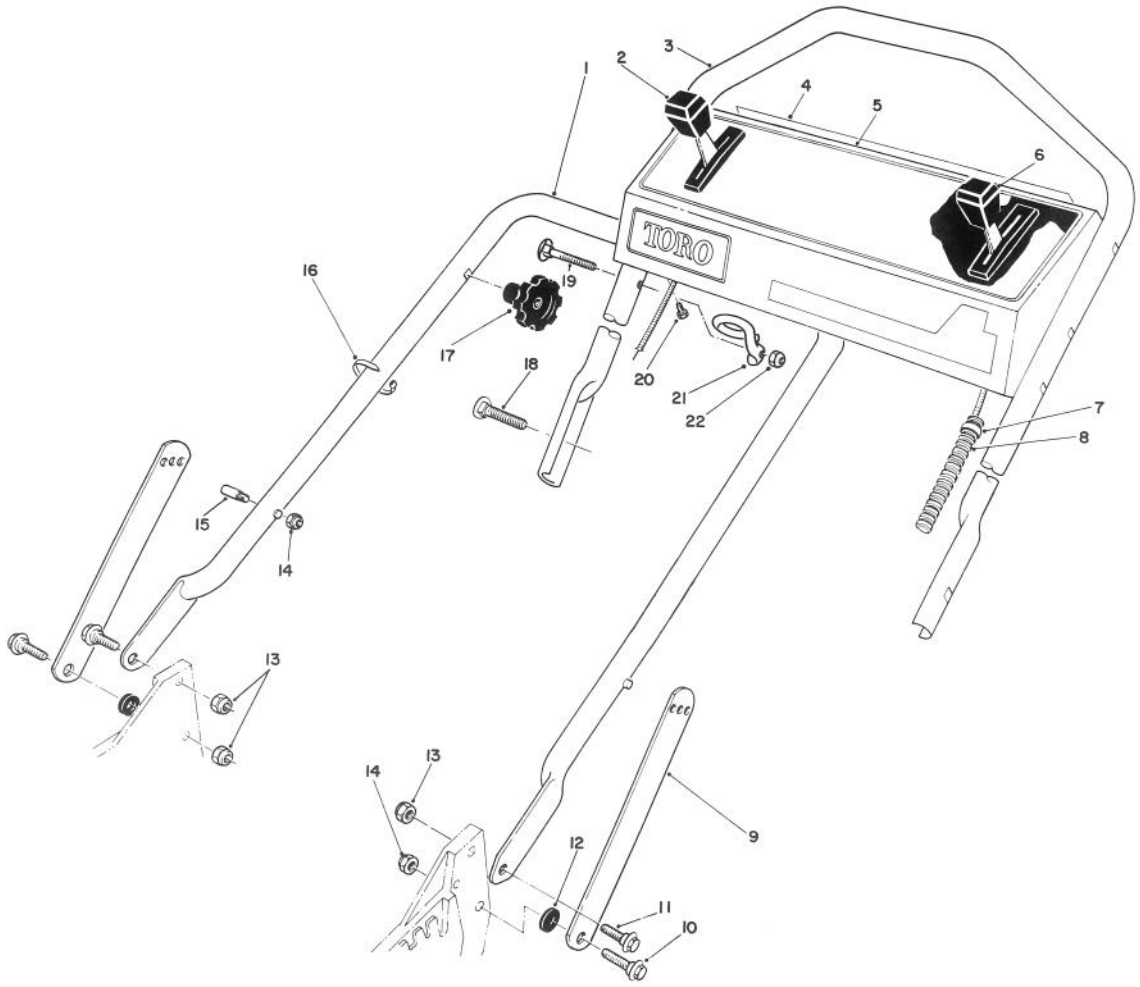

C-0812

HANDLE ASSEMBLY

Ref. No.	Part No.	Description	No. Used
1	82-5530	Lower Handle Ass'y	1
2	76-2711	Control - Ground Speed (Bend Type #1) (Sheath Lg. 41 3/4") (Wire Lg. 2 1/2")	1
3	46-5410	Handle - Upper	1
4	63-9060	Decal - Danger	1
5	14-4089	Panel - Control (Incl. Ref. #4)	1
6	49-4197	Control - Throttle (Bend Type #5) (Sheath Lg. 55 7/8") (Wlire Lg. 2 3/8")	1
7	2412-50	Clip Convoluted Tubing	4
8	46-6440	Cover - Control Cable	1

Ref. No.	Part No.	Description	No. Used
9	43-1370	Latch - Handle	2
10	27-7210	Screw - Shoulder	2
11	27-7211	Screw - Shoulder	2
12	3-3287	Spacer - Handle Latch	2
13	3296-29	Nut - Lock	3
14	3296-47	Nut - Lock	3
†15	49-2750	Pin - Handle	2
16	3290-378	Tie - Cable	2
17	19-4050	Knob - Handle Release	1
18	17-9421	Screw - Handle	2
19	46-6433	Screw - Handle	1
20	32104-76	Screw - Tapping	4
21	46-8080	Guide - Rope	1
22	3296-42	Nut - Lock	1

†Service Replacement Part

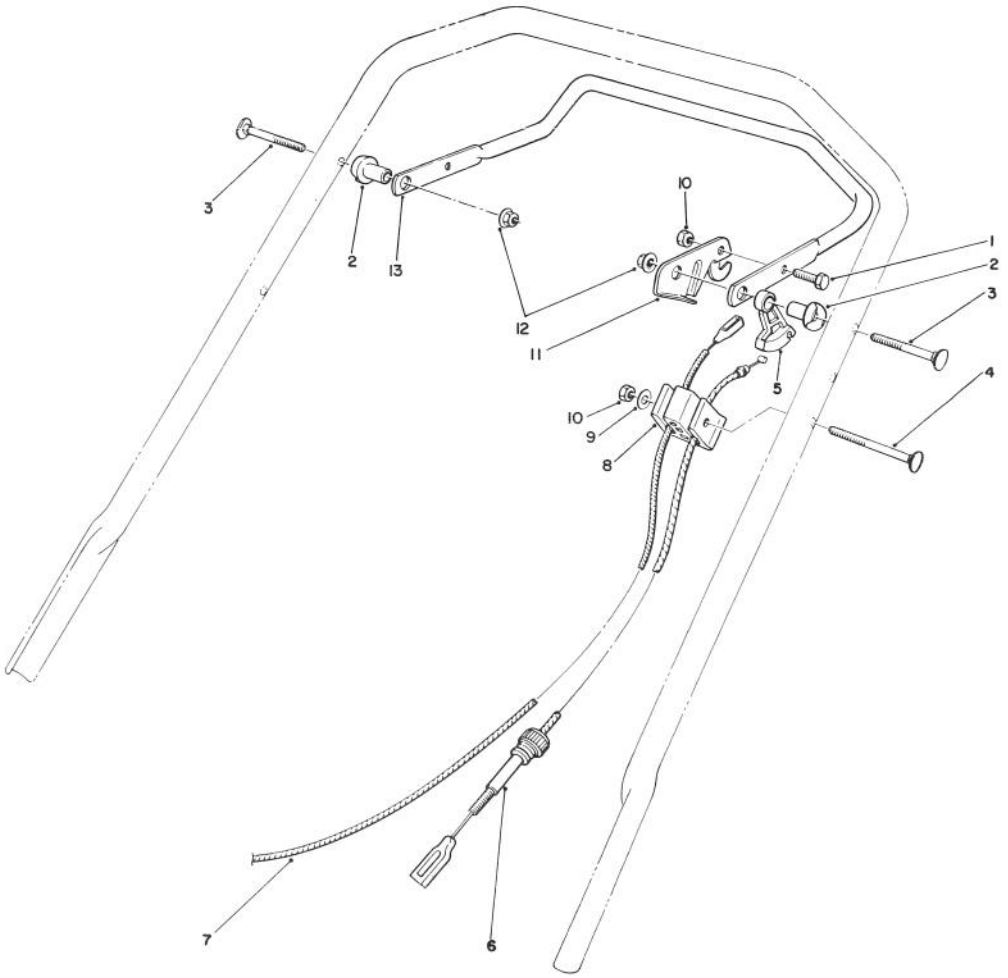

C-0813

TRACTION CONTROL ASSEMBLY

Ref. No.	Part No.	Description	No. Used
1	321-3	Screw - Hex Hd. Cap	1
2	49-1630	Support - Spacer	2
3	17-9421	Screw - Handle	2
4	46-6434	Screw - Handle	1
5	46-5520	Lever - Traction	1
6	46-5481	Cable - Traction	1
7	56-6090	Cable - Brake	1

Ref. No.	Part No.	Description	No. Used
8	46-6980	Support - Cable	1
9	3256-22	Washer - Flat	1
10	3296-42	Nut - Lock	2
11	66-5350	Lever - Control	1
12	3296-58	Nut - Lock	2
13	52-7430	Bar - Control	1

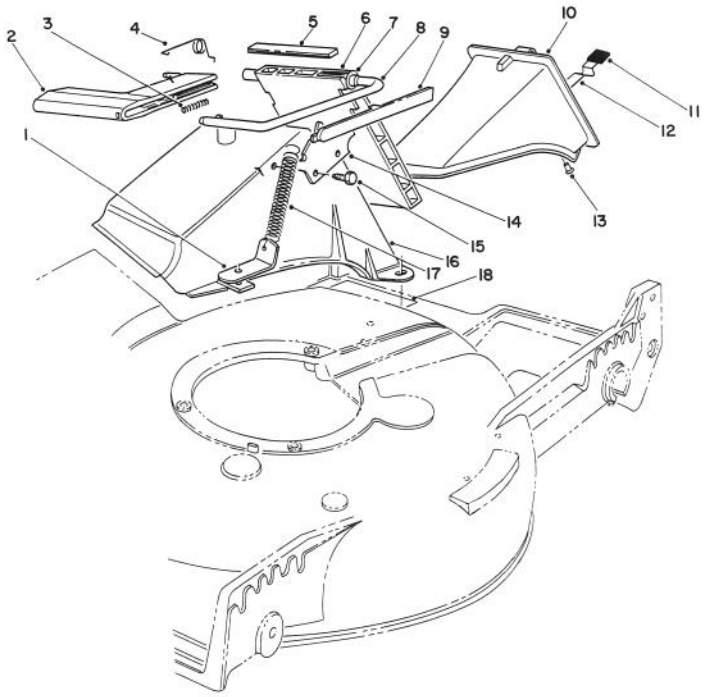

C-0730

RECYCLER BAGGING KIT MODEL NO. 59174

Ref. No.	Part No.	Description	No. Used
1	80-3780	Bracket - Spring	1
2	46-3520	Handle - Door	1
3	46-7060	Spring - Compression	1
4	80-3770	Retainer - Door	1
5	46-6821	Cover - Door	1
6	46-3511	Door - Discharge	1
7	23-0880	Bushing	1
8	76-4580	Rod - Door	1
9	49-4170	Cover - Handle	1
10	77-0500	Plug - Assembly (Incl. Ref. #11-13)	1
11	76-4650	Grip - Latch	1

Ref. No.	Part No.	Description	No. Used
12	76-4640	Latch - Plug	1
13	3295-35	Rivet	1
14	76-4570	Plate - Latch	1
15	46-8090	Screw - Hex Washer Hd. Self Tapping	2
16	82-9150	Tunnel - Discharge	1
17	76-4660	Spring - Door	1
18	82-7960	Decal	1
*	77-0200	Discharge Door Assembly (Incl. Ref. #2, 3, & 5-9)	1

*Not Illustrated

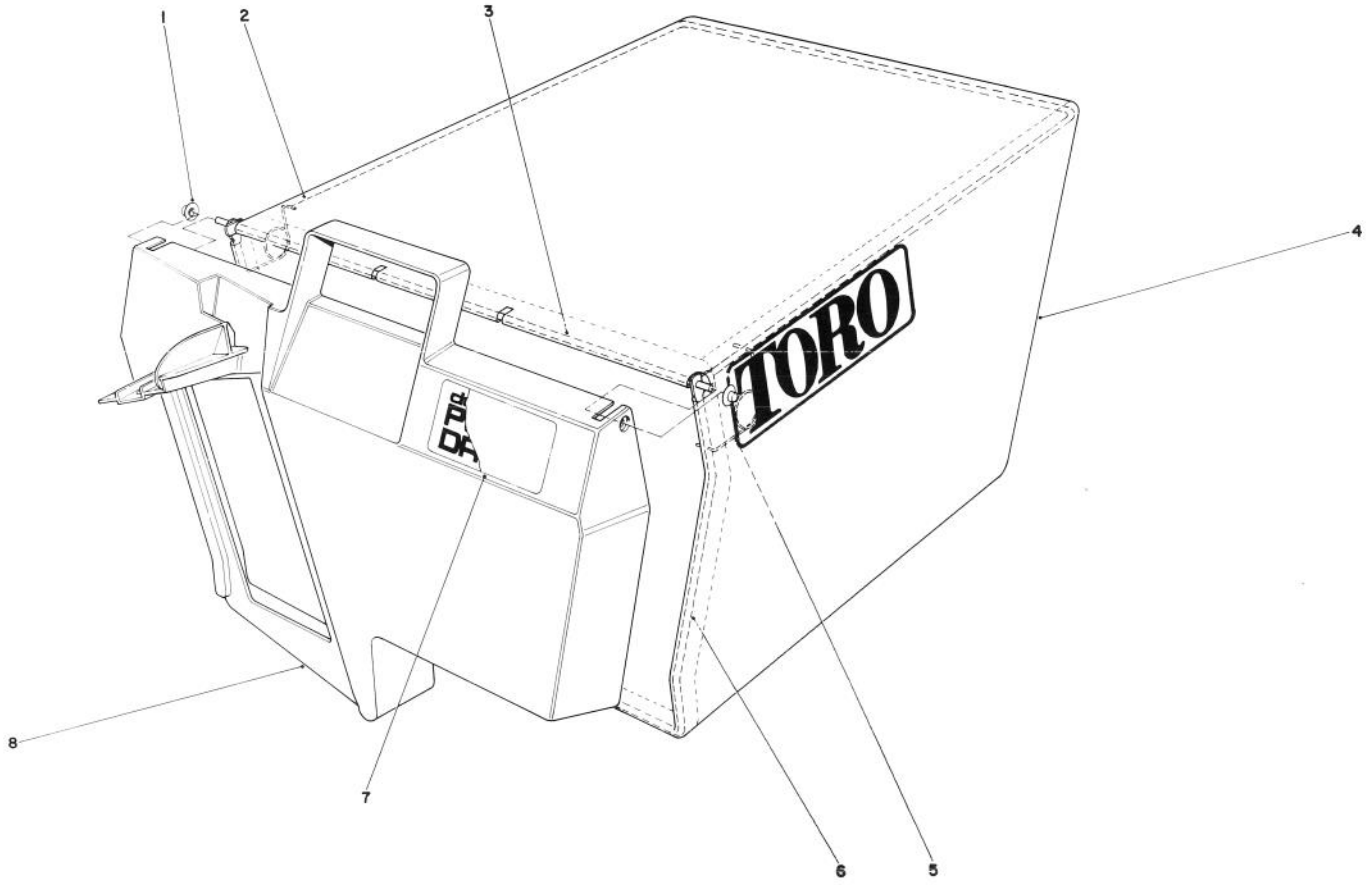

C-0331

RECYCLER BAGGING KIT MODEL NO. 59174 (CONTINUED) (OPTIONAL)

Ref. No.	Part No.	Description	No. Used
1	3290-422	Nut - Push	2
2	42-4030	Bag Frame - Upper	1
3	33-4820	Hing - Bag Door	1
4	44-0522	Bag - Grass	1

Ref. No.	Part No.	Description	No. Used
5	36-6910	Spring	2
6	42-4020	Frame - Bag	1
7	66-2150	Decal - Bag Door	1
8	37-1393	Door - Grass Bag	1

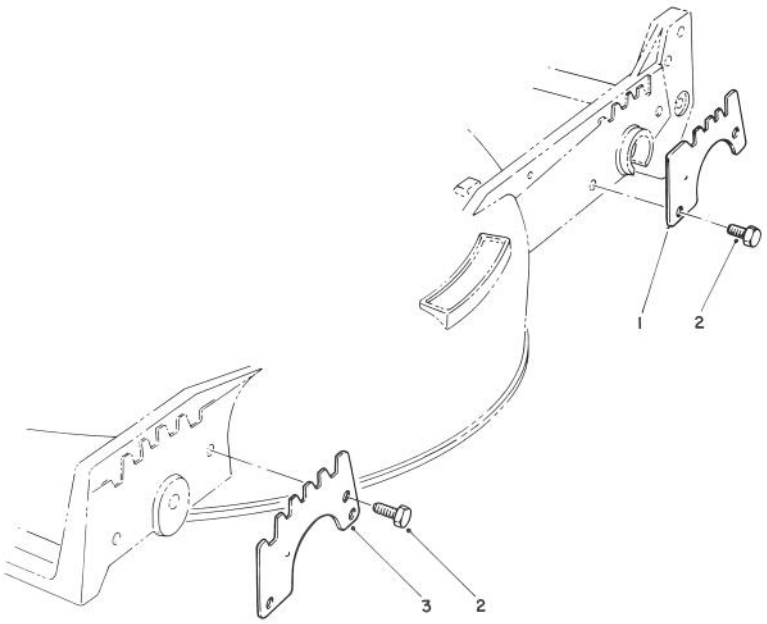

C-0332

WEAR PLATE MODEL NO. 49-4080 (OPTIONAL)

Ref. No.	Part No.	Description	No. Used
1	49-4070	Plate - Rear Wear	2
2	32104-17	Thread Forming Screw	8

Ref. No.	Part No.	Description	No. Used
3	43-5050	Plate - Wear Front	2

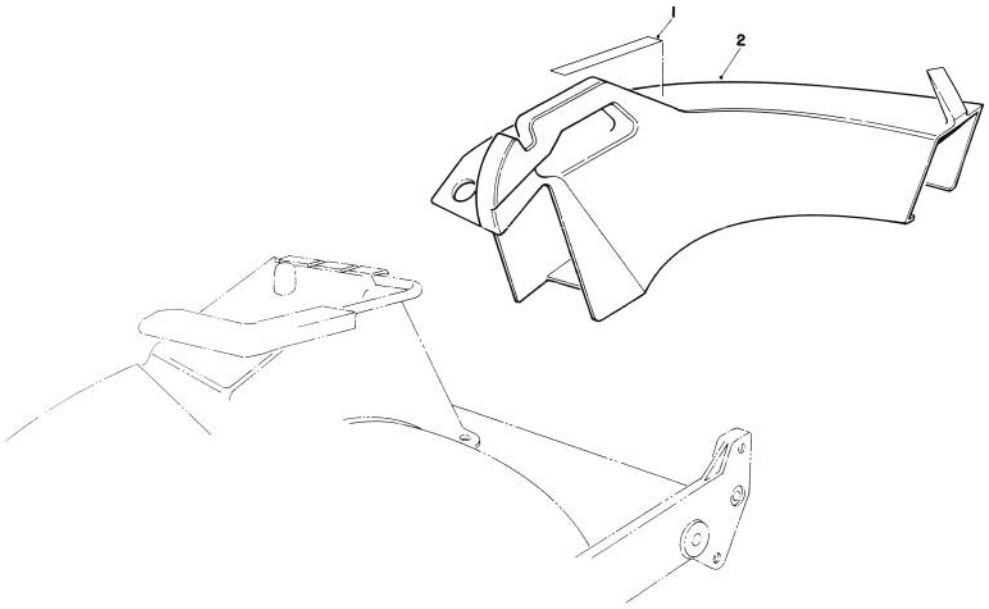

T-0716

SIDE DISCHARGE CHUTE MODEL NO. 59168 (OPTIONAL)

Ref. No.	Part No.	Description	No. Used
1	76-4780	Decal - Caution	1
2	13-2239	Chute - Discharge (Incl. Ref. #1)	1

Ref. No.	Part No.	Description	No. Used

*Not Illustrated

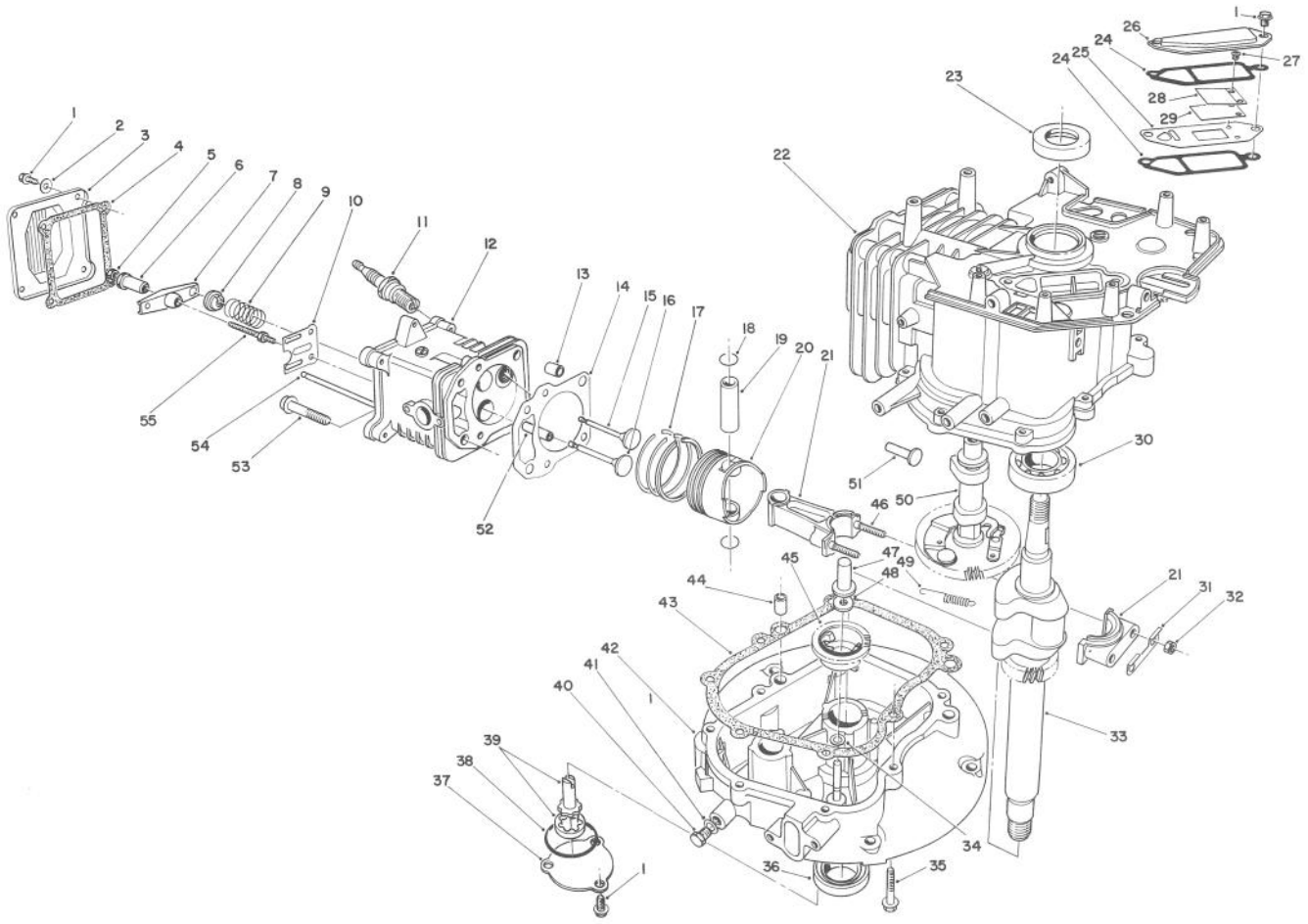

C-0157

ENGINE ASSEMBLY (MODEL NO. VML0-2)

Ref. No.	Part No.	Description	No. Used
1	81-1170	Bolt - Self Tapping	9
2	81-3790	Washer - Flat	4
3	81-3780	Cover - Rocker Arm	1
4	81-3770	Gasket - Rocker Arm Cover	1
5	81-3760	Nut - Jam	2
6	81-3750	Pivot - Rocker Arm	2
7	81-3740	Arm - Rocker	2
8	81-3730	Retainer - Valve Spring	2
9	81-3720	Spring - Valve	2
10	81-3710	Guide - Push Rod	1
11	81-3250	Spark Plug NGKBPR6ES	1
12	81-5540	Head - Cylinder Ass'y (Incl. Ref. #52)	1
*	81-5730	Cylinder Head Ass'y (Incl Ref. #2-10, 12, & 52- 55)	1
13	81-3690	Pin - Dowel	2
14	81-4710	Gasket - Cylinder Head	1
*	81-3820	Gasket Set	A/R
15	81-3660	Valve - Exhaust	1
16	81-3670	Valve - Intake	1
17	81-3650	Ring Set	1
18	50-0960	Circlip	2

Ref. No.	Part No.	Description	No. Used
19	81-3630	Pin - Piston	1
20	81-3620	Piston	1
21	81-3390	Connection Rod Ass'y (Incl. Ref. #31, 32, 46)	1
22	81-3280	Block - Engine (Incl. Ref. #23 & 30)	1
23	81-3290	Seal - Upper Crankshaft	1
24	81-3300	Gasket - Breather	2
25		Plate - Breather	1
26	81-3320	Cover - Breather	1
27		Screw - Reed Valve	2
28		Retainer - Reed Valve	1
29		Valve - Reed	1
*	81-3370	Reed Valve Assembly (Incl. Ref. #25, & 27-29)	1
30	81-3380	Ball Bearing	1
31	81-3400	Plate - Lock	1
32	50-0510	Nut	2
33	81-3430	Crankshaft	1
34	81-3440	Washer	1
35	81-3450	Bolt	7
36	81-3460	Seal - Lower Crankshaft	1
37	81-3470	Cover - Oil Pump	1

*Not Illustrated

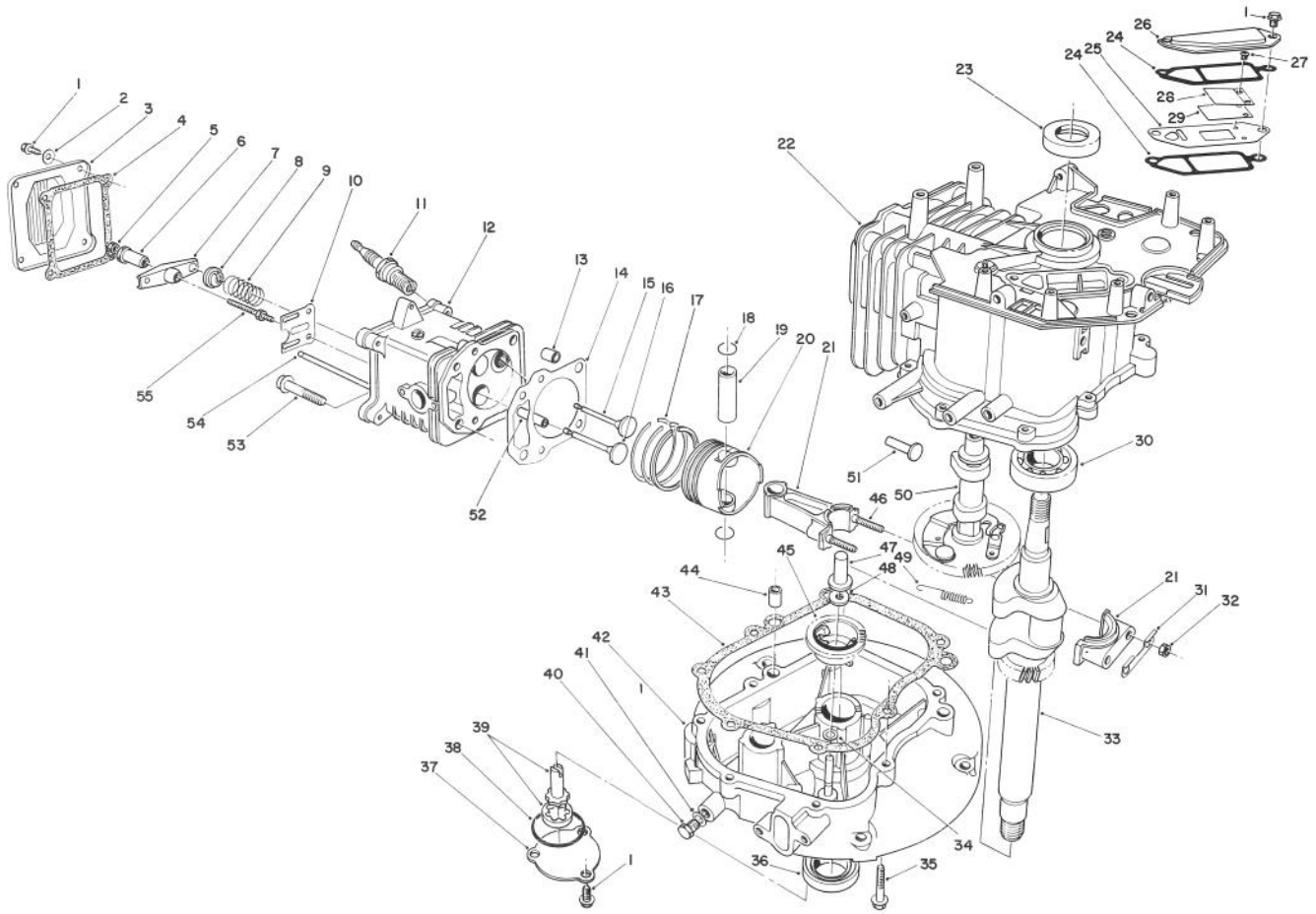

C-0157

ENGINE ASSEMBLY (CONTINUED) (MODEL NO. VML0-2)

Ref. No.	Part No.	Description	No. Used
38	81-3480	O-Ring	1
39	81-3490	Oil Pump Assembly	1
40	81-4970	Plug - Oil Drain	1
41	81-3510	Gasket - Drain Plug	1
42	81-3520	Crankcase - Lower	1
43	81-3530	Gasket - Crankcase	1
44	50-0450	Pin - Dowel	2
45	81-3550	Governor Flyweight Ass'y	1
46	81-3610	Stud - Connection Rod	2
47	81-3560	Plunger - Governor	1
48	81-3570	Washer	1

Ref. No.	Part No.	Description	No. Used
49	81-3580	Spring - Compression Release	1
50	81-5550	Camshaft Assembly (Incl. Ref. #49)	1
51	81-3600	Tappet	2
52	81-3830	Guide - Valve	2
53	50-0190	Bolt	4
54	81-3810	Rod - Push	2
55	81-3800	Stud - Rocker Arm	2
*	13-5939	Short Block Assembly	1
*	75-9850	Tube - Oil Drain	1

*Not Illustrated

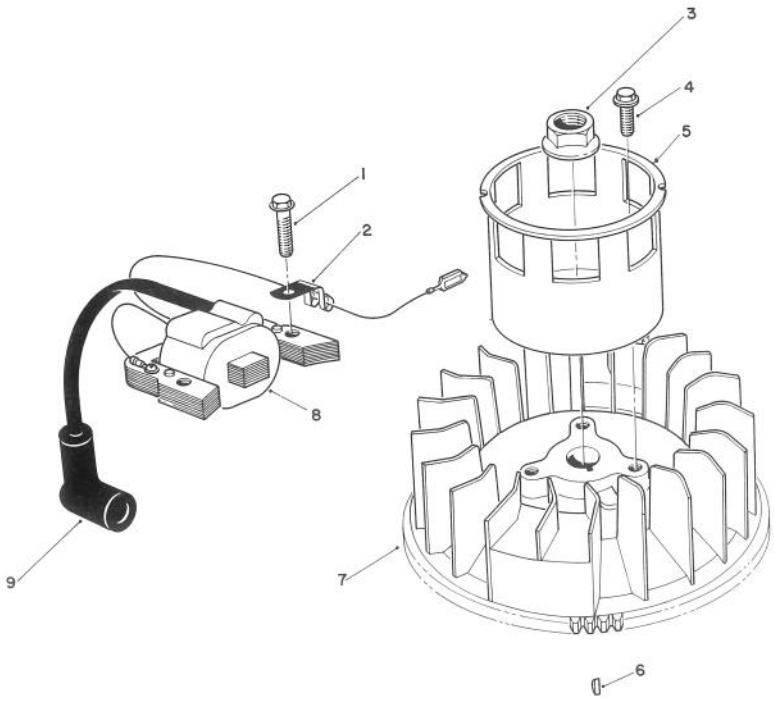

C-0305

MAGNETO & FLYWHEEL ASSEMBLY (MODEL VML0-2)

Ref. No.	Part No.	Description	No. Used
1	53-0860	Bolt	2
2	81-1480	Clamp	1
3	81-3890	Nut	1
4	81-1300	Bolt	3
5	81-3910	Cup - Starter	1

Ref. No.	Part No.	Description	No. Used
6	81-3930	Key - Flywheel	1
7	81-3920	Flywheel	1
8	81-5580	Coil Assembly - Magneto (Incl. Ref. # 9)	1
9	81-3860	Cover - Spark Plug	1

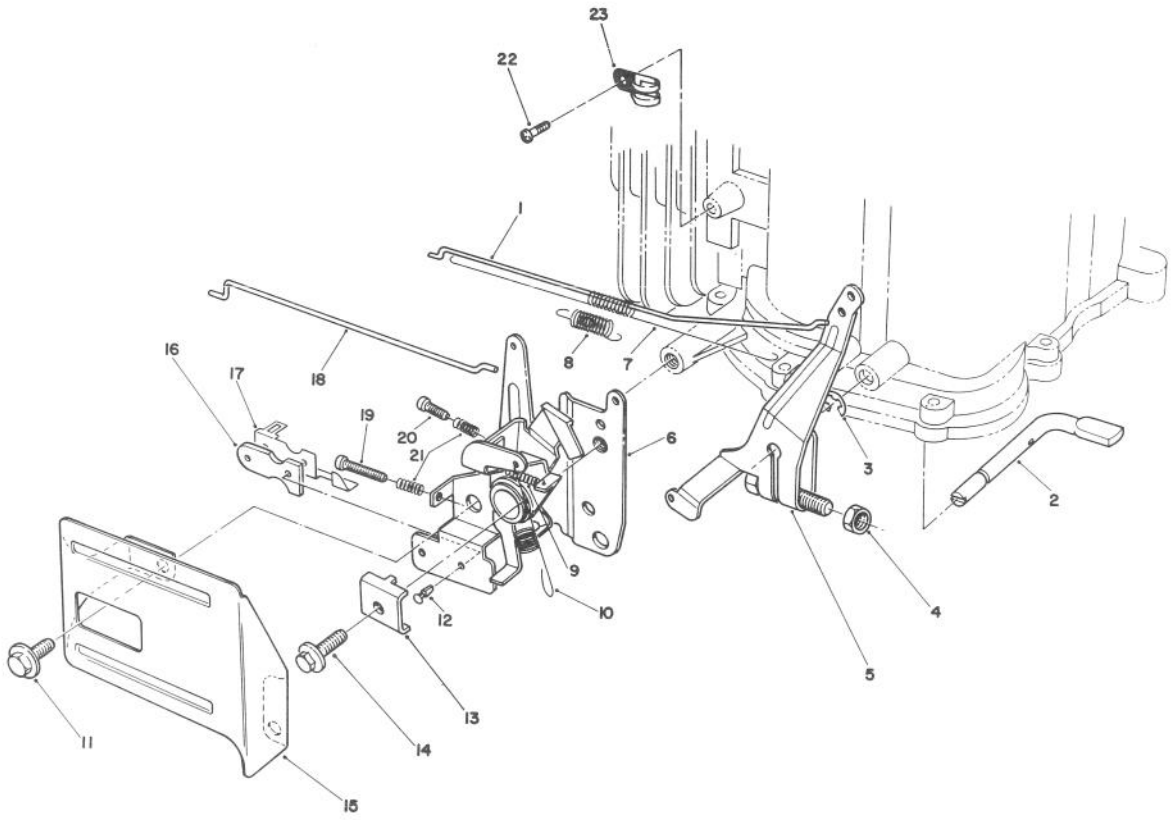

C-0407

GOVERNOR ASSEMBLY (MODEL NO. VML0-2)

Ref. No.	Part No.	Description	No. Used
1	81-4450	Rod - Carburetor	1
2	81-4480	Shaft - Governor	1
3	81-4540	E-Ring	1
4	81-3760	Nut	1
5	81-4500	Governor Arm Assembly	1
6	81-4510	Throttle & Choke Control	1
7	81-4470	Spring - Carburetor Rod	1
8	81-4460	Spring - Choke Lever	1
9	81-4570	Spring	1
10	81-4520	Spring - Governor	1
11	81-1170	Bolt	2
12	81-4530	Rivet	2

Ref. No.	Part No.	Description	No. Used
13	81-1690	Clamp - Cable	1
14	50-0130	Bolt	1
15	57-5750	Guard - Throttle	1
16	81-1830	Insulator - Kill Switch	1
17	81-1840	Terminal - Switch	1
18	81-4440	Rod - Choke	1
19	81-4560	Screw	1
20	81-4550	Screw	1
21	81-2900	Spring	2
22	81-0380	Screw	1
23	81-4780	Clamp	1

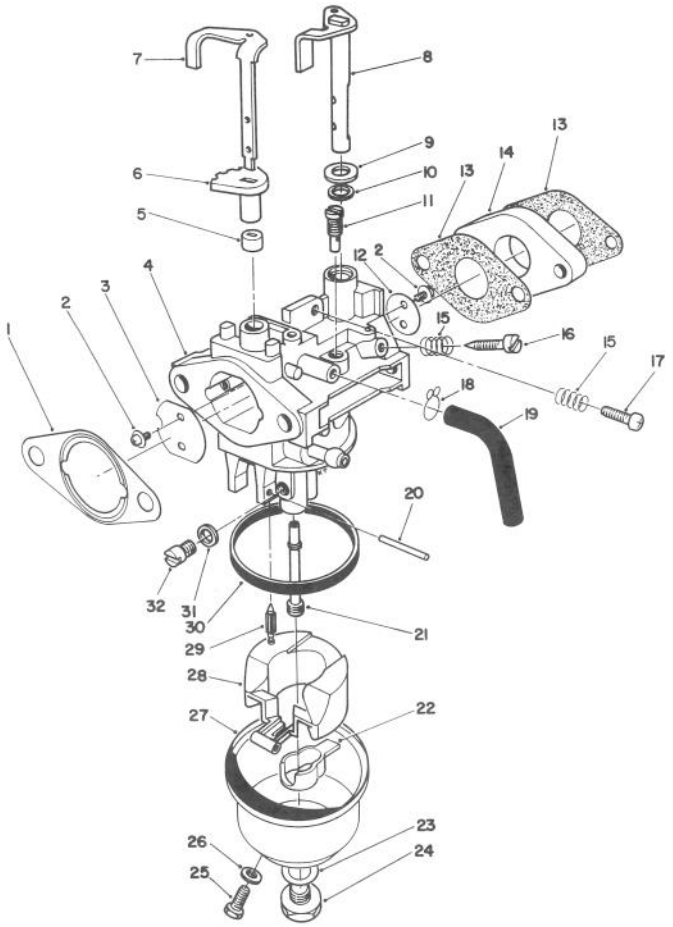

C-0160

CARBURETOR ASSEMBLY (MODEL NO. VML0-2)

Ref. No.	Part No.	Description	No. Used
1	81-4250	Gasket - Air Cleaner	1
2	81-2710	Screw - Choke Valve	4
3	81-2720	Valve - Choke	1
4		Body - Carburetor	1
5	81-5530	Ring - Lower Choke	1
6	81-5520	Ring - Upper Choke	1
7	81-5510	Shaft - Choke Valve	1
8	81-2920	Shaft - Throttle Valve	1
9	81-4280	Washer	1
10	81-4290	Seal - Throttle Shaft	1
11	81-5620	Jet - Pilot (#38.8)	1
12	81-2940	Valve - Throttle	1
13	81-5560	Gasket - Carburetor	2
14	81-5570	Block - Insulator	1
15	81-2580	Spring	2
16	50-2360	Screw - Pilot	1
17	50-0250	Screw - Idler Stop	1
18	81-4300	Clamp	1
19	81-4310	Tube - Bowl Vent	1
20	81-5600	Pin - Hinge	1

Ref. No.	Part No.	Description	No. Used
21	81-5630	Nozzle - Main	1
22	81-4940	Spacer - Float	1
23	81-2650	Gasket - Bowl Screw	1
24	81-2660	Screw - Bowl	1
25	81-2670	Screw - Drain	1
26	81-2680	Gasket - Drain Screw	1
27	81-4340	Bowl - Float	1
28	81-4920	Float	1
29	81-4700	Needle	1
30	81-2630	Gasket - Float Bowl	1
31	81-4350	Spacer	1
32	81-2340	Main Jet (#72.5)	1
*	81-5610	Main Jet (#70) (For high alt.)	1
*	81-4270	Shaft - Choke Assembly (Incl. Ref. # 5, 28, & 29)	1
*	81-5650	Carburetor Assembly (Incl. Ref. # 2-10, 13-26, & 30-32)	1
*	81-5820	Needle Valve Kit w/Seat	1

*Not Illustrated

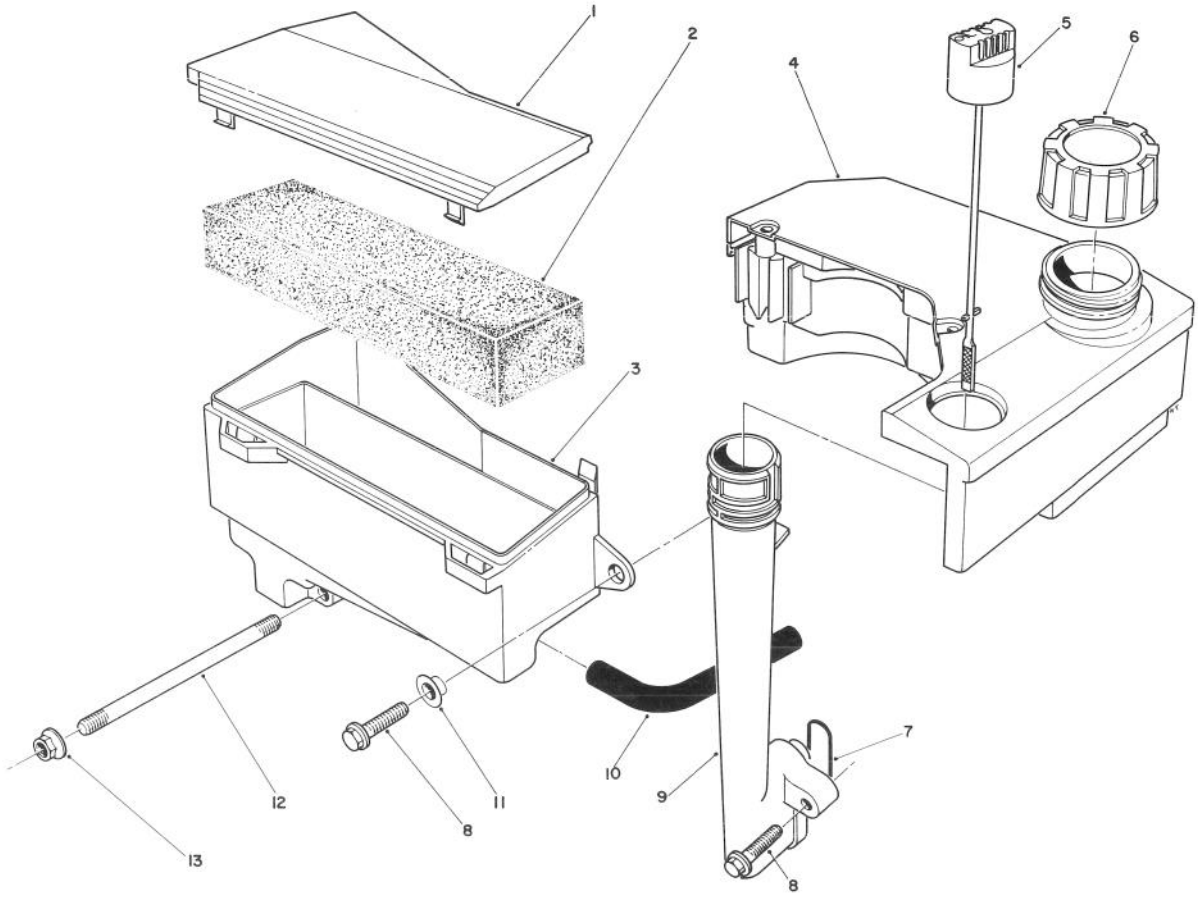

C-0161

AIR CLEANER & FUEL TANK ASSEMBLY (MODEL NO. VML0-2)

Ref. No.	Part No.	Description	No. Used
1	81-4110	Cover - Air Cleaner	1
2	81-4120	Filter - Foam	1
3		Body - Air Cleaner	1
4	55-3530	Fuel Tank	1
5	81-4140	Dipstick - Oil	1
6	55-3570	Gas Cap	1
7	81-4150	O-Ring - Oil Tube	1
8	81-4160	Bolt	3

Ref. No.	Part No.	Description	No. Used
9	81-4170	Tube - Oil Fill	1
10	81-4180	Hose Crankcase Breather	1
11	81-4200	Spacer	1
12	81-4220	Stud - Carburetor	2
13	50-7180	Nut	2
*	81-4240	Air Cleaner Assembly (Incl. Ref. # 1 & 3)	1

*Not Illustrated

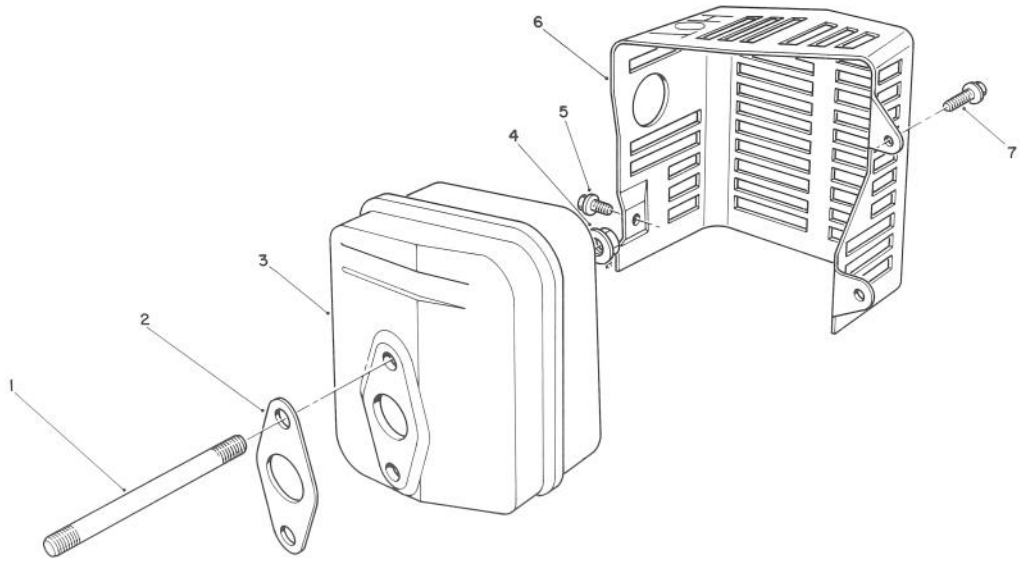

T-0726

MUFFLER ASSEMBLY (MODEL NO. VML0-2)

Ref. No.	Part No.	Description	No. Used
1	81-4380	Stud - Muffler	2
2	81-4390	Gasket - Muffler	1
3	81-4400	Muffler	1
4	50-0530	Nut	2
5	81-4420	Screw	1

Ref. No.	Part No.	Description	No. Used
6	81-4430	Cover - Muffler	1
7	81-1170	Bolt	2
*	56-6730	Spark Arrestor Kit (Incl. Ref. # 2) (Optional)	1

*Not Illustrated

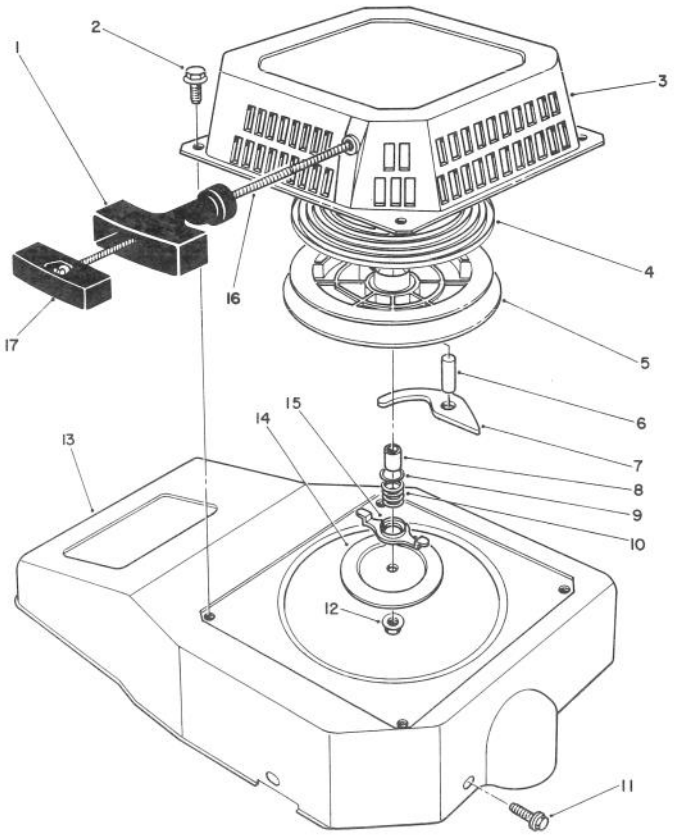

C–0162

RECOIL ASSEMBLY (MODEL NO. VML0–2)

Ref. No.	Part No.	Description	No. Used
1	81–4000	Handle	1
2	81–1280	Bolt	4
3	81–3970	Case – Recoil	1
4	81–4010	Spring – Recoil	1
5	81–4020	Reel – Rope Pulley	1
6	81–4030	Pin	1
7	81–4040	Pawl	1
8	81–4050	Spacer	1
9	81–4060	Washer	1
10	81–4070	Spring – Friction	1

Ref. No.	Part No.	Description	No. Used
11	81–1170	Bolt	3
12	81–4100	Locknut	1
13	81–3960	Shroud – Blower	1
14	81–4090	Plate – Friction	1
15	81–4080	Guide – Pawl	1
16	81–1270	Rope – Recoil	1
17	81–4960	Retainer – Rope Handle	1
*	81–3270	Recoil Starter Assembly (Incl. Ref. # 1, 3–10, 12, & 14–17)	1

*Not Illustrated

LTS-105279