Form No. 3357–753 Rev. A

Reel Stabilizer Kit

Reelmaster® 5200–D/5400–D Series Traction Units

Part No. 110–9718

Installation Instructions

1. Park the machine on a level surface, lower the cutting units, stop the engine, engage the parking brake and remove the key from the ignition switch.
2. Affix a stabilizer guard to each strap on the stabilizer assembly (Fig. 1).
3. Secure the stabilizer assembly to front of the machine with (3) screws as shown in figure 1.

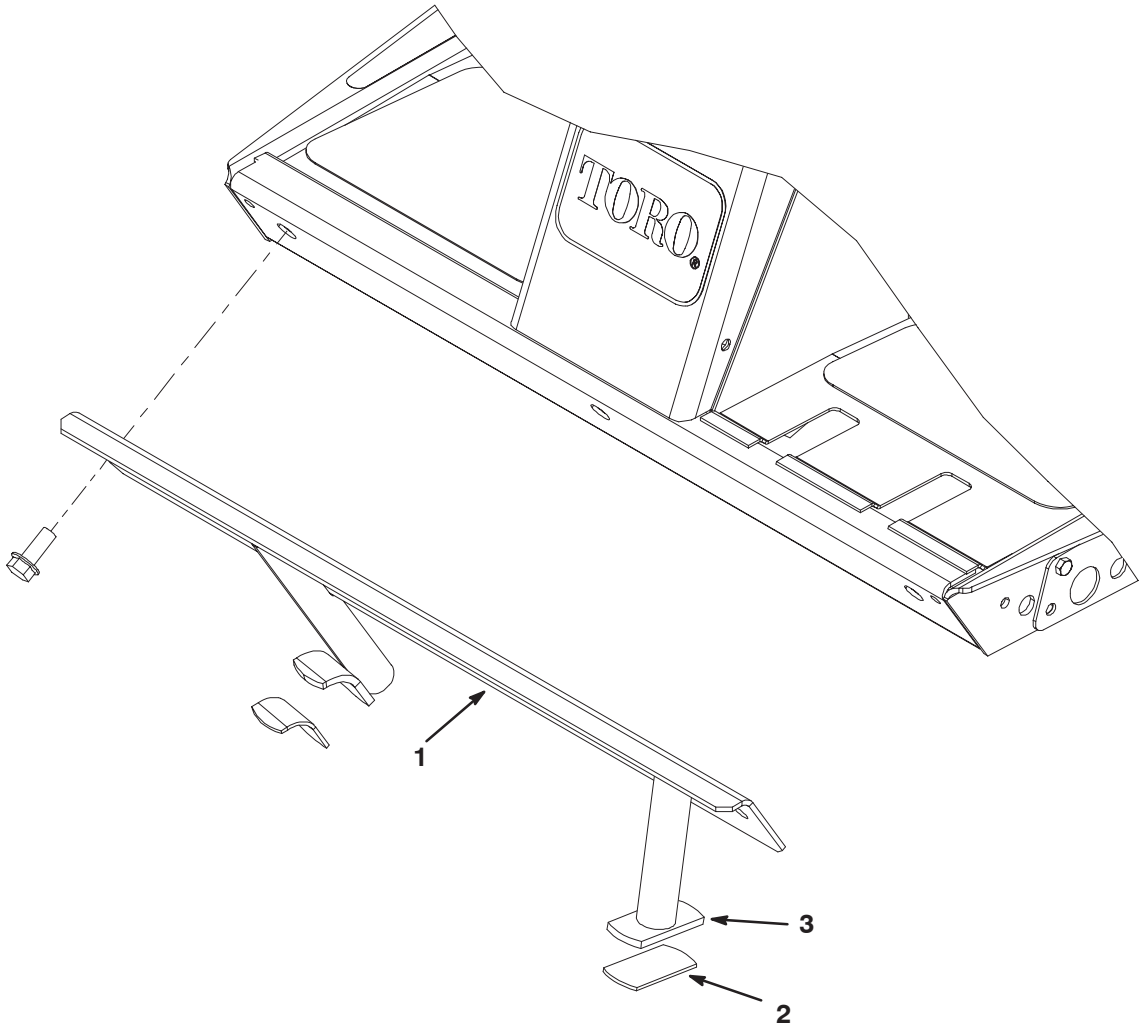

Figure 1

1. Stabilizer assembly
2. Guard
3. stabilizer strap

© 2007 by The Toro Company
8111 Lyndale Avenue South
Bloomington, MN 55420-1196

All Rights Reserved
Printed in the USA