FORM NO. 3314-692

TORO

MODEL NO. 51790-1000001 & UP

PARTS CATALOG

12V BLOWER

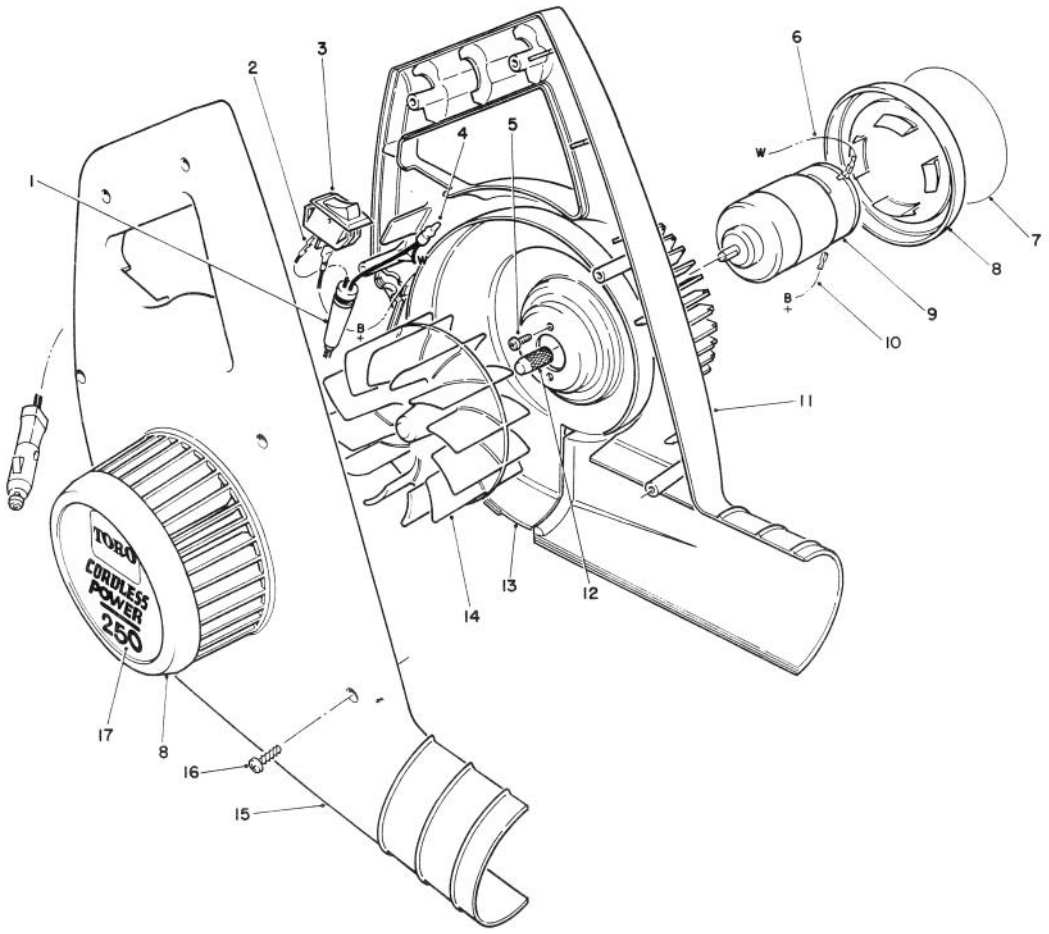

C-0600

BLOWER HOUSING & MOTOR ASSEMBLY

Ref. No.	Part No.	Description	No. Used
1	73-3301	Cord - Power Supply	1
2		Terminal - Female	1
3	64-5581	Switch	1
4	218-496	Connector - Wire	1
5	64-7720	Screw - Phillips, Pan Hd.	2
6	73-3381	Wire Assembly (White)	1
7	73-2480	Decal - Warning	1
8	73-2410	Cover - Intake	2
9	73-4920	Motor (Incl. Ref. #5, & 12-14)	1

Ref. No.	Part No.	Description	No. Used
10	73-3380	Wire Assembly (Black)	1
11	73-2390	Housing - L.H.	1
12		Shaft - Knurled	1
13		Cover - Motor	1
14		Impeller	1
15	73-2400	Housing - R.H.	1
16	32104-121	Screw - Thread Forming	6
17	73-2500	Decal - Toro	1

TPS

© The TORO Company - 1991

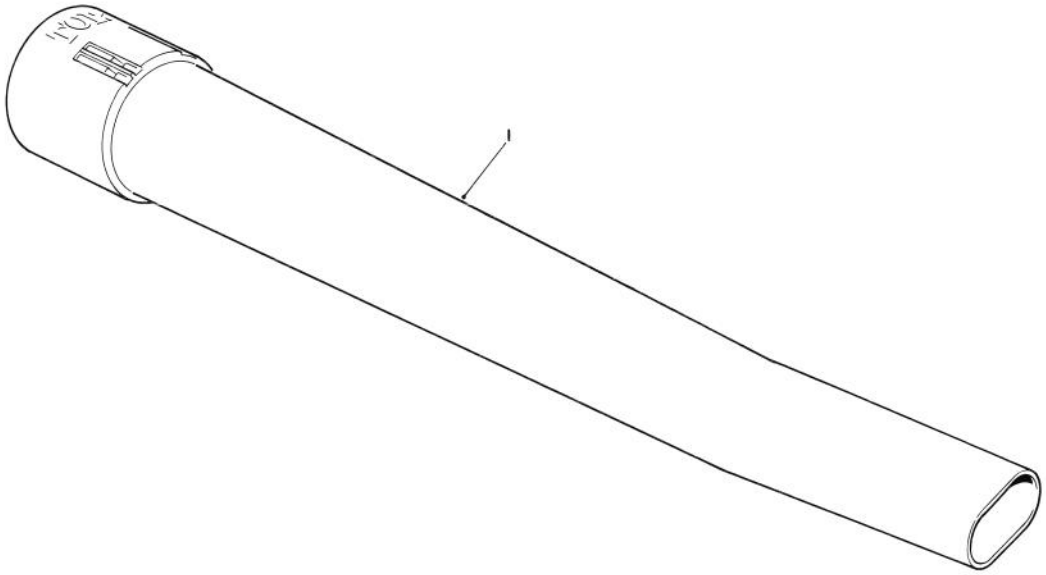

C-0601

BLOWER TUBE

Ref. No.	Part No.	Description	No. Used
1	73-2440	Tube	1

Ref. No.	Part No.	Description	No. Used

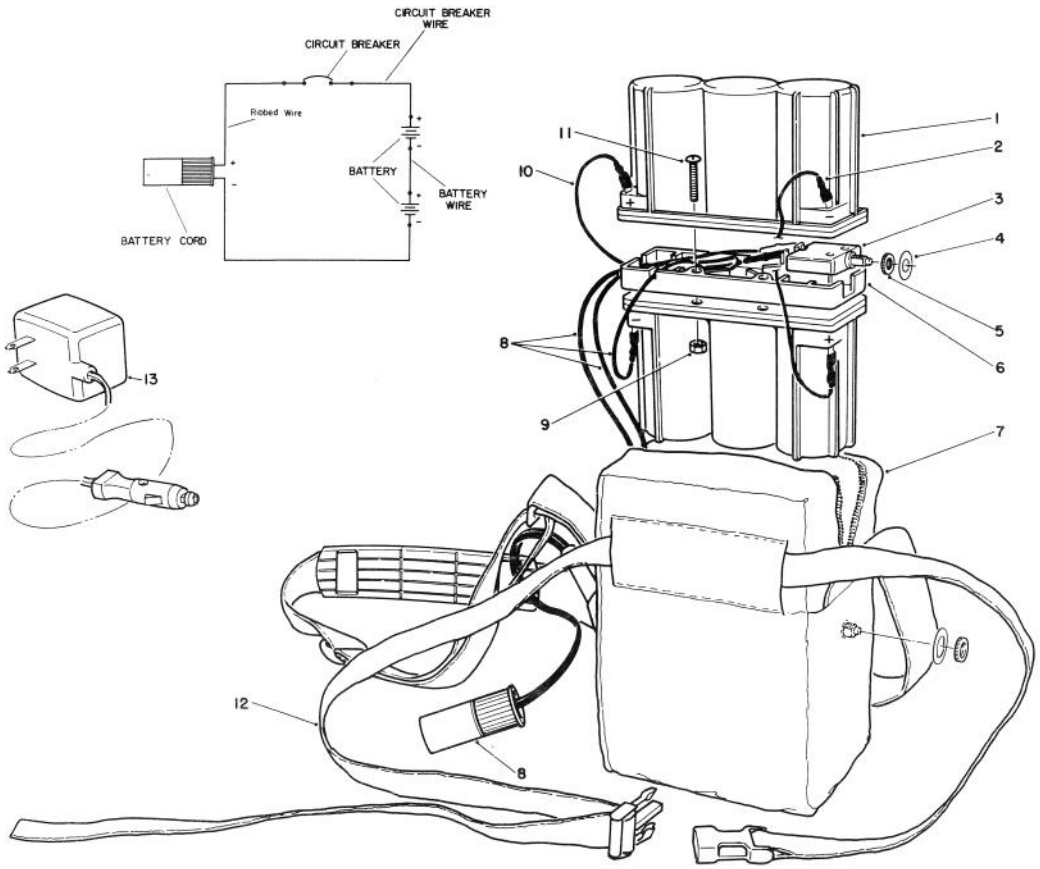

C-0595

BATTERY PACK ASSEMBLY

Ref. No.	Part No.	Description	No. Used
1	73-3190	Battery - 6 Volt	2
2	73-3260	Wire - Battery	1
3	64-5570	Circuit Breaker	1
4	73-3240	Plate - Breaker, Circuit	2
5	73-3230	Nut - Knurled	2
6	73-3220	Spacer - Battery	1
7	64-8330	Pack - Soft	1

Ref. No.	Part No.	Description	No. Used
8	73-3310	Cord - Battery	1
9	3217-26	Nut	4
10	73-3270	Wire - Breaker, Circuit	1
11	3250-23	Screw - Phillips, Pan Hd.	4
12	64-8360	Belt	1
13	64-8400	Charger - 12 Volt	1

*Not Illustrated

PRODUCT CHANGES

In an effort to make improvements available to TORO owners as quickly as possible, minor changes are incorporated into Toro's products from time to time that do not become immediately shown in the Parts Catalog. If such a change has been made in your unit, which is not reflected in your manual, see your TORO Distributor or his Authorized TORO Service Dealer for information and part numbers.

COUNTRIES OTHER THAN THE UNITED STATES OR CANADA

Customers who have purchased TORO products exported from the United States or Canada should contact their Toro Distributor (Dealer) to obtain guarantee policies for your country, province or state. If for any reason you are dissatisfied with your Distributor's service or have difficulty obtaining guarantee information, contact the TORO importer. If all other remedies fail, you may contact us at The Toro Company.

MAINTENANCE RECORD

Date								

Compliance with Radio Interference Regulations Certified.
Certifie Conforme au Reglement sur le Brouillage Radioelectrique.

Litho in U.S.A.
LTS-104811