Form No. 3357-799 Rev A

DH 200 Lawn Tractor

Model No. 74573—270000001 and Up

Operator's Manual

Register your product at www.Toro.com

Original Instructions (EN)

Contents

	Page
Introduction	2
Safety	3
Safe Operation Practices for Riding Rotary Lawn Mowers	3
Toro Riding Mower Safety	5
Sound Pressure	5
Sound Power	5
Vibration	5
Slope Chart	7
Safety and Instruction Decals	9
Gasoline and Oil	12
Recommended Gasoline	12
Using Stabilizer/Conditioner	13
Filling the Fuel Tank	13
Checking the Engine Oil Level	13
Operation	13
Controls	13
Using the Parking Brake	14
Positioning the Seat	14
Using the Blade Control (PTO)	14
Grass Collector Warning Light	15
Setting the Height of Cut	15
Adjusting the Discharge Baffle	15
Adjusting the Mower Gauge Wheels	15
Starting the Engine	16
Stopping the Engine	16
Using the Safety Interlock System	17
Testing the Safety Interlock System	18
Pushing the Tractor Manually	18
Driving the Tractor Forward or Backward	19
Stopping the Tractor	20
Using the Bag on Demand	20
Emptying the Grass Collector	20
Towing Attachments	21
Operating Tips	21
Maintenance	22
Recommended Maintenance Schedule	22
Servicing the Engine Oil	23
Servicing the Brake	24
Checking the Tire Pressure	24
Greasing and Lubricating the Tractor	25
Replacing the Fuse	27
Servicing the Battery	27
Servicing the Spark Plug	29
Draining the Fuel Tank	30
Replacing the Fuel Filter	31
Servicing the Air Cleaner	31
Servicing the Blades	32
Removing the Mower	34
Installing the Mower	34
Adjusting the Blade Drive Belt	35
Adjusting the Height Adjustment Cable Rod Assembly	35
Servicing the Grass Collector	36
Cleaning and Storing the Tractor	36
Troubleshooting	38

Introduction

Read this manual carefully to learn how to operate and maintain your product properly. The information in this manual can help you and others avoid injury and product damage. Although Toro designs and produces safe products, you are responsible for operating the product properly and safely.

You may contact Toro directly at www.Toro.com for product and accessory information, help finding a dealer, or to register your product.

Whenever you need service, genuine Toro parts, or additional information, contact an Authorized Service Dealer or Toro Customer Service and have the model and serial numbers of your product ready. Figure 1 illustrates the location of the model and serial numbers on the product.

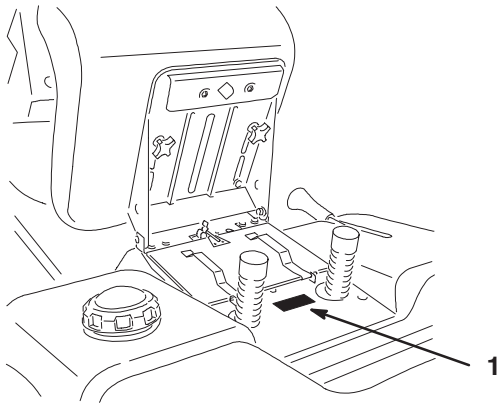

Figure 1

1. Location of the model and serial numbers

©2006 by The Toro Company
8111 Lyndale Avenue South
Bloomington, MN 55420-1196, USA

Contact us at www.Toro.com
All Rights Reserved
Printed in the USA

Write the product model and serial numbers in the space below:

Model No. _____

Serial No. _____

This manual identifies potential hazards and has special safety messages that help you and others avoid personal injury and even death. ***Danger***, ***Warning***, and ***Caution*** are signal words used to identify the level of hazard. However, regardless of the hazard, be extremely careful.

Danger signals an extreme hazard that **will** cause serious injury or death if you do not follow the recommended precautions.

Warning signals a hazard that **may** cause serious injury or death if you do not follow the recommended precautions.

Caution signals a hazard that may cause minor or moderate injury if you do not follow the recommended precautions.

This manual uses 2 other words to highlight information. **Important** calls attention to special mechanical information and **Note:** emphasizes general information worthy of special attention.

Safety

Safe Operation Practices for Riding Rotary Lawn Mowers

Read and understand the contents of this manual before operating the tractor.

⚠ This is the safety alert symbol. It is used to alert you to potential personal injury hazards. Obey all safety messages that follow this symbol to avoid possible injury or death.

The following instructions are from the CEN standard EN 836:1997.

This product is capable of amputating hands and feet and of throwing objects. Always follow all safety instructions to avoid serious injury or death.

Training

- Read the instructions carefully. Be familiar with the controls and the proper use of the equipment.
- Never allow children or people unfamiliar with these instructions to use the lawnmower. Local regulations can restrict the age of the operator.
- Never mow while people, especially children, or pets are nearby.
- Keep in mind that the operator or user is responsible for accidents or hazards occurring to other people or their property.
- Do not carry passengers.
- All drivers should seek and obtain professional and practical instruction. Such instruction should emphasize:
  - the need for care and concentration when working with ride-on machines;
  - control of a ride-on machine sliding on a slope will not be regained by the application of the brake. The main reasons for loss of control are:
    - insufficient wheel grip;
    - being driven too fast;
    - inadequate braking;
    - the type of machine is unsuitable for its task;
    - lack of awareness of the effect of ground conditions, especially slopes;
    - incorrect hitching and load distribution.

Preparation

- While mowing, always wear substantial footwear and long trousers. Do not operate the equipment when barefoot or wearing open sandals.
- Thoroughly inspect the area where the equipment is to be used and remove all objects which may be thrown by the machine.
- **Warning**—Fuel is highly flammable.
  - Store fuel in containers specifically designed for this purpose.
  - Refuel outdoors only and do not smoke while refuelling.
  - Add fuel before starting the engine. Never remove the cap of the fuel tank or add fuel while the engine is running or when the engine is hot.
  - If fuel is spilled, do not attempt to start the engine but move the machine away from the area of spillage and avoid creating any source of ignition until fuel vapors have dissipated.
  - Replace all fuel tanks and container caps securely.
- Replace faulty silencers.
- Before using, always visually inspect to see that the blades, blade bolts and cutter assembly are not worn or damaged. Replace worn or damaged blades and bolts in sets to preserve balance.

- On multi-bladed machines, take care as rotating one blade can cause other blades to rotate.

Operation

- Do not operate the engine in a confined space where dangerous carbon monoxide fumes can collect.
- Mow only in daylight or in good artificial light.
- Before attempting to start the engine, disengage all blade attachment clutches and shift into neutral.
- Do not use on slopes of more than
  - 5 ° when mowing on side hills;
  - 10 ° when mowing uphill;
  - 15 ° when mowing downhill.
- Remember there is no such thing as a safe slope. Travel on grass slopes requires particular care. To guard against overturning:
  - do not stop or start suddenly when going up or downhill;
  - engage clutch slowly, always keep machine in gear, especially when travelling downhill;
  - machine speeds should be kept low on slopes and during tight turns;
  - stay alert for humps and hollows and other hidden hazards;
  - never mow across the face of the slope, unless the lawnmower is designed for this purpose.
- Use care when pulling loads or using heavy equipment.
  - Use only approved drawbar hitch points.
  - Limit loads to those you can safely control.
  - Do not turn sharply. Use care when reversing.
  - Use counterweight(s) or wheel weights when suggested in the instruction handbook.
- Watch out for traffic when crossing or near roadways.
- Stop the blades rotating before crossing surfaces other than grass.
- When using any attachments, never direct discharge of material toward bystanders nor allow anyone near the machine while in operation.
- Never operate the machine with damaged guards or without safety protective devices in place.
- Do not change the engine governor settings or overspeed the engine. Operating the engine at excessive speed can increase the hazard of personal injury.
- Before leaving the operator's position:
  - disengage the power take-off and lower the attachments;
  - change into neutral and set the parking brake;
  - stop the engine and remove the key.
- Disengage drive to attachments, stop the engine, and disconnect the spark plug wire(s) or remove the ignition key
  - before clearing blockages or unclogging chute;
  - before checking, cleaning or working on the lawnmower;
  - after striking a foreign object. Inspect the lawnmower for damage and make repairs before restarting and operating the equipment;
  - if the machine starts to vibrate abnormally (check immediately).
- Disengage drive to attachments when transporting or not in use.
- Stop the engine and disengage drive to attachment
  - before refuelling;
  - before removing the grass catcher;
  - before making height adjustment unless adjustment can be made from the operator's position.
- Reduce the throttle setting during engine run-out and, if the engine is provided with a shut-off valve, turn the fuel off at the conclusion of mowing.

Maintenance and Storage

- Keep all nuts, bolts and screws tight to be sure the equipment is in safe working condition.
- Never store the equipment with fuel in the tank inside a building where fumes can reach an open flame or spark.
- Allow the engine to cool before storing in any enclosure.
- To reduce the fire hazard, keep the engine, silencer, battery compartment and fuel storage area free of grass, leaves, or excessive grease.
- Check the grass catcher frequently for wear or deterioration.
- Replace worn or damaged parts for safety.
- If the fuel tank has to be drained, this should be done outdoors.
- On multi-bladed machines, take care as rotating one blade can cause other blades to rotate.
- When machine is to be parked, stored or left unattended, lower the cutting means unless a positive mechanical lock is used.

Toro Riding Mower Safety

The following paragraph contains safety information specific to Toro products that is not included in the CEN standard.

Use only Toro-approved attachments. The warranty may be voided if you use the tractor with unapproved attachments.

Sound Pressure

This unit has a maximum sound pressure level at the operator's ear of 79 dBA, based on measurements of identical machines per Directive 98/37/EC.

Sound Power

This unit has a guaranteed sound power level of 100 dBA, based on measurements of identical machines per Directive 2000/14/EC.

Vibration

This unit does not exceed a hand/arm vibration level of 3.6 m/s^2, based on measurements of identical machines per Directive 98/37/EC.

This unit does not exceed a whole body vibration level of 1.1 m/s^2, based on measurements of identical machines per Directive 98/37/EC.

Slope Chart

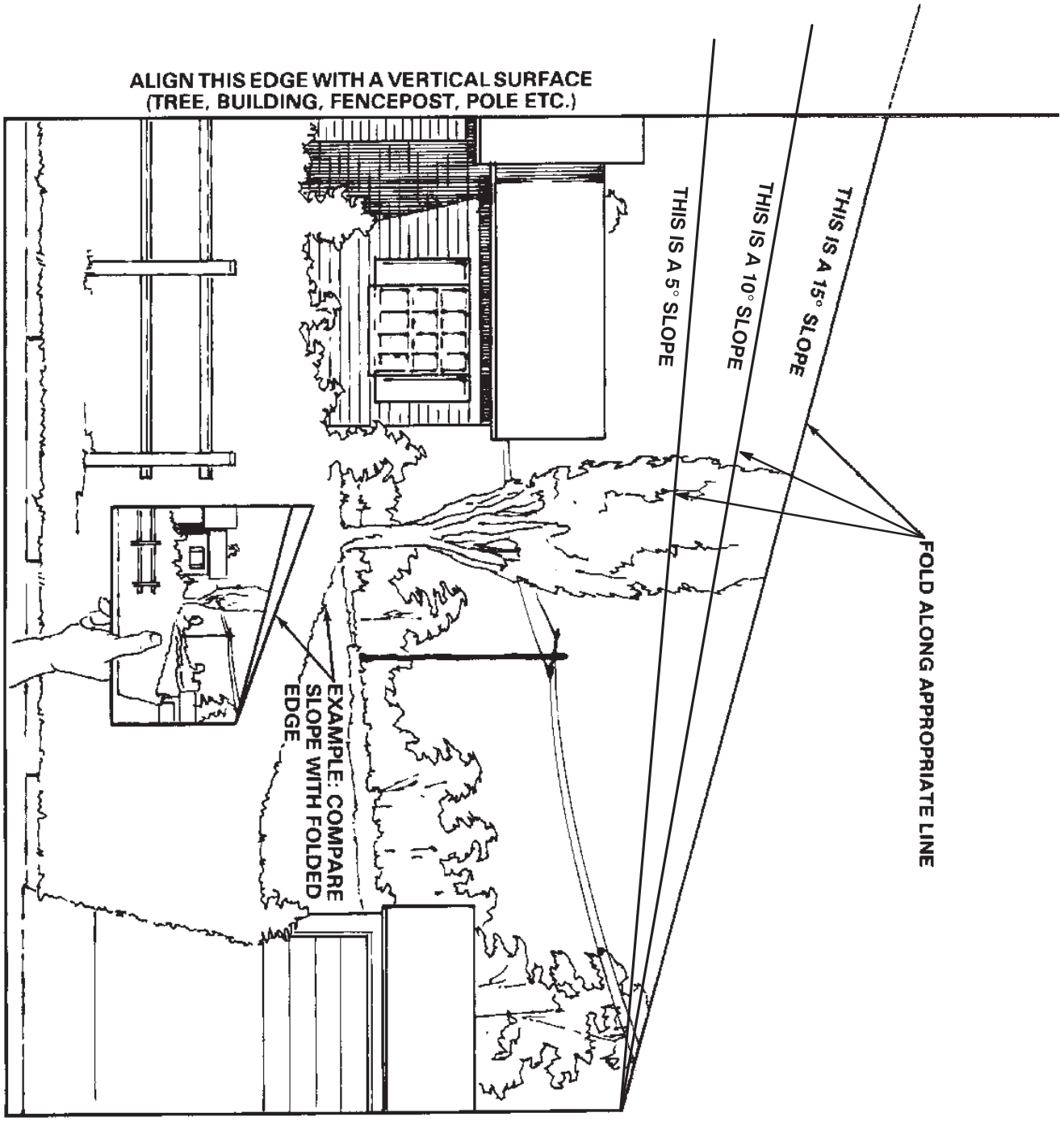
ALIGN THIS EDGE WITH A VERTICAL SURFACE
(TREE, BUILDING, FENCEPOST, POLE ETC.)
THIS IS A 5° SLOPE
THIS IS A 10° SLOPE
THIS IS A 15° SLOPE
FOLD ALONG APPROPRIATE LINE
EXAMPLE: COMPARE SLOPE WITH FOLDED EDGE

Safety and Instruction Decals

Safety decals and instructions are easily visible to the operator and are located near any area of potential danger. Replace any decal that is damaged or lost.

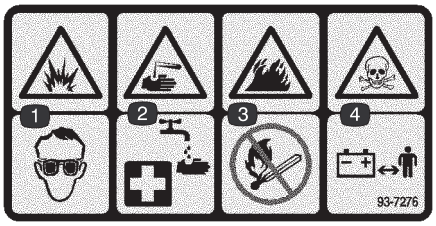

93-7276

1. Explosion hazard—wear eye protection.
2. Caustic liquid/chemical burn hazard—to perform first aid, flush with water.
3. Fire hazard—no fire, open flames, or smoking.
4. Poison hazard—keep children a safe distance from the battery.



93-7824

1. Thrown object hazard—stay a safe distance from the machine.
2. Thrown object hazard, mower—keep the deflector in place.
3. Cutting/dismemberment of hand or foot—stay away from moving parts.



99-5340

1. KeyChoice—turn to enable reverse mowing.

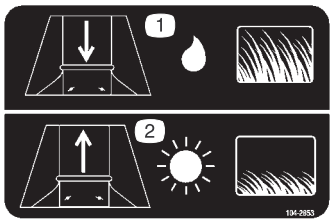

104-2853

1. Increase the discharge opening when mowing long, wet grass.
2. Decrease the discharge opening when mowing short, dry grass.

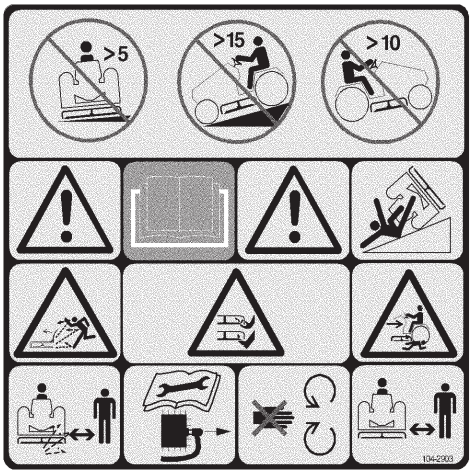

104-2903

1. Warning, tipping hazard—do not drive across slopes greater than 5 degrees, down slopes greater than 15 degrees, or up slopes greater than 10 degrees.
2. Warning—read the *Operator's Manual.*
3. Thrown object hazard, mower—keep bystanders a safe distance from the machine.
4. Cutting/dismemberment hazard of hand or foot, mower blade—disconnect the spark plug wire and read the instructions before servicing or performing maintenance; stay away from moving parts.
5. Crushing/dismemberment hazard of bystanders—keep bystanders a safe distance from the machine.

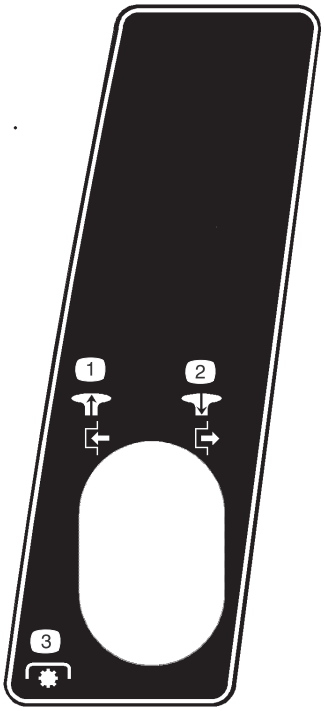

104-3235

1. Pull the knob out to start the PTO.
2. Push the knob in to stop the PTO.
3. Power take-off (PTO)



104-3237

1. Parking brake

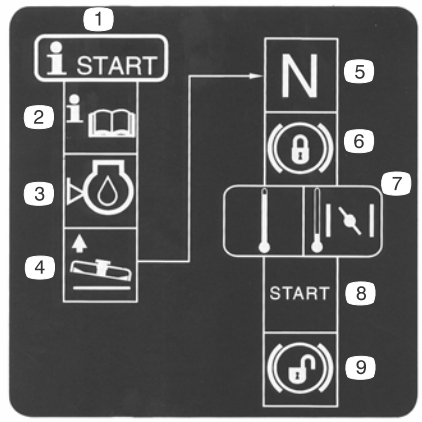

104-3238

1. Starting procedure
2. Read the *Operator's Manual*.
3. Check the engine oil level.
4. Raise the mower.
5. Put the tractor in neutral.
6. Lock the parking brake.
7. If the engine is cold, move the throttle control lever to Choke.
8. Start the engine.
9. Unlock the parking brake.

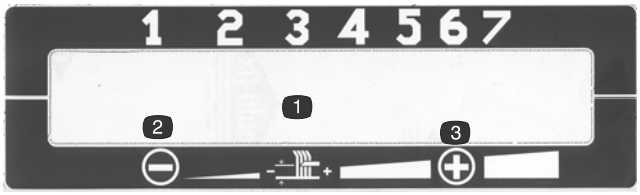

104-3239 and 104-3240

1. Height of cut
2. Decrease
3. Increase

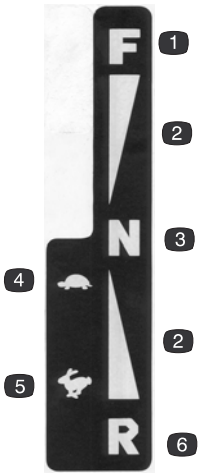

104-3241

1. Forward
2. Continuous variable speed
3. Neutral
4. Slow
5. Fast
6. Reverse



104-3243

1. To drive the tractor, push the lever in.
2. To push the tractor, pull the lever out.

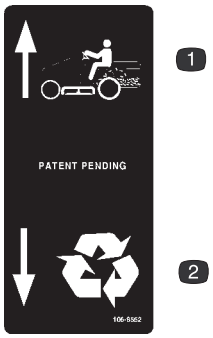

106-8552

1. Collect grass
2. Recycle



107-2220

1. Mowing in reverse enabled.
2. Empty the grass collector.
3. Power Take-off (PTO)

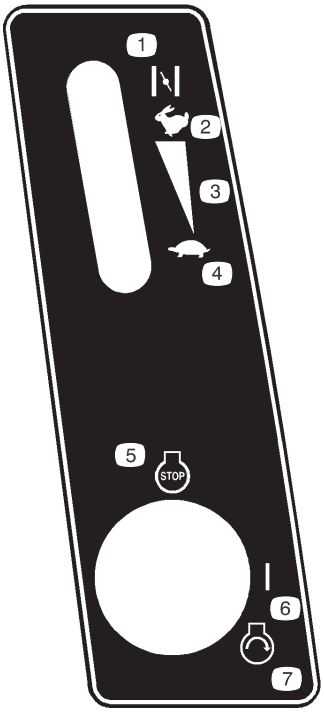

107-8920

1. Choke
2. Fast
3. Continuous variable setting
4. Slow
5. Engine—stop
6. On
7. Engine—start

Gasoline and Oil

Recommended Gasoline

Use unleaded regular gasoline suitable for automotive use (85 pump octane minimum). You may use leaded regular gasoline if unleaded regular is not available.

Important Never use methanol, gasoline containing methanol, or gasohol containing more than 10% ethanol because the fuel system could be damaged. Do not mix oil with gasoline.

Danger

In certain conditions, gasoline is extremely flammable and highly explosive. A fire or explosion from gasoline can burn you and others and can damage property.

- **Fill the fuel tank outdoors in an open area when the engine is cold. Wipe up any gasoline that spills.**
- **Do not fill the fuel tank completely full. Add gasoline to the fuel tank until the level is 1/4 to 1/2 in. (6 to 13 mm) below the bottom of the filler neck. This empty space in the tank allows the gasoline to expand.**
- **Never smoke when handling gasoline, and stay away from an open flame or where a spark may ignite the gasoline fumes.**
- **Store gasoline in an approved container and keep it out of the reach of children.**
- **Never buy more than a 30-day supply of gasoline.**
- **Always place gasoline containers on the ground away from your vehicle before filling.**
- **Do not fill gasoline containers inside a vehicle or on a truck or trailer bed because interior carpets or plastic truck bed liners may insulate the container and slow the loss of any static charge.**
- **When practical, remove gas-powered equipment from the truck or trailer and refuel the equipment with its wheels on the ground.**
- **If this is not possible, refuel such equipment on a truck or trailer from a portable container, not from a gasoline dispenser nozzle.**
- **If you must use a gasoline dispenser, keep the nozzle in contact with the rim of the fuel tank or container opening at all times until fueling is complete.**

Using Stabilizer/Conditioner

Use a fuel stabilizer/conditioner in the tractor to provide the following benefits:

- It keeps gasoline fresh during storage for up to 90 days. For longer storage, drain the fuel tank.
- It cleans the engine while it runs.
- It eliminates gum-like varnish buildup in the fuel system, which causes hard starting.

Important Do not use fuel additives containing methanol or ethanol.

Add the correct amount of fuel stabilizer/conditioner to the gasoline.

Note: A fuel stabilizer/conditioner is most effective when it is mixed with fresh gasoline. To minimize the chance of varnish deposits in the fuel system, use a fuel stabilizer/conditioner at all times.

Filling the Fuel Tank

1. Stop the engine and wait for all moving parts to stop.
2. Set the parking brake.
3. Clean around the fuel tank cap and remove the cap.
4. Add unleaded regular gasoline to the fuel tank until the level is 1/4 to 1/2 in. (6 to 13 mm) below the bottom of the filler neck. **Do not fill the fuel tank completely full.**

   Note: This space in the tank allows gasoline to expand.
5. Install the fuel tank cap securely.
6. Wipe up any gasoline that spills.

Checking the Engine Oil Level

Before you start the engine and use the tractor, check the oil level in the engine crankcase; refer to Checking the Oil Level on page 23.

Operation

Note: Determine the left and right sides of the tractor from the normal operating position.

Controls

Become familiar with the controls (Fig. 2) before you start the engine and operate the tractor.

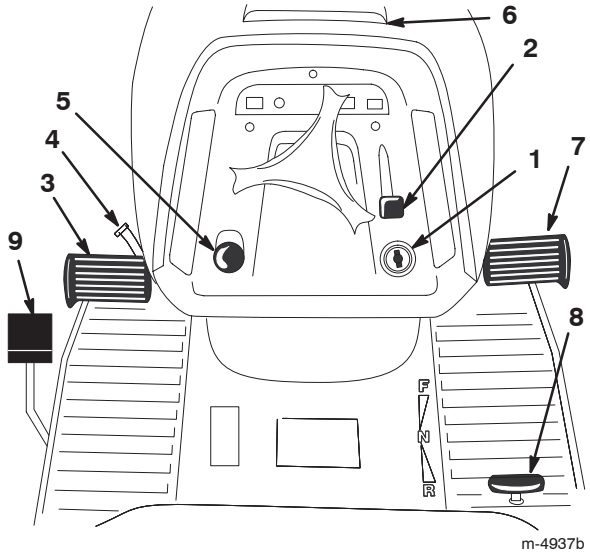

Figure 2

1. Ignition
2. Throttle control/Choke lever
3. Brake pedal
4. Parking brake lever
5. Blade control (PTO) knob
6. Hood opening
7. Forward speed pedal
8. Reverse speed pedal
9. Bag-on-demand lever

Using the Parking Brake

Always set the parking brake whenever you stop the tractor or leave it unattended.

Setting the Parking Brake

1. Push the brake pedal (Fig. 2) down and hold it.
2. Turn the parking brake lever (Fig. 2) counterclockwise and gradually take your foot off the brake pedal.

   Note: The clutch/brake pedal should stay in the depressed (locked) position.

Releasing the Parking Brake

1. Push down on the brake pedal (Fig. 2).

   Note: The parking brake lever should release.
2. Gradually release the brake pedal.

Positioning the Seat

The seat can move forward and backward. Position the seat where you have the best control of the tractor and are most comfortable.

1. Raise the seat and loosen the adjustment knobs (Fig. 3).

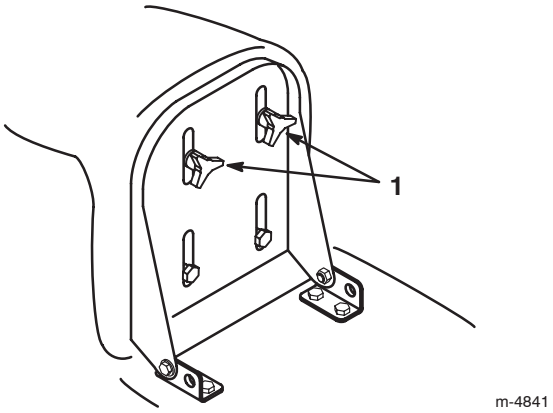

Figure 3

1. Adjustment knobs

2. Move the seat to the desired position and tighten the knobs.

Using the Blade Control (PTO)

The blade control (PTO) knob engages and disengages power to the blades.

Engaging the Blades

1. Depress the brake pedal to stop the tractor.
2. Pull the blade control (PTO) knob out to the Engaged position (Fig. 4).

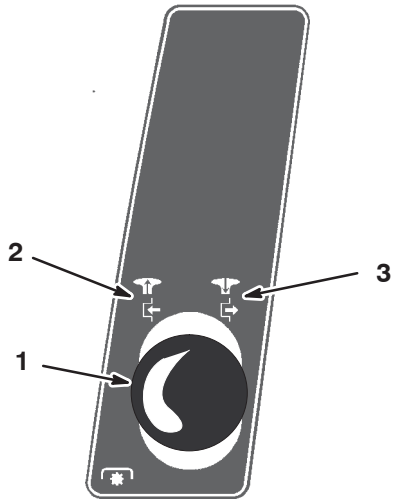

Figure 4

1. Blade control (PTO)
2. Engaged
3. Disengaged

Note: The blade control (PTO) light on the dash turns on when you engage the blades (PTO) as shown in Figure 5.

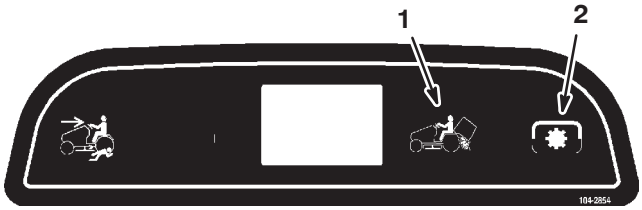

Figure 5

1. Grass collector warning light
2. Blade control (PTO) light

Disengaging the Blades

1. Depress the brake pedal to stop the tractor.
2. Push the blade control (PTO) knob into the Disengaged position (Fig. 4).

Grass Collector Warning Light

When the grass collector needs to be emptied, the warning light comes on (Fig. 5) and a buzzer sounds.

Important To prevent the discharge tunnel from getting clogged, disengage the blades (PTO) when the warning light and buzzer are on.

Setting the Height of Cut

Use the height-of-cut lever to raise and lower the mower to the desired cutting height. You can set the cutting height to 7 different positions from approximately 1 to 4 in. (25 to 102 mm).

Pull or push on the height-of-cut lever and shift it into the desired position (Fig. 6).

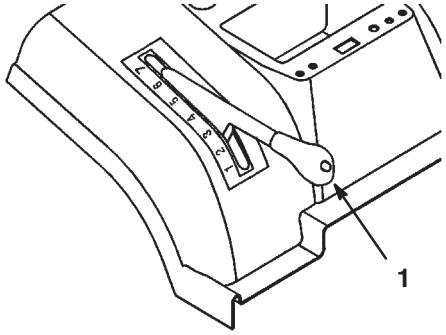

Figure 6

1. Height-of-cut lever

Important You must set the height-of-cut lever to the highest position (7) when you transport the tractor off the lawn to prevent damaging to the blades.

Adjusting the Discharge Baffle

The discharge baffle changes the size of the discharge opening to assist the operation of the bag fill indicator.

1. Remove the grass collector; refer to Removing the Grass Collector on page 36.
2. Loosen the 2 nuts on the mowing conditions plate and slide the plate up if you are mowing short, dry grass or slide it down if you are mowing long, wet grass (Fig. 7).

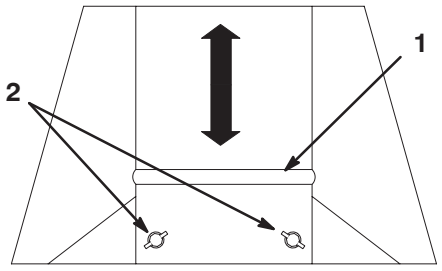

Figure 7

1. Plate
2. Nuts

3. Tighten the nuts.
4. Install the grass collector; refer to Installing the Grass Collector on page 36.

Adjusting the Mower Gauge Wheels

The mower front gauge wheels guide the mower over uneven ground. The mower wheels must always be in the bottom (lowest) hole in the wheel bracket (Fig. 8).

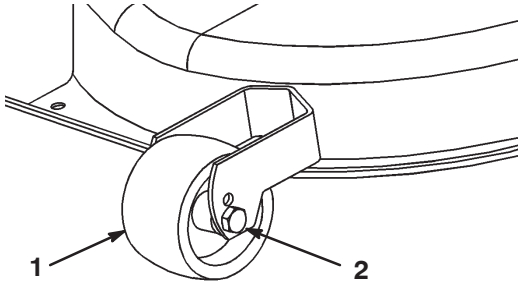

Figure 8

1. Wheel
2. Bottom hole

Starting the Engine

1. Open the fuel shut-off valve located between the fuel tank and the engine (Fig. 9).

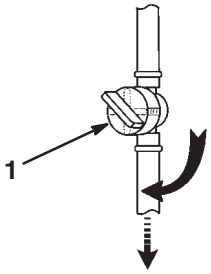

Figure 9

1. Fuel shut-off valve

Note: The valve handle should align with the fuel hose.

2. Sit down on the seat.
3. Set the parking brake; refer to Setting the Parking Brake on page 14.

   Note: The engine does not start unless you set the parking brake or fully depress the brake pedal.

4. Disengage the blades (PTO). Refer to Figure 10.

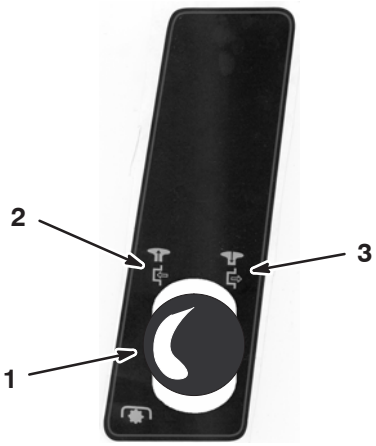

Figure 10

1. Blade control (PTO) knob
2. Engaged
3. Disengaged

Note: The engine will not start if the blades (PTO) are engaged.

5. When starting a cold engine, shift the throttle control lever to the Choke position (Fig. 10).

Note: To start a warm engine, shift the throttle control lever to the Fast position.

6. Shift the throttle control lever to the Slow position (Fig. 11).

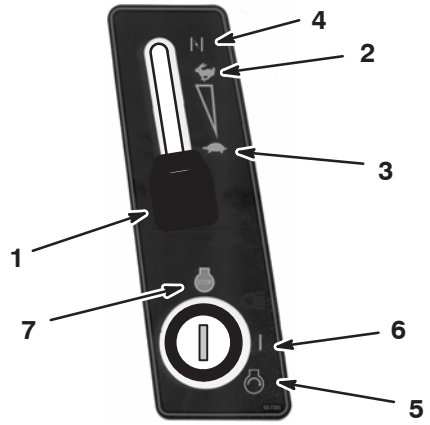

Figure 11

1. Throttle control lever
2. Fast
3. Slow
4. Choke
5. Start
6. On
7. Off

7. Turn the ignition key clockwise and hold it in the Start position (Fig. 11). When the engine starts, release the key.

Important If the engine does not start after 15 seconds of continuous cranking, turn the ignition key to Off and let the starter motor cool for 2 minutes; refer to Troubleshooting on page 38.

8. After the engine starts, slowly shift the throttle control lever to Fast (Fig. 11).

Stopping the Engine

1. Move the throttle control lever to Slow (Fig. 11).

Important To prevent backfiring and damage to the engine, do not shift the throttle control lever to the Choke or Fast positions to stop the engine.

2. Turn the ignition key to Off (Fig. 11).

Note: If the engine has been working hard or is hot, let it idle for a minute before turning the ignition key to Off. This allows the engine to cool the engine before you stop it. You may stop the engine in an emergency by turning the ignition key to Off.

Using the Safety Interlock System

Caution

If the safety interlock switches are disconnected or damaged, the tractor could operate unexpectedly, causing personal injury.

- **Do not tamper with the interlock switches.**
- **Check the operation of the interlock switches daily and replace any damaged switches before operating the tractor.**
- **Replace switches every 2 years regardless of whether they are operating properly or not.**

Understanding the Safety Interlock System

The safety interlock system is designed to prevent the engine from starting unless:

- You are sitting on the seat.
- The brake pedal is depressed.
- The blade control (PTO) knob is in the Disengaged position.
- The traction control pedal is in Neutral.

The safety interlock system stops the engine if you rise from the seat and the traction control pedal is not in the Neutral position, the parking brake is not set, or the blade control (PTO) knob is in the Engaged position.

The safety interlock system is designed to stop the mower if:

- You shift into Reverse with the blades (PTO) engaged.
- You remove the bag or dump the grass.

Setting the KeyChoice® Switch to Operate in Reverse

The interlock feature on the tractor prevents the power take-off (PTO) from operating when you back up the tractor. If you operate the tractor in reverse with the blades (PTO) engaged (i.e., with the mower blades or other attachment running), the engine will stop. **Do not mow in reverse unless it is absolutely necessary.**

If you need to use the blades (PTO) while backing up, turn off the interlock feature using the KeyChoice switch located near the seat bracket (Fig. 12).

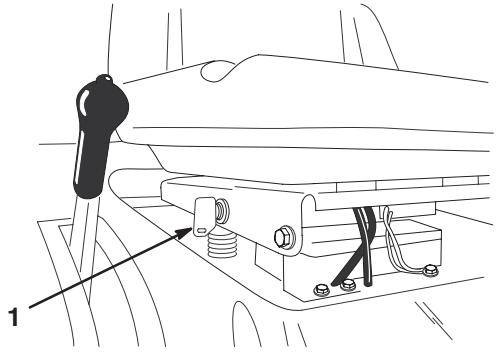

Figure 12

1. KeyChoice switch

Danger

You could back over a child or bystander while the mower blades or other attachment is engaged and cause serious injury or death.

- **Do not mow in reverse unless it is absolutely necessary.**
- **Do not insert the KeyChoice key unless it is absolutely necessary.**
- **Always look backward and down before backing up the tractor.**
- **Use the KeyChoice switch only if you are certain that no children or other bystanders will enter the mowing area.**
- **Be very observant after deactivating the interlock because the sound of the engine may prevent you from noticing that a child or bystander has entered the work area.**
- **Always remove both the ignition and KeyChoice keys and put them in a safe place out of the reach of children or unauthorized users when you leave the tractor unattended.**

1. Engage the blades (PTO).
2. Insert the KeyChoice key into the switch (Fig. 12).
3. Turn the KeyChoice key.

   A red light on the front console (Fig. 13) turns on, indicating that the interlock is disabled.

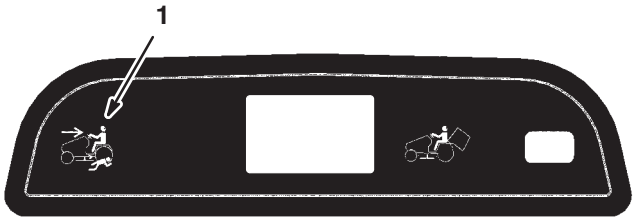

Figure 13

1. Operating-in-reverse light

4. Operate the tractor in reverse and complete your task.
5. Disengage the blades (PTO) to activate the interlock.
6. Remove the KeyChoice key and put it in a safe place out of the reach of children.

Testing the Safety Interlock System

Caution

If the safety interlock switches are disconnected or damaged, the tractor could operate unexpectedly, causing personal injury.

- **Do not tamper with the interlock switches.**
- **Check the operation of the interlock switches daily and replace any damaged switches before operating the tractor.**

Test the safety interlock system before you use the tractor each time. If the safety interlock system does not operate as described below, have an Authorized Service Dealer repair the safety interlock system immediately. While sitting in the seat, perform the following checks:

1. Set the parking brake, shift the blade control (PTO) knob to the Engage position, and turn the ignition key to Start: The engine should not crank.
2. Shift the blade control (PTO) knob to the Disengage position, release the parking brake, and turn the ignition key to Start: The engine should not crank.
3. Set the parking brake, shift the blade control (PTO) knob to Disengage, and start the engine. While the engine is running, release the parking brake and rise slightly from the seat: The engine should stop.
4. Shift the blade control (PTO) knob into the Disengage position, put the traction control pedal in Neutral, and start the engine. While the engine is running, shift the blade control (PTO) knob into the Engage position and put the traction control pedal in Reverse: The engine should stop.
5. Shift the blade control (PTO) knob into the Disengage position and put the traction control pedal in Neutral. Start the engine, shift the blade control (PTO) knob into the Engage position, and turn the KeyChoice key and release it: The operating-in-reverse warning light should illuminate.
6. Shift the blade control (PTO) knob to the Disengage position: The operating-in-reverse warning light should turn off.

Pushing the Tractor Manually

Important Always push the tractor manually. Never tow the tractor because it may damage the transaxle.

To Push the Tractor

1. Park the tractor on a level surface.
2. Disengage the blades (PTO).
3. Set the parking brake.
4. Stop the engine and wait for all moving parts to stop.
5. Remove the ignition key.
6. Remove the grass collector; refer to Removing the Grass Collector on page 36.
7. Pull the drive control (located at the rear of the tractor), out to the Push position.

8. Release the parking brake.

   Note: This disengages the drive system and allows the wheels to turn freely (Fig. 14).

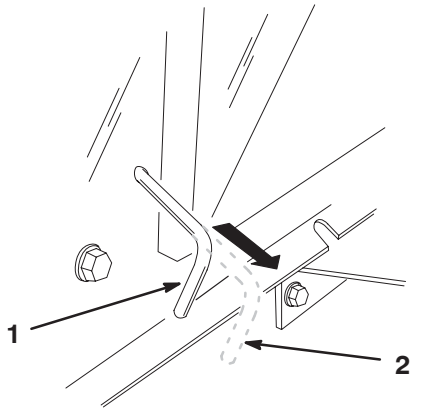

Figure 14

1. Operate position
2. Push position

To Operate the Tractor

1. Set the parking brake.
2. Push the drive control in to the Operate position (Fig. 14) to engage the drive system.

   Note: The tractor will not drive unless the drive control is in the Operate position.
3. Install the grass collector; refer to Installing the Grass Collector on page 36.

Driving the Tractor Forward or Backward

The throttle control regulates the engine speed as measured in RPM (revolutions per minute). Place the throttle control in the Fast position for best performance.

To go forward:

1. Release the parking brake; refer to Releasing the Parking Brake on page 14.
2. Place your foot on the traction control pedal and slowly press on the pedal to move forward (Fig. 15).

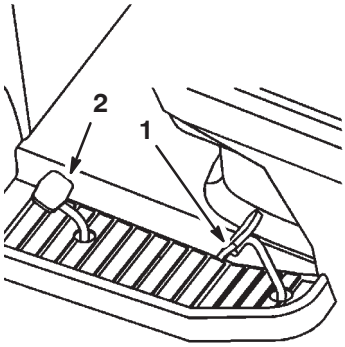

Figure 15

1. Traction control pedal
2. Reverse speed pedal

   Note: To increase the speed, push the traction control pedal down. To decrease the speed, release the pressure on the traction control pedal.

To go backward:

1. Release the parking brake; refer to Releasing the Parking Brake on page 14.
2. Place your foot on the reverse speed pedal and slowly press on the pedal to move backward (Fig. 15).

   Note: To increase the speed, push the reverse speed pedal down. To decrease the speed, release the pressure on the reverse speed pedal.

Important To avoid transmission damage, always release the parking brake before moving the traction control pedal or the reverse speed pedal.

Important To prevent damage to the mower, always set the mower to the highest cutting position when you drive the tractor off the lawn.

Stopping the Tractor

1. Release the traction control pedal or reverse speed pedal.
2. Disengage the blades (PTO).

Turn the ignition key to Off.

3. Set the parking brake if you leave the tractor unattended; refer to Setting the Parking Brake on page 14.

Note: Remove the keys from the ignition and KeyChoice switches.

Caution

Children or bystanders may be injured if they move or attempt to operate the tractor while it is unattended.

Always remove the ignition and KeyChoice keys and set the parking brake when leaving the tractor unattended, even if it is just for a few minutes.

Using the Bag on Demand

You can activate or deactivate the bag on demand feature while the tractor is mowing or is stopped. If you are bagging grass that is tall and thick, raise the height-of-cut and mow at a slower speed.

1. Move the bag-on-demand lever (Fig. 2) forward to bag the grass clippings.
2. Move the bag-on-demand lever rearward to stop bagging the grass clippings and recycle them.

Emptying the Grass Collector

When the collector warning light (Fig. 5) comes on and the buzzer sounds, the grass collector is full and must be emptied.

Important To prevent the discharge tunnel from getting clogged, disengage the blades (PTO) when the warning buzzer sounds.

1. Disengage the blades (PTO) and move the throttle to the Slow position.
2. Pull out the telescoping dump lever and push it forward and down to empty the grass collector (Fig. 16).

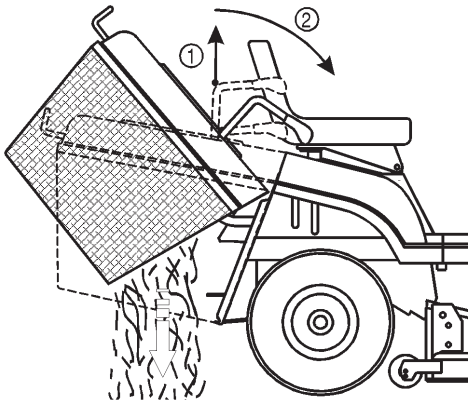

Figure 16

1. Pull up
2. Push forward and down

3. Slowly pull the dump lever upward to return the grass collector to the operating position.

Towing Attachments

The tractor is equipped for towing attachments with a maximum weight of 150 kg (331 lb.).

1. Remove the grass collector; refer to Removing the Grass Collector on page 36.
2. Install the attachment to the towing hitch located at the lower rear part of the tractor (Fig. 17).

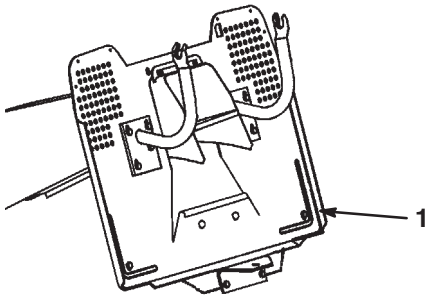

Figure 17

1. Towing hitch

Operating Tips

- For the best performance, operate the engine at the maximum speed. The mower requires air to thoroughly cut grass clippings, so do not set the height-of-cut too low or completely surround the mower in uncut grass. Always leave one side of the mower free from uncut grass to allow the air to be drawn into the mower.
- Cut the grass slightly longer than normal to ensure that the cutting height of the mower does not scalp any uneven ground. When cutting grass longer than 6 in. (15 cm) tall, cut the lawn twice to ensure an acceptable appearance.
- It is best to cut only about 1/3 of the grass blade. Do not cut more than that unless the grass is sparse or it is late fall when grass grows more slowly.
- Alternate the mowing direction to keep the grass standing straight. This also helps disperse clippings and enhances decomposition and fertilization.
- Grass grows at different rates at different times of the season. To maintain the same cutting height, which is a good practice, mow more often in early spring. As the grass growth rate slows in mid summer, mow less frequently.
- If the grass is longer than normal, or if it contains a high degree of moisture, raise the cutting height higher than usual, cut the grass at that setting, and then cut the grass again at the lower, normal setting.
- If you must stop the tractor while mowing, you may leave a clump of grass clippings on your lawn. To avoid this, do the following:
  - Engage the blades and move to a previously cut area.
  - Disperse the clippings evenly by raising the mower 1 or 2 height-of-cut settings while driving forward with the blades engaged.
- Use the washout port to clean clippings and dirt from the underside of the mower after each use. If grass and dirt build up inside the mower, the cutting quality will eventually become unsatisfactory.
- Maintain sharp blades throughout the season. Sharp blades cut grass cleanly without tearing or shredding the grass blades. Tearing and shredding the grass turns it brown at the edges, which slows its growth and increases the chance of disease. Every 30 days, check the blades for sharpness and file down any nicks.

Maintenance

Note: Determine the left and right sides of the tractor from the normal operating position.

Recommended Maintenance Schedule

Maintenance Service Interval	Maintenance Procedure
After first 5 hours	• Change the engine oil.
After first 20 hours	• Check the blade drive belt adjustment.
Each use	• Check the engine oil level. • Check the safety system. • Clean the mower housing. • Check the battery electrolyte level. • Check the tire pressure. • Check the blades. • Check the brakes.
Every 25 hours	• Grease the chassis.[2] • Service the foam air cleaner.[2] • Clean the outside of the engine.
Every 50 hours	• Change the engine oil.[1] • Adjust the blade drive belt.
Every 100 hours	• Service the paper air cleaner.[2] • Check the spark plug. • Replace the fuel filter.
Before storage	• Perform all of the maintenance procedures listed above. • Check the belts for wear or cracks. • Drain the fuel tank. • Paint chipped surfaces. • Charge the battery and disconnect the cables.

[1]Change the engine oil more frequently under a heavy load or in high ambient temperatures.

[2]Perform this procedure more often in dusty, dirty conditions.

Important Refer to your engine operator's manual for additional maintenance procedures.

Caution

If you leave the key in the ignition switch, someone could accidently start the engine and seriously injure you or other bystanders.

Remove the key from the ignition and disconnect the wire from the spark plug before you do any maintenance. Set the wire aside so that it does not accidentally contact the spark plug.

Servicing the Engine Oil

Check the oil level daily or after every use.

Change the oil after the first 5 operating hours and every 50 operating hours thereafter.

Note: Change the oil more frequently when operating conditions are extremely dusty or sandy.

Oil Type: Detergent oil (API service SF, SG, SH, SJ, or higher)

Crankcase capacity: 56 oz. or 1-3/4 qt. (1.7 l) with filter; 48 oz. or 1-1/2 qt. (1.4 l) without filter

Viscosity: See the table below.

USE THESE SAE VISCOSITY OILS

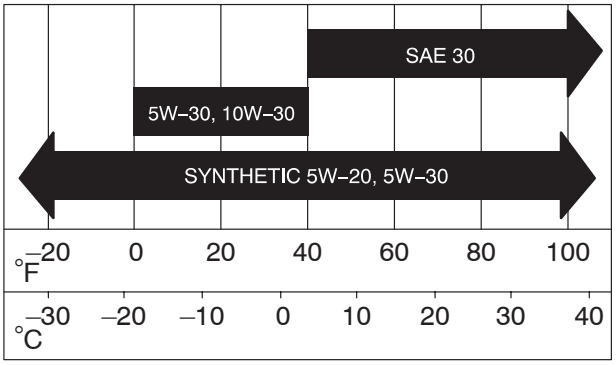

Checking the Oil Level

1. Park the tractor on a level surface.
2. Disengage the blades (PTO).
3. Set the parking brake.
4. Stop the engine and wait for all moving parts to stop.
5. Remove the ignition key.
6. Open the hood.
7. Clean around the oil dipstick (Fig. 18) so that dirt cannot fall into the filler hole and damage the engine.

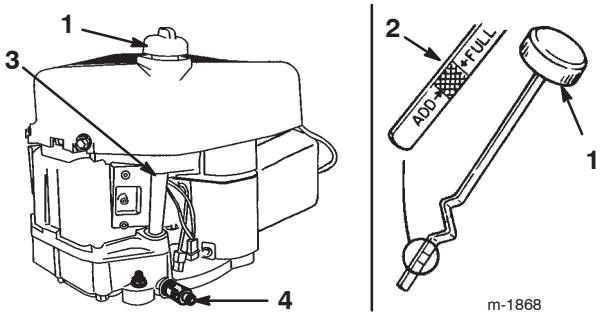

Figure 18

1. Oil dipstick
2. Metal end
3. Filler tube
4. Oil drain valve

8. Unscrew the oil dipstick and wipe the metal end clean (Fig. 18).
9. Screw the oil dipstick fully onto the filler tube (Fig. 18).
10. Unscrew the dipstick again and look at the metal end. If the oil level is low, slowly pour only enough oil into the filler tube to raise the level to the Full mark on the dipstick.

Important Do not overfill the crankcase with oil and run the engine; engine damage may result.

Changing the Oil

1. Start the engine and let it run for 5 minutes.

   Note: This warms the oil so that it drains better.
2. Park the tractor so that the drain side is slightly lower than the other side to ensure that the oil drains completely.
3. Disengage the blades (PTO).
4. Set the parking brake.
5. Stop the engine and wait for all moving parts to stop.
6. Remove the ignition key.
7. Slide the drain hose over the drain valve.
8. Place a pan below the drain hose.

9. Rotate oil drain valve to allow oil to drain (Fig. 19).

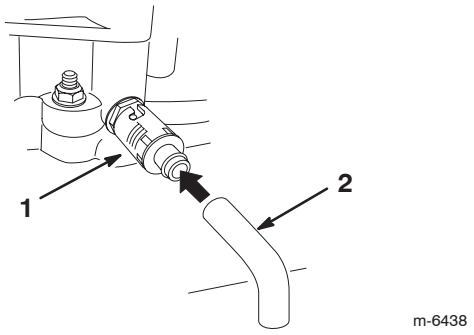

Figure 19

1. Oil drain valve
2. Oil drain tube

10. When oil has drained completely, close the drain valve.

11. Remove the drain hose (Fig. 19).

Note: Recycle the used oil properly.

12. Clean around the oil dipstick and unscrew the cap (Fig. 18).

13. Slowly pour approximately 80% of the engine oil into the filler tube (Fig. 18). Refer to Servicing the Engine Oil on page 23.

14. Check the oil level; refer to Checking the Oil Level on page 23.

15. Slowly add additional oil to bring it to the Full mark.

Servicing the Brake

The brake is located on the right side of the rear axle, inside the rear tire (Fig. 20).

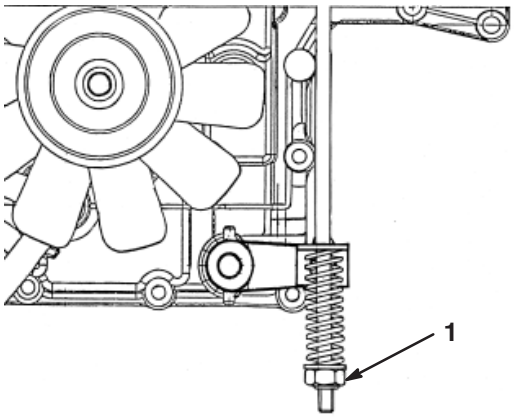

Figure 20

1. Brake adjusting nut

If the tractor takes more than 1 meter (3 ft.) to stop at high speed in the highest gear, adjust the brake.

Checking the Brake

1. Park the tractor on a level surface.

2. Disengage the blades (PTO).

3. Set the parking brake.

4. Stop the engine and wait for all moving parts to stop.

5. Remove the ignition key.

6. Pull the drive control out to the Push position (Fig. 14).

7. If the rear wheels lock and skid when you push the tractor forward, you do not need to adjust the brake. If the wheels turn and do not lock, adjust the brake; refer to Adjusting the Brake below.

Adjusting the Brake

1. Check the brake before you adjust it; refer to Checking the Brake above.

2. Ensure that the drive control is in the Operate position (Fig. 14) and that the parking brake is on.

3. Turn the brake adjusting nut clockwise until you cannot push the tractor (Fig. 20).

4. Release the parking brake and ensure that the rear wheels rotate freely when you push the tractor. If they do not, turn the brake adjusting nut counterclockwise just enough so that you can push the tractor.

5. Check the brake operation again; refer to Checking the Brake above.

Checking the Tire Pressure

Maintain the air pressure in the front tires at 120 kPa and in the rear tires at 100 kPa. Check the pressure at the valve stem (Fig. 21) after every 25 operating hours or yearly, whichever comes first. Check the tires when they are cold to get the most accurate pressure reading.

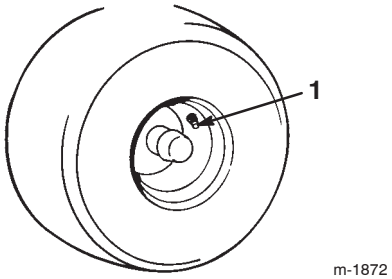

Figure 21

1. Valve stem

Greasing and Lubricating the Tractor

Grease the tractor with a general-purpose grease after every 25 operating hours or once a year, whichever occurs first. Grease the tractor more frequently when the operating conditions are extremely dusty or sandy.

How to Grease the Tractor

1. Disengage the blades (PTO).
2. Set the parking brake.
3. Stop the engine and wait for all moving parts to stop.
4. Remove the ignition key.
5. Clean the grease fittings with a rag. Scrape any paint off the front of the fittings.
6. Connect a grease gun to each fitting and pump grease into it.
7. Wipe up any excess grease.

Where to Add Grease

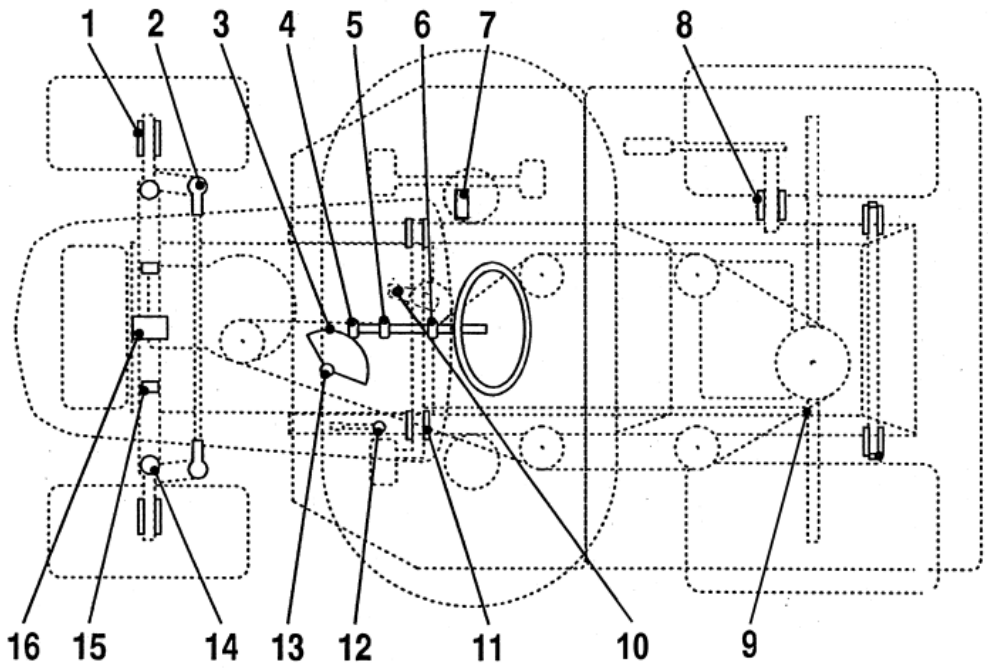

Figure 22

Lubrication List

Item	Name	Quantity	Interval (hours)	Lubricant
1	Front wheels—grease fittings	2	25	Grease
2	Steering ball joints	4	50	Oil
3	Steering sector gear	1	50	Grease
4	Steering pinion gear	1	25	Grease
5	Steering shaft bearing	1	50	Oil
6	Steering shaft bearing	1	50	Oil
7	Motion lever—grease fitting	1	50	Grease
8	Shaft hub for lifting the mower housing	1	50	Oil
9	Motion link ball joints	4	50	Oil
10	Brake pedal hubs	2	50	Oil
11	Parking brake ring	1	50	Oil
12	Steering bearing	1	25	Grease
13	Left and Right Spindle—grease fittings	2	25	Grease
14	Mower housing hinged pins	6	When removed	Grease
15	Front axle pivot pins	2	When removed	Grease
16	Front axle pivot pins	2	25	Grease

Replacing the Fuse

The electrical system is protected by fuses. They are located beneath the hood, near the fuel tank (Fig. 23). If a fuse goes out, check the circuit wiring for a short.

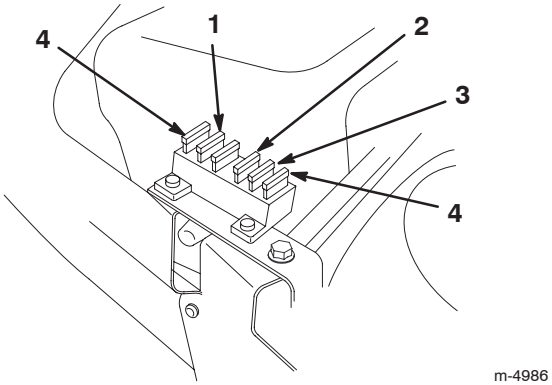

Figure 23

1. Main/ battery
2. Interlock, electric clutch, and cruise control
3. Full bag buzzer
4. Extra fuse

To replace a fuse, pull up to remove it from the socket. Push down to insert it.

- Main/ Battery—15 amp
- Interlock, electric clutch, and cruise control—10 amp
- Full bag buzzer—5 amp

Servicing the Battery

Check the electrolyte level in the battery before each use. Always keep the battery clean and fully charged. Use a paper towel to clean the battery and battery box. If the battery terminals are corroded, clean them with a solution of 4 parts water and 1 part baking soda. Apply a light coating of grease to the battery terminals to prevent them from corroding.

Battery voltage and amperage: 12 volts, 190 cold cranking amps

Removing the Battery

Warning

Battery terminals or metal tools could short against metal tractor components causing sparks. Sparks can cause the battery gasses to explode, resulting in personal injury.

- **When removing or installing the battery, do not allow the battery terminals to touch any metal parts of the tractor.**
- **Do not allow metal tools to short between the battery terminals and the metal parts of the tractor.**

1. Disengage the blades (PTO).
2. Set the parking brake.
3. Stop the engine and wait for all moving parts to stop.
4. Remove the ignition key.
5. Open the hood to see the battery (under the dash panel).
6. Lift the rubber cover up off the negative (black) cable.
7. Disconnect the negative (black) ground cable from the battery post (Fig. 24).

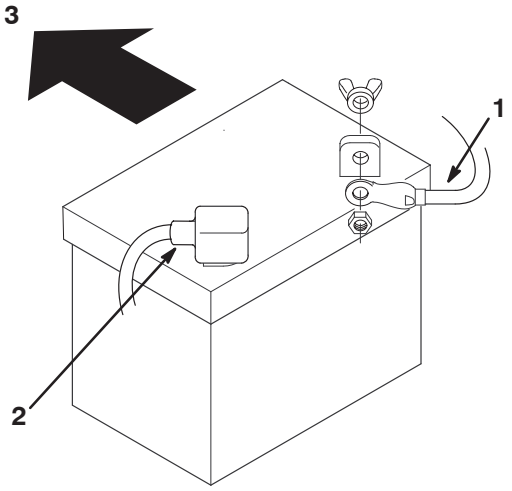

Figure 24

1. Negative cable (black), boot not shown for illustrative purposes
2. Positive cable (red)
3. Front of machine

Warning

Routing the battery cables improperly could damage the tractor and cables, causing sparks. Sparks can cause the battery gasses to explode, resulting in personal injury.

- **Always *disconnect* the negative (black) battery cable before disconnecting the positive (red) cable.**
- **Always *connect* the positive (red) battery cable before connecting the negative (black) cable.**

8. Lift the rubber cover up off the positive (red) cable.

9. Disconnect the positive (red) cable from the battery post (Fig. 24).

10. Remove the battery hold down rod.

11. Remove the battery from the chassis.

Installing the Battery

1. Place the battery into the chassis with the battery posts toward the rear of the tractor (Fig. 24).

2. Secure the battery in the chassis with the hold down rod.

3. Using the bolt and wing nut, connect the positive (red) cable to the positive (+) battery post (Fig. 24). Slide the rubber cover over the battery post.

4. Using the bolt and wing nut, connect the negative (black) cable to the negative (–) battery post (Fig. 24). Slide the rubber cover over the battery post.

Checking the Electrolyte Level

1. Tip the seat forward to see the battery.

2. Remove the filler caps. If the electrolyte is not up to the lower part of the tube (Fig. 25), add the required amount of distilled water; refer to Adding Water to the Battery on page 28.

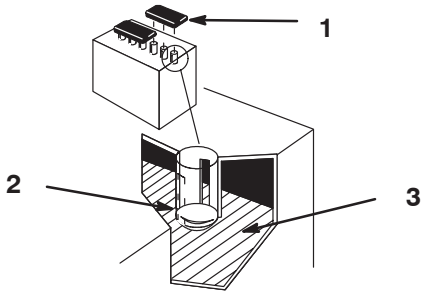

Figure 25

1. Filler caps
2. Lower part of tube
3. Plates

Danger

Battery electrolyte contains sulfuric acid which is a deadly poison and causes severe burns.

- **Do not drink electrolyte and avoid contact with skin, eyes or clothing. Wear safety glasses to shield your eyes and rubber gloves to protect your hands.**
- **Fill the battery where clean water is always available for flushing the skin.**

Adding Water to the Battery

The best time to add distilled water to the battery is just before you operate the tractor. This lets the water mix thoroughly with the electrolyte solution.

1. Clean the top of the battery with a paper towel.

2. Remove the filler caps (Fig. 25).

3. Slowly pour distilled water into each battery cell until the level is up to the lower part of the tube (Fig. 25).

Important Do not overfill the battery. Electrolyte (sulfuric acid) can severely corrode and damage the chassis.

4. Replace the filler caps.

Charging the Battery

Warning

Charging the battery produces gasses that can explode.

Never smoke near the battery and keep sparks and flames away from the battery.

Important Always keep the battery fully charged (1.260 specific gravity), especially below 32°F (0°C) to prevent battery damage.

1. Remove the battery from the chassis; refer to Removing the Battery on page 27.
2. Check the electrolyte level; refer to Checking the Electrolyte Level on page 28.
3. Remove the filler caps from the battery and connect a 2 amp battery charger to the battery posts.
4. Charge the battery at a rate of 2 amps or less for 4 hours (12 volts). **Do not overcharge the battery.**
5. When the battery is fully charged, install the filler caps.
6. Install the battery in the chassis; refer to Installing the Battery on page 28.

Servicing the Spark Plug

Check the spark plug after every 25 operating hours. Install a new **Champion RC12YC or equivalent** spark plug after every 100 operating hours. Ensure that the air gap between the center and side electrodes is 0.030 in. (0.76 mm) before installing the spark plug. Use a spark plug wrench for removing and installing the spark plug and a gapping tool or feeler gauge to check and adjust the air gap.

Removing the Spark Plug

1. Disengage the blades (PTO).
2. Set the parking brake.
3. Stop the engine and wait for all moving parts to stop.
4. Remove the ignition key.
5. Open the hood.
6. Disconnect the wire from the spark plug (Fig. 26).

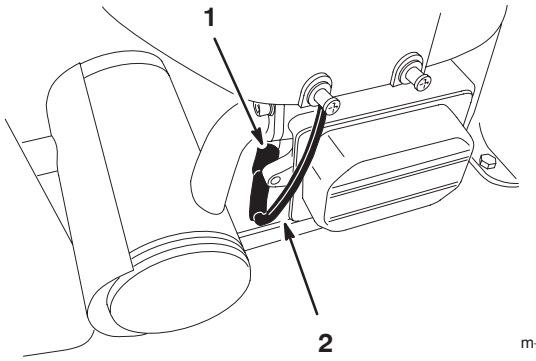

Figure 26

1. Spark plug
2. Spark plug wire

7. Clean around the spark plug to prevent dirt from falling into the engine and potentially causing damage.
8. Remove the spark plug and metal washer (Fig. 26).

Checking the Spark Plug

1. Look at the center of the spark plug (Fig. 27). If you see light brown or gray on the insulator, the engine is operating properly. A black coating on the insulator usually means that the air cleaner is dirty.

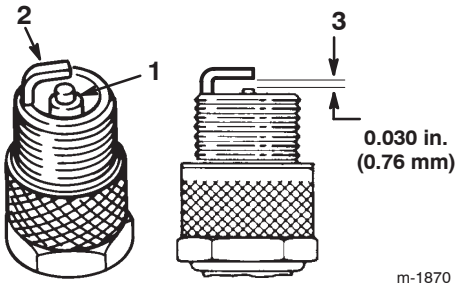

Figure 27

1. Center electrode insulator
2. Side electrode
3. Air gap (not to scale)

Important **Do not clean the spark plug.** Always replace the spark plug when it has a black coating, worn electrodes, an oily film, or cracks.

2. Check the gap between the center and side electrodes (Fig. 27) and bend the side electrode if the gap is not correct.

Installing the Spark Plug

1. Install the spark plug and metal washer. Ensure that the air gap is set correctly.
2. Tighten the spark plug to 15 ft-lb (20.4 N·m).
3. Connect the wire to the spark plug (Fig. 26).
4. Close the hood.

Draining the Fuel Tank

Drain the fuel tank when you will not be using the tractor for more than 30 days.

Danger

In certain conditions, gasoline is extremely flammable and highly explosive. A fire or explosion from gasoline can burn you and others and can damage property.

- **Drain gasoline from the fuel tank when the engine is cold. Do this outdoors in an open area. Wipe up any gasoline that spills.**
- **Never smoke when draining gasoline, and stay away from an open flame or where a spark may ignite the gasoline fumes.**

1. Park the tractor so that the left front side is slightly lower than the right side to ensure that the fuel tank drains completely.
2. Disengage the blades (PTO).
3. Set the parking brake.
4. Stop the engine and wait for all moving parts to stop.
5. Remove the ignition key.
6. Close the fuel shut-off valve located under the front of the fuel tank.
7. Loosen the hose clamp at the fuel filter and slide it up the fuel line away from the fuel filter (Fig. 28).

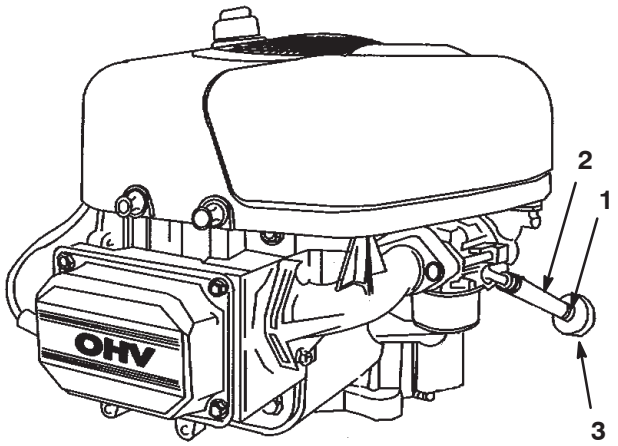

Figure 28

1. Hose clamp
2. Fuel line
3. Fuel filter

8. Pull the fuel line off the fuel filter (Fig. 28).
9. Open the fuel shut-off valve and allow the gasoline to drain into an approved fuel container or a drain pan.

Note: Now is the best time to install a new fuel filter because the fuel tank is empty.

10. Install the fuel line onto the fuel filter.
11. Slide the hose clamp close to the fuel filter to secure the fuel line (Fig. 28).

Replacing the Fuel Filter

Replace the fuel filter after every 100 operating hours or yearly, whichever occurs first. The best time to replace the fuel filter (Fig. 28) is when the fuel tank is empty. Never install a dirty fuel filter after it has been removed from the fuel line.

1. Park the tractor on a level surface.
2. Disengage the blades (PTO).
3. Set the parking brake.
4. Stop the engine and wait for all moving parts to stop.
5. Remove the ignition key.
6. Close the fuel shutoff valve (Fig. 29).

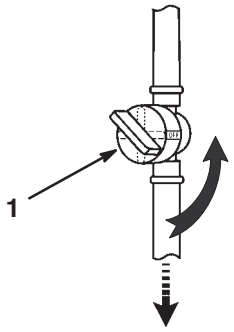

Figure 29

1. Fuel shut-off valve

7. Squeeze the ends of the hose clamps together and slide them away from the old fuel filter (Fig. 28).
8. Remove the old fuel filter from the fuel line.
9. Install a new fuel filter and move the hose clamps close to it.
10. Open the fuel shutoff valve.

Servicing the Air Cleaner

Clean and oil the foam element after every 25 operating hours. Replace the paper element after every 100 operating hours or yearly, whichever occurs first.

Note: Service the air cleaner more frequently if the operating conditions are extremely dusty or sandy.

1. Park the tractor on a level surface.
2. Disengage the blades (PTO).
3. Set the parking brake.
4. Stop the engine and wait for all moving parts to stop.
5. Remove the ignition key.

Removing the Foam and Paper Elements

1. Clean around the air cleaner to prevent dirt from getting into the engine and causing damage.
2. Pull up on the air cleaner cover handle and rotate it toward the engine (Fig. 30).

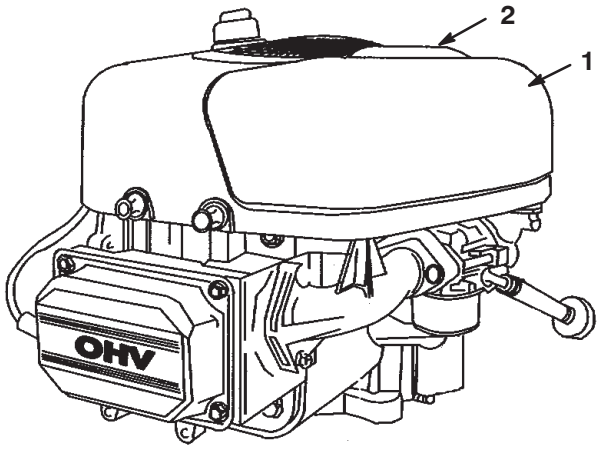

Figure 30

1. Air cleaner cover
2. Air cleaner cover handle

3. Remove the air cleaner cover.

4. Carefully slide the paper element and the foam element from the blower housing (Fig. 31).

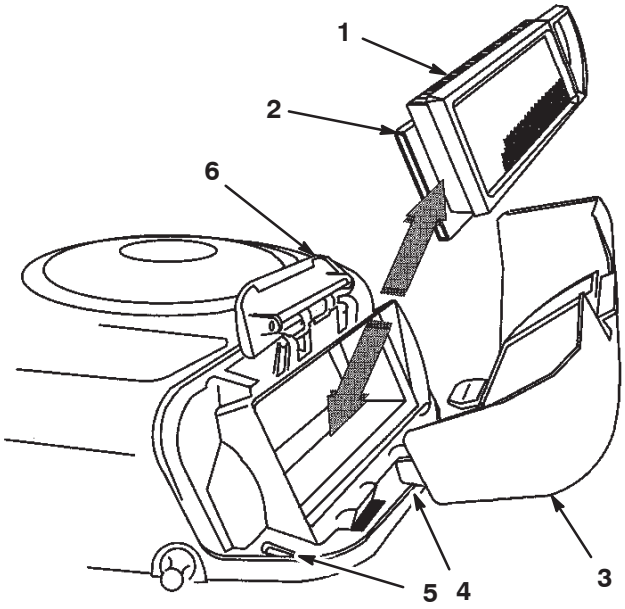

Figure 31

1. Paper element
2. Foam element
3. Air cleaner cover
4. Tab
5. Slot
6. Blower housing

Cleaning the Foam and Paper Elements

Foam Element

1. Wash the foam element in liquid soap and warm water and rinse it thoroughly.
2. Dry the element by squeezing it in a clean cloth.

   Note: Do not oil the foam element.

Important Replace the foam element if it is torn or worn.

Paper Element

1. Lightly tap the paper element on a flat surface to remove dust and dirt.
2. Inspect the element for tears, an oily film, and damage to the rubber seal.

Important Never clean the paper element with pressurized air or liquids, such as solvents, gasoline, or kerosene. Replace the paper element if it is damaged or cannot be cleaned thoroughly.

Installing the Foam and Paper Elements

Important To prevent engine damage, always operate the engine with the complete foam and paper air cleaner assembly installed.

1. Place the foam element and paper element into the blower housing.

Note: Ensure that the rubber seal is flat against the air cleaner base.

2. Align the tabs on the air cleaner cover with the slots of the blower housing (Fig. 31). Hook the handle onto the cover and press down on the handle to lock the cover in place.

Servicing the Blades

The Toro bullhorn logo is a registered trademark of the Toro Company. It identifies the component it appears on as a geniune Toro part. The logo, depicted below, appears on geniune Toro cutting blades.

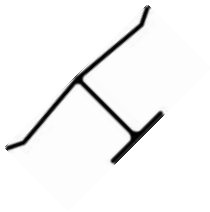

Note: Determine the left and right sides of the machine from the normal operating position.

To ensure a superior quality of cut, keep the blades sharp. For convenient sharpening and replacement, keep extra blades.

Danger

Worn or damaged blades can break and a piece of a blade could be thrown into the operator's or bystander's area, resulting in serious personal injury or death.

- **Inspect the blades periodically for wear or damage.**
- **Replace worn or damaged blades.**

Inspecting the Blades

1. Remove the mower; refer to Removing the Mower on page 34.
2. Inspect the cutting edges (Fig. 32). If the edges are not sharp or have nicks, remove the blades and sharpen them; refer to Sharpening the Blades on page 33.

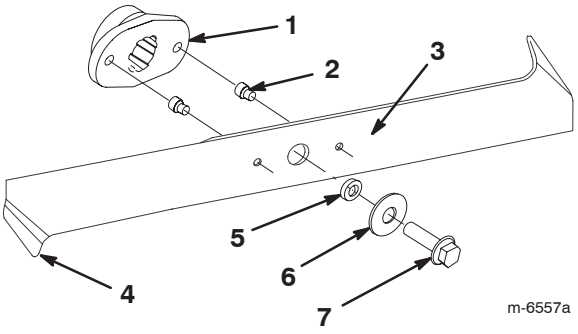

Figure 32

1. Blade driver
2. Shear pin (2)
3. Blade
4. Bent edge
5. Spacer
6. Washer
7. Bolt

3. Inspect the blades, especially the bent edges (Fig. 32). If you notice any wear or damage in this area, immediately install new blades.
4. If the shear pins are broken, replace them immediately (Fig. 32).

Important If the shear pins are broken, the mower belt may be damaged. Inspect the belt; refer to Adjusting the Blade Drive Belt on page 35.

Removing the Blades

1. Remove the mower; refer to Removing the Mower on page 34.
2. Carefully tip the mower over.
3. Remove the bolts, washers, and blades (Fig. 32). Wedge a block of wood between each blade and the mower to lock the blade when you are removing each bolt.

Note: The right blade has a left-hand threaded bolt.

4. Inspect all parts; replace any that are worn or damaged.

Sharpening the Blades

1. Use a file to sharpen the cutting edge at both ends of each blade (Fig. 33). Maintain the original angle. The blade retains its balance if you remove the same amount of material from both cutting edges.



Figure 33

1. Sharpen at original angle

2. Check the balance of each blade by putting it on a blade balancer (Fig. 34). If the blade stays in a horizontal position, the blade is balanced and can be used. If the blade is not balanced, file some metal off the back side of the blade. Repeat this step until each blade is balanced.

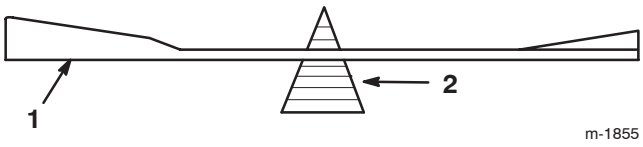

Figure 34

1. Blade
2. Balancer

Installing the Blades

1. Install the blades, washers, and blade bolts (Fig. 32).

Important The bent edges of the blades must be pointing toward the top of the mower to ensure proper cutting.

2. Position the blades 90 degrees to each other (Fig. 35).

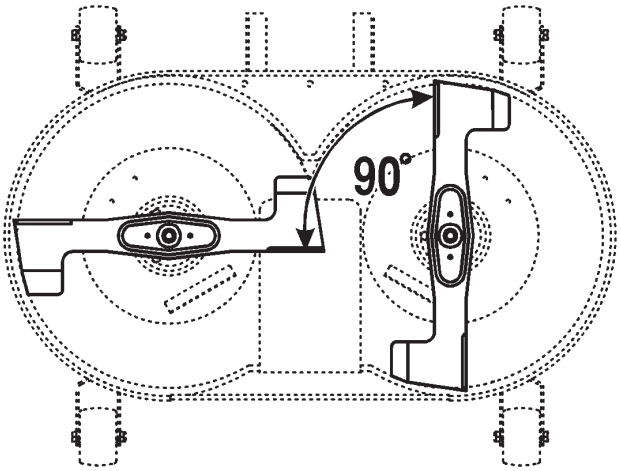

Figure 35

3. Tighten the blade bolts to 37 ft-lb (50 N·m).

Removing the Mower

1. Park the tractor on a level surface.

2. Disengage the blades (PTO).

3. Set the parking brake.

4. Stop the engine and wait for all moving parts to stop.

5. Remove the ignition key.

6. Disconnect the wire from the spark plug.

7. Move the height-of-cut lever to the lowest position.

8. Pull the idler arm assembly in and remove the V-belt from the pulley (Fig. 36).

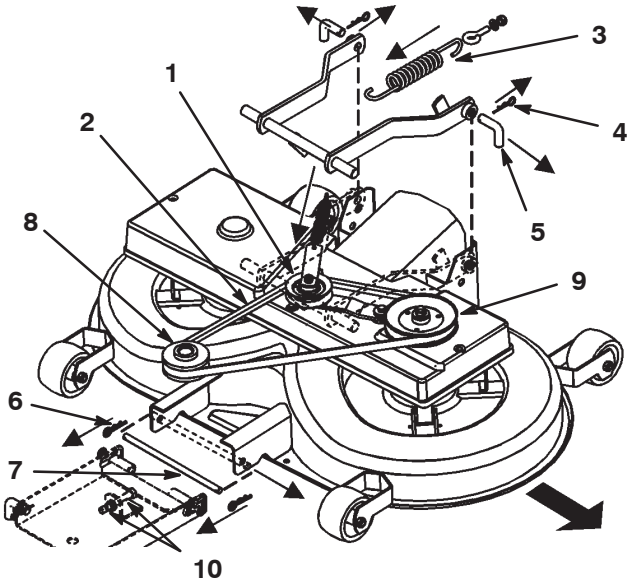

Figure 36

1. Idler pulley and idler arm assembly
2. V-belt
3. Engagement spring
4. Rear hairpin clips
5. Rear pins
6. Front hairpin clips
7. Front pin
8. Engine pulley
9. V-belt pulley
10. Front suspension M12 nuts
11. Bag-on-demand assembly (not shown)

Note: The bag-on-demand assembly is not shown for the purpose of clarity.

9. Disconnect the spring from the engagement lever (Fig. 36).

10. Release the mower from the tunnel by lifting the tunnel off the 2 welded pins and pulling the tunnel rearward approximately 4 in. (10 cm). Secure the tunnel to prevent it from falling down.

11. Remove the hairpin clips from the 2 rear pins and remove the pins (Fig. 36).

Note: You may need a pliers to pull out the second pin.

12. Remove the hairpin clip from the front pin and remove the pin (Fig. 36).

13. Remove the V-belt from the engine pulley (Fig. 36).

14. Slide the mower out from beneath the tractor.

Installing the Mower

Reverse the procedure for Removing the Mower on page 34.

Adjusting the Blade Drive Belt

Adjust the blade drive belt after the first 20 operating hours and every 50 operating hours thereafter.

1. Remove the mower; refer to Removing the Mower on page 34.

   Note: You must remove the mower to adjust the blade drive belt properly.

2. Remove the V-belt pulley and the idler arm assembly (Fig. 36).
3. Remove the belt cover.
4. Loosen the 2 hex nuts on the idler pulley (Fig. 37).

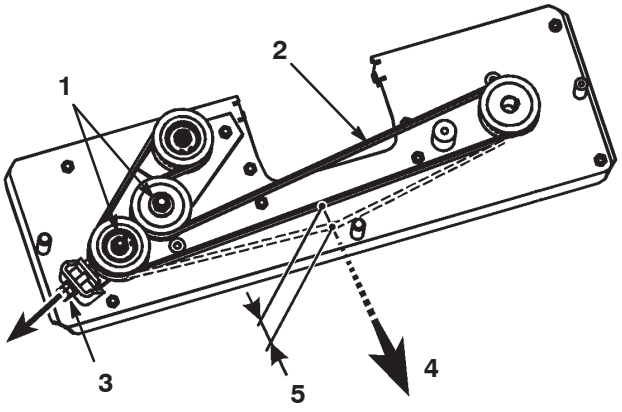

Figure 37

Top View

1. Hex nuts
2. Mower belt
3. M10 nut
4. 30 N of force
5. 5 mm

5. Adjust the M10 nut until the belt flexes 5 mm with 30 N of force (Fig. 37).
6. Rotate the belt 3 revolutions.
7. Check the belt tension and adjust it if necessary.
8. Tighten the 2 hex nuts on the idler pulley.
9. Install the mower; refer to Installing the Mower on page 34.

Adjusting the Height Adjustment Cable Rod Assembly

Check the front-to-rear blade slope every 100 hours, yearly, or any time you install the mower. Before you check the slope, inflate the front and rear tires to the recommended air pressure; refer to Checking the Tire Pressure on page 24. If the front of the mower is not within 4 to 11 mm (1/8 to 3/8 in.) lower than the rear of the mower, adjust the blade slope.

1. Park the tractor on a level surface.
2. Disengage the blades (PTO).
3. Set the parking brake.
4. Stop the engine and wait for all moving parts to stop.
5. Remove the ignition key.
6. Disconnect the wire from the spark plug.
7. Move the lower pin of the front adjustment suspension into the bottom position of the slotted holes by adjusting the 2 nuts (M12) on the front suspension (Fig. 36).
8. Move the height-of-cut lever to position 1.

   Note: The front mower gauge wheels must rest on the ground.

9. Adjust the M8 locknut at the end of the height adjustment rod assembly until the rod is slightly taut (Fig. 38).

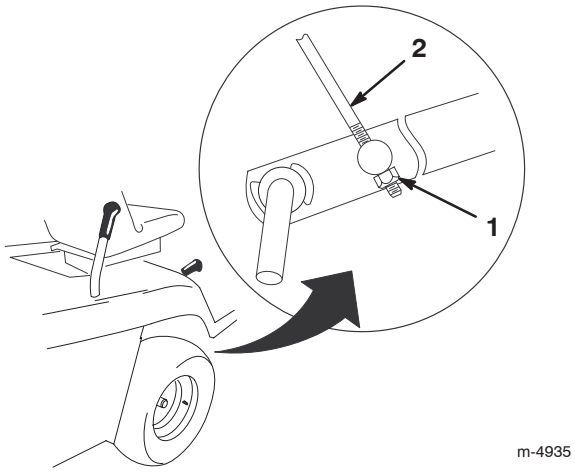

Figure 38

1. M8 locknut
2. Height adjustment rod

Servicing the Grass Collector

Removing the Grass Collector

1. Use 2 hands to tip the grass collector forward (Fig. 39).

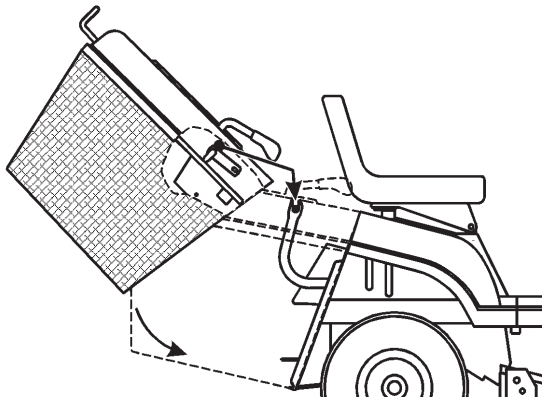

Figure 39

2. Carefully slide the assembly rearward off the support brackets.

Installing the Grass Collector

1. Lift the grass collector assembly with 2 hands.
2. Tip the collector forward approximately 40 degrees and slide it onto the 2 support brackets at the rear of the tractor (Fig. 39).

Note: Ensure that the arrow on the top of the grass collector aligns with the arrow on the tractor. The mower will not function when the grass collector is not in place.

Cleaning the Grass Collector and Tunnel

If the holes on the grass collector bag become clogged with dirt and grass or if the full-bag sensor is dirty, clean the collector.

1. Disengage the blades (PTO).
2. Set the parking brake.
3. Stop the engine and wait for all moving parts to stop.
4. Remove the ignition key.
5. Remove the grass collector; refer to Removing the Grass Collector on page 36.
6. Clean the collector bag with pressurized water.
7. Wipe the area around the full-bag sensor.
8. Ensure that the bag on demand is in the bagging mode and clean the inside of the tunnel all the way to the mower.
9. Install the grass collector; refer to Installing the Grass Collector on page 36.

Note: Allow the bag to dry thoroughly before installing it.

Cleaning and Storing the Tractor

1. Disengage the blades (PTO).
2. Set the parking brake.
3. Stop the engine and wait for all moving parts to stop.
4. Remove the ignition key.
5. Remove the grass collector and clean it; refer to Grass Collector on page 36.
6. Remove grass clippings, dirt, and grime from the external parts of the entire tractor, especially the engine. Clean the dirt and chaff from the outside of the engine cylinder head fins and blower housing.

Important You can wash the tractor with a mild detergent and water. Do not use pressurized liquids to wash the tractor. Pressurized liquids may damage the electrical system or wash away necessary grease at the friction points. Avoid using water excessively, especially near the control panel, lights, engine, and battery.

7. Check the brake; refer to Brake on page 24.
8. Service the air cleaner; refer to Servicing the Air Cleaner on page 31.
9. Grease the chassis; refer to Greasing and Lubricating the Tractor on page 25.
10. Change the engine oil and filter; refer to Servicing the Engine Oil on page 23.
11. Check the tire pressure; refer to Checking the Tire Pressure on page 24.
12. When storing the tractor over 30 days, prepare it as follows:

    A. Add a petroleum-based stabilizer/conditioner to the fuel in the tank according to the instructions from the stabilizer manufacturer. **Do not use an alcohol-based stabilizer (ethanol or methanol).**

    Note: A fuel stabilizer/conditioner is most effective when mixed with fresh gasoline and used at all times.

    B. Run the engine for 5 minutes to distribute the conditioned fuel through the fuel system.

    C. Stop the engine, allow it to cool, and drain the fuel tank; refer to Draining the Fuel Tank on page 30.

    D. Start the engine and run it until it stops.

    E. Choke or prime the engine.

    F. Start and run the engine until it will not start again.

G. Recycle the old fuel according to local codes.

H. Close the fuel shut-off valve.

Important Do not store stabilizer/conditioned gasoline over 90 days.

13. Remove and inspect the spark plug; refer to Servicing the Spark Plug on page 29. With the spark plug removed from the engine, pour 2 tablespoons of engine oil into the spark plug hole. Use the electric starter to crank the engine and distribute the oil inside the cylinder. Install the spark plug, but do not connect the wire to the spark plug.

14. Disconnect the negative battery cable. Clean the battery and battery terminals. Check the electrolyte level and charge it fully; refer to Servicing the Battery on page 27. Leave the negative battery cable disconnected from the battery during storage.

Important The battery must be fully charged to prevent it from freezing and being damaged at temperatures below 32°F (0°C). You can store a fully charged battery during the winter without recharging.

15. Check and tighten all bolts, nuts, and screws. Repair or replace any part that is worn or damaged.

16. Paint all scratched or bare metal surfaces with paint available from an Authorized Service Dealer.

17. Store the tractor in a clean, dry garage or storage area. Remove the ignition and KeyChoice keys from the mower and keep them in a memorable place. Cover the tractor to protect it and keep it clean.

Troubleshooting

Problem	Possible Causes	Corrective Action
The starter does not crank.	1. The blade control (PTO) knob is engaged. 2. The parking brake is not on. 3. The battery is dead. 4. The electrical connections are corroded or loose. 5. A fuse is blown. 6. A relay or switch is damaged.	1. Move the blade control (PTO) knob to the Disengaged position. 2. Set the parking brake. 3. Charge the battery. 4. Check the electrical connections for good contact. 5. Replace the fuse. 6. Contact an Authorized Service Dealer.
The engine overheats.	1. The engine load is excessive. 2. The oil level in the crankcase is low. 3. The cooling fins and air passages under the engine blower housing are plugged.	1. Reduce the ground speed. 2. Add oil to the crankcase. 3. Remove the obstruction from the cooling fins and air passages.
The tractor does not drive.	1. The drive control is in the Push position. 2. The traction belt is worn, loose, or broken. 3. The traction belt is off the pulley.	1. Move the drive control to the Operate position. 2. Contact an Authorized Service Dealer. 3. Contact an Authorized Service Dealer.
The engine will not start, starts hard, or fails to keep running.	1. The operator is not seated. 2. The fuel tank is empty. 3. The air cleaner is dirty. 4. The spark plug wire is loose or disconnected. 5. A spark plug is pitted, fouled, or the gap is incorrect. 6. The choke is not closing. 7. There is dirt in the fuel filter. 8. The idle speed is too low or the mixture is incorrect. 9. Dirt, water, or stale fuel is in the fuel system. 10. The fuel shut-off valve is closed.	1. Sit on the seat. 2. Fill the fuel tank with gasoline. 3. Clean or replace the air cleaner element. 4. Install the wire on the spark plug. 5. Install a new, correctly-gapped spark plug. 6. Adjust the throttle cable. 7. Replace the fuel filter. 8. Adjust the carburetor idle speed and idle mixture. 9. Contact an Authorized Service Dealer. 10. Open the fuel shut-off valve.

Problem	Possible Causes	Corrective Action
The engine loses power.	1. The engine load is excessive. 2. The air cleaner is dirty. 3. The oil level in the crankcase is low. 4. The cooling fins and air passages under the engine blower housing are plugged. 5. The spark plug is pitted, fouled, or the gap is incorrect. 6. The vent hole in the fuel cap is plugged. 7. There is dirt in the fuel filter. 8. Dirt, water, or stale fuel is in the fuel system.	1. Reduce your ground speed. 2. Clean the air cleaner element. 3. Add oil to the crankcase. 4. Remove the obstruction from the cooling fins and air passages. 5. Install a new, correctly-gapped spark plug. 6. Clean or replace the fuel cap. 7. Replace the fuel filter. 8. Contact an Authorized Service Dealer.
There is abnormal vibration.	1. The blades are bent or unbalanced. 2. The blade mounting screws are loose. 3. The engine mounting bolts are loose. 4. There is a loose engine pulley, idler pulley, or blade pulley. 5. The engine pulley is damaged. 6. The blade drive belt is damaged.	1. Install a new blades. 2. Tighten the blade mounting screws. 3. Tighten the engine mounting bolts. 4. Tighten the appropriate pulley. 5. Contact an Authorized Service Dealer. 6. Install a new blade drive belt.
The blades do not rotate.	1. The blade drive belt is worn, loose, or broken. 2. The blade drive belt is off the pulley. 3. The grass collector is not in place.	1. Install a new blade drive belt. 2. Install the blade drive belt and adjust it for the correct tension. 3. Install the grass collector.
The cutting height is uneven.	1. The tire pressure is incorrect. 2. The mower is not level. 3. The underside of the mower is dirty. 4. The blade mounting screws are loose. 5. The blade drive belt tension is incorrect.	1. Set the tire pressure. 2. Adjust the height adjustment cable rod assembly. 3. Clean the underside of the mower. 4. Tighten the blade mounting screws. 5. Adjust the blade drive belt.

The Toro CE Warranty

Conditions and Products Covered

The Toro® Company and its affiliate, Toro Warranty Company, pursuant to an agreement between them, jointly promises to the original purchaser* to repair any Toro Product used for normal residential purposes* if defective in materials or workmanship. The following time periods apply from the date of original purchase:

Products	Warranty Period
Walk Power Mowers	2-year limited warranty
Rear Engine Riders	2-year limited warranty
Lawn & Garden Tractors	2-year limited warranty
Electric Hand Held Products	2-year limited warranty
Snowthrowers	2-year limited warranty
Consumer Zero Turn	2-year limited warranty

* "Original purchaser" means use the person who originally purchased Toro products.

* "Normal residential purposes"means use of the product on the same lot as your home. Use at more than one location is considered commercial use, and the commercial use warranty would apply.

Limited Warranty for Commercial Use

Toro Consumer Products and attachments used for commercial, institutional, or rental use are warranted against defects in materials or workmanship for the following time periods from the date of original purchase:

Products	Warranty Period
Walk Power Mowers	90 day warranty
Rear Engine Riders	90 day warranty
Lawn & Garden Tractors	90 day warranty
Electric Hand Held Products	90 day warranty
Snowthrowers	90 day warranty
Consumer Zero Turn	45 day warranty

Instructions for Obtaining Warranty Service

If you think that your Toro Product contains a defect in materials or workmanship, follow this procedure:

1. Contact your seller to arrange service of the product. If for any reason it is impossible for you to contact your seller, you may contact any Toro Authorized or Master Service Dealer to arrange service at their dealership. To locate a dealer, refer to your owner's manual or your telephone directory (look under "Lawn Mowers") or access our website at www.Toro.com.
2. Bring the product and your proof of purchase (sales receipt) to your seller or the Service Dealer.

If for any reason you are dissatisfied with the Service Dealer's analysis or with the assistance provided, contact the Toro importer or contact us at:

Customer Care Department, Consumer Division
Toro Warranty Company
8111 Lyndale Avenue South
Bloomington, MN 55420-1196
Manager: Technical Product Support: 001-952-887-8248

See attached Distributor List

Owner Responsibilities

You must maintain your Toro Product by following the maintenance procedures described in the operator's manual. Such routine maintenance, whether performed by a dealer or by you, is at your expense.

Items and Conditions Not Covered

This express warranty does not cover:

- Cost of regular maintenance service or parts, such as filters, fuel, lubricants, tune-up parts, blade sharpening, brake and clutch adjustments.
- Any product or part which has been altered or misused or required replacement or repair due to normal wear, accidents, or lack of proper maintenance.
- Repairs necessary due to improper fuel, contaminants in the fuel system, or failure to properly prepare the fuel system prior to any period of non-use over three months.
- Engine and transmission. These are covered by the appropriate manufacturer's guarantees with separate terms and conditions.

All repairs covered by this warranty must be performed by an Authorized Toro Service Dealer using Toro approved replacement parts.

General Conditions

The purchaser is covered by the national laws of each country. The rights to which the purchaser is entitled with the support of these laws are not restricted by this warranty.