Form No. 3357-829 Rev A

DH 200, DH 210, and DH 220 Lawn Tractors

Model No. 74573—Serial No. 270000001 and Up
Model No. 74582—Serial No. 270000001 and Up
Model No. 74592—Serial No. 270000001 and Up

Setup Instructions

Loose Parts

Note: Use the chart below to verify all parts have been shipped.

Description	Qty.	Use
Steering Wheel	1	Installing the steering wheel
Lock washer	1	
Nut	1	
Seat	1	Installing the seat
Bolts	2	
Flat Washers	2	
Spring Washers	2	
Trailer Hitch	1	Attaching the trailer hitch
Bolts	2	
Nuts	2	
Collector Cover	1	Assembling the grass collector
Grass Collector—Partially Assembled	1	
Grass Bag	1	
Fastener Package	1	
Arrow Decal	1	
Keys	2	Using in the ignition and Key Choice™ switch
Operator's Manual	1	Reading before operating the tractor
Engine Operator's Manual	1	

© 2004—The Toro Company
8111 Lyndale Ave., Bloomington, MN 55420, USA

Printed in the USA
All Rights Reserved

Original Instructions (EN)
Register your product at www.Toro.com

Installing the Steering Wheel

1. Position the front wheels straight ahead.
2. Remove the logo cover by releasing the 3 latches from the back side with a screwdriver.
3. Line up the center spoke toward the seat and position the steering wheel onto the shaft spline (Fig. 1).

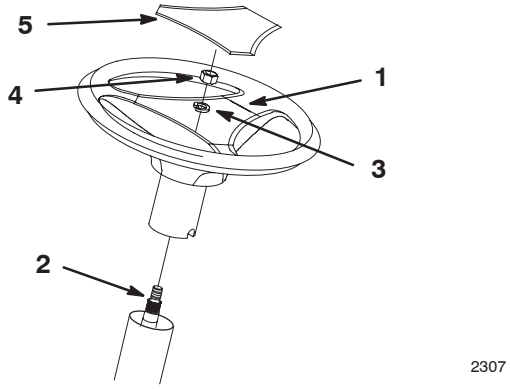

Figure 1

1. Center spoke
2. Shaft spline
3. Lock washer
4. Nut
5. Logo cover

4. Secure the steering wheel with a lock washer and nut (Fig. 1).
5. Torque the steering wheel nut to 50 ft-lb (37 N·m).
6. Snap the logo cover into place (Fig. 1).

Installing the Seat

1. Remove the plastic cover from the seat and discard it.
2. Loosen the two bolts on the tractor seat hinges.
3. Set the seat in place and secure it with the two bolts, spring washers, and flat washers (Fig. 2).

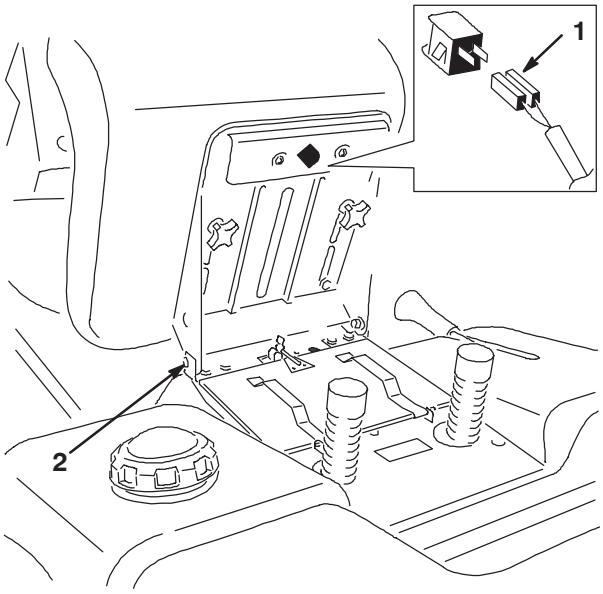

Figure 2

1. Safety switch
2. Bolt and washers

4. Ensure that the safety switch is connected to the seat (Fig. 2).

Attaching the Trailer Hitch

1. Line up the holes in the trailer hitch with the holes in the tractor frame.
2. Attach the hitch with two bolts and nuts (Fig. 3).

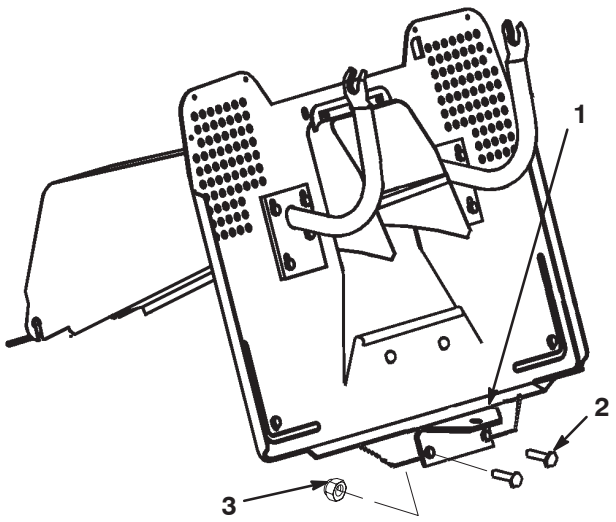

Figure 3

1. Trailer hitch
2. Bolt
3. Nut

Assembling the Grass Collector

1. Tilt the front tube of the partially assembled collector.
2. Align the upper holes with the holes on the upper tube. Loosely fasten the tubes together with the upper bolts (Fig. 4).
3. Place the collector on the rear tractor supports (refer to the *Operator's Manual*) and align the collector frame with the tractor fenders.
4. Tighten the upper bolts (Fig. 4).
5. Stretch the bag and put it over the rear handle (Fig. 4).
6. Insert the bottom tube into the bag (Fig. 4).

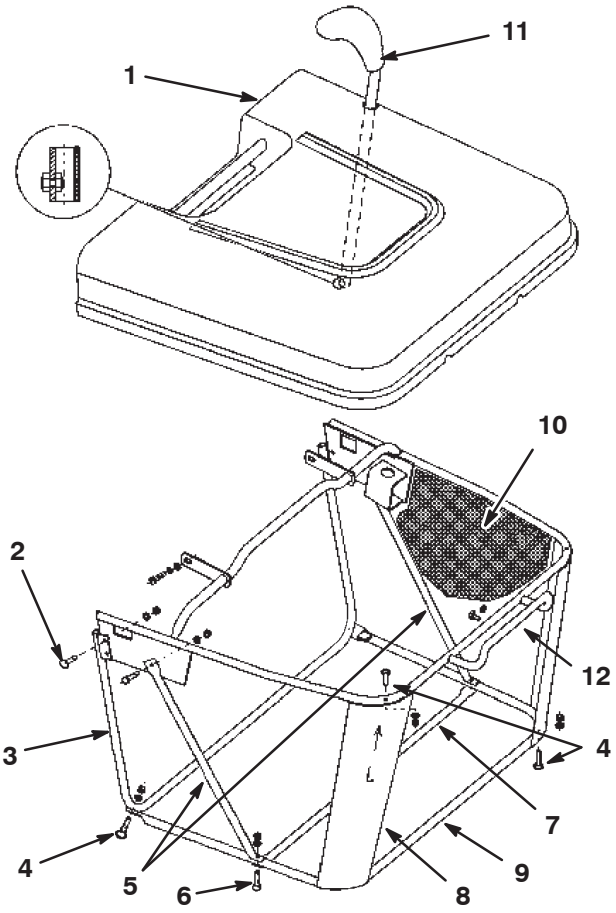

Figure 4

1. Cover
2. Upper bolts
3. Front tube
4. M5 bolts and nuts
5. Left and right supports
6. Screws
7. Lower brace
8. Corner supports
9. Bottom tube
10. Bag
11. Dumping lever
12. Rear handle

7. Insert the corner supports under the top tube.
8. Fasten the corner supports to the top and bottom tubes using the M5 bolts and nuts from under the collector cover (Fig. 4).
9. Fasten the bottom tube to the front tube with M5 bolts and nuts (Fig. 4).
10. Tilt the left and right supports rearward.
11. Place the lower brace on the outside of the bag and secure it to the left and right supports with the screws (Fig. 4).
12. Place the cover on the grass collector.
13. Align the cover with the rear fender by adjusting the rear tractor supports until there is a proper seal between the cover and the collector.

14. Tighten the rear tractor support bolts.

15. Remove the grass collector from the tractor.

16. Tighten all screws securely.

17. Use the plastic extrusions on the bag edges to fix the bag to the frame tube.

18. Insert the dumping lever through the hole of the cover and secure it with the M5 x 12 screw and M5 nut (inside the tube) (Fig. 4).

19. Install the grass collector to the tractor (refer to the *Operator's Manual*).

20. When the grass collector is properly positioned, place the arrow decal directly opposite the arrow symbol on the rear of the tractor.

Checking the Oil Level

The tractor comes from the factory with oil in the engine crankcase; however, it may be necessary to add oil. Refer to the *Operator's Manual* for oil type, viscosity, and crankcase capacity. Add only enough oil to raise the level to the Full mark on the dipstick.

Activating the Battery

1. Remove the battery from the tractor; refer to the *Operator's Manual*.

2. Remove the filler caps from the top of the battery.

Danger

Battery electrolyte contains sulfuric acid that is poisonous (if consumed) and can severely burn you.

- **Do not drink electrolyte.**
- **Avoid contact with skin, eyes or clothing.**
- **Wear safety glasses to shield your eyes and rubber gloves to protect your hands.**
- **Fill the battery where clean water is available for flushing the skin.**
- **Follow all instructions and comply with all safety messages on the electrolyte container.**

3. Slowly pour electrolyte into each cell until the level is up to the lower part of the tube.

4. Leave the filler caps off and connect a 3- to 4-amp battery charger to the battery posts.

5. Charge the battery at a rate of 2 amperes or less for 4 hours (12 volts). **Do not overcharge the battery.** Install the filler caps after the battery is fully charged.

Warning

Charging the battery produces gasses that can explode.

Never smoke near the battery and keep sparks and flames away from the battery.

6. Install the battery in the chassis; refer to the *Operator's Manual*.

Filling the Fuel Tank

Add fuel to the fuel tank; refer to the *Operator's Manual*.

Checking the Tire Pressure

Check front and rear tires for proper inflation; refer to the *Operator's Manual* for the recommended inflation pressure.

Lubricating the Tractor

Ensure that all of the necessary points on the tractor are lubricated; refer to the *Operator's Manual*.

Inserting the Keys into the Switches

The Key Choice switch is located on the right side of seat bracket below the seat.

Checking the Safety System

Refer to the *Operator's Manual*.

Test Driving the Tractor

Ensure that all electrical and mechanical systems are operating properly. Refer to the *Operator's Manual* for how to properly operate the controls.