Form No. 3326-190 Rev. B

TORO®

ProCore 660 and 880 Aerator

Model No. 09701—200000001 and Up
Model No. 09701TE—200000001 and Up
Model No. 09702—200000001 and Up
Model No. 09702TE—200000001 and Up

Operator's Manual

Domestic English (EN)

Contents

	Page
Introduction	2
Safety	3
Safe Operating Practices	3
Safety and Instruction Decals	5
Specifications	7
General Specifications–660 Aerator	7
General Specifications–880 Aerator	7
Performance Specifications	8
Setup	9
Loose Parts Chart	9
Tractor Requirements	9
Ballast Requirements	9
Connect Lower Link Arms	9
Connect Upper Link	10
Install Side Guards	10
Adjust PTO Shaft Length	10
Connect PTO Shaft	11
Mount Castor/Safety Stand	12
Adjusting Sway Links	12
Level Aerator Side–to–side	13
Adjust 3-Point Lift Stop	13
Install Tines/Tine Heads	13
Mount Turf Guards	14
Adjust Roller Scraper	14
Adjust Turf Guards	15
Removing Aerator from Tractor	15
Accessory Chart	16
Accessory Chart	17
Controls	18
Depth Adjustment Handles	18
Depth Guides	18
Operation	19
Adjust Tine Depth	19
Depth Chart Guide	21
Tractor Controls	21
Principles of Operation	21
Training Period	22
Before Aerating	22
Aerating Procedures	22
Transport Operation	22
Inspection and Cleanup after Use	23
Operating Tips	23
Optional Core Windrower	23
Optional Contour Following Kit	23
Maintenance	24
Lubrication	24
Torque Taper Lock Assembly	25
Torque Jackshaft Set Screws	25
Adjusting Belt Tension	25
Replacing Belts	26
Storage	27
The Toro General Commercial Products Warranty	28

Introduction

Read this manual carefully to learn how to operate and maintain your product properly. The information in this manual can help you and others avoid injury and product damage. Although Toro designs and produces safe products, you are responsible for operating the product properly and safely.

Whenever you need service, genuine Toro parts, or additional information, contact an Authorized Service Dealer or Toro Customer Service and have the model and serial numbers of your product ready. Figure 1 illustrates the location of the model and serial numbers on the product.

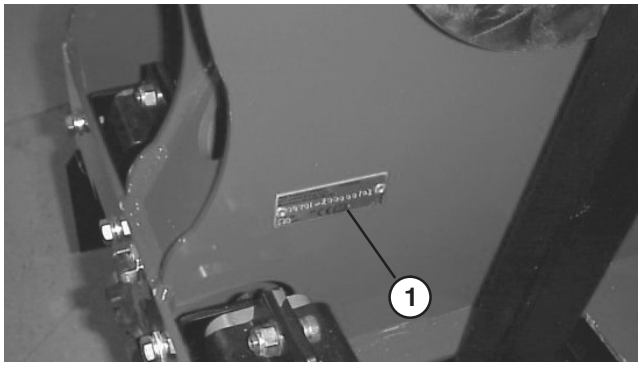

Figure 1

1. Location of the model and serial numbers

Write the product model and serial numbers in the space below:

Model No. _____

Serial No. _____

This manual identifies potential hazards and has special safety messages that help you and others avoid personal injury and even death. ***Danger***, ***Warning***, and ***Caution*** are signal words used to identify the level of hazard. However, regardless of the hazard, be extremely careful.

Danger signals an extreme hazard that *will* cause serious injury or death if you do not follow the recommended precautions.

©2004 by The Toro Company

8111 Lyndale Avenue South
Bloomington, MN 55420-1196

All Rights Reserved

Printed in the USA

Warning signals a hazard that *may* cause serious injury or death if you do not follow the recommended precautions.

Caution signals a hazard that may cause minor or moderate injury if you do not follow the recommended precautions.

This manual uses two other words to highlight information. **Important** calls attention to special mechanical information and **Note:** emphasizes general information worthy of special attention.

Safety

Improper use or maintenance by the operator or owner can result in injury. To reduce the potential for injury, comply with these safety instructions and always pay attention to the safety alert ⚠ symbol, which means CAUTION, WARNING, or DANGER—"personal safety instruction." Failure to comply with the instruction may result in personal injury or death.

Safe Operating Practices

Before Operating

- Owners of this Aerator must give operators and employees full operation and safety instructions before allowing them to operate this machine and at least annually thereafter. An operator who has not read and fully understood all operating and safety instructions is not qualified to operate this machine. Become familiar with all controls and know how to stop quickly.
- Do not allow children to operate the machine. Do not allow adults to operate the machine without proper instruction.
- Remove all debris or other objects that might interfere with operation. Keep all bystanders away from the work area.
- Locate and mark all under ground obstructions such as irrigation components, electrical or telephone lines.
- Make sure tractor is in neutral and hand brake applied before starting. Refer to Tractor Operator's Manual for safe starting procedures.
- To maintain full steering control, add front end weights to tractor. Refer to Tractor Operator's Manual for weight requirements.
- Keep all shields and safety devices in place. If a shield, safety device or decal is damaged, repair or replace it before operation is commenced. Also tighten any loose nuts, bolts and screws to ensure machine is in safe operating condition.
- Do not operate machine while wearing sandals, tennis shoes, sneakers or shorts. Also, do not wear loose fitting clothing which could get caught in moving parts. Always wear long pants and substantial shoes. Wearing safety glasses, safety shoes, ear protection and a helmet is advisable and may be required by some local ordinances and insurance regulations.

While Operating

- Keep all bystanders and pets away from the work area.
- Using the machine demands attention, and to prevent loss of control:
  - Use only in daylight or when there is good artificial light.
  - Watch for holes or other hidden hazards.
  - Do not transport machine close to a sand trap, ditch, creek or other hazard.
  - Reduce speed on side hills and before making sharp turns to prevent tipping or loss of control.
  - Look behind the aerator before backing up.
- If the tines strike a solid object or the machine vibrates abnormally, shut the engine off. Remove key from ignition switch. Check aerator and traction unit for damage. Repair any damage before restarting the engine and operating the tines. Be sure tines are in good condition and all bolts are tight.
- Before leaving machine unattended, disengage power to aerator, lower aerator and set parking brake. Stop engine.
- Never dismount while tractor is in motion. Never get on or off tractor while engine is running and PTO drive shaft is engaged. Never step over PTO shaft to reach other side of aerator – walk around the machine.
- Park aerator on a hard, level surface, install rear support/safety stand and chock roller before disconnecting from tractor.
- If it is necessary to probe below the soil surface, use a non conductive material to prevent electrical shock in case electrical wires are present.

Transporting

- Be sure you are in compliance with all regulations regarding transporting equipment on the public roads and highways.
- Ensure that all reflectors and lights required are in place and are clean and visible by overtaking and oncoming traffic.
- Never allow anyone to ride on the machine during transport.

- Reduce speed on rough roads and surfaces.
- Independent brakes should **always** be locked together when on the road.

PTO Shaft

- For all PTO shaft steel parts (tubes, bearings, joints etc). disassembly or repairs, it is highly advisable to contact your local Toro distributor. Removal of components for repairs and re–assembly may damage some parts if not carried out correctly using special tools available in a dealer's workshop.
- The PTO shaft should not be used without the guards supplied, with partial protection, with damaged guard or without the special anti–rotation chains correctly hooked, so as to permit the maximum angle of the PTO shaft without breaking the chains.

Storage Safety

- Store the aerator on a firm level surface.
- Store aerator away from areas of human activity.
- **Do not** allow children to play on or around the stored machine.
- Make sure the aerator is sitting, or blocked up firm and solid and will not sink into soft ground causing it to tip.
- Ensure that the rear stand pin is secured in place.
- Block the aerator to prevent it from rolling or tipping.

Maintenance

- Before making adjustments or performing maintenance on the aerator, switch off the engine, stop the PTO and apply the hand brake before dismounting from the tractor. Be sure the aerator is on the ground or lowered onto the rear castor/safety stand.
- Support the machine with the rear castor/safety stand when working beneath it. Never rely on the tractor's hydraulics to support the machine.
- Place all controls in neutral, stop the engine, apply hand brake and wait for all moving parts to stop before servicing maintaining, adjusting or unblocking the aerator.
- Be sure machine is in safe operating condition by keeping nuts, bolts and screws tight. Check the tine mounting bolts and nuts frequently to be sure they are tightened to specification.
- **Do not** check or adjust belt tension when the tractor engine is running.
- Be sure all guards are replaced and the hood is secured shut after maintaining or adjusting the machine.
- Perform only those maintenance instructions described in this manual. If major repairs are ever needed or assistance is desired, contact an Authorized Toro Distributor. To ensure optimum performance and safety, always purchase genuine Toro replacement parts and accessories to keep the Toro all Toro. Never use "will-fit" replacement parts and accessories made by other manufacturers. Look for the Toro logo to ensure genuineness. Using unapproved replacement parts and accessories could void the warranty of The Toro Company.

Safety and Instruction Decals

Safety decals and instructions are easily visible to the operator and are located near any area of potential danger. Replace any decal that is damaged or lost.

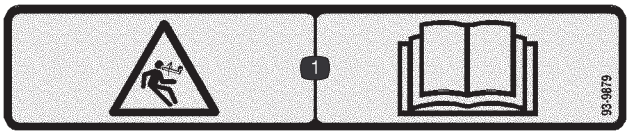

93-9879

1. Stored energy hazard—read the *Operator's Manual.*

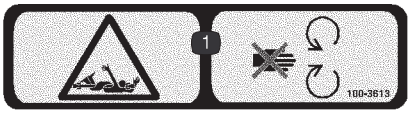

100-3613

1. Full body entanglement hazard—stay away from moving parts

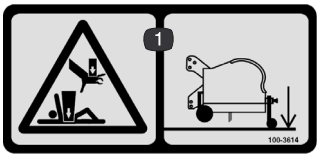

100-3614

1. Crushing hazard of hand and body—use the rear safety stand.

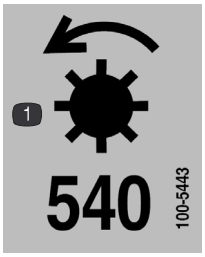

100-5443

1. PTO speed.

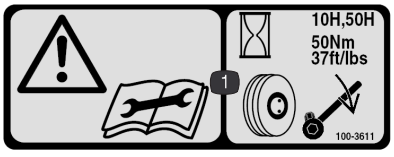

100-3611

1. Warning, read the *Operator's Manual*—torque lug nuts to 37 ft-lbs (50 N·m) at intervals of 10 and 50 hours.

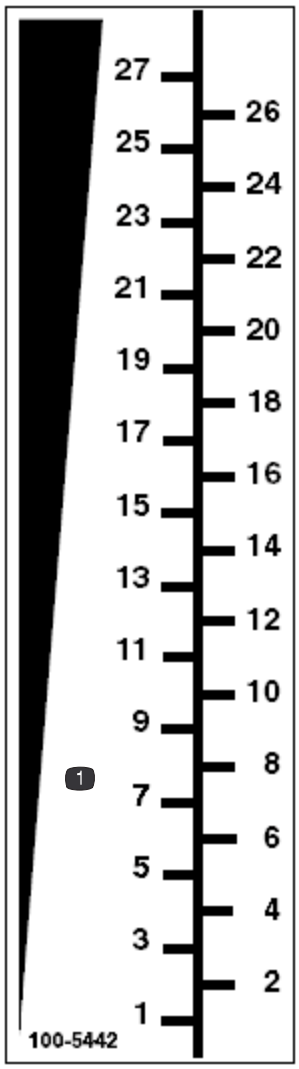

100-5442

1. Depth gauge.

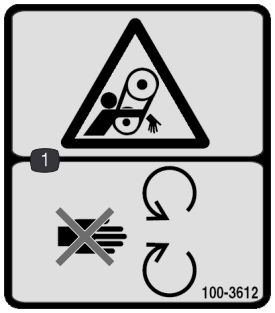

100-3612

1. Entanglement hazard—stay away from moving parts

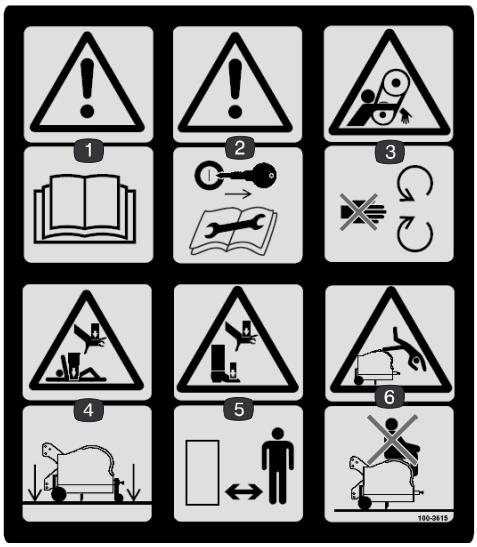

100-3615

1. Warning, read the *Operator's Manual*
2. Remove the ignition key and read the instructions before servicing or performing maintenance.
3. Entanglement hazard—stay away from moving parts.
4. Crushing hazard of hand and body—lower machine to the ground.
5. Crushing hazard of hand and foot—keep bystanders a safe distance from the machine.
6. Falling hazard—do not carry passengers.

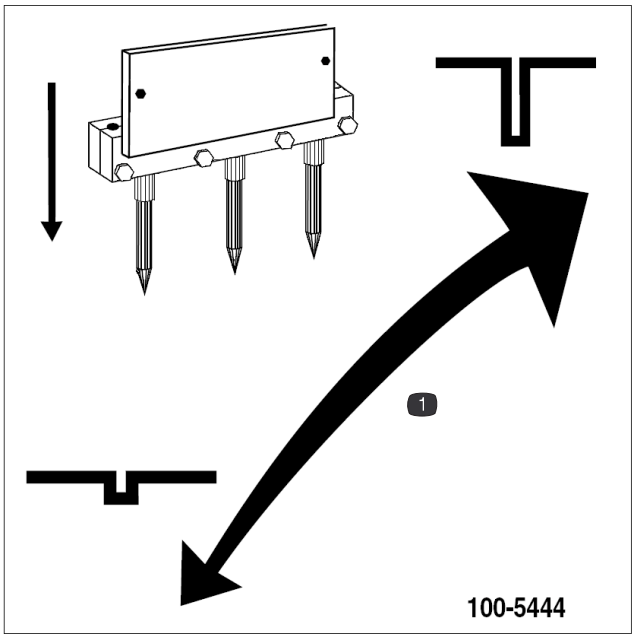

100-5444

1. Raise or lower to adjust depth height

Specifications

General Specifications–660 Aerator

Working Width	60” (1.5 m)
Overall Width	72” (1.83 m)
Overall Length	33” (.84 m)
Overall Height	34” (.86 m)
Number of Tine Heads	6
Roller Diameter	6” (152 mm)
Weight	1,220 lbs. (554 Kg)
PTO Speed	540 rpm
Power Requirement	24 hp (17.5 Kw)
Hitch Category	Category one, three point linkage
Min./Max. Depth	0” – 4” (0–105 mm)
Drive Belt Section	5VX (3) / Tine Pair

General Specifications–880 Aerator

Working Width	80” (2m)
Overall Width	92” (1.83 m)
Overall Length	33” (.84 m)
Overall Height	34” (.86 m)
Number of Tine Heads	8
Roller Diameter	6” (152 mm)
Weight	1,570 lbs. (640 Kg)
PTO Speed	540 rpm
Power Requirement	32 hp (23 Kw)
Hitch Category	Category one, three point linkage
Min./Max. Depth	0” – 4.2” (0–105 mm)
Drive Belt Section	5VX (3) / Tine Pair

Performance Specifications

mph (km/hr)	Forward Hole Spacings	Lateral Hole Spacing Mini Tine	Lateral Hole Spacing 4 Tine Head	Lateral Hole Spacing 3 Tine Head	Sq. ft. / Hr. (Sq. m / Hr.) 660	Sq. ft. / Hr. (Sq. m / Hr.) 880
0.6 (1)	1” (25 mm)	1.2” (30 mm)	2.4” (62 mm)	3.2” (81 mm)	15,385 (1,403)	20,513 (1,871)
0.8 (1.3)	1.5” (38 mm)	1.2” (30 mm)	2.4” (62 mm)	3.2” (81 mm)	23,008 (1,877)	30,677 (2,503)
1.1 (1.7)	2” (51 mm)	1.2” (30 mm)	2.4” (62 mm)	3.2” (81 mm)	30,769 (2,858)	41,025 (3,811)
1.4 (2.3)	2.5” (64 mm)	1.2” (30 mm)	2.4” (62 mm)	3.2” (81 mm)	38,531 (3,579)	51,375 (4,772)
1.7 (2.7)	3” (76 mm)	1.2” (30 mm)	2.4” (62 mm)	3.2” (81 mm)	46,015 (4,274)	61,353 (5,699)
2.0 (3.2)	3.5” (89 mm)	1.2” (30 mm)	2.4” (62 mm)	3.2” (81 mm)	53,777 (4,995)	71,703 (6,660)
2.2 (3.5)	4” (102 mm)	1.2” (30 mm)	2.4” (62 mm)	3.2” (81 mm)	61,261 (5,690)	81,681 (7,587)
2.5 (4)	4.5” (114 mm)	1.2” (30 mm)	2.4” (62 mm)	3.2” (81 mm)	69,300 (6,437)	92,400 (8,583)

Note: Performance specifications shown are maximum values obtained at rated (540 rpm) PTO speed. Changing engine / PTO rpm in any particular gear (or fixed hydrostatic pedal position) will **not** change forward hole spacings, although mph and productivity specifications **will** be proportionately changed.

Setup

Note: Determine the left and right sides of the machine from the normal operating position.

Loose Parts Chart

Note: Use this chart as a checklist to ensure all parts necessary for assembly have been shipped. If any of these parts are missing, total setup cannot be completed.

Description	Qty.	Use
PTO drive shaft	1	Transfers power from tractor to aerator
Rear castor/safety shield	1	Support aerator for maintenance/storage
Side guards	2	Keeps hands and feet away from tines
Keys	2	For hood latch on TE models
Operator's Manual	2	Read before operating machine
Parts Catalog	1	Service part identification

Tractor Requirements

- 24 horsepower—660
- 32 horsepower—880
- Correct tire pressure
- Category one 3 point hitch, rated to lift at least a 1400 lb. (637 Kg) implement–660
- Category one 3 point hitch, rated to lift at least a 1700 lb. (771 Kg) implement–880
- 540 rpm tractor PTO
- Adequate front-end weight (ballast)

Ballast Requirements

Caution

To help prevent bodily injury and provide added stability, make sure front of the tractor is equipped with proper ballast. Refer to tractor operator's manual for ballast requirements.

- Refer to Tractor Operator's Manual for ballast requirements.

Connect Lower Link Arms

1. Aerator must be positioned on a flat, level surface for installation.
2. Back tractor squarely up to aerator until lower link arms are aligned with hitch pins.
3. Make sure PTO is disengaged.
4. Engage parking brake, STOP engine and remove key from ignition. Wait for engine and all moving parts to STOP before leaving operator's seat on tractor.
5. Insert right and left lower link arms onto hitch pins (Fig. 2).

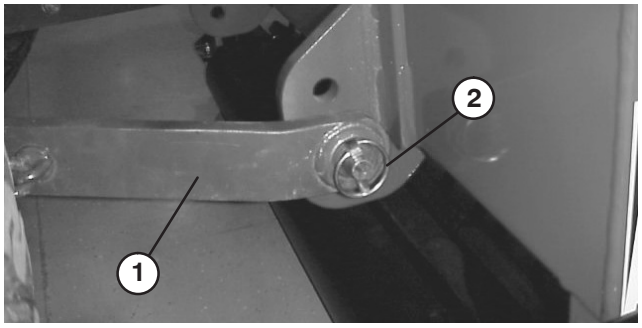

Figure 2

1. Lower link
2. Lynch pin

6. Secure lower link arms to hitch pins with lynch pins (Fig. 2).

Connect Upper Link

Note: Front of aerator **must** be vertical or angle forward slightly while operating for best aeration hole quality (Fig. 3).This angle will change when depth adjustments are made. Adjust upper link to control this angle. Refer to Operation, page 17 for additional information.

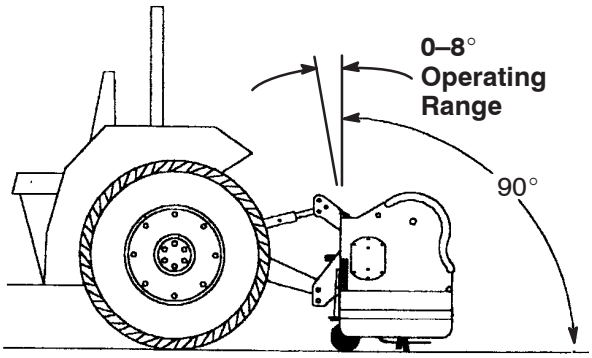

Figure 3

1. Connect upper link to lower hole in bracket and secure with link pin and lynch pin (Fig. 4).

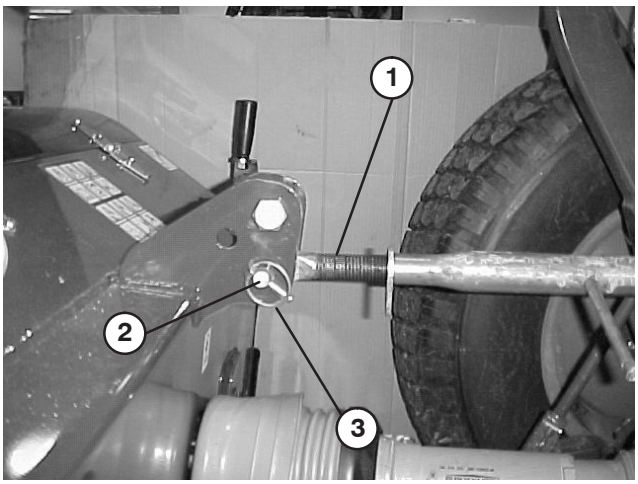

Figure 4

1. Upper link
2. Link pin
3. Lynch pin

2. Rotate adjusting link to tighten the link. Do not overtighten to raise the back end of the aerator off the ground.
3. Tighten lock nut to secure upper link into position.

Install Side Guards

1. Remove 4 nuts, lockwashers and washers loosely secured to each bottom end of aerator frame.
2. Position appropriate side guard (left or right) onto mounting studs (Fig. 5).

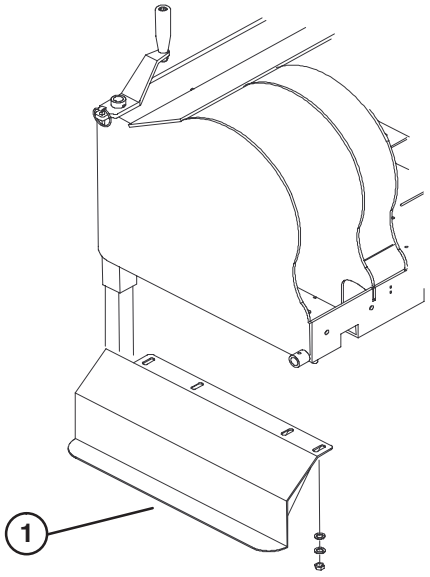

Figure 5

1. Side guard (LH)

3. Secure each side guard to mounting studs with washers and nuts previously removed.

Adjust PTO Shaft Length

Important A long PTO shaft is supplied with machine to accommodate large variations in the tractor's PTO and 3 point locations. For most tractors this shaft is too long and must be cut to correct length or gearbox damage may result.

1. With the aerator vertical or angled slightly forward, lower the aerator until the gear box shaft is approximately the same height as the tractor PTO shaft. This is the shortest distance between the two shafts.
2. Measure the distance from the lock groove of the tractor PTO shaft to the lock groove of the aerator gearbox PTO shaft. Record this dimension.
3. Fully collapse PTO shaft and measure the distance between the lock pin collars. Record this dimension.
4. At it's shortest length, the two halves of the PTO shaft must have at least 1.5 inches (37 mm) of additional clearance to collapse (Fig. 6). If the dimension in step 2 is not at least 1.5 inches (37 mm) greater than the

dimension in step 3, the PTO shaft is too long, proceed to step 5. If there is enough clearance to allow PTO shaft to collapse, proceed to step 10.

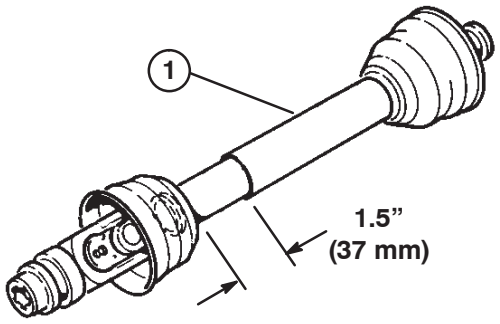

Figure 6

1. PTO shaft

5. Use the following calculation to establish how much shorter the shaft must be, when connected, to ensure a clearance of 1.5 inches (37 mm).

A. Subtract the dimension recorded in step 3 from the dimension recorded in step 2. Record this dimension.

B. Subtract the result in step 5A from 1.5” (37mm). The PTO shaft must be shortened by this amount.

6. Using a hacksaw, cut the yellow guards and the steel tubes shorter by the calculated length. Cut both halves of the PTO shaft

7. Deburr ends of steel tubes internally and externally.

8. Remove all debris from tube sections.

9. Grease steel tubes liberally.

10. Assemble PTO shaft and secure to aerator and tractor.

11. Measure the shaft. If not at least 1.5 inches (37 mm), repeat procedure.

12. Raise aerator to highest position. There must be at least 3 inches (75 mm) of overlap of the halves. Adjust 3 point lift stop, if necessary. Refer to Adjust 3 Point Lift Stop, page 11.

Connect PTO Shaft

1. Connect PTO shaft to gearbox input shaft (Fig. 7).

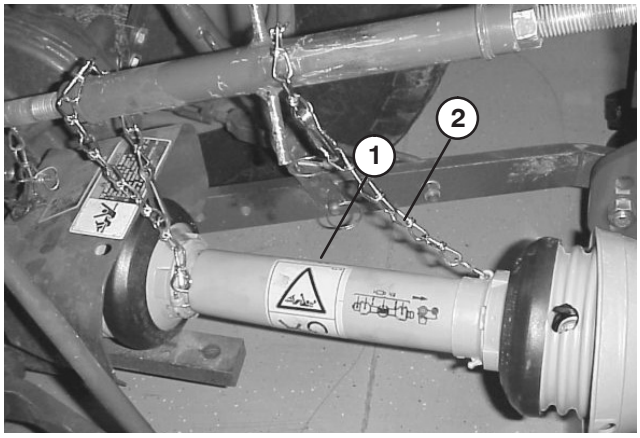

Figure 7

1. PTO shaft
2. Safety chains

2. Connect PTO shaft to rear tractor PTO shaft.

3. Slide PTO shaft forward as far as it will go.

4. Depress pin to secure PTO shaft in place. Slide PTO shaft back and forth to make sure it is properly locked.

5. Connect shield safety chains from powershaft sections to welded clips on link arms or to PTO shields. Make sure chains remain slack when aerator is raised or lowered.

Caution

To help prevent bodily injury, keep all PTO shields in place and connect shield chains to link arms or PTO shields to prevent shields from rotating during operation.

Mount Castor/Safety Stand

Note: Use castor wheel to move aerator around on a hard surface, as aligning to tractor for installation or for storage. Level aerator by adjusting roller until the point of the depth adjustment arrow is just above the side guards.

1. Remove bolt and nut securing rear castor/safety stand tube to shipping pallet (Fig. 8). Retain bolt and washer for installation of castor wheel.

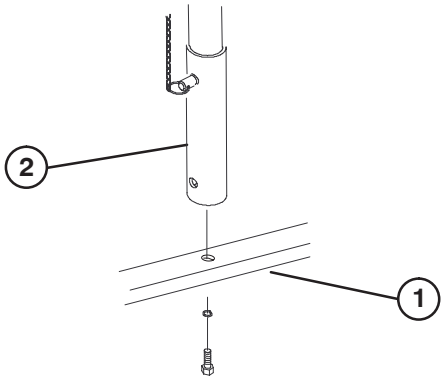

Figure 8

1. Shipping pallet
2. Castor/safety stand

2. Raise aerator off pallet.

3. Remove pallet.

4. Mount castor wheel to rear castor/safety stand tube with bolt and washer previously removed (Fig. 9).

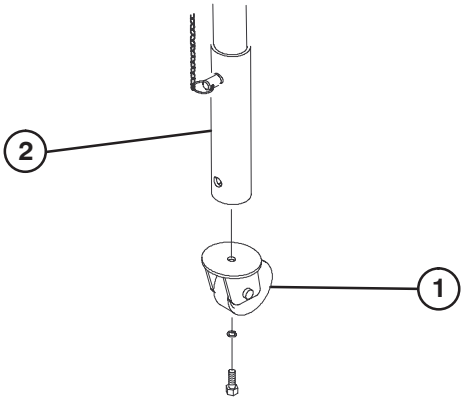

Figure 9

1. Castor wheel
2. Castor/safety stand

5. Rear castor/safety stand has two positions:

- Collapsed for aerator storage
- Extended for aerator maintenance

6. Secure castor/safety stand in desired position with pin (Fig. 10). Tighten castor knob.

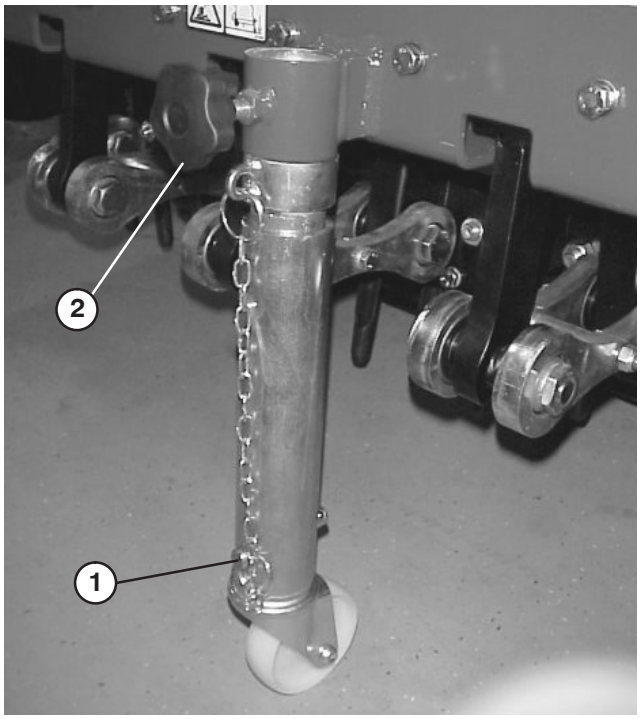

Figure 10

1. Pin
2. Castor knob

7. Slowly lower aerator to the ground.

Adjusting Sway Links

Adjust sway links on lower draft arms of 3-point hitch to minimize side-to-side sway to a maximum of 1 inch (25 mm) on each side (Fig. 11).

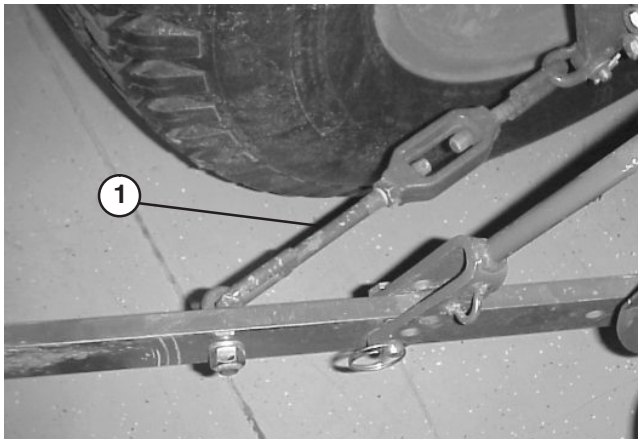

Figure 11

1. Sway link

1. Adjust the lower links inboard until they contact the aerator mounting plates. This will reduce the stress on the pins. If the tractor has sway chains instead of sway

links, it is recommended that washers be installed between the lower link arm and lynch pin to reduce the over hung load on the lift pins.

Note: Refer to tractor operator's manual for additional installation and adjustment procedures.

Level Aerator Side–to–side

1. Park tractor and aerator on a level, firm surface. Make sure both depth gauges are set at the same setting.
2. Place level on top of aerator hood to check for level side-to-side (Fig. 12).



Figure 12

1. Level 2.

3. Turn the adjustable link body (if provided) to raise or lower the link arm until the aerator is leveled side–to–side.

Note: Refer to tractor operator's manual for additional adjustment procedures.

Adjust 3-Point Lift Stop

Adjust and set 3 point lift stop (Fig. 13) to provide approximately 4" ground clearance, when in the raised position, to minimize PTO angle when raising aerator. For transporting or trailer loading/unloading, the full lift range can be used as long as the PTO tubes do not slide apart. Operating the PTO in the fully raised position may damage the PTO or other components.

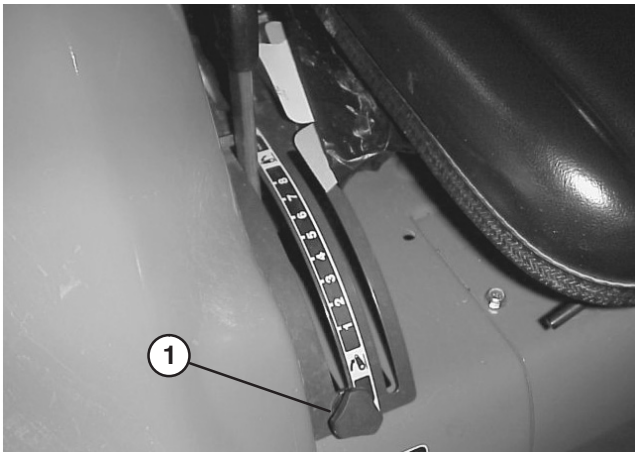

Figure 13

1. 3-Point lift stop

Note: Refer to tractor operator's manual for adjustment procedures.

Install Tines/Tine Heads

A wide selection of tines and tine heads are available for the aerator. Choose the tine type, size and spacings required for the job. Install the tine head and tines per Installation Instructions supplied with each tine kit. Refer to accessory chart on page 13, for required tines.

Important **Never operate the aerator without the tine heads installed. The arms will move excessively and may damage the aerator frame.**

Mount Turf Guards

A wide selection of turf guards are available for the aerator. Choose the required turf guards per accessory chart on page 13.

1. Loosen nuts securing turf guard clamps to turf finger tool bar (Fig. 14).

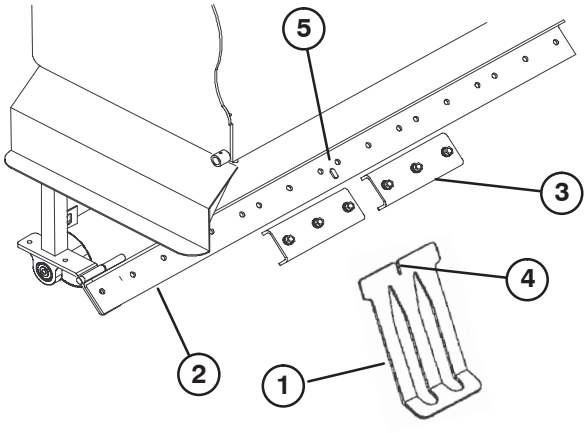

Figure 14

1. Turf guard
2. Turf finger tool bar
3. Turf guard clamp
4. Notch
5. Locator key

2. Slide appropriate turf guard under center turf guard clamp while inserting notch onto locator key of turf finger bracket (Fig. 14). Refer to accessory chart note, page 13.

3. Tighten nuts securing turf guard and center turf guard clamp to turf finger bracket.

4. Working outward, mount remaining turf guards to each side and secure turf guard clamps.

Important From the rear of the machine, check that the tines line up with the center of the gaps in the turf guards.

5. To decrease down pressure of turf guards:

A. Remove nuts securing each end of turf finger bracket to roller legs (Fig. 15).

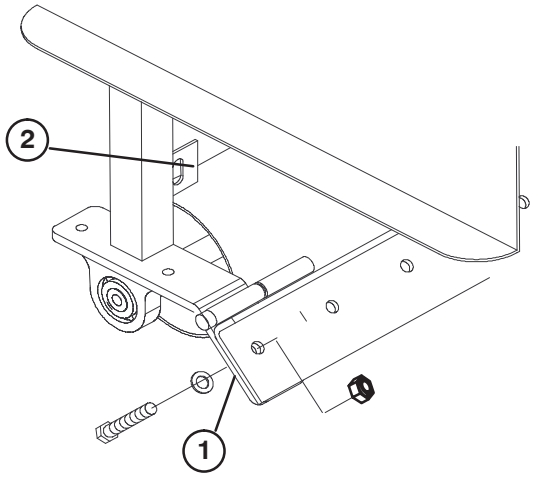

Figure 15

1. Spacer location (1 each end)
2. Roller scraper tab

B. Pivot turf finger bracket upward and insert a washer onto each stud.

C. Pivot turf finger downward onto studs and check angle.

D. Install nuts to secure assembly.

Note: Aeration depth may need to be reduced to ensure clearance between the tine heads and the turf guards. Check clearance before aerating.

Note: To aid in the loading/unloading of the aerator from a trailer, remove nuts securing each end of turf finger tool bar to roller legs and pivot turf finger tool bar upward.

Adjust Roller Scraper

Adjust roller scraper so there is approximately a 1/8” (3mm) gap between scraper and roller.

1. Loosen fasteners securing each end of scraper to roller scraper tab (Fig. 14).

2. Slide the roller scraper up or down to required position and tighten fasteners.

Adjust Turf Guards

Before starting your new aerator, remove the rear castor stand and lower the machine on the 3–point linkage until the depth control roller is resting on the ground. From the rear of the machine, check that the tines line up exactly with the center of the gaps in the turf guards. Install the correct turf guards (Fig. 16), if necessary.

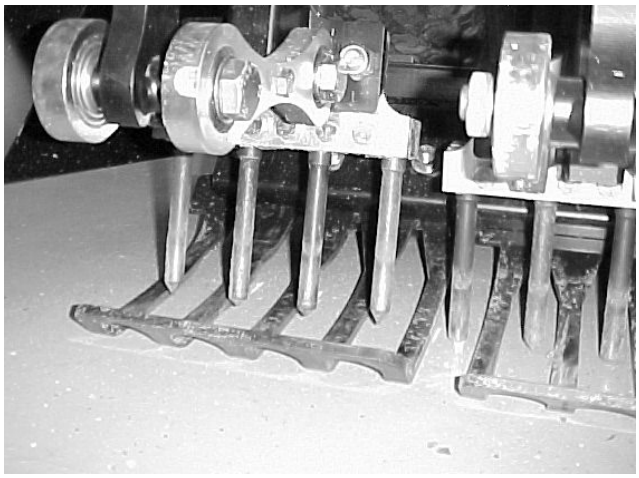

Figure 16

Note: Turf with a good root structure may not require the turf guards. If this is the case. **Do not remove the turf guard tool bar** as this adds support to the roller leg assembly. Just remove the plastic fingers from the turf guard bracket.

Removing Aerator from Tractor

1. Stop vehicle on a level surface, not on a slope.
2. Disengage the PTO and engage the parking brake.
3. Stop the engine and remove the key from ignition switch.
4. Before leaving the operator's seat on tractor, wait for engine and all moving parts to stop.
5. Install rear castor/safety stand, collapse it to storage position and install pin. Tighten knob.

Note: Aerator can be stored on original shipping pallet if desired. Remove castor wheel.

6. Disconnect safety shield chains from PTO tractor. Secure end of chain to aerator side of PTO shaft to prevent PTO shaft from coming apart.
7. Slowly lower aerator until rear castor/safety stand contacts ground.
8. Lower roller, by adjusting depth control handles, until roller contacts ground.
9. Loosen locking nut and rotate adjusting link to release tension between aerator and tractor.
10. Remove lynch pin and top link pin securing center link to bracket.
11. Push release pin to disconnect powershaft from tractor PTO shaft.
12. Slide powershaft back and remove from tractor.
13. Remove lynch pins and slide lower link arms off hitch pins.

Accessory Chart

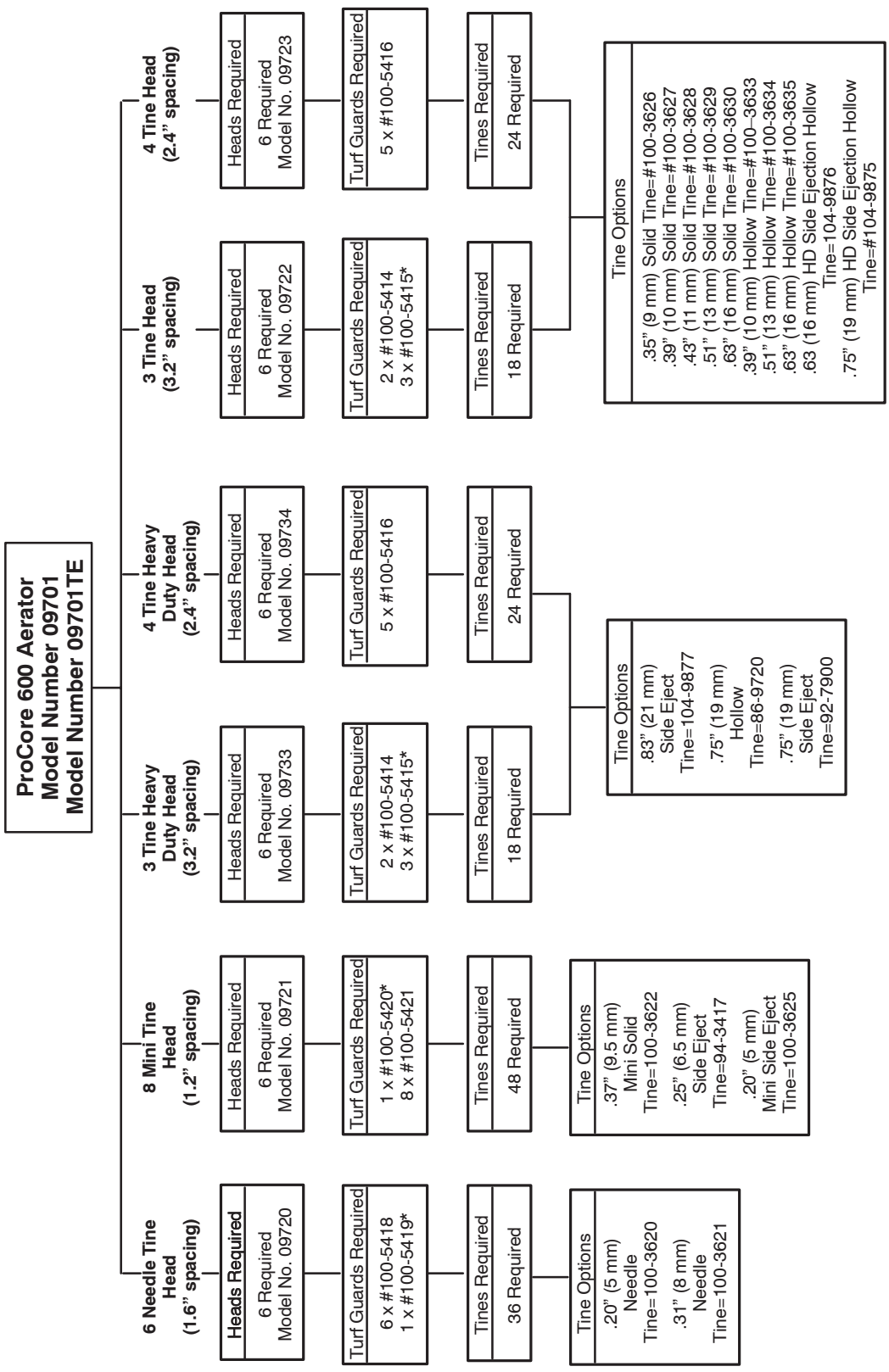

Note: One of these turf guards must be installed in center position.

Accessory Chart

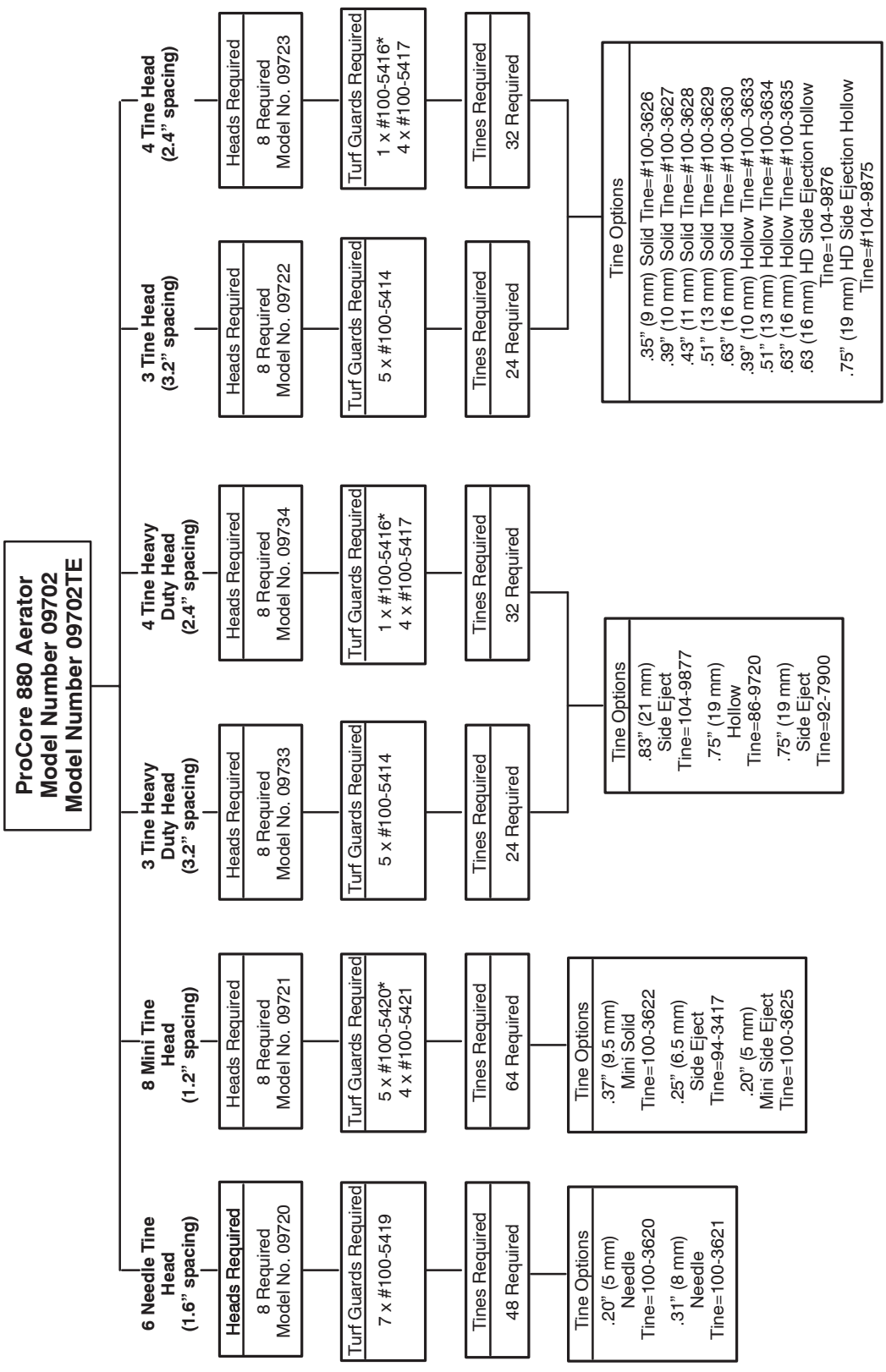

Note: One of these turf guards must be installed in center position.

Controls

Depth Adjustment Handles

Remove lynch pins, rotate handles to raise or lower tines to desired depth and replace lynch pins (Fig. 17).

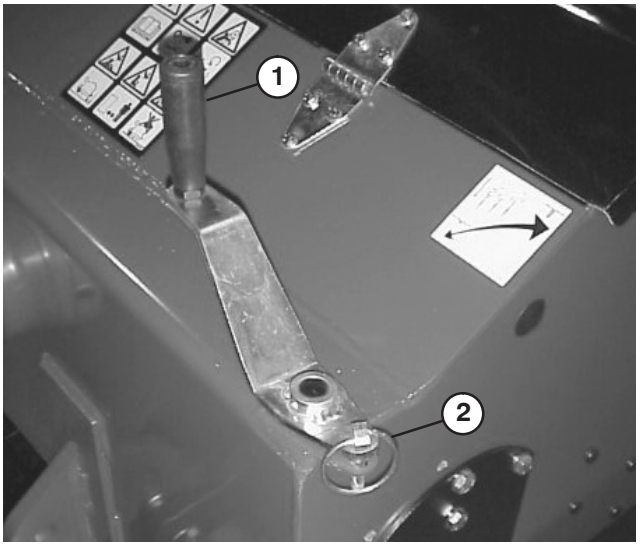

Figure 17

1. Depth adjustment handle
2. Lynch pin

Depth Guides

Depth guides (1 thru 27) are provided to give equal increments for adjustment. The numbers do not relate to measurements of depth as this changes with tine type and amount of tine wear. Adjustment between two numbers will give approximately .20 inches (5 mm) change in depth. The higher the number, the deeper the tine penetration. Always adjust each side to the same number (Fig. 18).

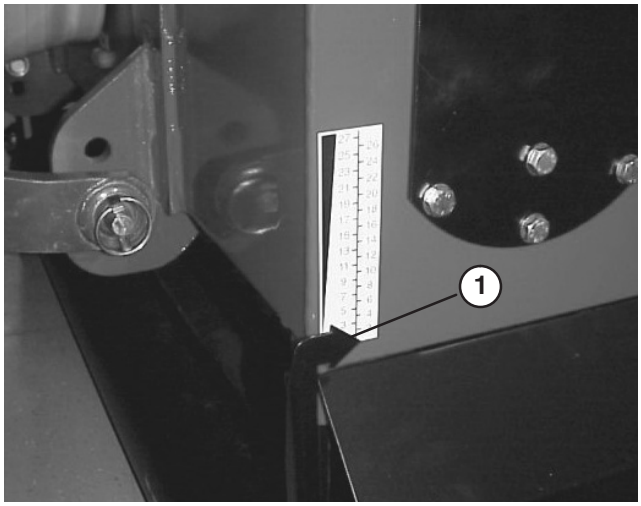

Figure 18

1. Depth guide

Operation

Adjust Tine Depth

To adjust the working depth of the tine, proceed as follows:

1. Remove the lynch pin from each depth adjust handle (Fig. 19).

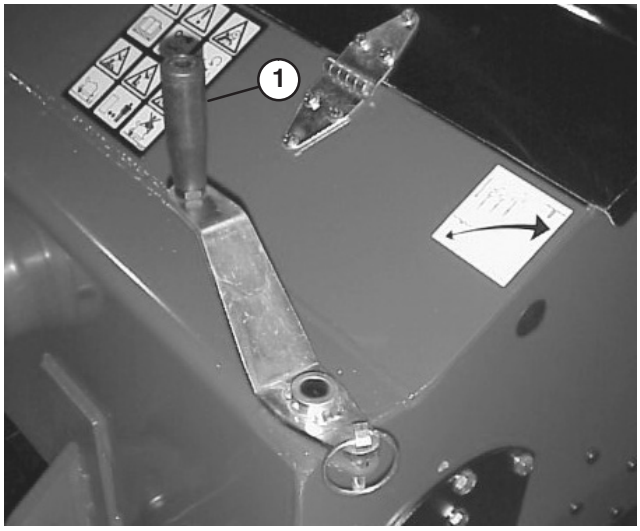

Figure 19

1. Depth adjustment handle

2. Turn the depth adjuster handles to raise (deeper) or lower (shallow) the roller.

Note: Make sure that the roller is on the ground once the depth is chosen.

3. Depth guides (Fig. 20) are provided with numbers 1 through 27. Depth varies with the mounted angle of aerator, tine type and amount of tine wear. Refer to Depth Chart on page 16. Adjustment between two numbers will give approximately 0.20 inches (5 mm) change in depth. The higher the number, the deeper the tine penetration. Always adjust each side to the same number.

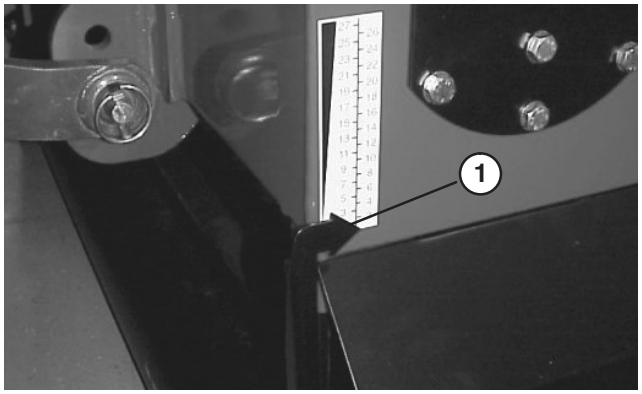

Figure 20

1. Depth guide

Important If a large change in height is required, adjust each leg by a small amount to ensure the roller legs are adjusted as evenly as possible.

Note: Remember when depth changes are made, you will need to adjust the top link length to give the correct machine angle. Refer to Connect Upper Link, page 8.

Important Tine depth is affected by the mounted angle of the aerator as well as the depth setting. If the aerator is angled rearward, the tine heads may contact the turf guards and damage may occur. Depths 26 & 27 cannot be used when the aerator is in the vertical position. See Depth Chart.

4. Install the depth adjust handle lynch pins before running the machine, even if you are just testing for correct depth.

Important Tine depth is determined by the tine type, depth adjustment, amount of tine wear and mounted angle of the aerator. Refer to Depth Chart on page 18.

Important Maximum depth is achieved when the aerator is mounted vertically (Fig. 21) and the depth adjustment set at 25. In this condition, do not operate at greater depth settings, as there is minimal clearance between the tine head and the turf guards. Never operate with the aerator angled rearward or damage to the turf guards may occur.

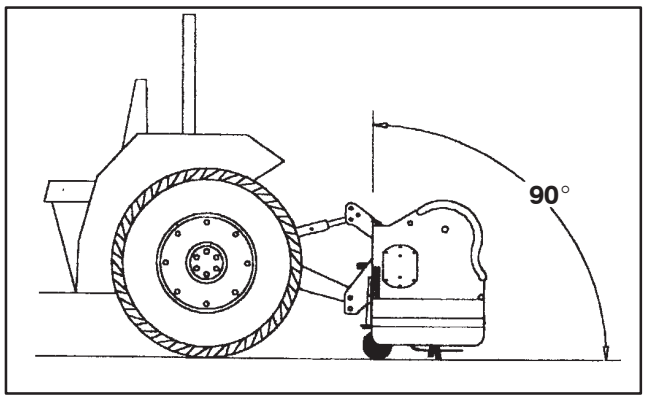

Figure 21

In some instances, angling the aerator forward may improve hole quality but will also reduce aeration depth and gain clearance with the turf guards. A forward angle of approximately 4° is a good initial setting. Use a magnetic based angle indicator to determine the forward angle, or use the following procedure:

A. Position aerator on a flat level surface.

B. Make sure aerator roller is on the ground and depth indicator is set at desired setting (Fig. 22).

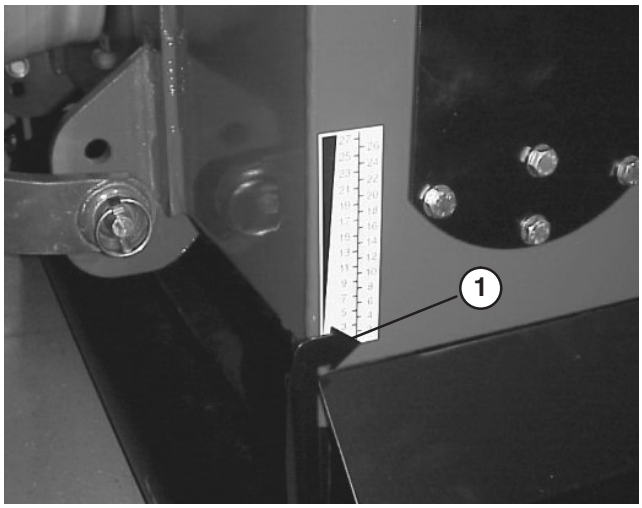

Figure 22

1. Depth guide

C. Measure and record the distance from the ground to the lower rear corner of the frame (“H1”) and front corner of the frame (“H2”) (Fig. 23).

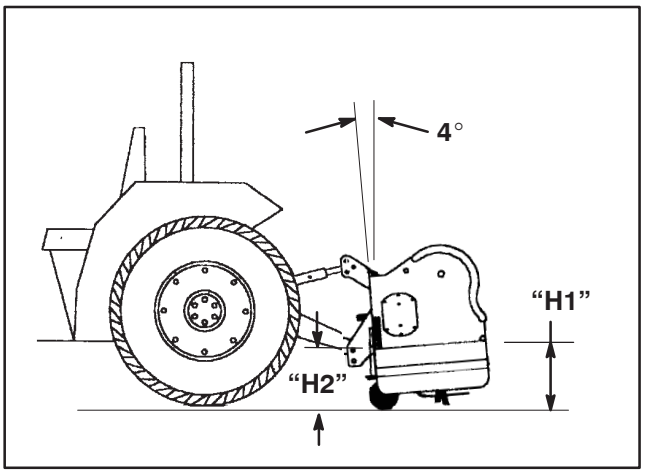

Figure 23

D. Adjust upper link until the difference between “H1”–“H2” matches desired forward angle of aerator (See Angle Chart below).

“H1”–“H2”	0”	0.8” (21mm)	1.7” (43mm)	2.5” (64mm)	3.3” (85mm)
Angle	0°	2°	4°	6°	8°

Depth Chart Guide

Depth Gage	HD & Std Tines (5.75"/146 mm long) Aerator Installed Angle in Degrees						Mini Tines (4.0"/102 mm long) Aerator Installed Angle in Degrees					
	0 Deg		4 Deg		8 Deg		0 Deg		4 Deg		8 Deg	
1	NO PENETRATION						NO PENETRATION					
2												
3	inch	mm										
4	0.1	3										
5	0.3	8										
6	0.5	13										
7	0.7	18										
8	0.9	23										
9	1.1	28	inch	mm								
10	1.3	33	0.1	3								
11	1.5	38	0.3	8								
12	1.7	43	0.5	14			inch	mm				
13	1.9	48	0.8	19	inch	mm	0	1				
14	2.1	53	1.0	25	0.0	1	0.2	6				
15	2.3	58	1.2	30	0.3	7	0.4	11				
16	2.5	63	1.4	36	0.5	13	0.6	16				
17	2.7	68	1.6	41	0.7	18	0.8	21				
18	2.9	73	1.8	47	0.9	24	1.0	26	inch	mm		
19	3.1	78	2.1	52	1.2	29	1.2	31	0.0	1		
20	3.3	83	2.3	58	1.4	35	1.4	36	0.3	7		
21	3.5	88	2.5	63	1.6	41	1.6	41	0.5	13		
22	3.7	93	2.7	69	1.8	46	1.8	46	0.7	19	inch	mm
23	3.9	98	2.9	74	2.0	52	2.0	51	1.0	25	0.0	0
24	4.1	103	3.1	80	2.3	58	2.2	56	1.2	31	0.3	7
25	4.3	108	3.4	85	2.5	63	2.4	61	1.5	37	0.5	14
26	NA		3.6	91	2.7	69	NA		1.7	43	0.8	21
27	NA		3.8	97	2.9	74	NA		1.9	50	1.1	28

NA	Do not operate aerator in this range - turf guard damage may occur
No penetration	Do not operate aerator in this range-unacceptable results may occur
4.1 inches	Operate in this range-depth results are dependent on turf conditions

Note: In instances where sufficient root growth exists, the turf guards may be removed to attain maximum depth without damaging the turf guards.

Note: For future reference, record the upper link length that achieves the desired operating angle.

Tractor Controls

It is necessary to familiarize yourself with the operation of the following tractor controls before you are able to operate the aerator:

- PTO Engagement
- 3-Point Hitch (Raise/Lower)
- Clutch
- Throttle
- Gear Selection

Note: Refer to tractor operator's manual for operating instructions.

Principles of Operation

The tractor's three point hitch linkage lifts the aerator for transport and lowers it for operation.

The tractor's power take-off (PTO) power is transmitted via shafts, gearbox and drive belts to a number of crankshafts which drive the tine holding arms into the turf surface.

As the tractor travels forward with the PTO engaged and the machine lowered, a series of holes are created in the turf surface.

The depth of the tine's penetration is determined by the mounted angle of the aerator and the height of the depth control roller.

The distance between the holes created is determined by the tractor's gear ratio (or hydrostatic traction pedal position) and the number of tines in each tine head. Simply changing engine rpm does not change hole spacing.

Training Period

Before using the aerator, find a clear area and practice using the machine. Operate the tractor at recommended gear settings and PTO drive speeds and become thoroughly familiar with machine handling. Practice stopping and starting, raising and lowering the aerator, disengaging the PTO drive and aligning the machine with previous passes. A practice session assures confidence in the performance of the Aerator and helps ensure use of proper operating techniques wherever the machine is operated.

If there are sprinkler heads, electrical or communication lines or other obstructions in the area to be aerated, mark these items to ensure they are not damaged during operation.

Caution

To avoid personal injury, never leave the tractor seat without first setting the parking brake and disengaging the PTO drive. Never perform aerator repairs without first lowering the aerator onto the castor/safety stand. Be sure all safety devices are secured in proper place before resuming operation.

Before Aerating

Inspect the area of operation for hazards that could damage the machine and remove them, if possible, or plan how to avoid them. Carry replacement tines and tools to effect repairs should tines contact foreign materials.

Aerating Procedures

Note: When using needle tine heads, make sure to read instructions, included with kit, for unique operating procedure.

1. Lower the aerator on the 3–point linkage so that the tines are nearly to the ground at the lowest part of their stroke.
2. At a low tractor engine rpm, engage the power take off (PTO) clutch to start the aerator working.

Important Do not operate aerator at 540 PTO rpm when lifted out of the ground. This machine can be damaged if operated at full speed without the tines working in the turf. Never operate aerator without tine heads installed

3. Select a gear that gives a forward speed of approximately .6 – 2.5 MPH (I to 4 km/hr) at (refer to tractor operator's manual) rated PTO speed.
4. As the clutch is released and the tractor moves forward, lower the machine fully into work and increase engine speed to give a maximum of 540 rpm at the PTO.

Important Never operate the tractor PTO in excess of 540 rpm or damage to the aerator could occur.

Note: Make sure that the roller is on the ground.

5. Note the hole pattern. If you require greater hole spacing increase forward speed of the tractor by changing up a gear or with a hydro–static drive tractor, shift the hydrostat lever or pedal to give faster speed. For closer hole spacing, decrease tractor forward speed. **Changing engine speed, in a particular gear, will not change the hole pattern.** Operate at an engine speed that the aerator runs smoothly.

Important Look behind frequently to ensure the machine is operating properly and alignment is maintained with previous passes.

6. Use the front tractor wheel as a guide to maintain equal lateral hole spacing with the previous pass.
7. At the end of the aeration pass, raise the aerator, lower the engine rpm and disengage the PTO.
8. If you back into a tight area (like a tee box), disengage the PTO and raise the aerator to it's highest position. Use caution not to catch the turf guards on the turf.
9. Always clear the area of all damaged machine parts, such as broken tines, etc., to prevent their being picked up by mowers or other turf maintenance equipment.
10. Replace broken tines, inspect and correct damage to those still useable. Repair any other machine damage before commencing operation.

Transport Operation

To begin transport operation, raise the aerator and disengage the PTO. To avoid loss of control, traverse steep inclines slowly, approach rough areas at reduced speed and cross severe undulations carefully.

Important Do not exceed transport speeds of 15 mph (24 km/hr).

Caution

Do not exceed the maximum or minimum tractor tire inflation pressures as recommended by tire manufacturer.

Inspection and Cleanup after Use

After daily use, thoroughly wash the machine with a garden hose without a nozzle so contamination and seal and bearing damage due to excessive water pressure will be avoided. A brush may be used to remove caked-on material. Use mild detergent to clean the covers. Applying a coat of auto wax periodically will retain the cover's glossy finish. After cleaning, inspect for machine damage, gear oil leakage, component and tine wear.

Operating Tips

1. Gradually engage PTO at low engine speed while increasing throttle to 540 PTO rpm (maximum) while lowering aerator. Operate at an engine rpm that the aerator runs most smoothly.

Note: Changing engine / PTO rpm in a particular tractor gear (or fixed hydrostatic pedal position on tractors with hydrostatic transmission) will not change forward hole spacing.

Important **Do not operate PTO at high rpms for extended time periods when aerator is out of the ground.**

2. Make very gradual turns when aerating. Never make sharp turns with PTO drive engaged. Plan your aeration path before lowering the aerator.
3. If tractor "bogs" down when operating on hard ground or going uphill, raise aerator slightly until speed is regained, then lower aerator again.
4. Do not aerate if ground is too hard or dry. Best results are obtained after a rain or when turf has been watered the previous day.

Note: If the roller rides up off the ground while aerating, the ground is too hard to achieve the desired depth, reduce the aeration depth until the roller contacts the ground during operation.

5. Raise aerator penetration, if ground is hard packed. Clean–up cores and re–aerate at deeper penetration, preferably after watering.
6. The aerator is offset to one side to allow aerating without driving over the cores with the tractor tires. Whenever possible, aerate with the longer offset towards the previous aeration pass.
7. Always check/adjust top link whenever aeration depth is changed. The front of the aerator should be vertical or angled slightly forward. Experiment with depth and angle to achieve best hole quality.

Note: Once optimum hole quality is attained, record depth setting and the upper link length for future reference.

Caution

To avoid personal injury, never leave the tractor seat without first setting the parking brake and disengaging the PTO drive. Never perform aerator adjustments or repairs without first lowering the aerator onto the castor/safety stand. Be sure all safety devices are secured in proper place before resuming operation.

Optional Core Windrower

ProCore 660 only

When using hollow tines, an Optional Core Windrower (Toro Model No. 09732) is available to place cores in narrow rows behind the machine.

Optional Contour Following Kit

An Optional Contour Following Kit (Toro Model No. 09154) is recommended for aeration on undulating or uneven surfaces.

Maintenance

Lubrication

Greasing Bearings and Bushings

The main working bearings of the aerator are sealed for life and require no maintenance or lubrication. This drastically reduces the maintenance required and eliminates the risk of grease or oil being dropped onto the turf.

There are grease fittings that must be lubricated with an SAE multi–purpose, high–temperature grease with high pressure (EP) performance or SAE multi–purpose lithium base grease.

The lubrication intervals and points are:

Lubricate Daily–PTO shaft (3) (Fig. 24).



Figure 24

Lubricate Weekly–Roller Bearings (2) (Fig. 25), Depth Jacks (2) (Fig. 26), Drive Shaft Bearings (2) (Fig. 27).

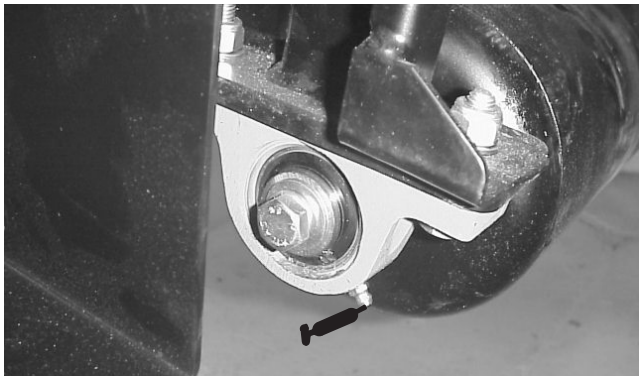

Figure 25

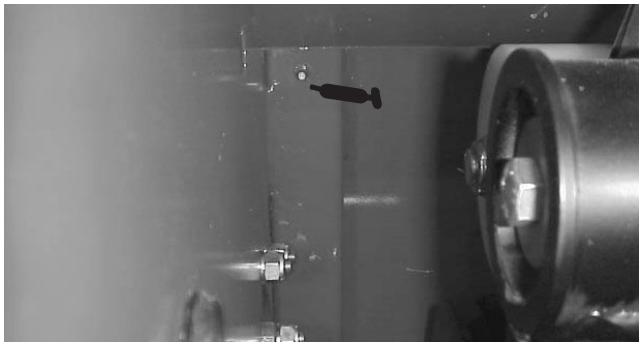

Figure 26

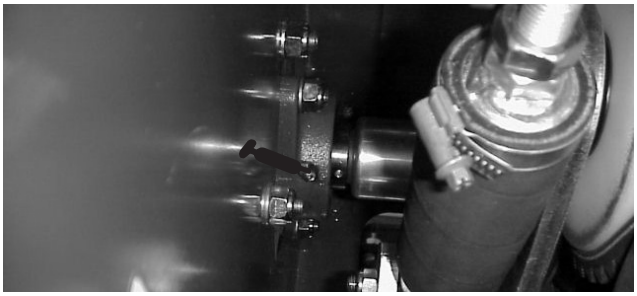

Figure 27

Gearbox Lubrication

The gearbox is filled with 85/140 gear oil or equivalent.

Check gearbox oil level every 6 months or 100 hours.

1. Remove check plug at rear of gearbox (Fig. 28).

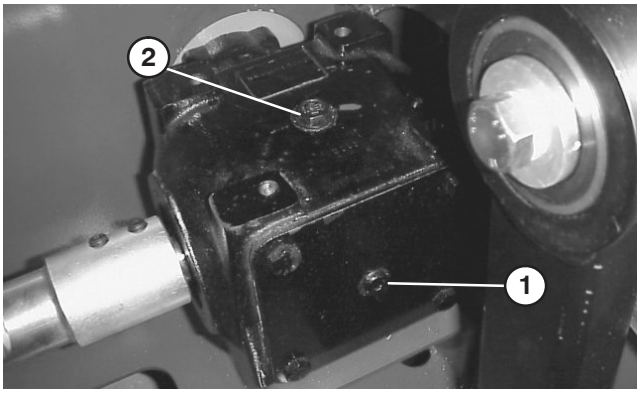

Figure 28

1. Check plug
2. Fill plug

2. Make sure oil is up to bottom of check plug hole in gearbox (Fig. 28).
3. If oil level is low, remove fill plug on top of gear box and replenish oil as required.
4. Install plug.

Torque Taper Lock Assembly

After first 10 hours of operation torque set screws securing taper lock bushings to driven pulleys to 37 ft. lbs. (50 N·m) (2 each pulley) (Fig. 29).

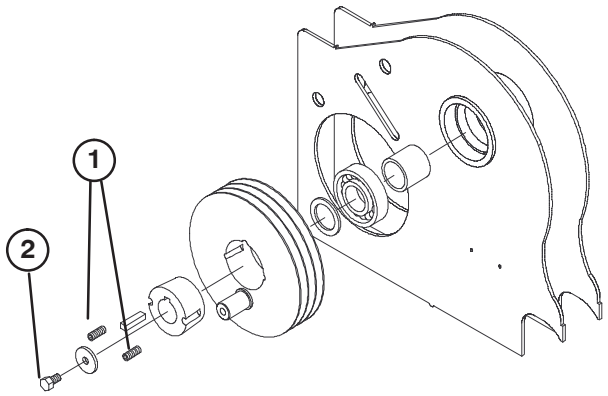

Figure 29

1. Bushing set screws
2. Bolt (M12)

Every 50 hours of operation, perform the following maintenance procedure to ensure proper bearing clamp load. Failure to perform this maintenance procedure can lead to premature failure of crank shaft assembly resulting in an extensive repair.

Note: An upgraded crank assembly is available after January 1, 2005 that does not require this maintenance procedure. See your Toro distributor for further information.

1. Remove belt tension from crank assembly.

2. Position stomper arm on pulley side of crank assembly at bottom dead center.

3. Remove M12 bolt securing the taper lock assembly to the opposing crank arm (Fig. 29)

4. Remove taper lock bushing set screws from bushing. Install set screws in the removal holes and tighten until taper lock bushing is free from pulley. Remove setscrews from removal holes.

5. Use the ”thick” assembly washer located in the frame under the bolt that holds the manual tube and torque the M12 bolt to 59–73 ft–lbs (80–100 Nm).

6. Install setscrews in taper lock bushing and secure. Torque setscrews in an alternating method to 37 ft–lbs (50 Nm).

7. Remove M12 bolt and replace the assembly washer with original ”thin” washer. Re–torque M12 bolt to 59–73 ft–lbs (80–100 Nm).

8. Re–install belt tension.

Torque Jackshaft Set Screws

After first 10 hours of operation and every 50 hours thereafter, torque set screws securing drive shafts to gear box shafts to 20–25 ft. lbs. (26–32 N·m) (4 each side) (Fig. 30).

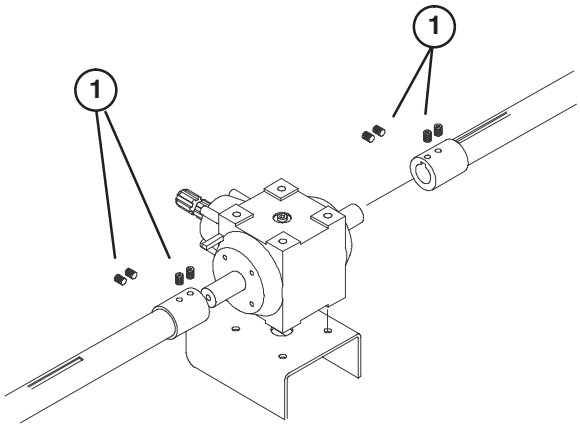

Figure 30

1. Drive shaft set screws

Adjusting Belt Tension

Make sure belts are properly tensioned to ensure correct operation of unit and unnecessary wear.

1. Proper belt tension is attained by compressing idler spring to a length of 3 inches (76 mm).

2. To adjust belt tension, proceed as follows:

A. Loosen jam nut securing idler tube to tensioner arm (Fig. 31).

B. Rotate hex on top of idler tube until the bottom of the rubber boot is between the two grooves in the guide tube. At this position the spring will be compressed to a length of 3 inches (76 mm).

C. Tighten jam nut.

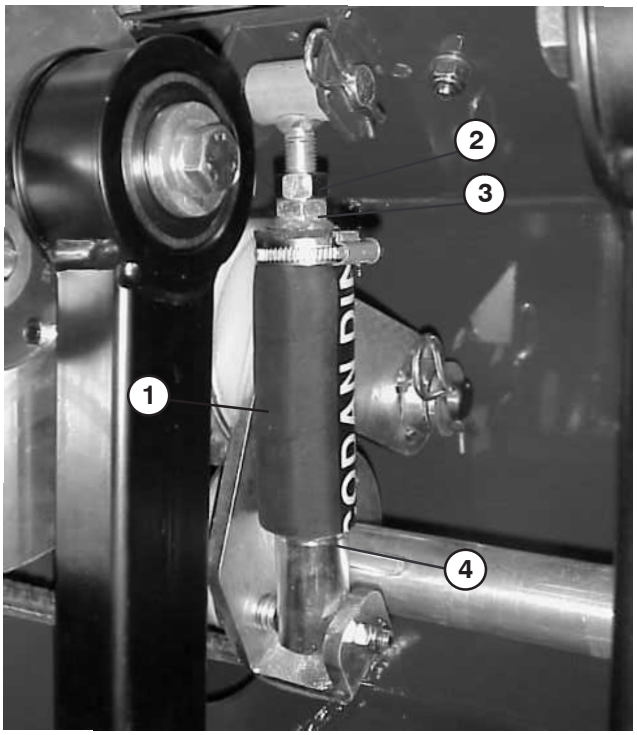

Figure 31

1. Idler spring boot
2. Jam nut
3. Idler tube
4. Bottom guide tube groove

Replacing Belts

1. Loosen jam nut securing idler tube to tensioner arm (Fig. 32).

2. Rotate hex on top of idler arm until all spring tension is removed (Fig. 32).

Caution

Springs are under tension, use caution when adjusting or removing.

3. Remove hair pin cotter and idler pin securing top of spring assembly to frame (Fig. 32).

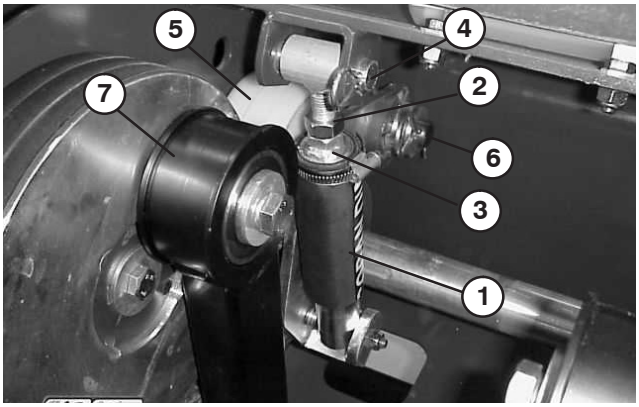

Figure 32

1. Idler spring boot
2. Jam nut
3. Adjusting nut
4. Idler pin & hairpin cotter
5. Idler pulley
6. Hairpin cotter & idler shaft
7. Tine arm assembly

4. Remove hair pin cotter securing idler pulley assembly to idler shaft (Fig. 32). Remove idler assembly from shaft.

5. Remove screw, lock washer and flat washer securing top of tine arm to pulley (Fig. 32).

6. Remove fasteners securing bottom of tine arm or rotalink arm to bottom links (Fig. 33). Align tine arm with slot in frame and slide off crank pin.

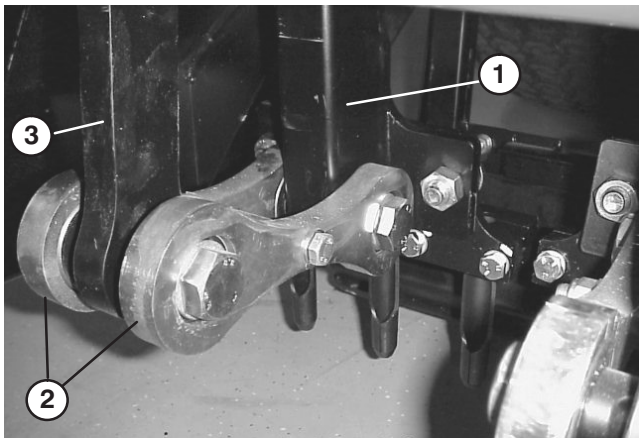

Figure 33

1. Tine arm
2. Bottom link
3. Rotalink arm

7. To ensure components are re–installed correctly, mark location of end cover on aerator frame (Fig. 34)

8. Remove (8) capscrews and flat washers securing end cover and bearing housing to end of aerator frame (Fig. 34).

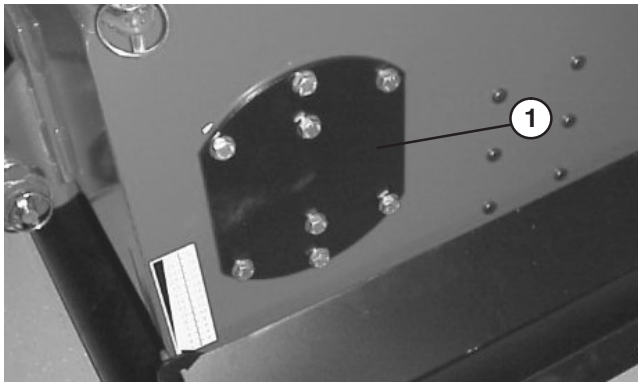

Figure 34

1. End cover

9. Loosen bearing set screws (Fig. 35).

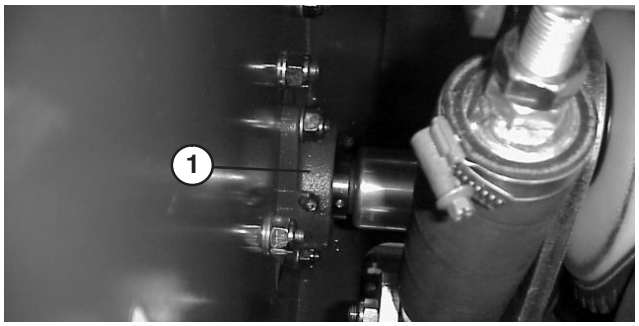

Figure 35

1. Bearing

10. Remove end cover and bearing.

Note: Remove only the end cover necessary to access belts being removed, i.e.

Model 660

Left cover – Left belts
Right cover – Center and Right belts

Model 880

Left cover – Left & left center belts
Right cover – Right and Right center belts

11. Slide belts off driven and driver pulleys.

12. Remove belts from aerator by routing them over drive shaft, thru holes in frame center plates, over bearings and out hole in end of frame.

Important When changing belts, always change all (3) belts on the pulley.

13. Route new belts over drive shaft and onto pulleys.

14. Reinstall end cover onto drive shaft. At location marked on frame, loosely secure end cover to aerator frame with (8) capscrews and flat washers removed.

15. Reinstall bottom of tine arm to bottom links or rotalink arm with fasteners removed.

16. Reinstall top of tine arm to pulley with screw, lock washer and flat washer.

17. Secure idler pulley assembly to idler pivot shaft with hair pin cotter.

18. Secure top of spring assembly to frame with idler pin and hair pin cotter.

19. Adjust belt tension. Refer to Adjusting Belt Tension.

Storage

At the end of an aerating season or when the aerator will not be used for a long period, it is good practice to carry out the following preventative maintenance.

1. Clean off any dirt or grease that may have accumulated on the aerator or any of the moving parts.

2. Remove the tines and clean out hollow tines. Coat tines with oil to prevent rusting during storage.

3. Open the hood and clean out the inside of the machine.

4. Lubricate all grease fittings.

5. Store the machine with the roller and castor wheel standing on a hard, dry surface or board and block the roller.

6. Remove PTO drive shaft and store under hood

7. Paint the roller and touch–up any other scratches on the paintwork.

8. Replace any missing or damaged decals.

9. Store the aerator inside a dry secure building. Inside storage will reduce maintenance, give a longer working life and increase the residual value of the machine. If inside storage is not available, cover with a heavy sheet or tarpaulin and secure tightly.

The Toro General Commercial Products Warranty

A Two-Year Limited Warranty

Conditions and Products Covered

The Toro Company and its affiliate, Toro Warranty Company, pursuant to an agreement between them, jointly warrant your Toro Commercial Product ("Product") to be free from defects in materials or workmanship for two years or 1500 operational hours*, whichever occurs first. Where a warrantable condition exists, we will repair the Product at no cost to you including diagnosis, labor, parts, and transportation. This warranty begins on the date the Product is delivered to the original retail purchaser.

* Product equipped with hour meter

Instructions for Obtaining Warranty Service

You are responsible for notifying the Commercial Products Distributor or Authorized Commercial Products Dealer from whom you purchased the Product as soon as you believe a warrantable condition exists.

If you need help locating a Commercial Products Distributor or Authorized Dealer, or if you have questions regarding your warranty rights or responsibilities, you may contact us at:

Toro Commercial Products Service Department
Toro Warranty Company
8111 Lyndale Avenue South
Bloomington, MN 55420-1196
952-888-8801 or 800-982-2740
E-mail: commercial.service@toro.com

Owner Responsibilities

As the Product owner, you are responsible for required maintenance and adjustments stated in your operator's manual. Failure to perform required maintenance and adjustments can be grounds for disallowing a warranty claim.

Items and Conditions Not Covered

Not all product failures or malfunctions that occur during the warranty period are defects in materials or workmanship. This express warranty does not cover the following:

- Product failures which result from the use of non-Toro replacement parts, or from installation and use of add-on, modified, or unapproved accessories
- Product failures which result from failure to perform required maintenance and/or adjustments
- Product failures which result from operating the Product in an abusive, negligent or reckless manner
- Parts subject to consumption through use unless found to be defective. Examples of parts which are consumed, or used up, during normal Product operation include, but are not limited to, blades, reels, bedknives, tines, spark plugs, castor wheels, tires, filters, belts, etc.
- Failures caused by outside influence. Items considered to be outside influence include, but are not limited to, weather, storage practices, contamination, use of unapproved coolants, lubricants, additives, or chemicals, etc.
- Normal "wear and tear" items. Normal "wear and tear" includes, but is not limited to, damage to seats due to wear or abrasion, worn painted surfaces, scratched decals or windows, etc.

Parts

Parts scheduled for replacement as required maintenance are warranted for the period of time up to the scheduled replacement time for that part.

Parts replaced under this warranty become the property of Toro. Toro will make the final decision whether to repair any existing part or assembly or replace it. Toro may use factory remanufactured parts rather than new parts for some warranty repairs.

General Conditions

Repair by an Authorized Toro Distributor or Dealer is your sole remedy under this warranty.

Neither The Toro Company nor Toro Warranty Company is liable for indirect, incidental or consequential damages in connection with the use of the Toro Products covered by this warranty, including any cost or expense of providing substitute equipment or service during reasonable periods of malfunction or non-use pending completion of repairs under this warranty. Except for the Emissions warranty referenced below, if applicable, there is no other express warranty. All implied warranties of merchantability and fitness for use are limited to the duration of this express warranty.

Some states do not allow exclusions of incidental or consequential damages, or limitations on how long an implied warranty lasts, so the above exclusions and limitations may not apply to you.

This warranty gives you specific legal rights, and you may also have other rights which vary from state to state.

Note regarding engine warranty: The Emissions Control System on your Product may be covered by a separate warranty meeting requirements established by the U.S. Environmental Protection Agency (EPA) and/or the California Air Resources Board (CARB). The hour limitations set forth above do not apply to the Emissions Control System Warranty. Refer to the Engine Emission Control Warranty Statement printed in your operator's manual or contained in the engine manufacturer's documentation for details.

Countries Other than the United States or Canada

Customers who have purchased Toro products exported from the United States or Canada should contact their Toro Distributor (Dealer) to obtain guarantee policies for your country, province, or state. If for any reason you are dissatisfied with your Distributor's service or have difficulty obtaining guarantee information, contact the Toro importer. If all other remedies fail, you may contact us at Toro Warranty Company.

Part No. 374-0031 Rev. a