FORM NO. 3314-835

TORO®

MODEL NO. 86031-1000001 & UP

PARTS CATALOG

WHEEL HORSE®

38" (96.5 cm) RECYCLER KIT

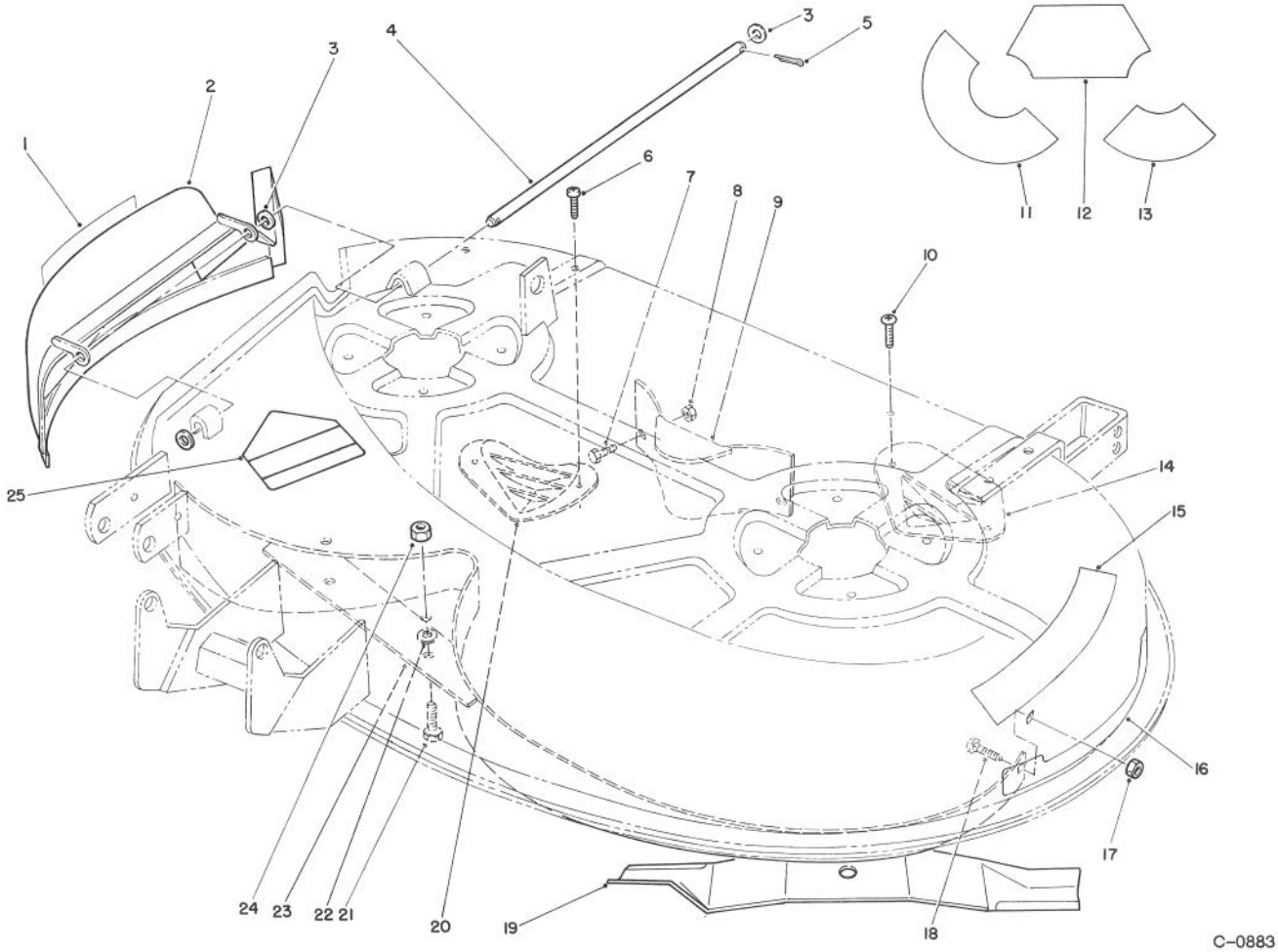

RECYCLER KIT

Ref. No.	Part No.	Description	No. Used
1	66-1340	Decal - Danger	1
2	79-1680	Assembly - Recycler Chute	1
3	920008	Washer - Flat	3
4	78-0820	Rod - Hinge	1
5	932008	Pin - Cotter	2
†6	32144-97	Screw - Pan Hd.	2
7	908002	Screw - Cap Hex. Hd.	2
8	915661	Nut - Hex.	2
9	79-1640	Baffle - Rear	1
10	32104-130	Screw - Pan Hd.	8
11	79-3900	Template - Deck	1
12	79-3890	Template - Deck	1
13	79-3910	Template - Deck	1
‡14	76-2160	Plate - Kicker	4
15	79-3140	Decal - Danger	1
16	79-1311	Decal - Recycler	1

Ref. No.	Part No.	Description	No. Used
17	915662	Nut - Hex.	1
18	900037	Bolt - Carriage	1
19	79-3060	Blade	2
†20	80-4510	Plate - Kicker	1
21	908033	Screw - Cap Hex. Hd.	2
†22	2844	Washer	2
23	79-1600	Baffle - Front	1
24	915663	Nut - Hex.	2
25	54-9220	Decal - Danger	1
*	807338	Loose Parts Bag Incl. Ref. #3-8, 10,14, 17, 18, 21 & 24))	1
*	810820	Assembly Instructions	1
*	810830	Owners Manual "L" Deck	1
*	810829	Owners Manual "S" Deck	1
*	810828	Owners Manual "Y" Deck	1

‡Note: Qty. 3 used for Y Series Tractors only. †Note: Used on Y Series Tractors Only.

TPS

*Not Illustrated

© The TORO Company - 1991