Form No. 3357-948 Rev. A

TORO®

Count on it.

Operator's Manual

LX425 Lawn Tractor

Model No. 13BX60RG744
Model No. 13BX60RG748

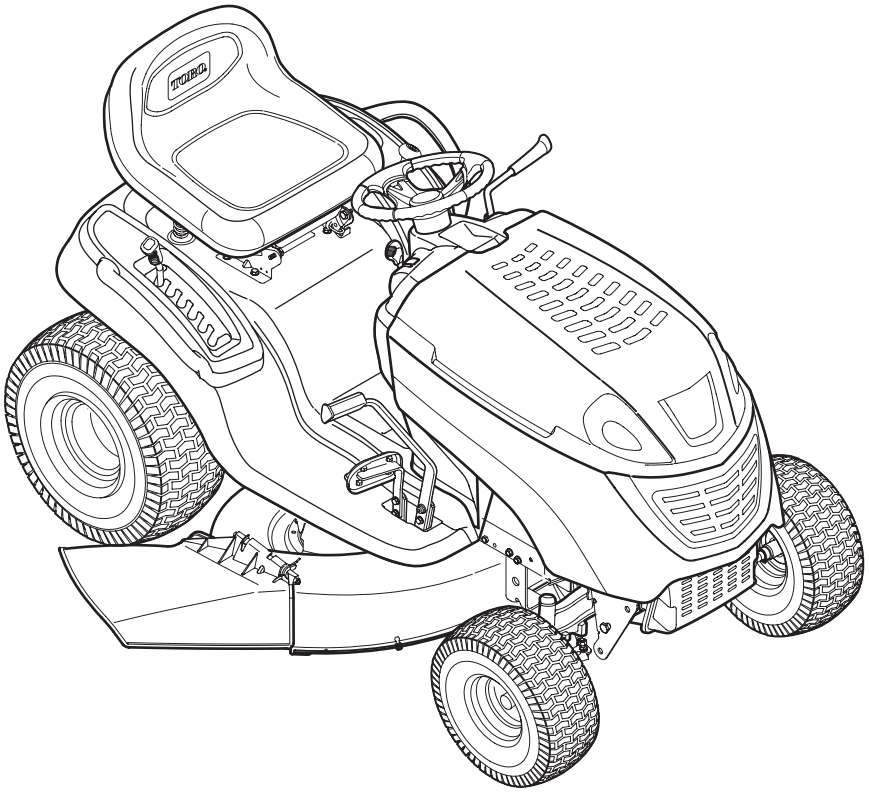

Register your product at www.Toro.com

Original Instructions (EN)
769-02824A (11/22/06)

California Proposition 65 Warning:

WARNING: Engine exhaust, some of its constituents, and certain vehicle components contain or emit chemicals known to the State of California to cause cancer and birth defects or other reproductive harm.

TABLE OF CONTENTS

Content	Page	Content	Page
Important Safe Operation Practices	3	Service	26
Slope Gauge	9	Off-season Storage	29
Tractor Set-up	10	Maintenance Chart	30
Know Your Lawn Tractor	13	Troubleshooting	31
Operating Your Lawn Tractor	16	Specifications	32
Making Adjustments	19	Warranty Information	35
Maintaining Your Lawn Tractor	21		

FINDING MODEL NUMBER

This Operator's Manual is an important part of your new lawn tractor. It will help you assemble, prepare and maintain the unit for best performance. Please read and understand what it says.

Before you start assembling your new equipment, please locate the model plate on the equipment and copy the information from it in the space provided below. A sample model plate is also illustrated below. You can locate the model plate by looking at the underside of the tractor's seat. This information will be necessary to use the manufacturer's web site and/or help from an authorized Toro service dealer.

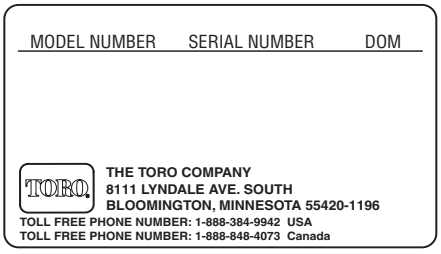

Copy the model number here: _____

Copy the serial number here: _____

CUSTOMER SUPPORT

Please do NOT return the unit to the retailer without first contacting Customer Support. If you have difficulty assembling this product or have any questions regarding the controls, operation or maintenance of this unit, you can seek help from the experts. Choose from the options below:

Visit **www.toro.com** for many useful suggestions. Click on Customer Care in the Homeowners section of the Toro Solutions Center and help is immediately available.

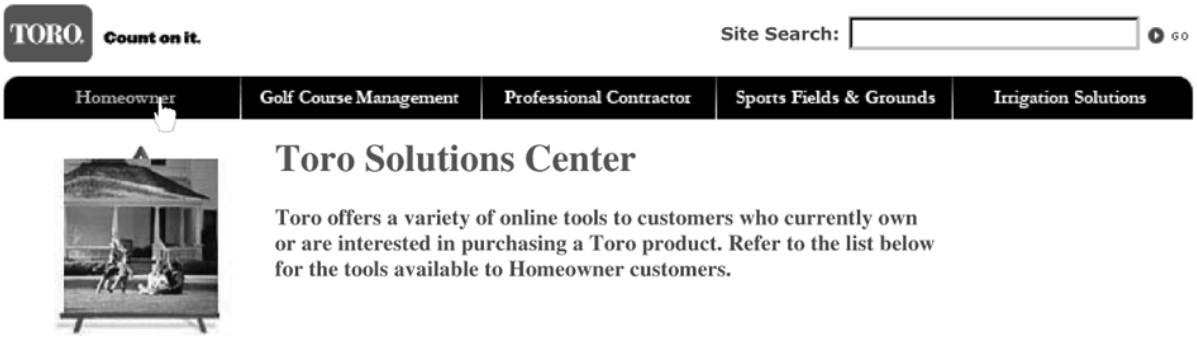

If you have questions concerning your tractor, please call us at 1-888-384-9942 (U.S.) or 1-888-848-4073 (Canada).

SECTION 1: IMPORTANT SAFE OPERATION PRACTICES

WARNING: This symbol points out important safety instructions which, if not followed, could endanger the personal safety and/or property of yourself and others. Read and follow all instructions in this manual before attempting to operate this machine. Failure to comply with these instructions may result in personal injury. When you see this symbol–heed its warning.

DANGER: This machine was built to be operated according to the rules for safe operation in this manual. As with any type of power equipment, carelessness or error on the part of the operator can result in serious injury. This machine is capable of amputating hands and feet and throwing objects. Failure to observe the following safety instructions could result in serious injury or death.

WARNING: This unit is equipped with an internal combustion engine and should not be used on or near any unimproved forest-covered, brush-covered or grass-covered land unless the engine's exhaust system is equipped with a spark arrester meeting applicable local or state laws (if any). If a spark arrester is used, it should be maintained in effective working order by the operator. In the State of California the above is required by law (Section 4442 of the California Public Resources Code). Other states may have similar laws. Federal laws apply on federal lands. A spark arrester for the muffler is available through an authorized Toro service dealer or contact Toro at 8111 Lyndale Avenue South, Bloomington, MN 55420.

GENERAL OPERATION

1. Read, understand, and follow all instructions on the machine and in the manual(s) before attempting to assemble and operate. Keep this manual in a safe place for future and regular reference.
2. Be familiar with all controls and their proper operation. Know how to stop the machine and disengage PTO/blades quickly.
3. Never allow children under 14 years old to operate this machine. Children 14 years old and over should read and understand the operation instructions and safety rules in this manual and should be trained and supervised by a parent or responsible adult.
4. Never allow adults to operate this machine without proper instruction.
5. To help avoid blade contact or a thrown object injury, keep bystanders, helpers, children and pets at least 75 feet from the machine while it is in operation. Stop machine if anyone enters the area.
6. Thoroughly inspect the area where the equipment is to be used. Remove all stones, sticks, wire, bones, toys, and other foreign objects which could be picked up and thrown by the blade(s). Thrown objects can cause serious personal injury.
7. Plan your mowing pattern to avoid discharge of material toward roads, sidewalks, bystanders and the like. Also, avoid discharging material against a wall or obstruction which may cause discharged material to ricochet back toward the operator.
8. Always wear safety glasses or safety goggles during operation and while performing an adjustment or repair to protect your eyes. Thrown objects which ricochet can cause serious injury to the eyes.
9. Wear sturdy, rough-soled work shoes and close-fitting slacks and shirts. Loose fitting clothes and jewelry can be caught in movable parts. Never operate this machine in bare feet or sandals.
10. Be aware of the mower and attachment discharge direction and do not point it at anyone. Do not operate the mower without the discharge cover or entire grass catcher in its proper place**.**
11. Do not put hands or feet near rotating parts or under the cutting deck. Contact with the blade(s) can amputate hands and feet.
12. A missing or damaged discharge cover can cause blade contact or thrown object injuries.
13. Stop the blade(s) when crossing gravel drives, walks, or roads and while not cutting grass.
14. Watch for traffic when operating near or crossing roadways. This machine is not intended for use on any public roadway.
15. Do not operate the machine while under the influence of alcohol or drugs.
16. Mow only in daylight or good artificial light.
17. Never carry passengers.
18. Disengage blade(s) before shifting into reverse. Back up slowly. Always look down and behind before and while backing to avoid a back-over accident.
19. Slow down before turning. Operate the machine smoothly. Avoid erratic operation and excessive speed.
20. Disengage blade(s), set parking brake, stop engine and wait until the blade(s) come to a complete stop before removing grass catcher, emptying grass, unclogging chute, removing any grass or debris, or making any adjustments.

21. Never leave a running machine unattended. Always turn off blade(s), place transmission in neutral, set parking brake, stop engine and remove key before dismounting.
22. Use extra care when loading or unloading the machine into a trailer or truck. This unit should not be driven up or down ramp(s), because the unit could tip over, causing serious personal injury**.** The unit must be pushed manually on ramp(s) to load or unload properly.
23. Muffler and engine become hot and can cause a burn. Do not touch.
24. Check overhead clearances carefully before driving under low hanging tree branches, wires, door openings etc., where the operator may be struck or pulled from the unit, which could result in serious injury.
25. Disengage the PTO and all attachment clutches, depress the brake pedal completely and shift into neutral before attempting to start engine.
26. Your machine is designed to cut normal residential grass of a height no more than 10". Do not attempt to mow through unusually tall, dry grass (e.g., pasture) or piles of dry leaves. Dry grass or leaves may contact the engine exhaust and/or build up on the mower deck presenting a potential fire hazard.
27. Use only accessories and attachments approved for this machine by the machine manufacturer. Read, understand and follow all instructions provided with the approved accessory or attachment.
28. Data indicates that operators, age 60 years and above, are involved in a large percentage of riding mower-related injuries. These operators should evaluate their ability to operate the riding mower safely enough to protect themselves and others from serious injury.
29. If situations occur which are not covered in this manual, use care and good judgment. Contact an authorized Toro service dealer for assistance.

SLOPE OPERATION

Slopes are a major factor related to loss of control and tip-over accidents which can result in severe injury or death. All slopes require extra caution. If you cannot back up the slope or if you feel uneasy on it, do not mow it.

For your safety, use the slope gauge included as part of this manual to measure slopes before operating this unit on a sloped or hilly area. If the slope is greater than 15 degrees as shown on the slope gauge, do not operate this unit on that area or serious injury could result.

DO:

1. Mow up and down slopes, not across. Exercise extreme caution when changing direction on slopes.
2. Watch for holes, ruts, bumps, rocks, or other hidden objects. Uneven terrain could overturn the machine. Tall grass can hide obstacles.
3. Use slow speed. Choose a low enough speed setting so that you will not have to stop or shift while on the slope. Tires may lose traction on slopes even though the brakes are functioning properly. Always keep machine in gear when going down slopes to take advantage of engine braking action.
4. Follow the manufacturer's recommendations for wheel weights or counterweights to improve stability.
5. Use extra care with grass catchers or other attachments. These can change the stability of the machine.
6. Keep all movement on the slopes slow and gradual. Do not make sudden changes in speed or direction. Rapid transmission engagement or braking could cause the front of the machine to lift and rapidly flip over backwards which could cause serious injury.
7. Avoid starting or stopping on a slope. If tires lose traction, disengage the blade(s) and proceed slowly straight down the slope.

DO NOT:

1. Do not turn on slopes unless necessary; then, turn slowly and gradually downhill, if possible.
2. Do not mow near drop-offs, ditches or embankments. The mower could suddenly turn over if a wheel is over the edge of a cliff, ditch, or if an edge caves in.
3. Do not try to stabilize the machine by putting your foot on the ground.
4. Do not use a grass catcher on steep slopes.
5. Do not mow on wet grass. Reduced traction could cause sliding.
6. Do not shift to neutral and coast downhill. Doing so may cause the operator to lose control of the machine resulting in serious injury or death.
7. Do not tow heavy pull behind attachments (e.g. loaded dump cart, lawn roller, etc.) on slopes greater than 5 degrees. When going down hill, the extra weight tends to push the tractor and may cause you to loose control. (e.g. tractor may speed up, braking and steering ability are reduced, attachment may jack-knife and cause tractor to overturn).

CHILDREN

1. Tragic accidents can occur if the operator is not alert to the presence of children. Children are often attracted to the machine and the mowing activity. They do not understand the dangers. Never assume that children will remain where you last saw them.
    a. Keep children out of the mowing area and in watchful care of a responsible adult other than the operator.
    b. Be alert and turn machine off if a child enters the area.
    c. Before and while backing, look behind and down for small children.
    d. Never carry children, even with the blade(s) shut off. They may fall off and be seriously injured or interfere with safe machine operation.
    e. Use extreme care when approaching blind corners, doorways, shrubs, trees or other objects that may block your vision of a child who may run into the machine.
    f. To avoid back-over accidents, always disengage the cutting blade(s) before shifting into reverse. The "Reverse Caution Mode" should not be used when children or others are around.
    g. Keep children away from hot or running engines. They can suffer burns from a hot muffler.
    h. Remove key when machine is unattended to prevent unauthorized operation.
2. Never allow children under 14 years old to operate the machine. Children 14 years old and over should read and understand the operation instructions and safety rules in this manual and should be trained and supervised by a parent or responsible adult.

TOWING

1. Tow only with a machine that has a hitch designed for towing. Do not attach towed equipment except at the hitch point.
2. Follow the manufacturers recommendation for weight limits for towed equipment and towing on slopes.
3. Never allow children or others in or on towed equipment.
4. Do not tow heavy pull behind attachments (e.g. loaded dump cart, lawn roller, etc.) on slopes greater than 5 degrees. When going down hill, the extra weight tends to push the tractor and may cause you to loose control. (e.g. tractor may speed up, braking and steering ability are reduced, attachment may jack-knife and cause tractor to overturn).
5. Travel slowly and allow extra distance to stop.
6. On slopes, the weight of the towed equipment may cause loss of traction and loss of control.
7. Do not shift to neutral and coast downhill.

SERVICE

SAFE HANDLING OF GASOLINE:

1. **To avoid personal injury or property damage** use extreme care in handling gasoline. Gasoline is extremely flammable and the vapors are explosive**.** Serious personal injury can occur when gasoline is spilled on yourself or your clothes which can ignite. Wash your skin and change clothes immediately.
    a. Use only an approved gasoline container.
    b. Never fill containers inside a vehicle or on a truck or trailer bed with a plastic liner. Always place containers on the ground away from your vehicle before filling.
    c. When practical, remove gas-powered equipment from the truck or trailer and refuel it on the ground. If this is not possible, then refuel such equipment on a trailer with a portable container, rather than from a gasoline dispenser nozzle.
    d. Keep the nozzle in contact with the rim of the fuel tank or container opening at all times until fueling is complete. Do not use a nozzle lock-open device.
    e. Extinguish all cigarettes, cigars, pipes and other sources of ignition.
    f. Never fuel machine indoors.
    g. Never remove gas cap or add fuel while the engine is hot or running. Allow engine to cool at least two minutes before refueling.
    h. Never over fill fuel tank. Fill tank to no more than1/2-inch below the bottom of the filler neck to allow space for fuel expansion.
    i. Replace gasoline cap and tighten securely.
    j. If gasoline is spilled, wipe it off the engine and equipment. Move unit to another area. Wait 5 minutes before starting the engine.
    k. To reduce fire hazards, keep machine free of grass, leaves, or other debris build-up. Clean up oil or fuel spillage and remove any fuel soaked debris.
    l. Never store the machine or fuel container inside where there is an open flame, spark or pilot light as on a water heater, space heater, furnace, clothes dryer or other gas appliances.
    m. Allow a machine to cool at least 5 minutes before storing.

GENERAL SERVICE:

1. Never run an engine indoors or in a poorly ventilated area. Engine exhaust contains carbon monoxide, an odorless, and deadly gas.
2. Before cleaning, repairing, or inspecting, make certain the blade(s) and all moving parts have stopped. Remove the ignition key to prevent unintended starting.
3. Periodically check to make sure the blades come to complete stop within approximately five (5) seconds after operating the blade disengagement control. If the blades do not stop within the this time frame, your unit should be serviced professionally by an authorized Toro service dealer.
4. Check brake operation frequently as it is subjected to wear during normal operation. Adjust and service as required.
5. Check the blade(s) and engine mounting bolts at frequent intervals for proper tightness. Also, visually inspect blade(s) for damage (e.g., excessive wear, bent, cracked).
   Replace the blade(s) with the original equipment manufacturer's (O.E.M.) blade(s) only. Use of parts which do not meet the original equipment specifications may lead to improper performance and compromise safety!
6. Mower blades are sharp. Wrap the blade or wear gloves, and use extra caution when servicing them.
7. Keep all nuts, bolts, and screws tight to be sure the equipment is in safe working condition.
8. Never tamper with the safety interlock system or other safety devices. Check their proper operation before each use.
9. After striking a foreign object, stop the engine and remove the ignition key to prevent unintended starting. Thoroughly inspect the machine for any damage. Repair the damage before starting and operating.
10. Never attempt to make adjustments or repairs to the machine while the engine is running.
11. Grass catcher components and the discharge cover are subject to wear and damage which could expose moving parts or allow objects to be thrown.
12. For safety protection, frequently check components and replace immediately with original equipment manufacturer's (O.E.M.) parts only. Use of parts which do not meet the original equipment specifications may lead to improper performance and compromise safety!
13. Do not change the engine governor settings or over-speed the engine. The governor controls the maximum safe operating speed of the engine.
14. Maintain or replace safety and instruction labels as necessary (i.e. when scratched, damaged or missing).
15. Observe proper disposal laws and regulations for gas, oil, etc. to protect the environment.



WARNING: YOUR RESPONSIBILITY Restrict the use of this power machine to persons who agree to read, understand and follow the warnings and instructions in this manual and on the machine.

SAFETY SYMBOLS

This operator's manual describes safety symbols and pictographs that may appear on this product.

Symbol	Meaning
	**SAFETY ALERT SYMBOL —** Indicates Danger, Warning or Caution. May be used in conjunction with other symbols or pictographs.
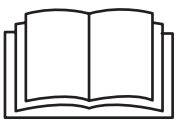	**WARNING – READ OPERATOR'S MANUAL —** Read theOperator's Manual(s) and follow all warning and safety instructions. Failure to do so can result in seriousinjury to the operator and/or bystanders.

SECTION 2: SAFETY AND INSTRUCTIONAL LABELS

Safety and instructional abels found on your lawn tractor are illustrated below (3/4 actual size). Always follow their instructions and heed their warnings. If you discover a safety label is scratched, damaged or missing, order a replacement immediately.

⚠ DANGER

ROTATING BLADES CAUSE SERIOUS INJURY OR DEATH

- DO NOT MOW WHEN CHILDREN OR OTHERS ARE AROUND
- NEVER CARRY CHILDREN EVEN WITH BLADE(S) OFF.
- LOOK DOWN AND BEHIND BEFORE AND WHILE BACKING.
- MOWING IN REVERSE IS NOT RECOMMENDED.



⚠ WARNING

TO AVOID SERIOUS INJURY OR DEATH

- GO UP AND DOWN SLOPES, NOT ACROSS.
- AVOID SUDDEN TURNS.
- DO NOT OPERATE THE UNIT WHERE IT COULD SLIP OR TIP.
- IF MACHINE STOPS GOING UPHILL, STOP BLADE(S) AND BACK DOWNHILL SLOWLY.
- KEEP SAFETY DEVICES (GUARDS, SHIELDS, AND SWITCHES, ETC.) IN PLACE AND WORKING.
- REMOVE OBJECTS THAT COULD BE THROWN BY THE BLADE(S).
- KNOW LOCATION AND FUNCTION OF ALL CONTROLS.
- BE SURE BLADE(S) AND ENGINE ARE STOPPED BEFORE PLACING HANDS OR FEET NEAR BLADE(S).
- BEFORE LEAVING OPERATOR'S POSITION, DISENGAGE BLADE(S), ENGAGE PARKING BRAKE, SHUT OFF AND REMOVE KEY.

READ OPERATOR'S MANUAL

TO START

1. DISENGAGE BLADES/PTO, *(POWER TAKE OFF)*
2. ENGAGE THE TRACTOR'S PARKING BRAKE.
3. ACTIVATE THE CHOKE CONTROL.
4. TURN KEY TO START ENGINE. AFTER START RELEASE KEY & DEACTIVATE CHOKE BY PLACING THROTTLE TO FAST *"RABBIT"* POSITION.

OPERATING MODES

NORMAL MOWING

YOU MUST DISENGAGE BLADES/PTO, *(POWER TAKE OFF)* BEFORE TRAVELING IN REVERSE.

REVERSE CAUTION MODE

1. TURN KEY TO REVERSE CAUTION MODE POSITION.
2. DEPRESS REVERSE PUSH BUTTON. (RED INDICATOR LIGHT "ON")

WHEN RED LIGHT IS "ON" MACHINE CAN BE OPERATED IN REVERSE WITH MOWER BLADES ENGAGED.
IMPORTANT: MOWING IN REVERSE IS NOT RECOMMENDED.

3. AFTER RESUMING FORWARD OPERATION, RETURN KEY TO "NORMAL MOWING" POSITION.

NOTE: IN BOTH MODES, WHEN OPERATOR LEAVES SEAT, ENGINE WILL STOP UNLESS PARKING BRAKE IS SET AND BLADES ARE DISENGAGED.

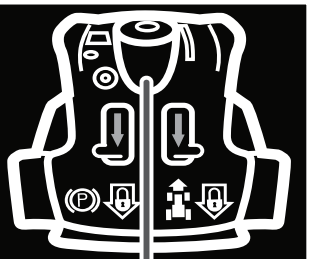

PARKING BRAKE

DEPRESS BRAKE PEDAL, PUSH PARKING BRAKE LEVER DOWN AND RELEASE PEDAL TO LOCK

CRUISE CONTROL

DEPRESS SPEED CONTROL PEDAL TO DESIRED SPEED. PUSH CRUISE CONTROL LEVER DOWN AND RELEASE PEDAL. PRESS BRAKE OR SPEED CONTROL TO RELEASE



SPEED CONTROL PEDAL

PRESS PEDAL DOWN TO INCREASE SPEED



Part No. 112-1262



Part No. 112-1265

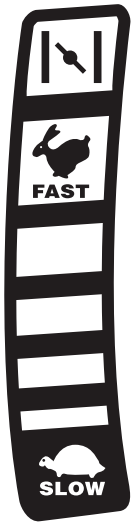

Part No. 112-1271



Part No. 112-1274



Part No. 112-1266

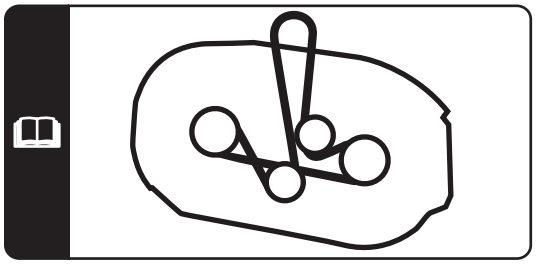

Part No. 112-1270



Part No. 112-1267

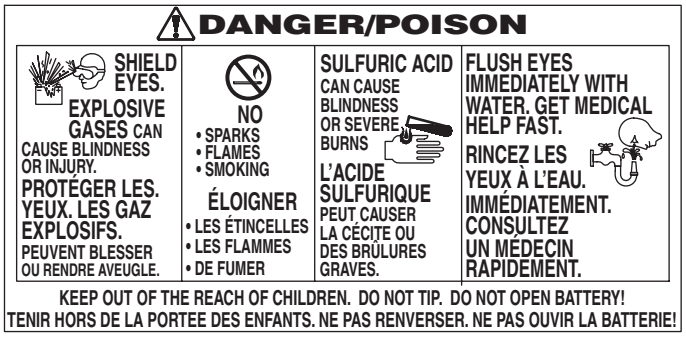

SECTION 3: SLOPE GAUGE

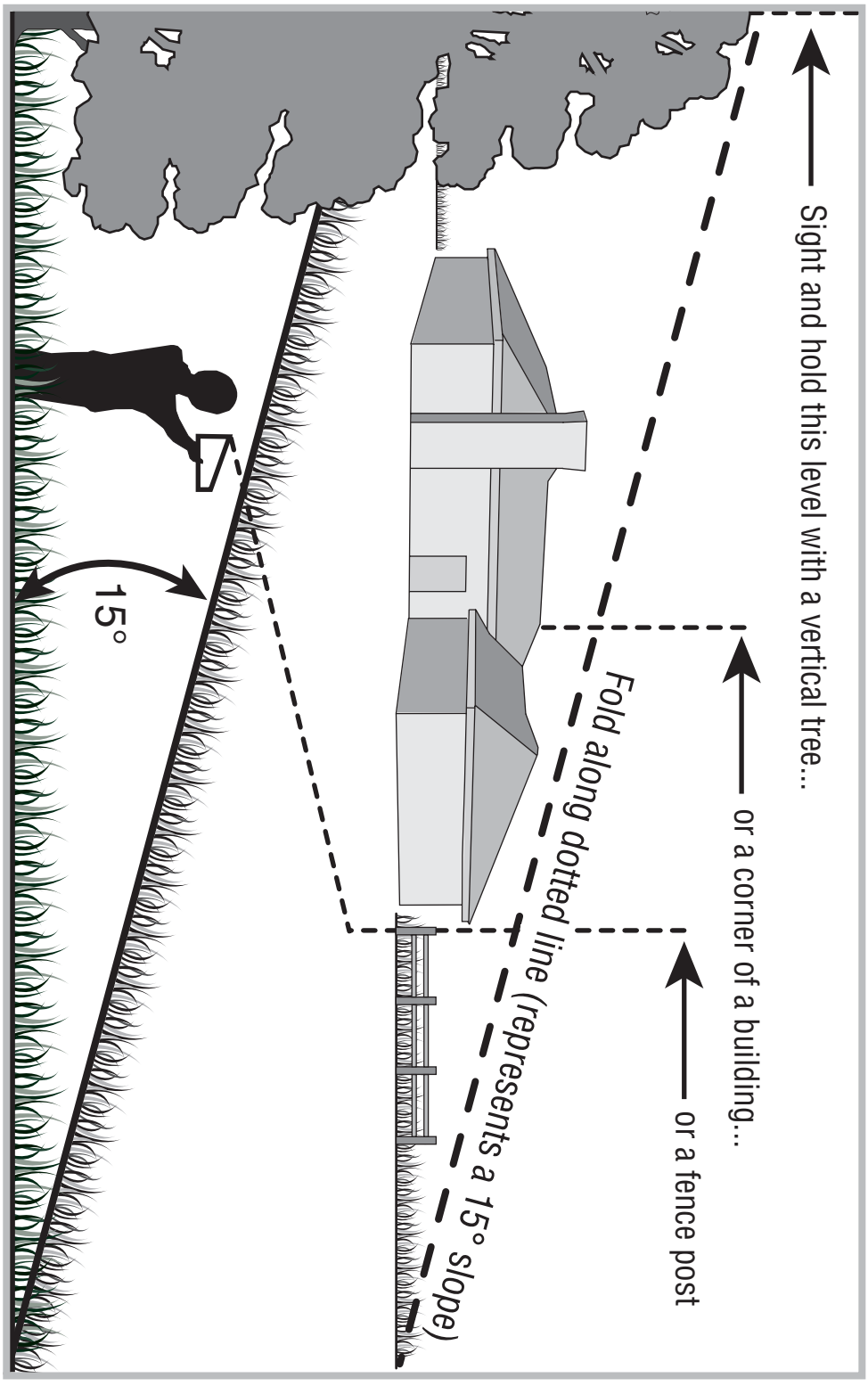

SECTION 4: TRACTOR SET-UP

Attaching The Steering Wheel

Tools Required

(1) 1/2" socket wrench

1. The hardware for attaching the steering wheel has been packed within the steering wheel, beneath steering wheel cap. Carefully pry off the steering wheel cap and remove the hardware.
2. **With the wheels of the tractor pointing straight forward,** place the steering wheel over the steering shaft.
3. Place the washer (with the cupped side down) over the steering shaft and secure with the hex bolt. See Figure 1.

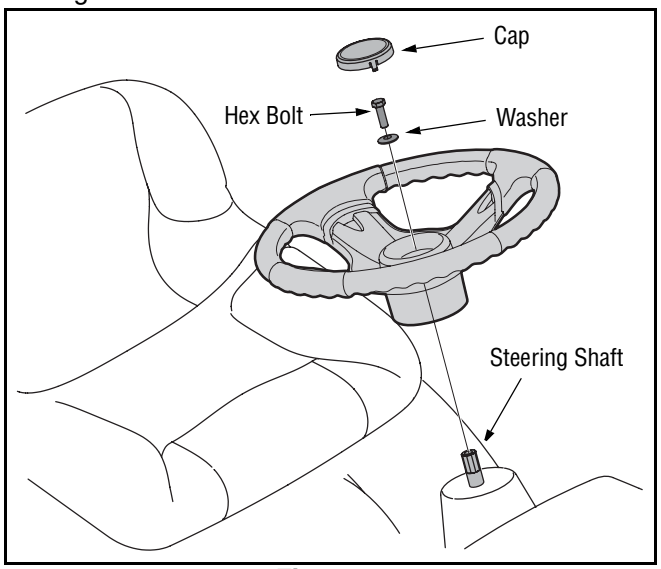

Figure 1

4. Place the steering wheel cap over the center of the steering wheel and push downward until it “clicks” into place.

Attaching the Battery Cables

Tools Required

(1) 7/16" wrench

WARNING: California Proposition 65 Warning: Battery posts, terminals, and related accessories contain lead and lead compounds, chemicals known to the State of California to cause cancer and reproductive harm. *Wash hands after handling.*

NOTE: *Your tractor’s battery cables may have already be attached at the factory.*

NOTE: *The positive battery terminal is marked Pos. (+). The negative battery terminal is marked Neg. (–).*

- The positive cable (heavy red wire) is secured to the positive battery terminal (+) with a carriage bolt and hex nut at the factory. Make certain that the rubber boot covers the terminal to help protect it from corrosion.
- Remove the carriage bolt and hex nut from the negative cable.
- Remove the black plastic cover, if present, from the negative battery terminal and attach the negative cable (heavy black wire) to the negative battery terminal (–) with the bolt and hex nut.
- Make certain the hold-down rod is in position over the battery, securing it in place. See Figure 2.

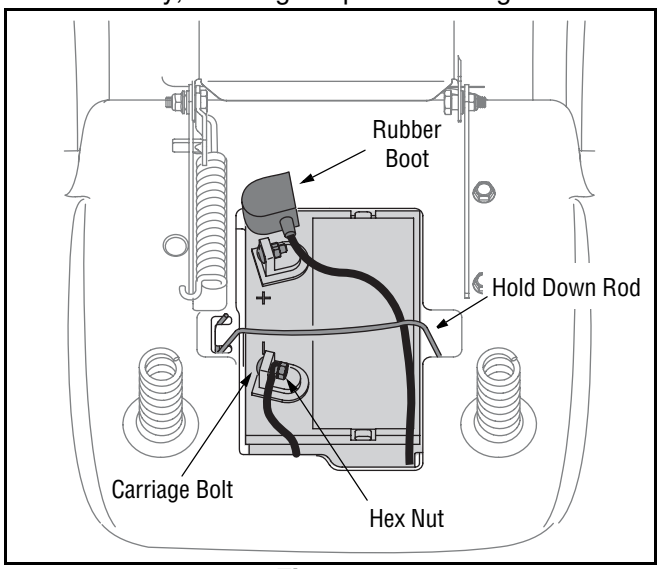

Figure 2

NOTE: *If the battery is put into service after the date shown on top/side of battery, charge the battery as instructed* on *page 27 of this manual prior to operating the tractor.*

Tire Pressure

WARNING: Never exceed the maximum inflation pressure shown on the sidewall of the tire.

The tires on your unit may be over-inflated for shipping purposes. Reduce the tire pressure before operating the tractor. Recommended operating tire pressure is approximately 10 p.s.i for the rear tires and 14 p.s.i. for the front tires. Check sidewall of tire for maximum p.s.i.

Attaching The Seat

1. Remove the two knobs from the bottom of seat.
2. Position the shoulder screws (found on the base of the seat) inside the slot openings in the seat pivot bracket.
3. Slide the seat slightly rearward in the seat pivot bracket, lining up the rear slots in the pivot bracket with the remaining two holes in the seat's base.
4. Select desired position for the seat, and secure with the two knobs removed earlier. See Figure 3.

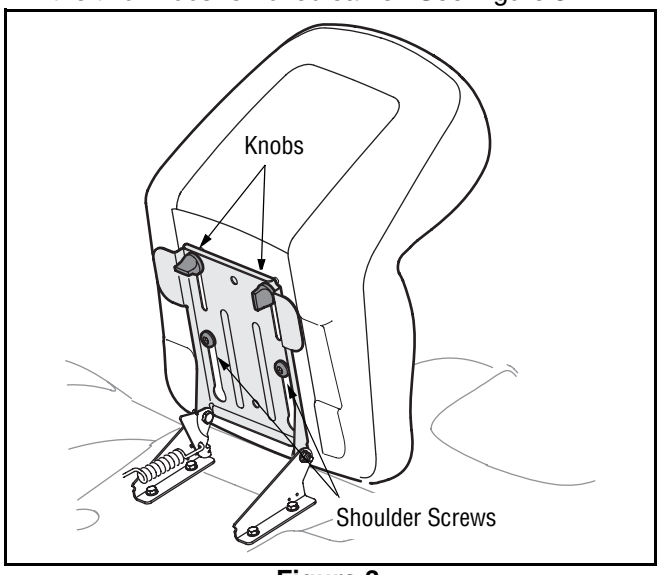

Figure 3

Shipping Brace Removal

WARNING: Make sure the riding mower's engine is off, set the parking brake and remove the ignition key before removing the shipping brace.

- Locate the shipping brace, if present, and warning tag found on the right side of the cutting deck. See Figure 4.
- While holding the discharge chute with your left hand, remove the shipping brace with your right hand by grasping it between your thumb and index finger and rotating it clockwise.

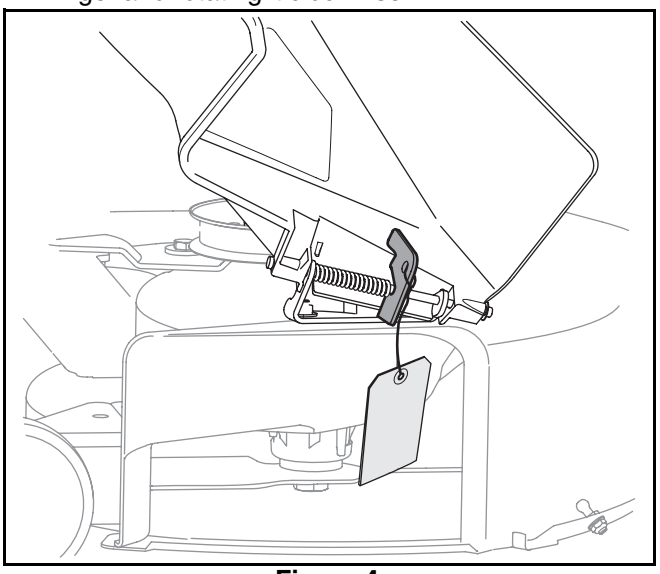

Figure 4

WARNING: The shipping brace, used for packaging purposes only, must be removed and discarded before operating your riding mower.

WARNING: The mowing deck is capable of throwing objects. Failure to operate the riding mower without the discharge cover in the proper operating position could result in serious personal injury and/or property damage.

Setting the Gauge Wheels

Tools Required

(2) 9/16" wrenches

Select the height position of the cutting deck by placing the deck lift lever in any of the six different cutting height notches on the right fender.

Adjust the deck wheels so that they are between ¼-inch and ½-inch above the ground as follows.

WARNING: Keep hands and feet away from the discharge opening of the cutting deck.

Place the tractor on a firm and level surface, preferably pavement, refer to Figure 5, and proceed as follows:

- Place the tractor's deck lift handle in the normally desired mowing height setting, then check the gauge wheels for contact or excessive clearance with the surface below. There should be approximately 1/2" clearance.
- If the wheels contact the surface adjust as follows:
  a. Raise the deck lift handle to its highest setting.
  b. Remove the rear gauge wheels by removing the lock nuts and shoulder screws which secure them to the deck.
  c. Place the deck lift handle in the desired mowing height setting.
  d. Insert the shoulder screw with the rear gauge wheel into the index hole that leaves approximately 1/2" between the bottom of the wheel and the pavement. See Figure 5.

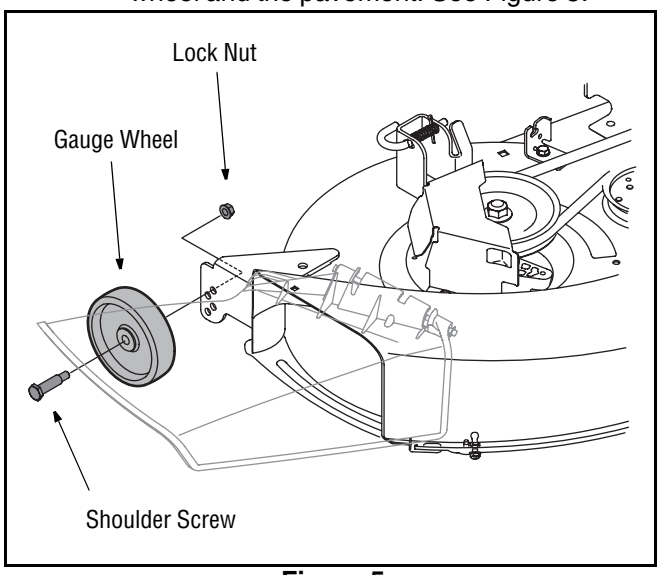

Figure 5

  e. Note the position of the index hole used; then install the other rear gauge wheel into the corresponding index hole of the other gauge wheel brackets.
- If the gauge wheels have excessive clearance with the surface below, lower the wheels to the index hole that provides the approximate 1/2" clearance as described above.

Refer to **Leveling the Deck** on page 19 of this manual for more detailed instructions regarding various deck adjustments.

Gas and Oil Fill-up

WARNING: Use extreme care when handling gasoline. Gasoline is extremely flammable and the vapors are explosive. Never fuel machine indoors or while the engine is hot or running. Extinguish cigarettes, cigars, pipes, and other sources of ignition before filling the fuel tank.

Use only clean, fresh (under 30 days old), unleaded gasoline. Fill tank to no more than 1/2 inch below the top of the filler neck to allow space for fuel expansion. See Figure 6.

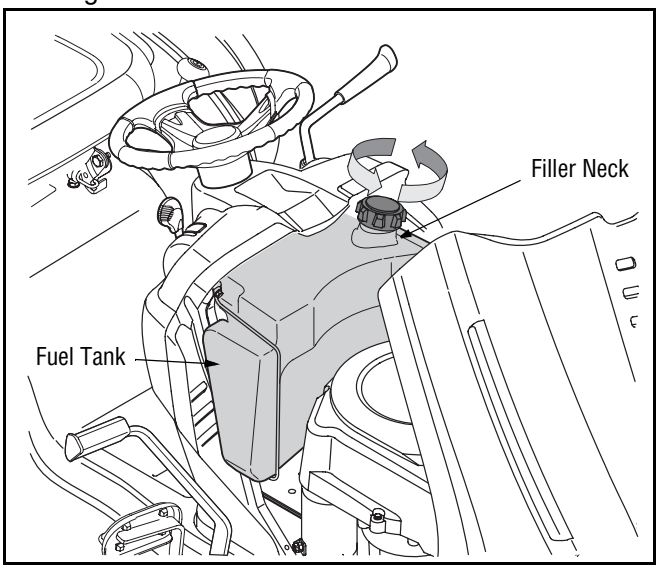

Figure 6

IMPORTANT: You tractor is shipped with oil in the engine. However, you MUST check the oil level before operating. Refer to **Checking the Oil Level** on page 21 for detailed instructions.

SECTION 5: KNOW YOUR LAWN TRACTOR

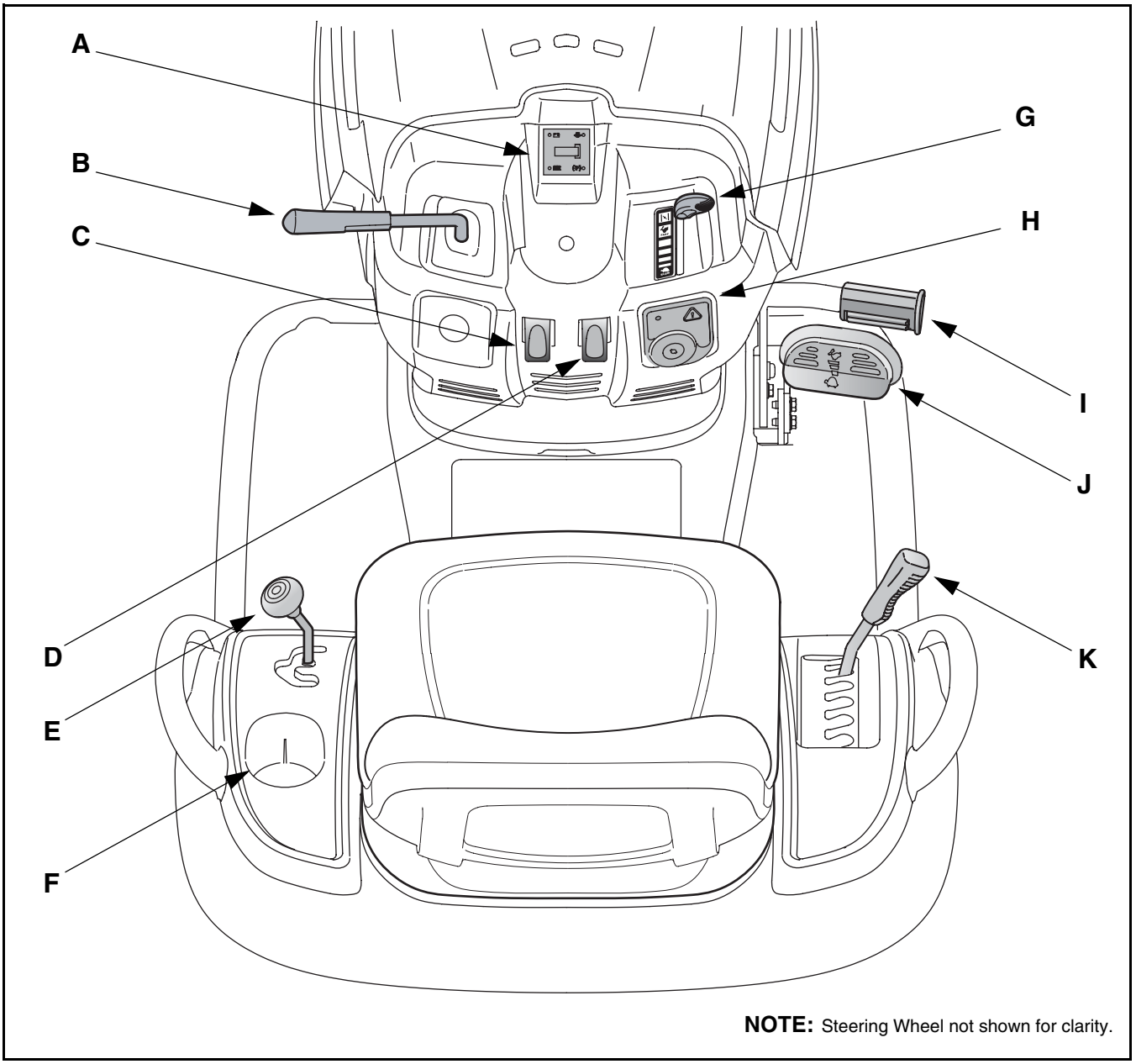

Figure 7

- **A** Systems Indicator Monitor/Hour Meter
- **B** PTO (Blade Engage) Lever
- **C** Parking Brake Lever
- **D** Cruise Control Lever
- **E** Shift Lever
- **F** Cup Holder
- **G** Throttle / Choke Control
- **H** Ignition Switch Module
- **I** Brake Pedal
- **J** Drive Pedal
- **K** Deck Lift Lever

NOTE: *Any reference in this manual to the RIGHT or LEFT side of the tractor is observed from operator's position.*

Throttle / Choke Control

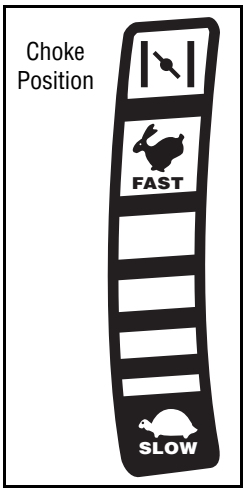

The throttle/choke control is located on the right side of the tractor's dash panel. This lever controls the speed of the engine and, when pushed all the way forward, closes the choke for cold starting. When set in a given position, the throttle will maintain a uniform engine speed.

IMPORTANT: When operating the tractor with the cutting deck engaged, be certain that the throttle/choke control is **always** in the FAST (rabbit) position.

Brake Pedal

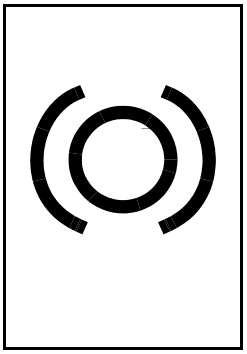

The brake pedal is located on the right front side of the tractor above the drive pedal along the running board. The brake pedal can be used for sudden stops or setting the parking brake.

NOTE: *The brake pedal must be fully depressed to activate the safety interlock switch when starting the tractor.*

Shift Lever

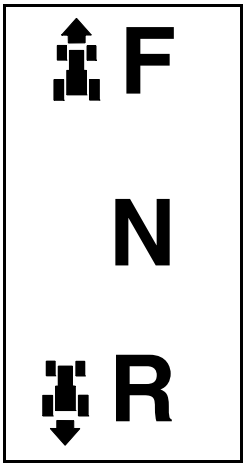

The shift lever is located on the left side of the fender and has three positions, FORWARD, NEUTRAL and REVERSE. The brake pedal must be depressed and the tractor must not be in motion when the moving shift lever.

IMPORTANT: Never force the shift lever. Doing so may result in serious damage to the tractor's transmission.

Deck Lift Lever

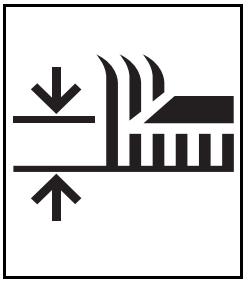

Found on your tractor's right fender, the deck lift lever is used to change the height of the cutting deck. To use, move the lever to the left, then place in the notch best suited for your application.

Ignition Switch Module

WARNING: Never leave a running machine unattended. Always disengage the PTO, move the shift lever into Neutral, set the parking brake, stop the engine and remove the key to prevent unintended starting.

To start the engine, insert the key into the ignition switch and turn clockwise to the **START** position. Release the key into the **NORMAL MOWING MODE** position once the engine has fired.

To stop the engine, turn the ignition key counterclockwise to the **STOP** position. See Figure 8.

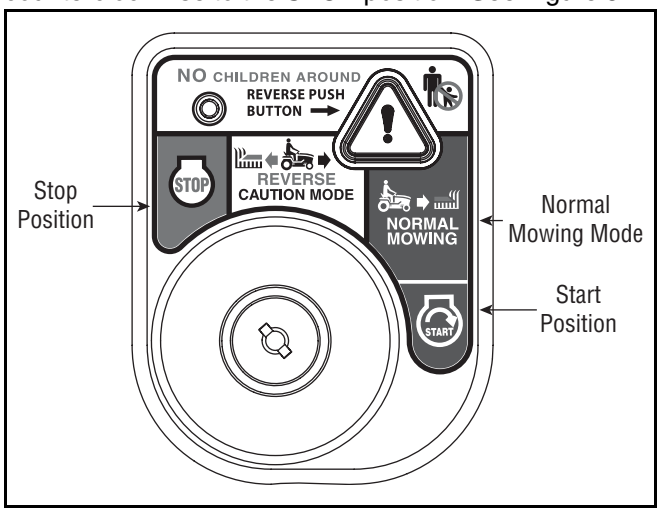

Figure 8

IMPORTANT: Prior to operating the tractor, refer to **Safety Interlock System** on page 16 and **Reverse Caution Mode** on page 16 of this manual for detailed instructions regarding the Ignition Switch Module and operating the tractor in **REVERSE CAUTION MODE**.

Drive Pedal

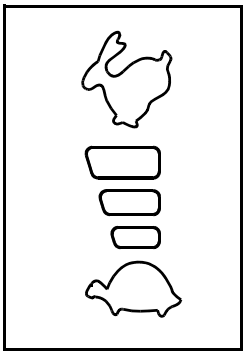

The drive pedal is located below the brake pedal on the right front side of the tractor along the running board. Depress the drive pedal with your right foot when the tractor shift lever is in either FORWARD or REVERSE to cause the tractor to move. Ground speed is also controlled with the drive pedal. The further down the pedal is depressed, the faster the tractor will travel. The pedal will return to its original position when released.

Systems Indicator Monitor / Hour Meter

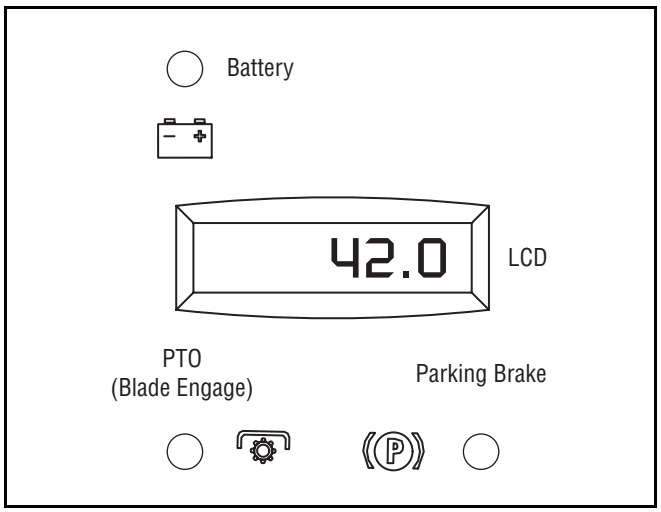

LCD

Located in the center of the tractor's console, the systems indicator monitor records, and displays on its LCD, hours of tractor operation whenever the ignition key is rotated out of the STOP position.

The Indicator Monitor will also remind the operator of maintenance intervals for changing the engine oil. The LCD will alternately flash the recorded hours, "CHG" and "OIL" for five minutes, after every 50 hours of recorded operation elapse. The maintenance interval lasts for two hours (from 50-52, 100-102, 150-152, etc.). The LCD will also flash as described above for five minutes every time the tractor's engine has been started during this maintenance interval. Before the interval expires, change the crankcase oil as instructed on page 22 of this manual.

Brake

If the Brake light illuminates when attempting to start the tractor's engine, depress the brake pedal.

PTO (Blade Engage)

If the PTO light illuminates when attempting to start the tractor's engine, move the PTO lever into the disengaged (OFF) position.

Battery

It is normal for the Battery light to illuminate while the engine is **cranking** during start-up, but if it illuminate's during operation, **while the engine is running**, the battery is in need of a charge or the engine's charging system is not generating sufficient amperage. Refer to the **MAINTAINING YOUR LAWN TRACTOR** section of this manual for the proper battery charging procedure or have the charging system checked by an authorized Toro service dealer.

PTO (Blade Engage) Lever

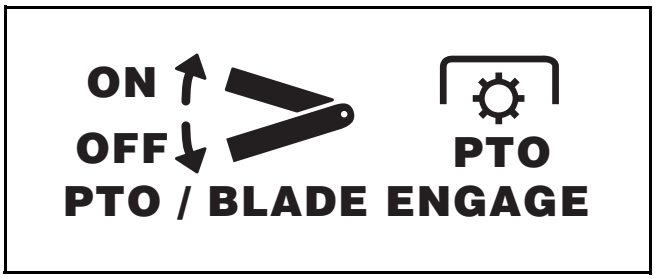

The PTO (Blade Engage) lever is located on the left side of the dash, next to the steering wheel. Move the PTO (Blade Engage) lever forward to engage the power to the cutting deck or other (separately available) attachments; move the PTO (Blade Engage) lever rearward to disengage the power to the attachments.

NOTE: *The PTO (Blade Engage) lever **must** be in the disengaged (OFF) position when starting the engine.*

Cruise Control Lever

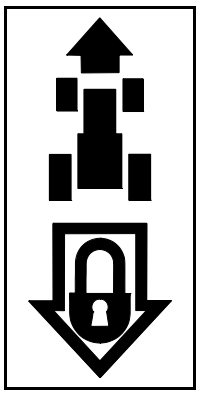

The cruise control lever is located on the tractor dash panel, below the steering wheel. Push the cruise control lever downward while traveling forward at a desired speed. While holding the lever down, release pressure from the drive pedal.

This will engage the cruise control and allow the tractor to remain at that speed without applying pressure to the drive pedal. Depress the brake pedal or the drive pedal to deactivate cruise control. Refer to page 17 for detailed instructions regarding cruise control.

NOTE: *Cruise control **cannot** be engaged at the tractor's fastest ground speed. If the operator should attempt to do so, the tractor will automatically decelerate to the fastest optimal mowing ground speed.*

Parking Brake Lever

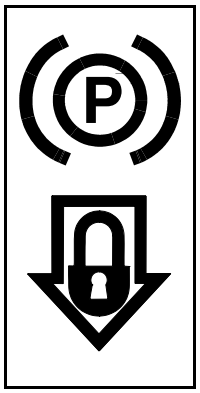

To set the parking brake, fully depress the brake pedal and push the parking brake lever down. Hold the lever down while taking your foot off the brake pedal. Both the parking lever and the brake pedal will then stay depressed. To release the parking brake, depress the brake pedal slightly. The parking brake lever will then return to its original position.

IMPORTANT: Always set the parking brake when leaving the tractor unattended.

SECTION 6: OPERATING YOUR LAWN TRACTOR

Safety Interlock System

This tractor is equipped with a safety interlock system for the protection of the operator. Before each use, check the safety interlock system for proper operation. If the interlock system should ever malfunction, do not operate the tractor. Contact an authorized Toro service dealer.

- The safety interlock system prevents the engine from cranking or starting unless the parking brake is engaged, and the PTO (Blade Engage) lever is in the disengaged (OFF) position. To check for proper operation, move the PTO (Blade Engage) lever into the engaged (ON) position and release the parking brake. Attempts to start the tractor's engine should fail.
- The engine will automatically shut off if the operator leaves the seat before engaging the parking brake. To check for proper operation, start the tractor's engine, release the parking brake and momentarily raise yourself from the seat. The engine should stall.
- The engine will automatically shut off if the operator leaves the tractor's seat with the PTO (Blade Engage) lever in the engaged (ON) position, regardless of whether the parking brake is engaged. To check for proper operation, start the tractor's engine, move the PTO (Blade Engage) lever in the engaged (ON) position and momentarily raise yourself from the seat. The engine should stall.
- With the ignition key in the **NORMAL MOWING** position, the engine will automatically shut off if the PTO (Blade Engage) lever is moved into the engaged (ON) position with the shift lever in Reverse. To check for proper operation, start the tractor's engine with the ignition key in the **NORMAL MOWING** position, move the PTO (Blade Engage) lever in the engaged (ON) position, and place the shift lever into REVERSE. The engine should stall.

WARNING: Do not operate the tractor if the interlock system is malfunctioning. This system was designed for your safety and protection.

Reverse Caution Mode

The **REVERSE CAUTION MODE** position of the key switch module allows the tractor to be operated in reverse with the blades (PTO) engaged.

IMPORTANT: *Mowing in reverse is not recommended.*

WARNING: Use extreme caution while operating the tractor in the **REVERSE CAUTION MODE.** Always look down and behind before and while backing. Do not operate the tractor when children or others are around. Stop the tractor immediately if someone enters the area.

To use the **REVERSE CAUTION MODE**:

IMPORTANT: *The operator MUST be seated in the tractor seat.*

1. Start the engine as previously instructed in this Operator's Manual.
2. Turn the key from the **NORMAL MOWING** (Green) position to the **REVERSE CAUTION MODE** (White) position of the key switch module. See Figure 9.
3. Depress the **REVERSE PUSH BUTTON** (Orange, Triangular Button) at the top, right corner of the key switch module. The red indicator light at the top, left corner of the key switch module will be **ON** while activated. See Figure 9.
4. Once activated (indicator light **ON**), the tractor can be driven in reverse with the cutting blades (PTO) engaged.
5. Always look down and behind before and while backing to make sure no children are around.
6. After resuming forward motion, return the key to the **NORMAL MOWING** position.

IMPORTANT: The **REVERSE CAUTION MODE** will remain activated until:

a. The key is placed in either the **NORMAL MOWING** position or **STOP** position.
b. The operator leaves the seat.

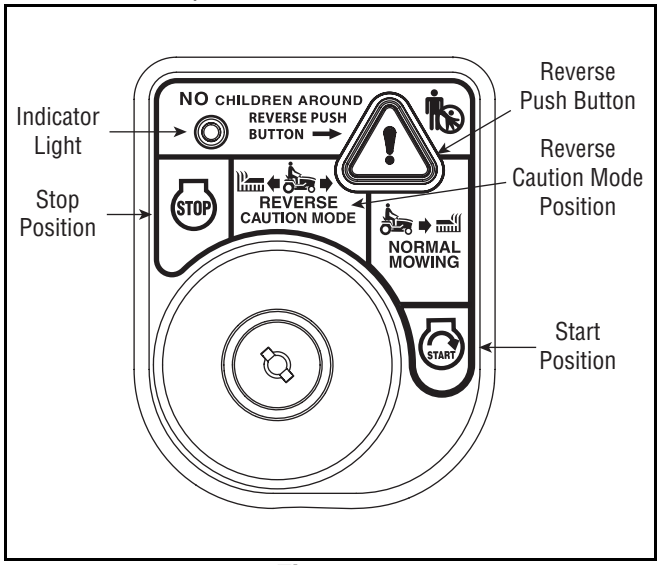

Figure 9

Starting the Engine

WARNING: Do not operate the tractor if the interlock system is malfunctioning. This system was designed for your safety and protection.

NOTE: *Refer to the* **TRACTOR SET-UP** *on page 10 of this manual for Gasoline and Oil fill-up instructions.*

1. Insert the tractor key into the ignition switch module.
2. Place the PTO (Blade Engage) lever in the disengaged (OFF) position.
3. Engage the tractor's parking brake.
4. Activate the choke control.
5. Turn the ignition key clockwise to the START position. After the engine starts, release the key. It will return to the **NORMAL MOWING** position.

IMPORTANT: Do NOT hold the key in the START position for longer than ten seconds at a time. Doing so may cause damage to your engine's electric starter.

6. After the engine starts, deactivate the choke control.

NOTE: *Do NOT leave the choke control on while operating the tractor. Doing so will result in a "rich" fuel mixture and cause the engine to run poorly.*

Stopping the Engine

WARNING: If you strike a foreign object, stop the engine and remove the ignition key. Thoroughly inspect the machine for any damage. Repair the damage before restarting and operating

1. If the blades are engaged, place the PTO/Blade Engage lever in the disengaged (OFF) position.
2. Position the throttle/choke control between half-throttle and the FAST (rabbit) position
3. Turn the ignition key counterclockwise to the STOP position.
4. Remove the key from the ignition switch to prevent unintended starting.

Driving The Tractor

WARNING: Avoid sudden starts, excessive speed and sudden stops.

WARNING: Do not leave the seat of the tractor without first placing the PTO (Blade Engage) lever in the disengaged (OFF) position, depressing the brake pedal and engaging the parking brake. If leaving the tractor unattended, also turn the ignition key off and remove the key.

1. Depress the brake pedal to release the parking brake and let the pedal up.
2. Move the throttle/choke control into the FAST (rabbit) position.

IMPORTANT: Do NOT use the shift lever to change the direction of travel when the tractor is in motion. Always use the brake pedal to bring the tractor to a complete stop before shifting.

3. To move forward, place the shift lever in the FORWARD position, then slowly depress the drive pedal until the desired speed is achieved.
4. To move in reverse, place the shift lever in the REVERSE position, check that the area behind is clear then slowly depress the drive pedal.

Driving On Slopes

Refer to the **SLOPE GAUGE** on page 9 to help determine slopes where you may operate the tractor safely.

WARNING: Do not mow on inclines with a slope in excess of 15 degrees (a rise of approximately 2-1/2 feet every 10 feet). The tractor could overturn and cause serious injury.

- Mow up and down slopes, NEVER across.
- Exercise extreme caution when changing direction on slopes.
- Watch for holes, ruts, bumps, rocks, or other hidden objects. Uneven terrain could overturn the machine. Tall grass can hide obstacles.
- Avoid turns when driving on a slope. If a turn must be made, turn down the slope. Turning up a slope greatly increases the chance of a roll over.
- Avoid stopping when driving up a slope. If it is necessary to stop while driving up a slope, start up smoothly and carefully to reduce the possibility of flipping the tractor over backward.

Setting The Cruise Control

WARNING: Never engage cruise control while traveling in Reverse.

1. Slowly depress the drive pedal until the desired speed is achieved.
2. Lightly depress the cruise control lever.
3. While continuing to hold the cruise lever down, lift your foot from the drive pedal (you should feel the cruise latch engage).
4. Once engaged, the cruise control lever and the drive pedal will lock in the "down" position, and the tractor will maintain the same forward speed.

NOTE: *Cruise control can not be set at the tractor's fastest ground speed. If the operator should attempt to do so, the tractor will automatically decelerate to the fastest optimal mowing ground speed.*

Disengage the cruise control using one of the following methods:

- Depress the brake pedal to disengage the cruise control and stop the tractor.
- Lightly depress the drive pedal.

To change to the reverse direction when operating with cruise control, depress the brake pedal to disengage the cruise control and bring the tractor to a complete stop. Place the shift lever in the REVERSE position and depress the drive pedal.

Using the Deck Lift Lever

To raise the cutting deck, move the deck lift lever to the left, then place it in the notch best suited for your application.

Engaging the Parking Brake

To engage the parking brake:

1. Fully depress the brake pedal and hold it while gently pushing the parking brake lever downward.
2. Hold the parking brake lever down while removing your foot from the brake pedal.
3. Once engaged, the parking brake lever and the brake pedal will lock in the "down" position.

To disengage the parking brake, slightly depress the brake pedal.

NOTE: *The parking brake must be engaged if the operator leaves the seat with the engine running or the engine will automatically shut off.*

Engaging the Blades

Engaging the PTO (Blade Engage) transfers power to the cutting deck or other (separately available) attachments. To engage the blades, proceed as follows:

1. Move the throttle/choke control to the FAST (rabbit) position.
2. Grasp the PTO (Blade Engage) lever and pivot it all the way forward into the engaged (ON) position. See Figure 10.
3. Keep the throttle/choke control in the FAST (rabbit) position for the most efficient use of the cutting deck or other (separately available) attachments

IMPORTANT: The engine will automatically shut off if the PTO is engaged with the shift lever in position for reverse travel and the ignition key in the **NORMAL MOWING** position. Refer to **Safety Interlock System** on page 16.

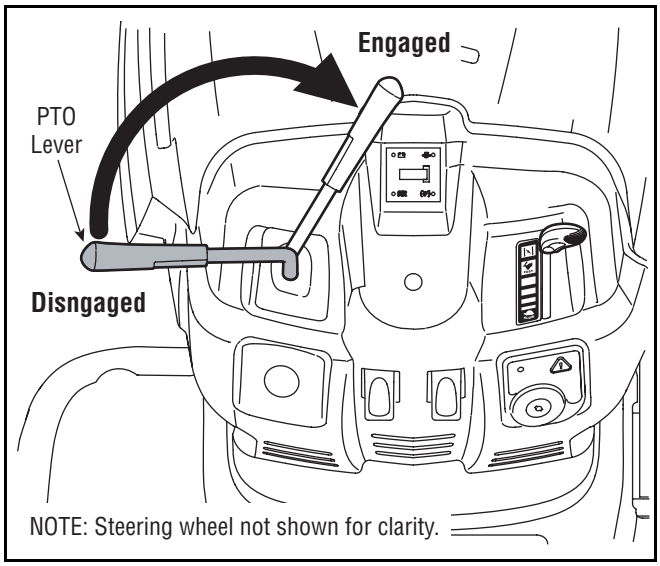

Figure 10

Mowing

WARNING: To help avoid blade contact or a thrown object injury, keep bystanders, helpers, children and pets at least 75 feet from the machine while it is in operation. Stop machine if anyone enters the area.

The following information will be helpful when using the cutting deck with your tractor.

WARNING: Plan your mowing pattern to avoid discharge of materials toward roads, sidewalks, bystanders and the like. Also, avoid discharging material against a wall or obstruction which may cause discharged material to ricochet back toward the operator.

- Do not mow at high ground speed, especially if a mulch kit or grass collector is installed.
- For best results it is recommended that the first two laps be cut with the discharge thrown towards the center. After the first two laps, reverse the direction to throw the discharge to the outside for the balance of cutting. This will give a better appearance to the lawn.
- Do not cut the grass too short. Short grass invites weed growth and yellows quickly in dry weather.
- Mowing should always be done with the throttle control in the FAST (rabbit) position.
- Under heavy conditions it may be necessary to go over the cut area a second time to get a clean cut.
- Do NOT attempt to mow heavy brush and weeds and extremely tall grass. Your tractor is designed to mow lawns, NOT clear brush.
- Keep the blades sharp and replace the blades when worn. Refer to **Cutting Blades** on page 26 of this manual for proper blade sharpening instructions.

SECTION 7: MAKING ADJUSTMENTS

WARNING: Never attempt to make any adjustments while the engine is running,

Seat Adjustment

To adjust the position of the seat, loosen the two knobs on the bottom of the seat. See Figure 11. Slide the seat forward or rearward as desired. Retighten the two knobs.

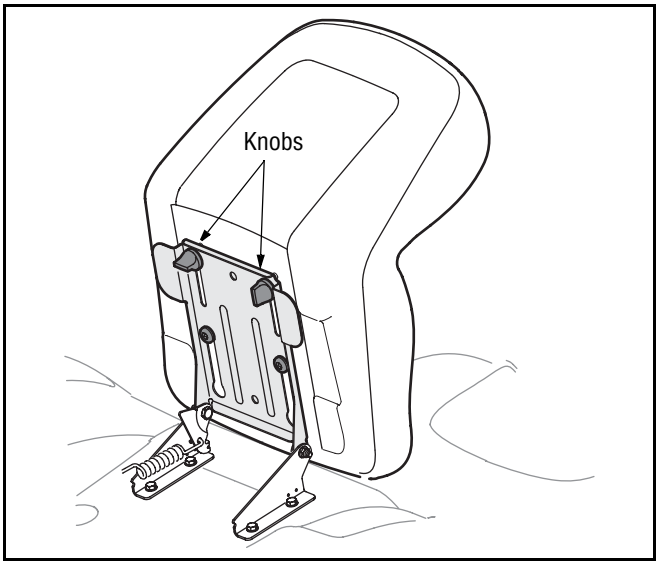

Figure 11

Leveling the Deck

NOTE: *Check the tractor's tire pressure before performing any deck leveling adjustments. Refer to* **Tires** *on page 26 for information regarding tire pressure.*

Front To Rear

The front of the cutting deck is supported by a stabilizer bar that can adjusted to level the deck from front to rear. The front of the deck should be between 1/4-inch and 3/8-inch lower than the rear of the deck. Adjust if necessary as follows:

1. With the tractor parked on a firm, level surface, place the deck lift lever in the top notch (highest position) and rotate the blade nearest the discharge chute so that it is parallel with the tractor.
2. Measure the distance from the front of the blade tip to the ground and the rear of the blade tip to the ground.
3. The first measurement taken should be between 1/4" and 3/8" less than the second measurement.
4. Determine the approximate distance necessary for proper adjustment and proceed, if necessary, to the next step.
5. From the front of the tractor, loosen the outermost hex lock nut on the end of the deck hanger rod. See Figure 12.
6. Tighten the inner hex nut front against the front hanger bracket to raise the front of the deck; loosen the hex nut to lower the front of the deck. See Figure 12.

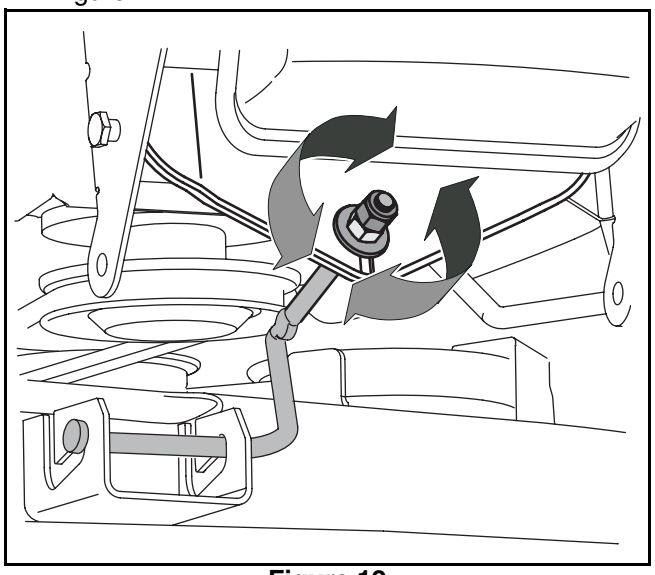

Figure 12

7. Retighten the two lock nuts against the inner hex nuts when proper adjustment is achieved.

Side to Side

If the cutting deck appears to be mowing unevenly, a side to side adjustment can be performed. Adjust if necessary as follows:

1. With the tractor parked on a firm, level surface, place the deck lift lever in the top notch (highest position) and rotate both blades so that they are perpendicular with the tractor.
2. Measure the distance from the outside of the left blade tip to the ground and the distance from the outside of the right blade tip to the ground. Both measurements taken should be equal. If they're not, proceed to the next step.
3. Loosen, but do NOT remove, the hex bolt on the left deck hanger bracket. See Figure 13.

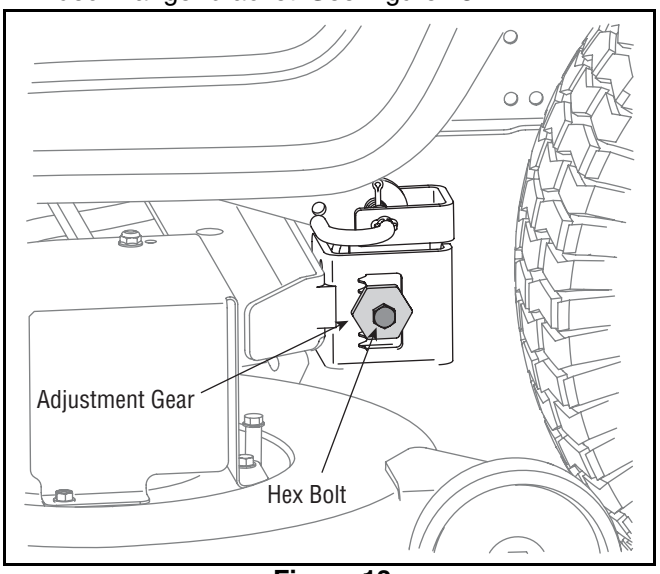

Figure 13

4. Balance the deck by using a wrench to turn the adjustment gear (See Figure 13) up or down.
5. The deck is properly balanced when both blade tip measurements taken earlier are equal.
6. Retighten the hex bolt on the left deck hanger bracket when proper adjustment is achieved.

Steering Adjustment

If the tractor turns tighter in one direction than the other, or if the ball joints are being replaced due to damage or wear, the steering drag links may need to be adjusted.

Adjust the drag links so that equal lengths are threaded into the ball joint on the left side and the ball joint on the right side:

1. Loosen the jam nut found on the drag link at the rear of the ball joint. See Figure 14.

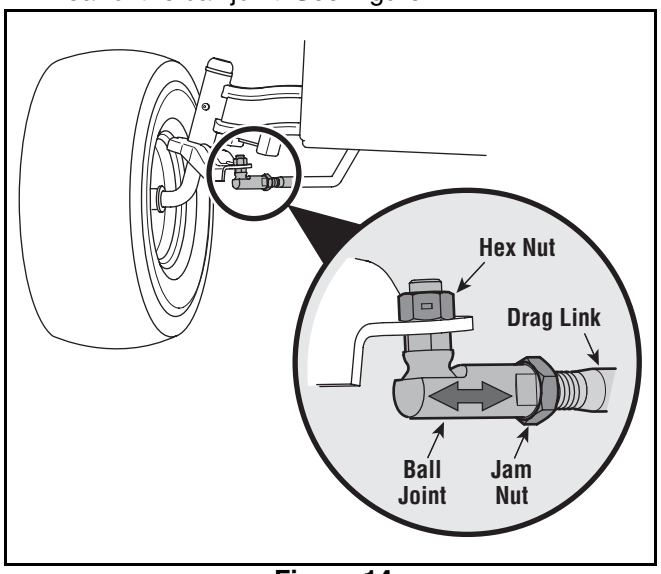

Figure 14

2. Remove the hex nut on the top of ball joint. See Figure 14.
3. Thread the ball joint toward the jam nut to shorten the drag link. Thread the ball joint away from the jam nut to lengthen the drag link.
4. Replace hex nut and retighten the jam nut after proper adjustment is achieved.

NOTE: *Threading the ball joints too far onto the drag links will cause the front tires to "toe-in" too far. Proper toe-in is between 1/16" and 5/16".*

Front tire toe-in can be measured as follows:

1. Place the steering wheel in position for straight ahead travel.
2. In front of the axle, measure the distance horizontally from the inside of the left rim to the inside of the right rim. Note the distance.
3. Behind the axle, measure the distance horizontally from the inside of the left rim to the inside of the right rim. Note the distance.
4. The measurement taken in front of the axle should be between 1/16" and 5/16" less than the measurement taken behind the axle.
5. Adjust if necessary.

SECTION 8: MAINTAINING YOUR LAWN TRACTOR

NOTE: *Refer to* **Maintenance Chart** *on page 30 for a reference of recommended maintenance intervals.*

WARNING: Before performing any maintenance or repairs, disengage PTO, set parking brake, stop engine and remove key to prevent unintended starting.

Engine

Maintenance, repair, or replacement of the emission control devices and systems, which are being done at the customer's expense, may be performed by any engine repair establishment or individual. **Warranty repairs must be performed by an authorized Toro service dealer.**

Engine Oil Recommendations

Using the proper type and weight of engine oil is extremely important, as is checking and changing oil regularly. Failure to use the correct oil, or operating the engine with dirty oil will result in premature engine wear and failure.

Engine Oil Type



Use only a high quality detergent oil of **API (**American Petroleum Institute) service class SG, SH, SJ or higher. Selection of engine oil should be based on the lowest anticipated temperatures prior to the next scheduled oil change. Refer to the Temperature / Oil Viscosity Chart.

Checking the Oil Level

It is important to check the oil level at least every four hours of operation. Regular checking during the first 24 hours of operation is especially important. Check the oil level **before each use** as follows:

1. Allow the engine a few minutes to rest after operation. This will give the oil time to drain into the crankcase sump and result in a more accurate dipstick reading.
2. Clean the area around the oil fill cap/dipstick to prevent debris from entering the crankcase. Refer to Figure 14.
3. Remove the oil fill cap/dipstick by lifting it out of the oil fill tube.
4. Wipe the dipstick clean before pushing it all the way back into the oil fill tube. Withdraw the dipstick to check the oil level. Refer to figure at right.
5. Always keep the oil level at or near the **F** mark on the dipstick. If the oil is low, add oil of the proper type up to the **F** mark. Always re-check the oil level with the dipstick before adding more oil.

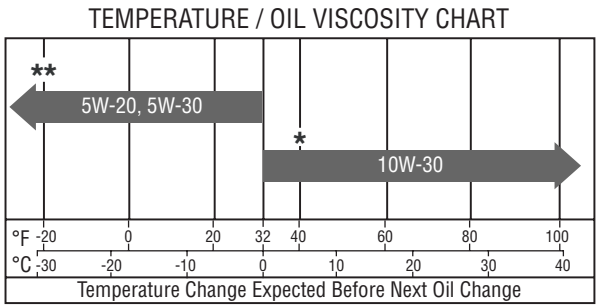

*Use of synthetic oil having 5W-20 or 5W-30 rating is acceptable, up to 4°C (40°F).

**Synthetic oils will provide better starting in extreme cold below 23°C (-10°F).

IMPORTANT: Never operate the engine with the oil level below the **L** mark or above the **F** mark on the dipstick.

6. After checking the oil level (and adding oil, if necessary), reinstall the oil fill cap/dipstick by inserting it into the oil fill tube

Adding Oil

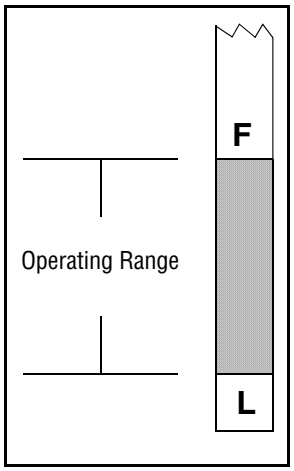

If, after checking the oil level, you find the dipstick reads **L**, proceed as follows.

- Place the tractor on a level surface and engage the parking brake. Stop the tractor engine and remove the ignition key.
- Clean the area around the oil fill cap and fill tube to prevent debris from entering the crankcase.
- Remove the oil fill cap/dipstick from the oil fill tube and SLOWLY pour oil into the oil fill tube. Do NOT pour more than 6 oz. of oil at a time without first stopping and re-checking the oil level.
- Fill the crankcase until the oil level reaches the full (**F**) mark on the dipstick. See Figure above. Refer to the oil viscosity chart earlier in this section for information regarding the proper type of oil to add to the crankcase.

IMPORTANT: The engine (with oil filter) has a capacity of 50.75 oz. (1.5 liters). Never overfill the engine crankcase.

IMPORTANT: The engine may overheat and/or damage may result if the oil level is below the **L** or over the **F** on the dipstick.

- Reinstall the oil fill cap/dipstick securely onto the oil fill tube.

IMPORTANT: The oil fill cap/dipstick **must be installed securely onto the tube at all times when the engine is operating**. Severe engine damage could result from failure to do so.

Changing the Engine Oil

The engine oil and oil filter should be changed after every 50 hours of operation.

WARNING: If the engine has been recently run, the engine, muffler and surrounding metal surfaces will be hot and can cause burns to the skin. Allow the tractor to cool and use caution when removing

IMPORTANT: The oil filter should be changed at every oil change interval.

To complete an oil change, proceed as follows:

Draining the Oil

Run the engine for a few minutes to allow the oil in the crankcase to warm up. Warm oil will flow more freely and carry away more of the engine sediment which may have settled at the bottom of the crankcase. Use care to avoid burns from hot oil.

1. Pop open the protective cap on the end of the oil drain valve to expose the drain port. See Figure 15
2. Remove the oil fill cap/ dipstick from the oil fill tube.
3. Push the oil drain hose (packed with this manual) onto the oil drain port. Route the opposite end of the hose into an appropriate oil collection container with a capacity great enough to collect the used oil (the engine, with oil filter, has a capacity of 50.75 oz. / 1.5 liters).
4. Push the oil drain valve in slightly, then rotate counterclockwise and pull outward to begin draining oil.
5. After the oil has finished draining, push the oil drain valve back in, rotate it clockwise to lock the valve closed and re-cap the end of the oil drain valve to keep debris from entering the drain port.

IMPORTANT: Always change the oil filter when performing an oil change on your tractor's engine.

Changing the Oil Filter

After draining the oil, proceed as follows:

1. Before removing the old oil filter, clean around its base to prevent debris from entering the crankcase.
2. Grasp the oil filter and remove it from the filter adapter by turning it counterclockwise.
3. Place a new replacement filter in a shallow pan with the open end up and pour new oil of the proper type (refer to the chart on page 21), in through the threaded center hole.

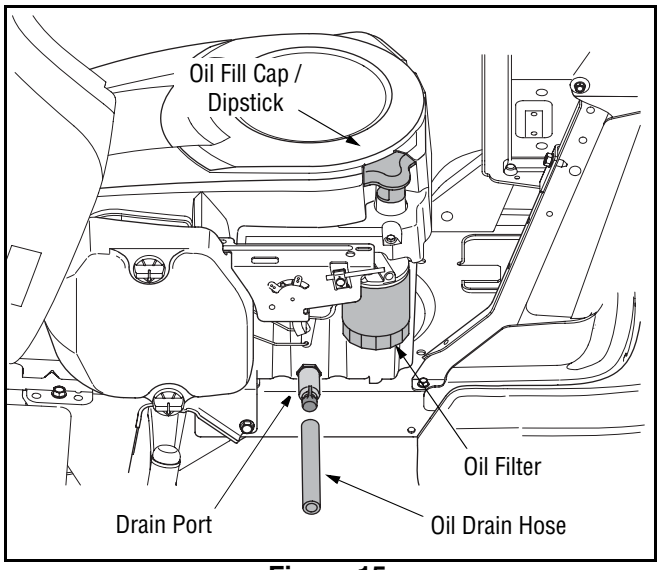

Figure 15

IMPORTANT: Stop pouring when the oil reaches the bottom of the threads and allow a minute or two for the oil to be absorbed by the filter material.

4. Put a drop of oil on your fingertip and apply a light coating to the gasket of the new oil filter.
5. Install the replacement oil filter on the engine by turning it clockwise onto the filter adapter until the rubber gasket makes contact with the base. Tighten the filter an additional **1/2 turn** after the gasket first makes contact**.**

Re-filling the Crankcase with Oil

IMPORTANT: Always check the level on the dipstick as instructed on page 21 before adding more oil. Do NOT overfill.

NOTE: *For the proper oil type, refer to the chart on page 21 of this manual.*

1. Clean the area around the oil fill tube to prevent debris from entering the crankcase.
2. **Slowly** pour oil into the fill tube. Fill the crankcase until the oil level reaches the full (**F**) mark on the dipstick (Refer to Page 21).
3. Reinstall the oil fill cap/dipstick securely into the oil fill tube.

IMPORTANT: The oil fill cap/dipstick **must be installed securely onto the tube at all times when the engine is operating**. Severe engine damage could result from a failure to do so.

4. Start the tractor engine and allow it to run for thirty seconds, then stop the engine and remove the ignition key.
5. Check the oil level and add oil if necessary. **Do not overfill the engine crankcase**.
6. Examine the area around the base of the oil fill tube, the oil filter adapter, and the oil drain valve for leaks before operating the tractor.

IMPORTANT: If leaks are present, have your engine serviced by an authorized Toro service dealer before operating the tractor.

Air Filter

The engine is equipped with a replaceable, high density paper air cleaner element. Always examine the air cleaner **before starting the engine.** Check for a buildup of dirt and debris around the air cleaner system. Keep this area clean. Also check for loose or damaged components. Replace all bent or damaged air cleaner components.

NOTE: *Starting the tractor with loose or damaged air cleaner components could allow unfiltered air into the engine causing premature wear and failure.*

Service Paper Element

The paper element should be replaced at least once a season, or every **100 hours** of operation. Replace more frequently if the tractor is operated under extremely dusty conditions. To replace the paper element, proceed as follows:

1. Loosen the air cleaner cover knob and remove the cover. See Figure 16.

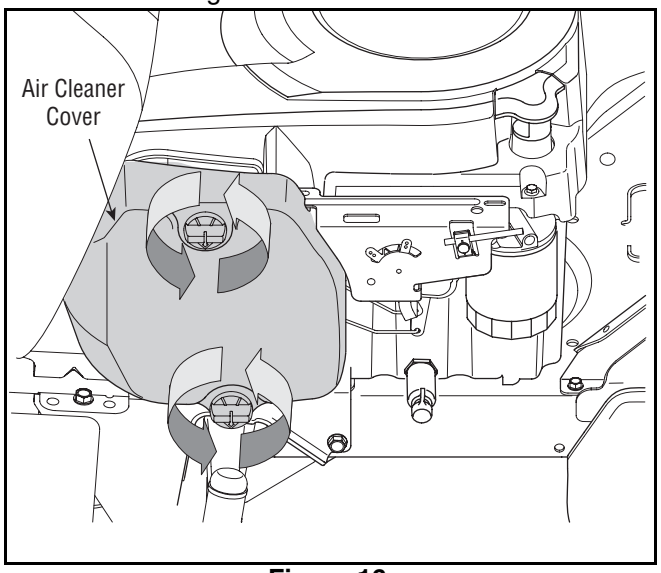

Figure 16

2. Remove the air cleaner element.
3. Remove the precleaner from the element and service as instructed earlier in this section.

IMPORTANT: Do **not** wash the paper element or use pressurized air**,** as this will damage the element.

Examine the element and discard if dirt and/or damage is present.

NOTE: *Handle new element carefully; do not use if the sealing surfaces are bent or damaged.*

4. If any loose dirt or debris fell on the air cleaner base when the element was removed, carefully remove it and wipe the base clean. Be careful that none of it drops into the intake.
5. Check the air cleaner base. Make sure it is secured and not damaged. Also check the air cleaner cover for damage or improper fit. Replace all damaged air cleaner components.
6. Install the precleaner over the new paper element and reinstall the element.
7. Reinstall the cover and tighten the knobs securely.

Spark Plug

Every two years or **200 hours** of operation, remove the spark plug, check its condition, and reset the gap or replace with a new plug as necessary. Spark plug replacement is recommended at **500 hours**.

1. Lift the tractor's hood by pivoting it forward.

NOTE: *Removing the tractor's hood may ease the following steps, but is not necessary.*

2. Remove the upper hex screws that secure the heat shield in place, on both the left side and right side of the tractor. See Figure 17.

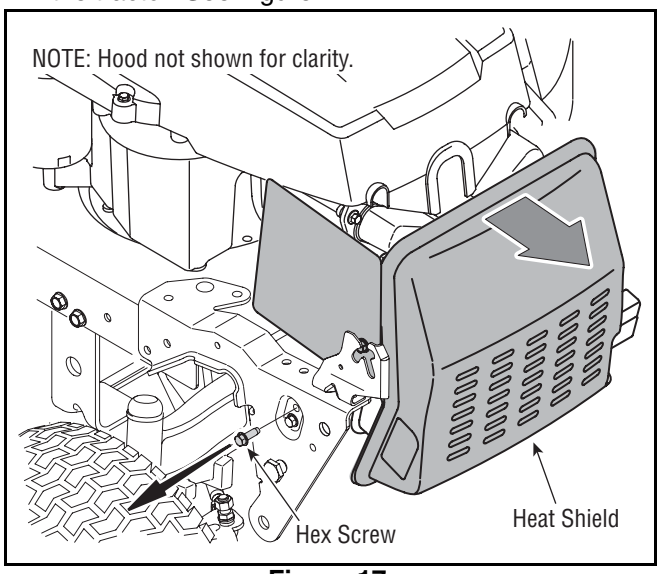

Figure 17

3. Pivot the heat shield forward.
4. Carefully pull the spark plug wire boot off of the spark plug.
5. Before removing the spark plug, clean the area around the base of the plug to keep dirt and debris out of the engine.
6. Using a ratchet with a 5/8-inch spark plug socket, remove the spark plug and check its condition.
7. Replace the plug if worn, dirty or damaged. Reuse only after resetting the gap as instructed.

NOTE: *Do not clean the spark plug using an abrasive grit. Some grit could remain in the spark plug and enter the engine causing extensive wear and damage.*

8. Check the gap using a feeler gauge and adjust, if necessary, by carefully bending the ground electrode. See Figure 18. Set the spark plug gap to 0.030 in (0.76 mm).

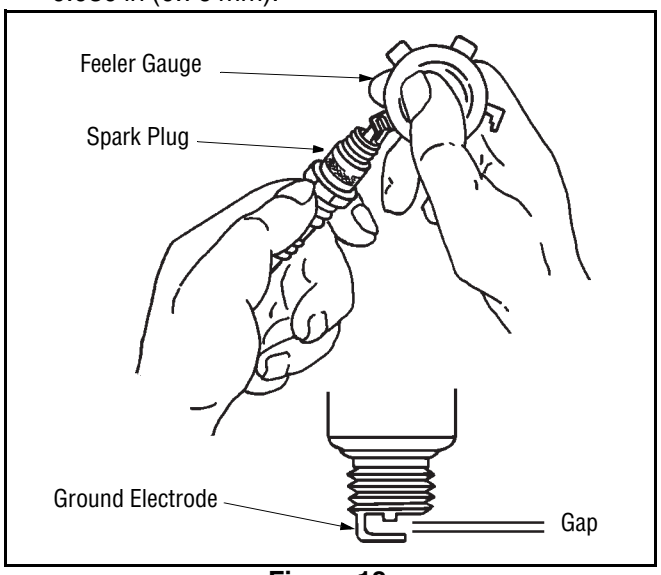

Figure 18

9. Reinstall the spark plug into the cylinder head. Torque the spark plug to **28/32 ft. lb.** (**38.0/43.4 N·m**).
10. Place the spark plug wire boot over the spark plug and press until you feel it “click” in place.

Fuel Filter

WARNING: Do not replace the fuel filter when the engine is hot.

The engine is equipped with an inline fuel filter located on the right side of the engine.

Visually inspect the filter periodically for a build-up of residue inside the filter body, and for a dirty element which can be indicated by discoloration. Replace the fuel filter when dirty.

Cleaning the Engine And Deck

Any fuel or oil spilled on the machine should be wiped off promptly.
Do NOT allow debris to accumulate around the cooling fins of the engine or on any other part of the machine, especially the belts and pulleys.

Desk Wash System

Your tractor’s deck is equipped with a water port on its surface as part of its deck wash system.
Use the deck wash system to rinse grass clippings from the deck’s underside and prevent the buildup of corrosive chemicals. Complete the following steps AFTER EACH MOWING:

1. Drive the tractor to a level, clear spot on your lawn, near enough for your garden hose to reach.

IMPORTANT: Make certain the tractor’s discharge chute is directed AWAY from your house, garage, parked cars, etc.

2. Disengage the PTO (Blade Engage), set the parking brake and stop the engine.
3. Thread the hose coupler (packaged with your tractor’s Operator’s Manual) onto the end of your garden hose.
4. Attach the hose coupler to the water port on your decks surface. See Figure 19.

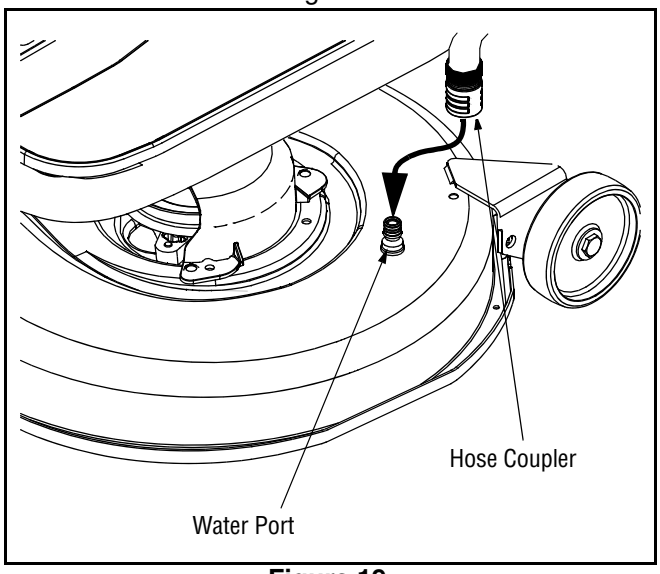

Figure 19

5. Turn the water on.
6. While sitting in the operator’s position on the tractor, start the engine and place the throttle lever in the FAST (rabbit) position.
7. Move the tractor’s PTO (Blade Engage) into the ON position.
8. **Remain in the operator’s position** with the cutting deck engaged for a minimum of two minutes, allowing the underside of the cutting deck to thoroughly rinse.
9. Move the tractor’s PTO (Blade Engage) into the OFF position.
10. Turn the ignition key to the STOP position to turn the tractor’s engine off.
11. Turn the water off and detach the hose coupler from the water port on your deck’s surface..

Lubrication

WARNING: Before lubricating, repairing, or inspecting, always disengage PTO, set parking brake, stop engine and remove key to prevent unintended starting.

Engine

Refer to **Engine** on page 21 for instruction regarding all engine-related lubrication.

Front Wheels

Each of the front wheel axles and rims is equipped with a grease fitting. See . Lubricate with 251H EP grease or an equivalent No. 2 multi-purpose lithium grease after every 25 hours of tractor operation.

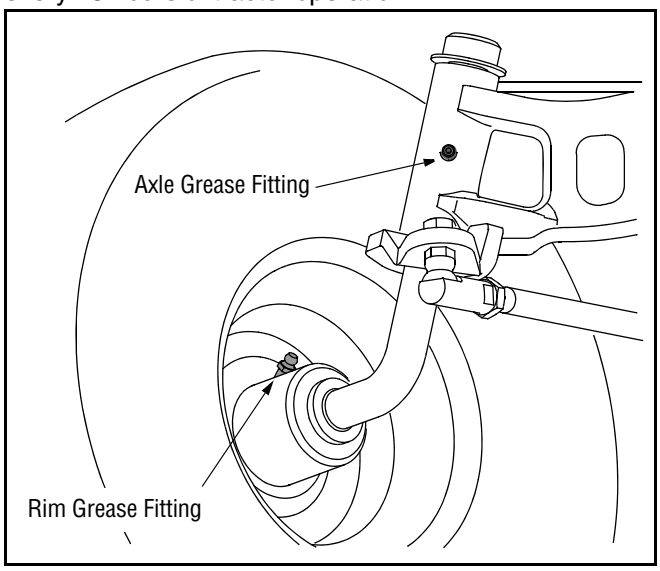

Figure 20

Pivot Points & Linkage

Lubricate all the pivot points on the drive system, parking brake and lift linkage at least once a season with light oil.

SECTION 9: SERVICE

Tires

WARNING: Never exceed the maximum inflation pressure shown on the sidewall of the tire.

The recommended operating tire pressure is approximately 10 psi for the rear tires and 14 psi for the front tires. Do not overinflate. Uneven tire pressure could cause the cutting deck to mow unevenly.

Fuse

A 20 amp fuse is installed in your tractor's wiring harness to protect the tractor's electrical system from damage caused by excessive amperage.

If the electrical system does not function, or your tractor's engine will not crank, first check to be certain that the fuse has not blown. It can be found beneath the seat, mounted to the inside of the frame, near the battery tray.

IMPORTANT: Always use a 20 amp fuse for replacement.

WARNING: Before servicing, repairing, or inspecting, always disengage PTO, set parking brake, stop engine and remove key to prevent unintended starting.

Cutting Blades

WARNING: Be sure to shut the engine off, and remove the ignition key to prevent unintended starting before removing the cutting blade(s) for sharpening or replacement. Protect your hands by using heavy gloves when grasping the blade.

WARNING: Periodically inspect the blade adapter and/or spindle for cracks or damage, especially if you strike a foreign object. Replace immediately if damaged.

The blades may be removed as follows.

- Remove the deck from beneath the tractor, (refer to **Cutting Deck Removal** on page 27) then carefully flip the deck over to expose its underside.
- Place a block of wood between the center deck housing baffle and the cutting blade to act as a stabilizer. See Figure 21.
- Remove the hex flange nut that secures the blade to the spindle assembly. See Figure 21.

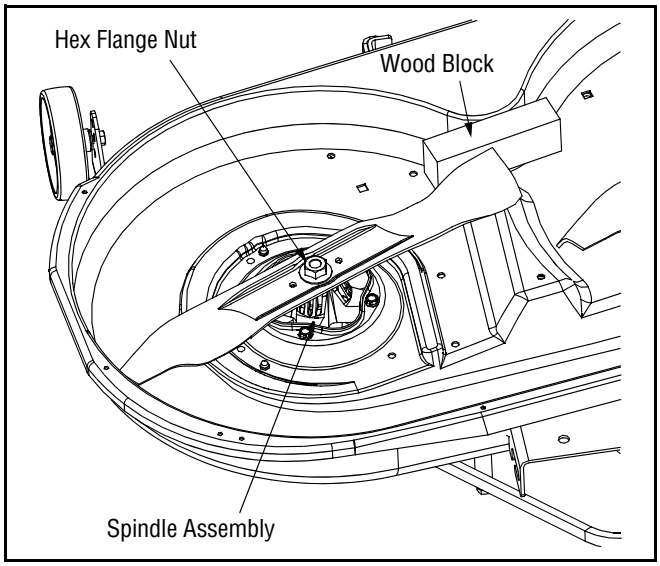

Figure 21

- To properly sharpen the cutting blades, remove equal amounts of metal from both ends of the blades along the cutting edges, parallel to the trailing edge, at a 25° to 30° angle.

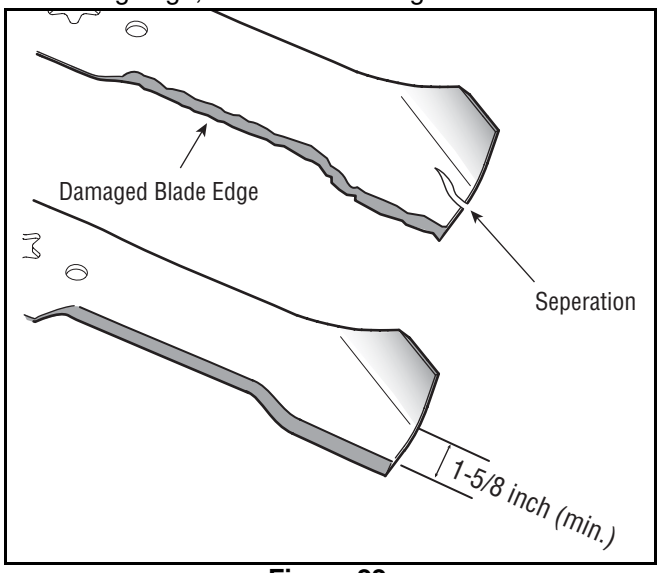

Figure 22

IMPORTANT: If the cutting edge of the blade has already been sharpened, or if any metal separation is present, replace the blades with new ones.

It is important that each cutting blade edge be ground equally to maintain proper blade balance. A poorly balanced blade will cause excessive vibration and may cause damage to the tractor and result in personal injury.

IMPORTANT: When replacing the blade, be sure to install the blade with the side of the blade marked ‘‘Bottom’’ (or with a part number stamped in it) facing the ground when the mower is in the operating position.

IMPORTANT: Use a torque wrench to tighten the blade spindle hex flange nut to between 70 ft-lb (95 N·m) and 90 ft-lb (122 N·m).

Battery

California Proposition 65 Warning: Battery posts, terminals, and related accessories contain lead and lead compounds, chemicals known to the State of California to cause cancer and reproductive harm. *Wash hands after handling.*

The battery is sealed and is maintenance-free. Acid levels cannot be checked and fluid can not be added.

- Always keep the battery cables and terminals clean and free of corrosive build-up.
- After cleaning the battery and terminals, apply a light coat of petroleum jelly or grease to both terminals
- Always keep the rubber boot positioned over the positive terminal to prevent shorting.

IMPORTANT: If removing the battery, disconnect the NEGATIVE (Black) wire from its terminal first, followed by the POSITIVE (Red) wire. When re-installing the battery, always connect the POSITIVE (Red) wire to the POSITIVE (+) terminal before connecting the NEGATIVE (Black) wire to the NEGATIVE (-) terminal. Be certain that the wires are connected to the correct terminals; reversing them could change the polarity and cause damage to your engine’s alternator.

Jump Starting

WARNING: Never jump start a damaged or frozen battery (a battery can be identified as frozen if its sides are bulged out, it’s frosty and it feels very solid). Be certain the vehicles do not touch, and ignitions are off. Do not allow cable clamps to touch.

1. Connect positive (+) cable to positive post (+) of your tractor’s discharged battery.
2. Connect the other end of the (+) cable to the positive (+) post of the jumper battery.
3. Connect the second negative (–) cable to the negative (–) post of the jumper battery.
4. Make the final connection on the engine block of the stalled tractor, away from the battery. Attach to a unpainted part to assure a good connection.

IMPORTANT: If the jumper battery is installed on a vehicle (i.e. car, truck), do NOT start the vehicle’s engine when jump starting your tractor.

5. Start the tractor (as instructed on page 17).
6. Set the tractor’s parking brake before removing the jumper cables, in reverse order of connection.
7. Allow the tractor’s engine to run for 15 minutes before shutting it off to allow the alternator time to charge the discharged battery.

Charging

WARNING: Batteries give off an explosive gas while charging. Charge the battery in a well ventilated area and keep away from an open flame or pilot light as on a water heater, space heater, furnace, clothes dryer or other gas appliances.

IMPORTANT: When charging your tractor’s battery, use only a charger designed for 12V lead-acid batteries. Read your battery charger’s Owner’s Manual prior to charging your tractor’s battery. Always follow its instructions and heed its warnings.

If your tractor has not been put into use for an extended period of time, charge the battery as follows:

1. Set your battery charger to deliver a maximum of 10 amperes.
2. If your battery charger is automatic, charge the battery until the charger indicates that charging is complete. If the charger is not automatic, charge for no fewer than eight hours.

Cutting Deck Removal

To remove the cutting deck, proceed as follows:

1. Place the PTO/Blade Engage lever in the disengaged (OFF) position and engage the parking brake.
2. Lower the deck by moving the deck lift lever into the bottom notch on the right fender.
3. Remove the hairpin clip that secures the PTO cable to the rear of the cutting deck. See Figure 23.

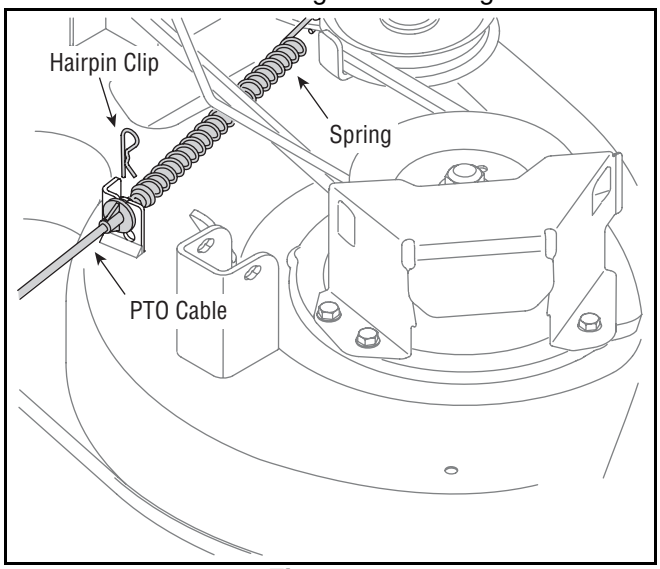

Figure 23

4. Remove the PTO cable and accompanying spring from the cutting deck.
5. Remove the deck belt from around the tractor's engine pulley.
6. Looking at the cutting deck from the left side of the tractor, locate the deck support pin on the rear left side of the deck.
7. Pull the deck support pin outward to release the deck from the deck lift arm. See Figure 24.

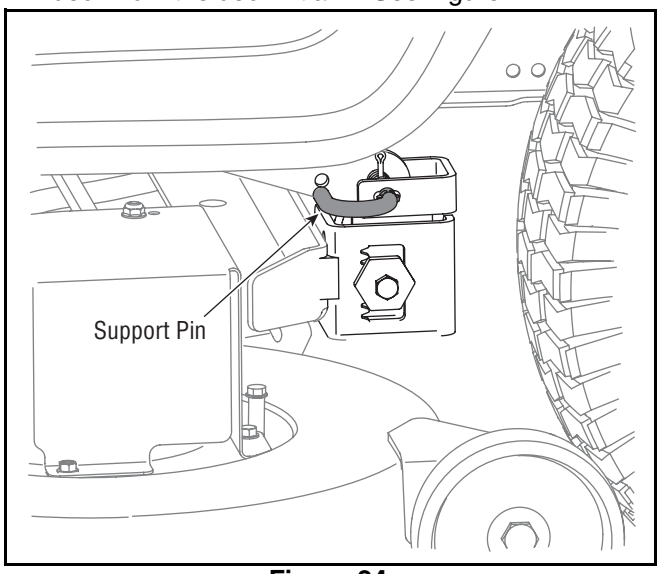

Figure 24

8. Repeat the above steps on the tractor's right side.
9. Move the deck lift lever into the top notch to raise the deck lift arms up and out of the way.
10. Gently slide the cutting deck toward the front of the tractor allowing the hooks on the deck to release themselves from the deck stabilizer rod.
11. Gently slide the cutting deck (from the right side) out from underneath the tractor.

Changing the Deck Belt

WARNING: Be sure to shut the engine off, engage the parking brake and remove the ignition key to prevent unintended starting before removing the belt.

WARNING: Avoid the possibility of a pinching injury. Do not place your fingers on the idler spring or between the belt and a pulley while removing the belt.

All belts on your tractor are subject to wear and should be replaced if any signs of wear are present.

IMPORTANT: The V-belts found on your tractor are specially designed to engage and disengage safely. A substitute (non-OEM) V-belt can be dangerous by not disengaging completely. For a proper working machine, use factory approved belts.

To change or replace the deck belt on your tractor, proceed as follows:

1. Remove the cutting deck.
2. Remove the belt covers by removing the screws that fasten them to the deck. Refer to the figure below.
3. Loosen, but do not remove the deck idler pulleys.
4. Remove the deck belt from around all pulleys, including the deck idler pulleys.
5. Route the new belt as shown in the figure below and retighten the deck idler pulleys.
6. Reinstall the belt guards removed earlier and remount the deck to the tractor.

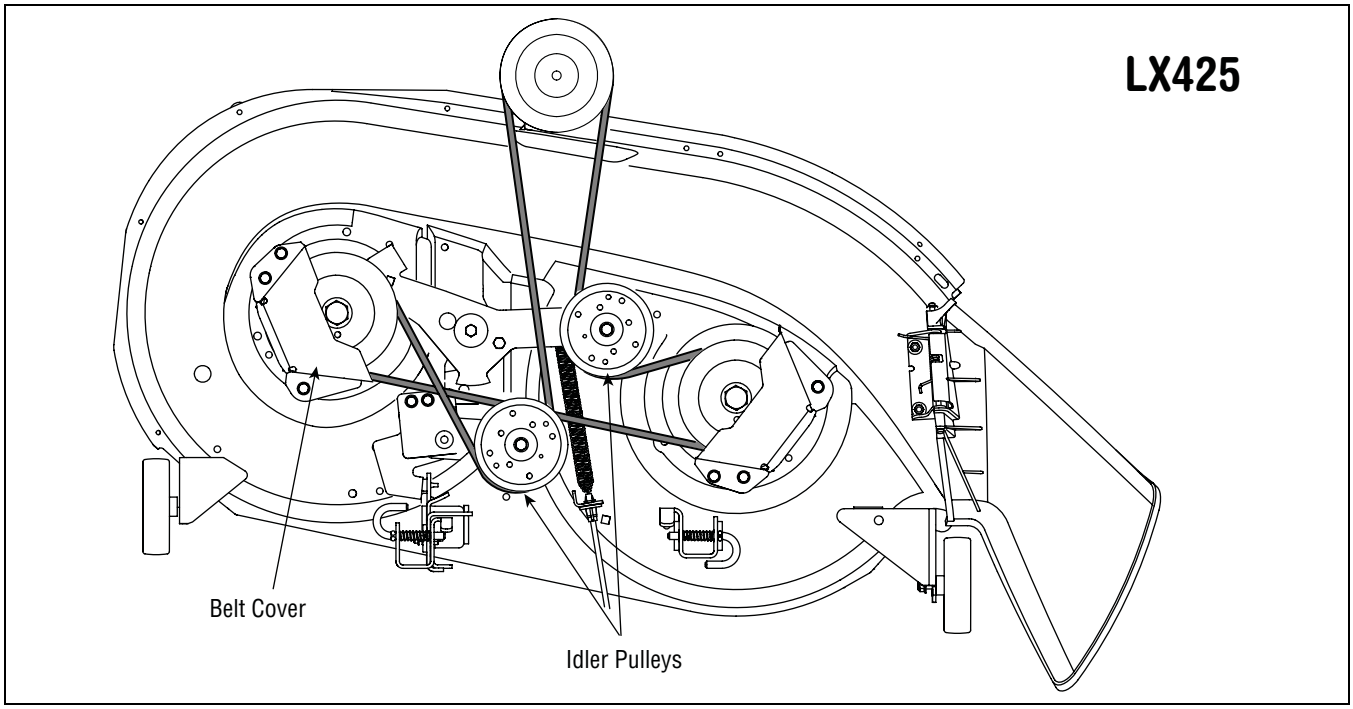

SECTION 10: OFF-SEASON STORAGE

Clean and lubricate the tractor as instructed in **Section 7: MAINTAINING YOUR LAWN TRACTOR** on page 21 of this manual before storing for an extended period.

Engine

If the engine will be out of service for two months or more, use the following storage procedure:

1. Clean the exterior surfaces of the engine.
2. Change the oil and filter while the engine is still warm from operation. Refer to **Changing Engine Oil** on page 22.
3. The fuel system must be completely emptied, or the gasoline must be treated with a fuel stabilizer such as *STA-BIL®* to prevent deterioration. If you choose to use a stabilizer, follow the manufacturers recommendations, and add the correct amount for the capacity of the fuel system. Fill the fuel tank with clean, fresh gasoline. Run the engine for 2-3 minutes to get stabilized fuel into the carburetor. To empty the system, run the engine until the tank and system are empty.



WARNING: Drain fuel only into an approved container outdoors, away from an open flame. Allow engine to cool. Extinguish cigarettes, cigars, pipes, and other sources of ignition prior to draining fuel.

1. Remove the spark plug. Add one tablespoon of engine oil into the spark plug hole. Install the plug, but do not reconnect the plug wire. Crank the engine two or three revolutions.
2. Store the engine in a clean, dry place.



WARNING: Never store the machine or fuel container indoors where there is an open flame, spark or pilot light such as on water heater, furnace, clothes dryer or other gas appliance.

SECTION 11: MAINTENANCE CHART

	Before Each Use	Every 10 Hours	Every 25 Hours	Every 50 Hours	Every 200 Hours	Every Season	Prior to Storing
Check Safety Interlock System	✓						
Clean Hood/Dash Louvers		✓					✓
Check Engine Oil Level	✓						
Replace Air Filter Element						✓	
Change Engine Oil & Filter				✓		✓	
Clean Battery Terminals		✓					✓
Lube Front Axles and Rims			✓				✓
Clean Engine Cooling Fins			✓				✓
Lube Pedal Pivot Points		✓					✓
Check Spark Plug					✓		✓
Service Air Filter Element			✓				

SECTION 12: TROUBLESHOOTING

Trouble	Possible Cause(s)	Corrective Action
Engine fails to start	PTO (Blade Engage) lever engaged. Parking brake not engaged. Spark plug wire disconnected. Throttle/choke control not in correct starting position. Choke not activated Fuel tank empty, or stale fuel. Blocked fuel line. Faulty spark plug. Engine flooded.	Place PTO (Blade Engage) lever in (OFF) position. Engage parking brake. Connect wire to spark plug. Move Throttle/Choke Control into CHOKE position. Move Throttle/Choke Control into CHOKE position. Fill tank with clean, fresh (less than 30 days old) gas. Clean fuel line or replace fuel filter. Clean, adjust gap or replace plug. Crank engine with throttle in FAST position.
Engine runs erratic	Unit running with CHOKE activated. Spark plug wire(s) loose. Blocked fuel line or stale fuel. Vent in gas cap plugged. Water or dirt in fuel system. Dirty air cleaner.	Move Throttle/Choke Control out of CHOKE position. Connect and tighten spark plug wire(s). Clean fuel line; fill tank with clean, fresh (less than 30 days old) gasoline. Replace fuel filter, if so equipped. Clear vent or replace cap if damaged. Drain fuel tank. Refill with clean, fresh (less than 30 days old) gasoline. Replace air cleaner paper element or clean foam precleaner.
Engine overheats	Engine oil level low. Air flow restricted.	Fill crankcase with proper capacity and weight of oil. Clean grass clippings and debris from around the engine's cooling fins and blower housing.
Engine hesitates at high RPM	Spark plug gap too close.	Remove spark plug and reset the gap.
Idles poorly	Spark plug fouled, faulty or gap too wide. Dirty air cleaner.	Replace spark plug. Set plug gap. Replace air cleaner element or clean pre-cleaner.
Excessive vibration	Cutting blade loose or unbalanced. Damaged or bent cutting blade.	Tighten blade and spindle. Balance blade. Replace blade.
Mower will not mulch grass	Engine speed too low. Wet grass. Excessively high grass. Dull blade.	Place throttle in FAST (rabbit) position. Do not mow when grass is wet; wait until later to cut. Mow once at a high cutting height, then mow again at desired height or make a narrower cutting swath. Sharpen or replace blade.
Uneven cut	Deck not balanced properly. Dull blade. Uneven tire pressure.	Perform side-to-side deck adjustment. Sharpen or replace blade. Check tire pressure in all four tires.

SECTION 13: SPECIFICATIONS*

	LX425
Capacities	
Fuel Tank	3.0 gal. (11.4 liters)
Engine Crankcase (w/ filter)	50.75 oz. (1.5 liters)
Variable Speed Transmission	
Forward Speed	0 - 5.2 mph (8.2 km/h)
Reverse Speed	0 - 2.3 mph (3.7 km/h)
Engine (Air-cooled, 4-cycle)	
Make	*Kohler Courage*
Model	SV600
Cylinders	Single
Bore	3.70 in. (94 mm)
Stroke	3.38 in. (86 mm)
Displacement	36.4 cubic in. (597 cc)
Power @3600 RPM	20 HP (14.9 kW)**
Maximum Torque	36.9 ft. lb. (50.0 Nm) @ 2200 RPM
Compression Ratio	8.5:1
Engine Speed (governed)	3375 RPM
Low Speed	2150 RPM (± 75 RPM)
Spark Plug Gap	.030 in. (.76 mm)
Electrical System	
System Voltage	12-volt Negative Ground
Battery	190 CCA (sealed)
Alternator	15 Amp Regulated
Fuse (automotive type)	20 Amp
Headlights	Incandescent
Brakes	Single Disc (Dry)
Turf Tires	
Front (inches)	15 x 6 x 6
Rear (inches)	20 x 8 x 8
Dimensions	
Cutting Width, Deck	42 in. (106.7 cm)
Wheelbase	46 in. (116.8 cm)
Length, over all	68 in. (172.7 cm)
Width, over all	45 in. (114.3 cm)
Height, over all	43 in. (109.2 cm)
Ground Clearance	4.5 in. (11.4 cm)
Turning Radius	18 in. (46 cm)
Weight (approximate)	498 lb. (225.9 kg)

* *Toro* reserves the right to change product specifications, design, and standard equipment without notice and without incurring obligation

** *Kohler's* horsepower ratings exceed Society of Automotive Engineers Small Engine Test Code J1940. Actual engine horsepower is lower and affected by, but not limited to, accessories (air cleaner, exhaust, charging, cooling, fuel pump, etc.), application, engine speed and ambient operating conditions (temperature, humidity, and altitude).

ELECTRIC SCHEMATIC

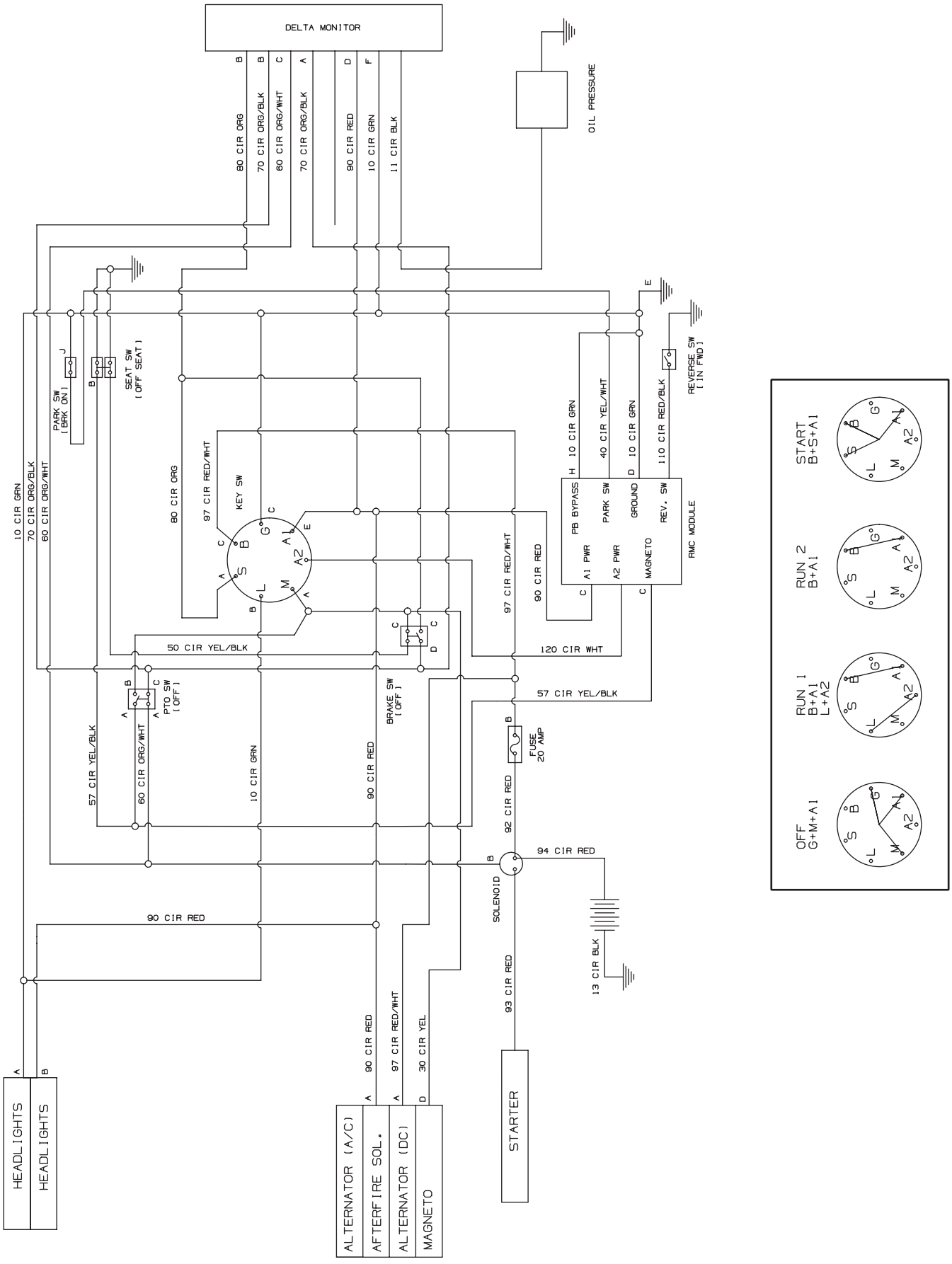

CALIFORNIA EMISSION CONTROL WARRANTY STATEMENT
YOUR WARRANTY RIGHTS AND OBLIGATIONS

The California Air Resources Board and MTD Consumer Group Inc are pleased to explain the evaporative emission control system warranty on your 2007 lawn mower. In California, new lawn mower must be designed, built and equipped to meet the State's stringent anti-smog standards. MTD Consumer Group Inc must warrant the EECS on your lawn mower for the period of time listed below provided there has been no abuse, neglect or improper maintenance of your lawn mower.

Your EECS may include parts such as the carburetor, fuel-injection system, the ignition system, catalytic converter, fuel tanks, fuel lines, fuel caps, valves, canisters, filters, vapor hoses, clamps, connectors, and other associated emission-related components.

Where a warrantable condition exists, MTD Consumer Group Inc will repair your lawn mower at no cost to you including diagnosis, parts and labor.

MANUFACTURER'S WARRANTY COVERAGE:

This evaporative emission control system is warranted for two years. If any evaporative emission-related part on your equipment is defective, the part will be repaired or replaced by MTD Consumer Group Inc.

OWNER'S WARRANTY RESPONSIBILITIES:

As the lawn mower owner, you are responsible for performance of the required maintenance listed in your owner's manual. MTD Consumer Group Inc recommends that you retain all receipts covering maintenance on your lawn mower, but MTD Consumer Group Inc cannot deny warranty solely for the lack of receipts.

As the lawn mower owner, you should however be aware that MTD Consumer Group Inc may deny you warranty coverage if your lawn mower or a part has failed due to abuse, neglect, or improper maintenance or unapproved modifications.

You are responsible for presenting your lawn mower to MTD Consumer Group Inc's distribution center or service center as soon as the problem exists. The warranty repairs should be completed in a reasonable amount of time, not to exceed 30 days. If you have a question regarding your warranty coverage, you should contact the MTD Consumer Group Inc Service Department at 1-800-800-7310.

GENERAL EMISSIONS WARRANTY COVERAGE:

MTD Consumer Group Inc warrants to the ultimate purchaser and each subsequent purchaser that the lawn mower is: Designed, built and equipped so as to conform with all applicable regulations; and free from defects in materials and workmanship that cause the failure of a warranted part to be identical in all material respects to that part as described in MTD Consumer Group Inc's application for certification.

The warranty period begins on the date the lawn mower is delivered to an ultimate purchaser or first placed into service. The warranty period is two years.

Subject to certain conditions and exclusions as stated below, the warranty on emission-related parts is as follows:

1. Any warranted part that is not scheduled for replacement as required maintenance in the written instructions supplied, is warranted for the warranty period stated above. If the part fails during the period of warranty coverage, the part will be repaired or replaced by MTD Consumer Group Inc according to subsection (4) below. Any such part repaired or replaced under warranty will be warranted for the remainder of the period.
2. Any warranted part that is scheduled only for regular inspection in the written instructions supplied is warranted for the warranty period stated above. Any such part repaired or replaced under warranty will be warranted for the remaining warranty period.
3. Any warranted part that is scheduled for replacement as required maintenance in the written instructions supplied is warranted for the period of time before the first scheduled replacement date for that part. If the part fails before the first scheduled replacement, the part will be repaired or replaced by MTD Consumer Group Inc according to subsection (4) below. Any such part repaired or replaced under warranty will be warranted for the remainder of the period prior to the first scheduled replacement point for the part.
4. Repair or replacement of any warranted part under the warranty provisions herein must be performed at a warranty station at no charge to the owner.
5. Notwithstanding the provisions herein, warranty services or repairs will be provided at all of our distribution centers that are franchised to service the subject engines or equipment.
6. The lawn mower owner will not be charged for diagnostic labor that is directly associated with diagnosis of a defective, emission-related warranted part, provided that such diagnostic work is performed at a warranty station.
7. MTD Consumer Group Inc is liable for damages to other engine or equipment components proximately caused by a failure under warranty of any warranted part.
8. Throughout the lawn mower warranty period stated above, MTD Consumer Group Inc will maintain a supply of warranted parts sufficient to meet the expected demand for such parts.
9. Any replacement part may be used in the performance of any warranty maintenance or repairs and must be provided without charge to the owner. Such use will not reduce the warranty obligations of MTD Consumer Group Inc.
10. Add-on or modified parts that are not exempted by the Air Resources Board may not be used. The use of any non-exempted add-on or modified parts by the ultimate purchaser will be grounds for disallowing a warranty claims. MTD Consumer Group Inc will not be liable to warrant failures of warranted parts caused by the use of a non-exempted add-on or modified part.

WARRANTED PARTS:

The repair or replacement of any warranted part otherwise eligible for warranty coverage may be excluded from such warranty coverage if MTD Consumer Group Inc demonstrates that the lawn mower has been abused, neglected, or improperly maintained, and that such abuse, neglect, or improper maintenance was the direct cause of the need for repair or replacement of the part. That notwithstanding, any adjustment of a component that has a factory installed, and properly operating, adjustment limiting device is still eligible for warranty coverage. The following emission warranty parts list are covered: Fuel Line, Fuel Line Clamps

The Toro Company

MANUFACTURER'S LIMITED WARRANTY FOR LAWN & GARDEN TRACTORS

IMPORTANT: To obtain warranty coverage owner must present an original proof of purchase and applicable maintenance records to the servicing dealer. Please see the operator's manual for information on required maintenance and service intervals.

The limited warranty set forth below is given by **The Toro Company ("Toro") and The Toro Warranty Company,** pursuant to an agreement between them, with respect to new merchandise purchased or leased and used in the United States and/or its territories and possessions, and by Toro with respect to new merchandise purchased or leased and used in Canada and/or its territories and possession.

Toro warrants this product (excluding its *Normal Wear Parts* and *Batteries* as described below) against defects in material and workmanship for a period of two (2) years commencing on the date of original retail purchase or lease and will, at its option, repair or replace, free of charge, any part found to be defective in materials or workmanship.

Normal Wear Parts are warranted to be free from defects in material and workmanship for a period of thirty (30) days from the date of original purchase or lease. Normal wear parts include, but are not limited to items such as: belts, blades, blade adapters, grass bags, rider deck wheels, seats, and tires.

Batteries have a one-year prorated limited warranty against defects in material and workmanship, with 100% replacement during the first three months. After three months, the battery replacement credit is based on the months remaining in the twelve (12) month period dating back to the original date of original sale or lease. Any replacement battery will be warranted only for the remainder of the original warranty period.

This limited warranty shall only apply if this product has been operated and maintained in accordance with the Operator's Manual furnished with the product, and has not been subject to misuse, abuse, commercial use, neglect, accident, improper maintenance, alteration, vandalism, theft, fire, water, or damage because of other peril or natural disaster. Damage resulting from the installation or use of any part, accessory or attachment not approved by Toro for use with the product(s) covered by this manual will void your warranty as to any resulting damage. In addition, Toro may deny warranty coverage if the hour meter, or any part thereof, is altered, modified, disconnected or otherwise tampered with.

HOW TO OBTAIN SERVICE: Warranty service is available, WITH PROOF OF PURCHASE AND APPLICABLE MAINTAINCE RECORDS, through your local authorized service dealer. To locate the dealer in your area check your Yellow Pages, or contact;
Customer Care Department, Consumer Division
Toro Warranty Company
8111 Lyndale Avenue South
Bloomington, MN 55420,1196
In the US 1-888-384-9942 (**In Canada** 1-888-848-4073)
or log on to our Web site at www.toro.com.
Without limiting the foregoing, this limited warranty does not provide coverage in the following cases:

a. The engine or component parts thereof. These items may carry a separate manufacturer's warranty. Refer to applicable manufacturer's warranty for terms and conditions.
b. Routine maintenance items such as lubricants, filters, blade sharpening, tune-ups, brake adjustments, clutch adjustments, deck adjustments, and normal deterioration of the exterior finish due to use or exposure.
c. Service completed by someone other than an authorized service dealer.
d. Toro does not extend any warranty for products sold or exported outside of the United States and/or Canada, and their respective possessions and territories, except those sold through Toro's authorized channels of export distribution.
e. Replacement parts and\or accessories that are not genuine Toro parts.
f. Transportation charges and service calls.
g. Toro does not warrant this product for commercial use.

There are no implied warranties, including without limitation any implied warranty of merchantability or fitness for a particular purpose. No warranties shall apply after the applicable period of express written warranty above. No other express warranties beyond those mentioned above, given by any person or entity, including a dealer or retailer, with respect to any product, shall bind Toro. The exclusive remedy is repair or replacement of the product as set forth above. The terms of this warranty provide the sole and exclusive remedy arising from the sale and/or lease of the products covered hereby. Toro shall not be liable for any incidental or consequential loss or damage including, without limitation, expenses incurred for substitute or replacement lawn care services or for rental expenses to temporarily replace a warranted product.

Some jurisdictions do not allow the exclusion or limitation of incidental or consequential damages, or limitations on how long an implied warranty lasts, so the above exclusions or limitations may not apply to you.

In no event shall recovery of any kind be greater than the amount of the purchase price of the product sold. **Alteration of safety features of the product shall void this warranty.** You assume the risk and liability for loss, damage, or injury to you and your property and/or to others and their property arising out of the misuse or inability to use the product.

This limited warranty shall not extend to anyone other than the original purchaser or to the person for whom it was purchased as a gift.

HOW LOCAL LAWS RELATE TO THIS WARRANTY: This limited warranty gives you specific legal rights, and you may also have other rights that vary in different jurisdictions.

Customer Care Department of the Toro Warranty Company, 8111 Lyndale Ave. South, Bloomington, MN 55420-1196 or call (US) 1-888-384-9942, (Canada) 1-888-848-4073; www.toro.com