Form No. 3321–650 Rev. A

Recycler Kit

For 52” ProLine and Groundsmaster® Mowers

Model No. 59225

Installation Instructions

Loose Parts

Note: Use the chart below to identify parts used for assembly.

DESCRIPTION	QTY.	USE
Kicker	3	Install kickers
Bolt 5/16–18 x 1”	3	
Spacer	3	
Locknut 5/16-18	3	
Recycler® blade	3	Replace standard blades on mower
Baffle left side	1	Install Recycler® baffles
Baffle right side	1	
Bolt 5/16–18 x 5/8”	9	
Washer 5/16”	3	
Locknut 5/16-18	9	

Pre–Installation

1. Remove the mower from the traction unit. Refer to the Mower Operator Manual for instructions.
2. Thoroughly clean the mower. All debris must be removed to ensure the kickers and baffle will fit tightly against the mower deck.
3. Repair all bent or damaged areas of mower and replace any missing parts.

Install Kickers

1. Tip the mower upside down and block up the ends to ease the installation of the kickers.
2. On Groundsmaster mowers, use the dimensions shown in figure 1 to locate, mark and drill (3) .344” dia. holes thru the top of mower deck.

Note: Before drilling the holes, align the kickers with the hole marks to make sure they fit in the mower deck.

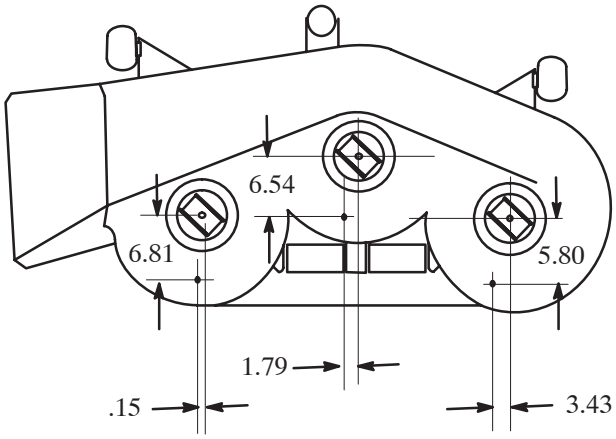

Figure 1

© 1998, 2007 by The Toro Company
8111 Lyndale Avenue South
Bloomington, MN 55420-1196

All Rights Reserved
Printed in the USA

3. Place the spacers and kickers inside the mower deck while aligning the mounting holes (Fig. 2).

4. Secure each kicker to mower deck with a 5/16–18 x 1" bolt and 5/16-18 locknut (Fig. 2). The bolt heads are to be positioned inside the mower deck.

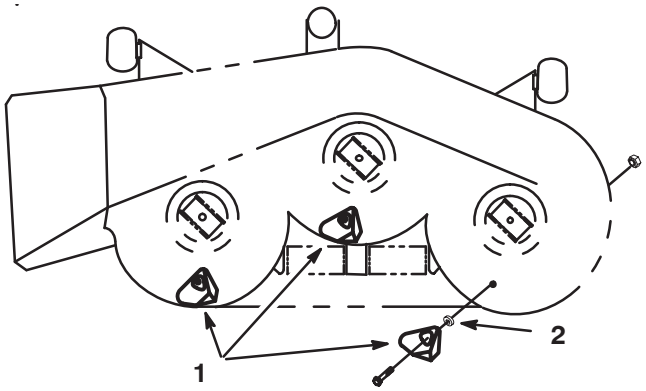

Figure 2

1. Kicker
2. Spacer

Installing the Recycler® Baffle

1. On Groundsmaster mowers, use the dimensions shown in figure 3 to locate, mark and drill (2) .344" dia. holes thru top of the mower deck.

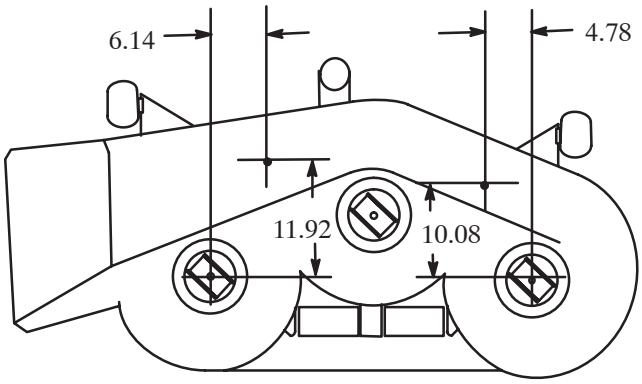

Figure 3

2. Place the left and right sides of the baffle into the mower deck.

3. Position the baffle sides together using the alignment pin on the flanges (Fig. 4).

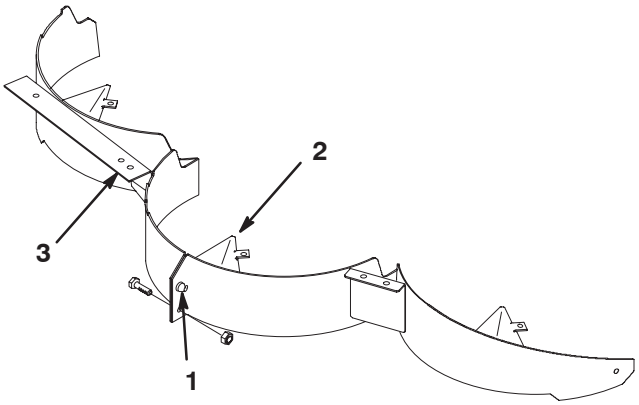

Figure 4

1. Alignment pin
2. Baffle kicker (3)
3. Use one of these holes as a template to locate hole in mower housing

4. Align two of the baffle holes with the holes previously drilled in the mower housing. Make sure there is clearance between the blades and the baffles.

5. Using the baffles as templates, mark the hole locations for the remainder of the holes in the mower housing (Fig. 4). Only drill one additional hole for mounting the right baffle flange (Fig. 4).

6. Remove the baffles from the mower housing and drill .344" dia. holes at the marked locations.

7. Secure the baffle flanges together with a 5/16-18 x 5/8" bolt and 5/16" locknut (Fig. 4).

8. Place baffle assembly inside cutting chamber and align the mounting holes (Fig. 5).

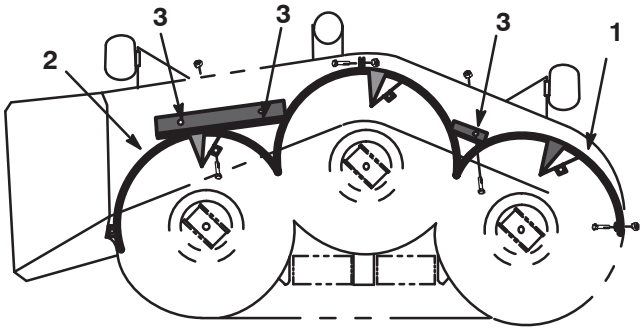

Figure 5

1. Baffle left side
2. Baffle right side
3. Use the washers at these locations

9. Loosely install the baffle flanges to the housing with (3) 5/16–18 x 5/8” bolts, washers and 5/16-18 locknuts (Fig. 5). The bolt heads are to be positioned inside the mower deck and the washers are to positioned next to the nuts.

10. Loosely install the rest of the baffle to the housing with (6) 5/16–18 x 5/8” bolts and 5/16-18 locknuts. The bolt heads are to be positioned inside the mower deck.

11. Tighten all mounting hardware securely.

Install Recycler® Blades

1. Remove standard blades and anti-scalp cups from spindles.

Note: Save blades and anti-scalp cups for use when side discharging.

2. Install Recycler® blades in kit. Secure washer and bolt previously removed (Fig. 6).

3. Rotate blades to assure there is at least 1/8” clearance between blades and baffle.

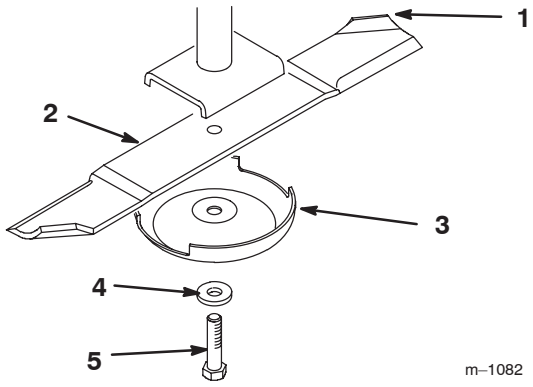

Figure 6

1. Sail Area of Blade
2. Recycler® blade
3. Anti-scalp cup
4. Washer
5. Blade Bolt

4. Install mower onto traction unit; refer to Installing the Mower, in Mower Operator’s Manual.

Removing the Recycler® Baffle

1. Thoroughly clean the mower.

2. Remove lock nuts from top and center of right side baffle (Fig. 7). Lower baffle and slide out of discharge opening to remove.

Note: Only the right side baffle need be removed for side discharge mowing.

3. Install previously removed 5/16–18 x 5/8” (16 mm) bolts and 5/16-18 locknuts in open holes of mower for safety (Fig. 7).

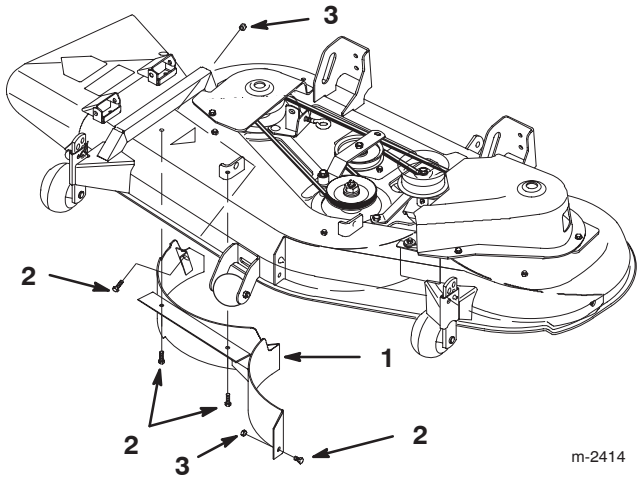

Figure 7

1. Baffle left side
2. Bolt 5/16-18 x 5/8” (16 mm)
3. Locknut 5/16-18

DANGER

POTENTIAL HAZARD

- **Open holes in the mower expose you and others to thrown debris.**

WHAT CAN HAPPEN

- **Debris thrown out of holes in the mower can cause injury.**

HOW TO AVOID THE HAZARD

- **Never operate mower without hardware mounted in all holes in mower.**
- **Install hardware in mounting holes when recycle baffle is removed.**


TORO®