Form Number 3356-321 Rev B

Z593-D Z Master®
With 152cm TURBO FORCE® Side Discharge Mower

Model No. 74265TE - 270000001 and up.

Parts Catalog

Ordering Replacement Parts
To order replacement parts, please supply the part number, the quantity, and the description of each part desired.

Understanding Reference Numbers
Each Identified part in an illustration has a reference number. The reference number for a part also appears in the parts list, along with other information about the part.

This catalog uses two special reference number formats, one to indicate parts in a service assembly and another to indicate the quantity of a given part in an illustration.

Service Assembly Reference Numbers
Parts in service assemblies have reference numbers in the form a:b. The a represents the reference number of the entire service assembly and the b represents a sequential number unique to each part within the service assembly.

For example, a wheel assembly might be identified by reference number 6, the tire by 6:1, the valve by 6:2, and the wheel by 6:3. When you order the assembly identified by reference number 6, you receive all parts identified by reference numbers 6:1, 6:2, and 6:3. However, you may also order any part individually. Reference numbers of this type appear in illustrations and in part lists.

Reference Numbers Indicating Quantity
In an illustration, if a reference number indicates more than one part, the reference number has the form nX y. The n represents the quantity of the part, the X is the multiplication symbol, and the y represents the reference number.

For example, in an illustration, the reference number 2X 37 means that two of the parts identified by reference number 37 are indicated.

Register your product at www.Toro.com

© The Toro Company - 2007
All Rights Reserved

Contents

Description	Page
Front Frame Assembly	4
Caster Wheel Assembly	6
Traction Frame and Floor Pan Assembly	7
Seat and Roll-Over Protection System Assembly	8
Deluxe Seat Assembly No. 110-0838	9
Roll-Over Protection System Assembly No. 110-0877	10
Parking Brake and Wheel Assembly	11
Hydro Control Assembly	12
Engine, Exhaust and Air Intake Assembly	13
Air Cleaner Assembly No. 93-2190	14
Hydro and Gearbox Assembly	15
Gearbox Assembly No. 107-9887	16
Hydraulic Tank, Motor and Pump Assembly	17
Tandem Pump Assembly No. 107-9885	19
Throttle, Control Panel and Fuel Tank Assembly	20
Engine Housing Assembly	21
Cooling System Assembly	22
Hood Assembly	23
Deck Connection Assembly	24
Deck Assembly	25
Deck Decal Assembly No. 108-5944	27
Spindle Assembly No. 108-7713	28
Rubber Deflector Assembly No. 108-2792	29
Lever Assembly No. 107-1664	30
Electrical Assembly	31
Crankcase Assembly	32
Oil Pan Assembly	33
Cylinder Head Assembly	34
Gear Case and Oil Filter Cartridge Assembly	35
Head Cover Assembly	36
Dipstick, Guide and Oil Pump Assembly	37
Main Bearing Case Assembly	38
Camshaft and Idle Gear Shaft Assembly	39
Piston and Crankshaft Assembly	40
Flywheel, Fuel Camshaft and Governor Shaft Assembly	41
Idle Apparatus and Stop Solenoid Assembly	42
Injection Pump and Governor Assembly	43
Speed Control Plate Assembly	44
Nozzle Holder and Glow Plug Assembly	45
Nozzle Holder Assembly	46
Fuel Pump and Fuel Filter Assembly	48
Alternator, Pulley and Fuel Pump Cover Assembly	49
Alternator Assembly	50
Starter Installation Assembly	51
Starter Assembly	52
Water Flange, Pump, Pipe and Thermostat Assembly	53
Valve and Rocker Arm Assembly	54
Inlet and Exhaust Manifold Assembly	55
Gasket Kit	56
Piston Kit	57
Attachments and Accessories List	58

Part Description Abbreviations

Part descriptions in this catalog may include the following abbreviations.

AR. . . . . as required
ASM. . . . . assembly
BBC. . . . . blade brake clutch
CARR. . . . . carriage
DEG. . . . . degrees
EXT. . . . . external
FH. . . . . flat head
GA. . . . . gauge
HD. . . . . heavy-duty
HF. . . . . hex flange
HH. . . . . hex head
HHF. . . . . hex head flange
HHFTF. . . . . hex head flange thread forming
HJ. . . . . hex jam
HLH. . . . . hex lag head
HOC. . . . . height-of-cut
HSBH. . . . . hex socket button head
HSFH. . . . . hex socket flat head
HSH. . . . . hex socket head
HWH. . . . . hex washer head
HWHTF. . . . . hex washer head thread forming
HYD. . . . . hydraulic
LH. . . . . left hand
NI. . . . . nylon insert
NPTF. . . . . national pipe thread fine
PFH. . . . . phillips flat head
PPH. . . . . phillips pan head
PPHTF. . . . . phillips pan head thread forming
PRH. . . . . phillips round head
PTH. . . . . phillips truss head
PTO. . . . . power-take-off
RH. . . . . right hand
ROPS. . . . . roll-over protection system
SFH. . . . . slotted fillister head
SHH. . . . . slotted hex head
SHWH. . . . . slotted hex washer head
SPH. . . . . slotted pan head
SQH. . . . . square head
SRH. . . . . slotted round head
STD. . . . . standard
TAP. . . . . self tapping
TTH. . . . . torx truss head

Footnotes

❶ Not illustrated

❷ Not serviced separately

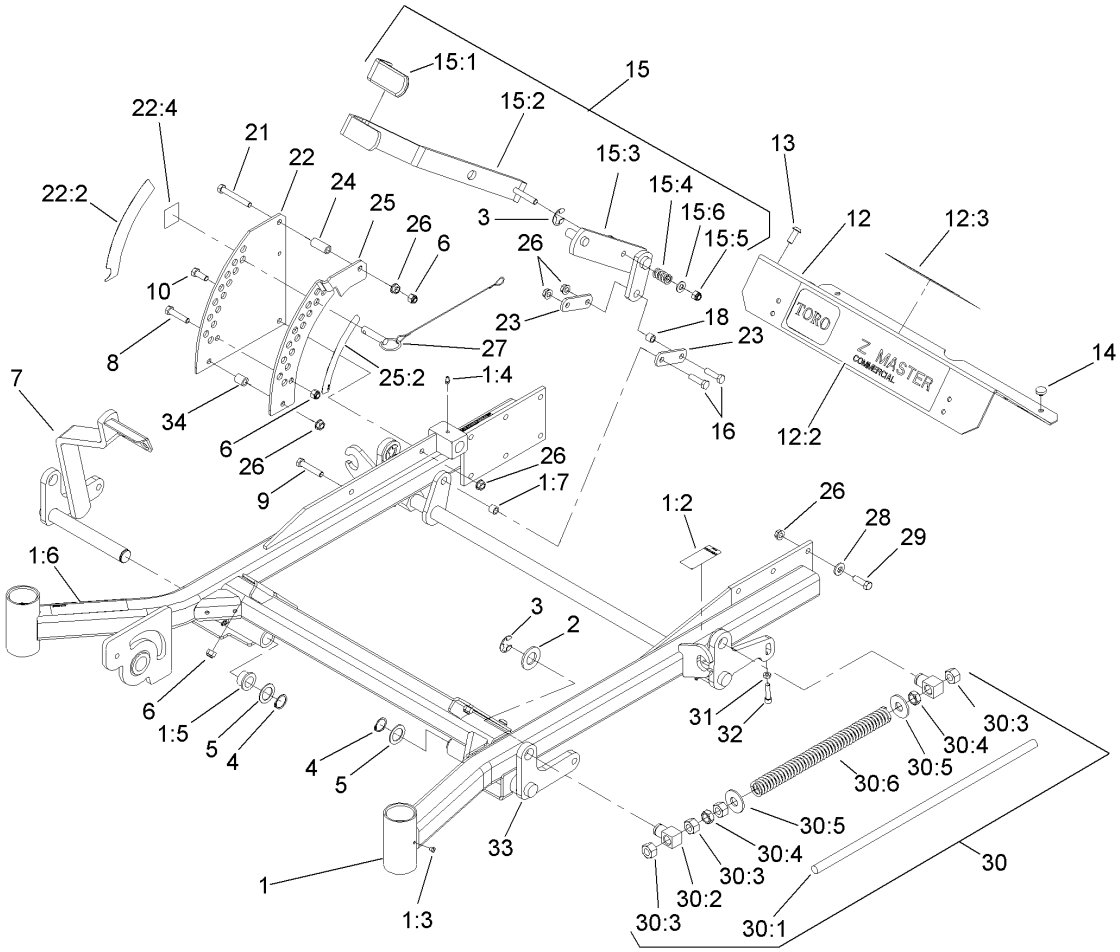

Front Frame Assembly

Ref	Part No.	Qty.	Description
1	107-3980	1	Frame ASM
1:2	107-3968	1	Decal-Brake, Parking
1:3	1-811010	2	Plug
1:4	302-19	5	Fitting-Grease
1:5	94-1291	2	Bushing
1:6	107-3969	1	Decal-Warning
1:7	103-1918	1	Bushing
2	3256-29	4	Washer-Flat
3	32151-103	5	Ring-Snap
4	32151-29	2	Ring-Retaining
5	1-523157	2	Washer-Spacer
6	3296-39	6	Nut-Lock, NI
7	108-7786-01	1	RH Front Deck Lift ASM
8	323-9	1	Screw-HH
9	323-10	1	Screw-HH
10	323-6	1	Screw-HH
12	107-3976	1	Footrest
12:2	106-7451	1	Decal
12:3	107-1866	1	Decal-Danger, Slope
13	3274-94	4	Screw-HSBH
14	1-513658	2	Bumper
15	110-5860	1	Deck Lift Handle ASM
15:1	1-633295	1	Grip-Lever, Lift
15:2	103-2083	1	Lever-Lift

Ref	Part No.	Qty.	Description
15:3	103-2064	1	Arm-Lift, Deck
15:4	1-633325	1	Spring-Compression
15:5	3296-39	1	Nut-Lock, NI
15:6	3256-24	1	Washer-Flat
16	323-29	2	Screw-HH
18	103-1918	1	Bushing
21	323-13	1	Screw-HH
22	110-0835	1	Plate-Deck Lift, Outer (Ce)
22:2	107-3961	1	Decal-Deck Height, Large
22:4	105-4674	1	Decal-Noise
23	1-633068	2	Arm-Lift, Deck
24	1-633082	1	Bushing-Lever, Lift
25	110-0836	1	Plate-Deck Lift, Inner (Ce)
25:2	107-3962	1	Decal-Deck Height, Small
26	3290-357	17	Nut-HHF, Whiz
27	106-9951	1	Hitch Pin ASM
28	98-5975	12	Washer-Belleville
29	323-7	12	Screw-HH
❷30		2	Front Frame Spring ASM
30:1	1-633096	1	Rod-Lift, Deck
30:2	1-633441	2	Swivel-Deck Mount, Rear
30:3	3217-11	4	Nut-Hex
30:4	3218-6	2	Nut-Jam
30:5	3256-7	2	Washer-Flat

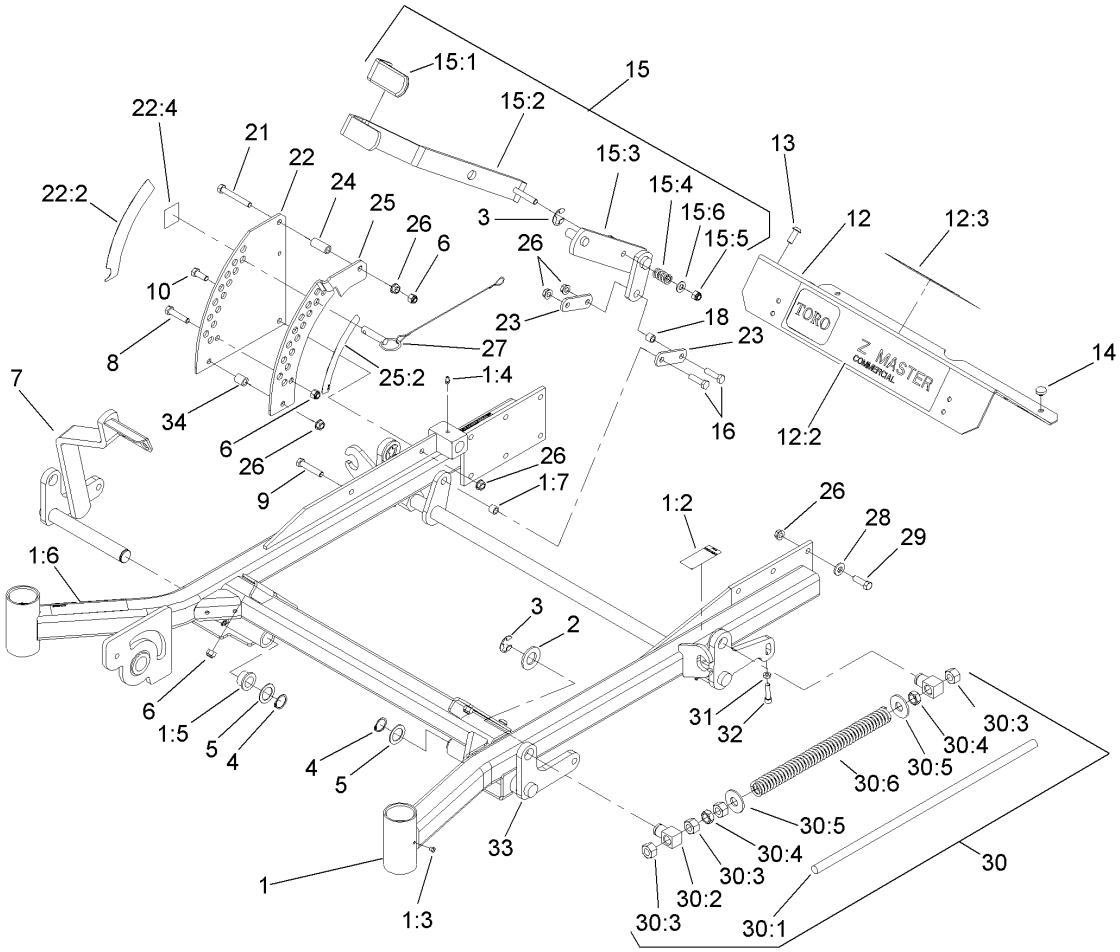

Front Frame Assembly (continued)

Ref	Part No.	Qty.	Description
30:6	1-633064	1	Spring-Support, Deck
31	3218-2	2	Nut-Jam
32	3274-18	2	Screw-HSH
33	106-8984-01	1	LH Deck Lift ASM
34	1-633080	1	Bushing-Lever, Lift

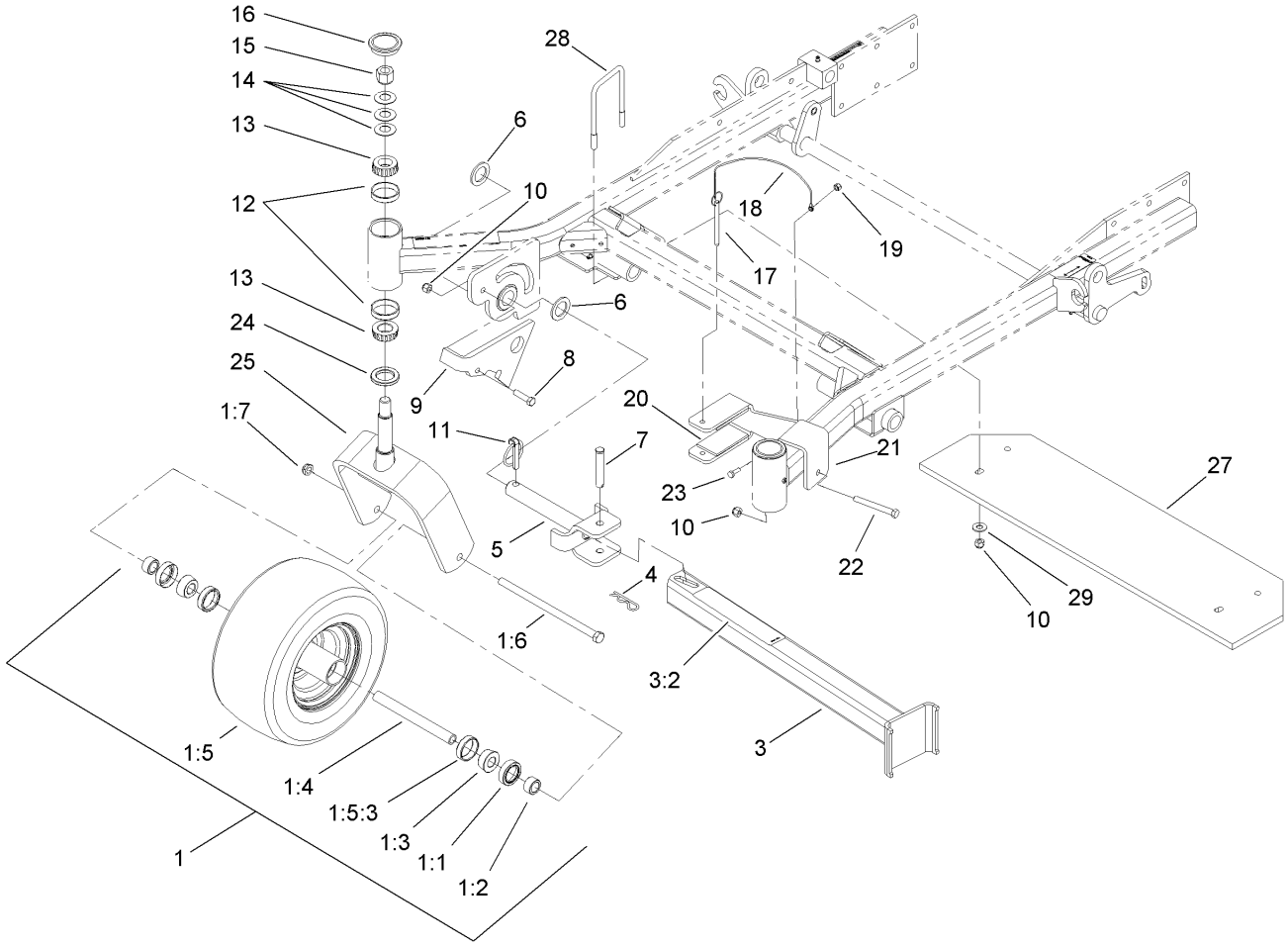

Caster Wheel Assembly

Ref	Part No.	Qty.	Description
1	110-5746	2	Castor Wheel ASM
1:1	1-633580	2	Seal-Bearing
1:2	1-633581	2	Spacer-Bearing
1:3	1-633585	2	Bearing-Cone, Taper
1:4	1-633959	1	Spacer-Caster, Front
1:5	110-5744	1	Wheel And Tire ASM (Semi-Pneumatic)
1:5:3	1-633584	1	Bearing-Cup
1:6	325-24	1	Screw-HH
1:7	3296-45	1	Nut-Lock, NI
3	107-1874	1	Leg ASM
3:2	106-7464	1	Decal-Z Stand
4	3290-355	1	Pin-Hair
5	100-9692-01	1	Pivot Pin ASM
6	3-6781	2	Washer-Thrust
7	283-55	1	Pin-Clevis
8	323-8	1	Screw-HH
9	100-9686-01	1	Bracket-Latch
10	3296-39	6	Nut-Lock, NI
11	283-71	1	Pin-Lynch
12	254-72	4	Bearing-Cup, Tapered
13	254-94	4	Bearing-Cone, Tapered
14	1-633508	6	Washer-Bellville
15	3296-51	2	Nut-Lock, NI

Ref	Part No.	Qty.	Description
16	103-4882	2	Cap-Grease
17	105-1647	1	Pin-Hitch, Cotterless
18	100-9385	1	Lanyard-Nylon
19	3296-42	1	Nut-Lock, NI
20	100-6547	2	Cushion-Rubber
21	100-6542-01	1	Bracket-Cradle
22	323-20	1	Screw-HH
23	321-4	1	Screw-HH
24	1-543511	2	Seal-Grease
25	103-1474-01	2	Fork-Caster
27	107-9854-01	1	Bar-Weight
28	110-0817	2	U-Bolt, 3 Inch
29	3256-4	4	Washer-Flat

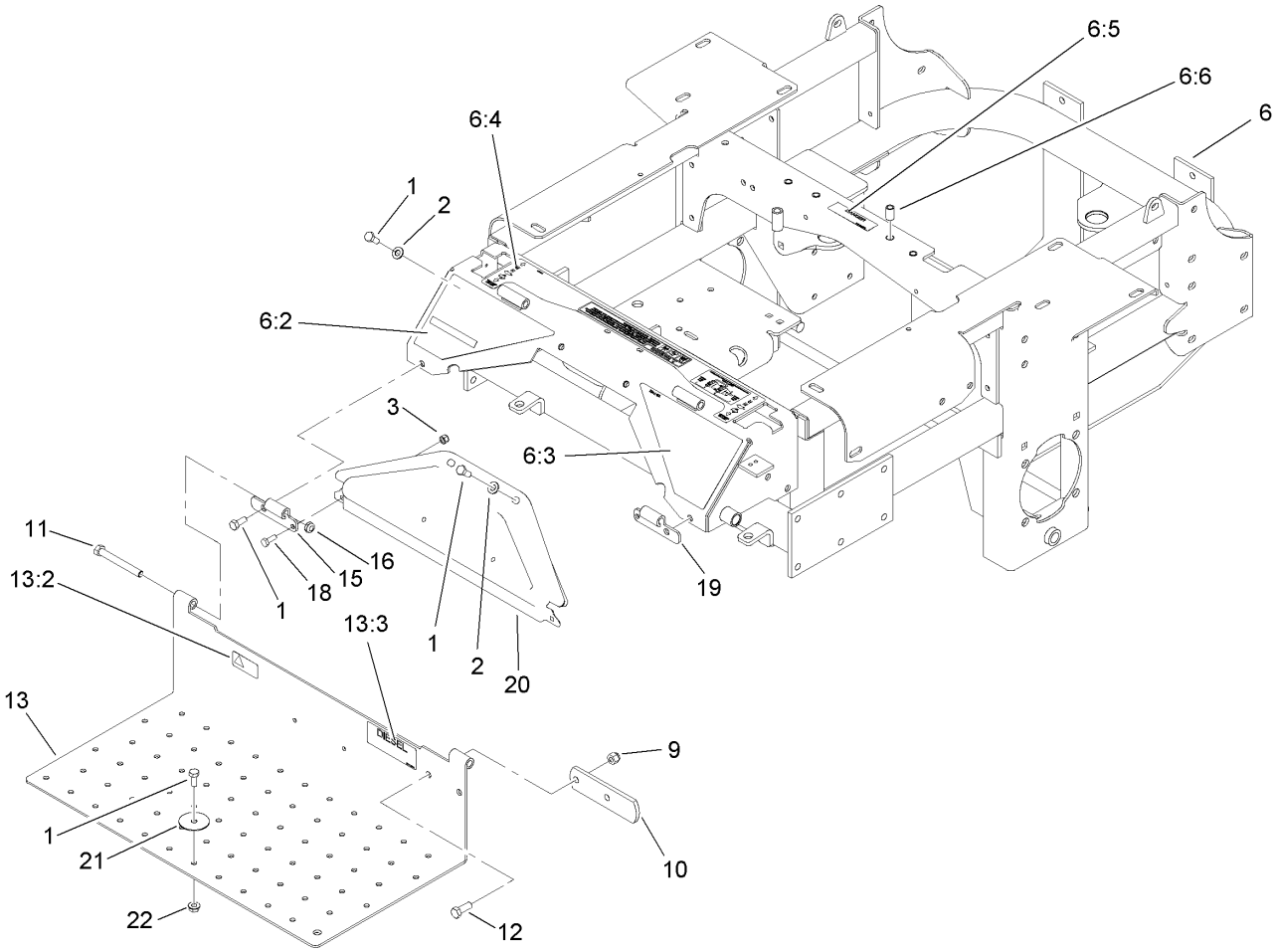

Traction Frame and Floor Pan Assembly

Ref	Part No.	Qty.	Description
1	322-43	7	Screw-HH
2	3256-70	4	Washer-Flat
3	3296-42	2	Nut-Lock, NI
6	112-2361	1	Traction Frame ASM
6:2	107-3963	1	Decal-Danger, Left
6:3	107-3964	1	Decal-Warning, Right
6:4	110-0820	1	Decal-Console, Top (Ce)
6:5	98-1977	2	Decal-Warning
6:6	32148-11	5	Insert-Threaded
9	3296-39	2	Nut-Lock, NI
10	1-633964-03	1	Stop-Brake, Park
11	323-20	2	Screw-HH
12	323-6	2	Screw-HH
13	110-3857	1	Floor Pan ASM
13:2	98-4387	1	Decal-Protection, Ear
13:3	107-7666	1	Decal-Diesel
15	106-7488-03	1	Hinge-Floorpan, LH
16	3296-59	2	Nut-Lock, NI
18	321-4	2	Screw-HH
19	106-7489-03	1	Hinge-Floorpan, RH
20	106-7498	1	Pocket
21	1-653036	1	Washer
22	32128-25	1	Nut-HF

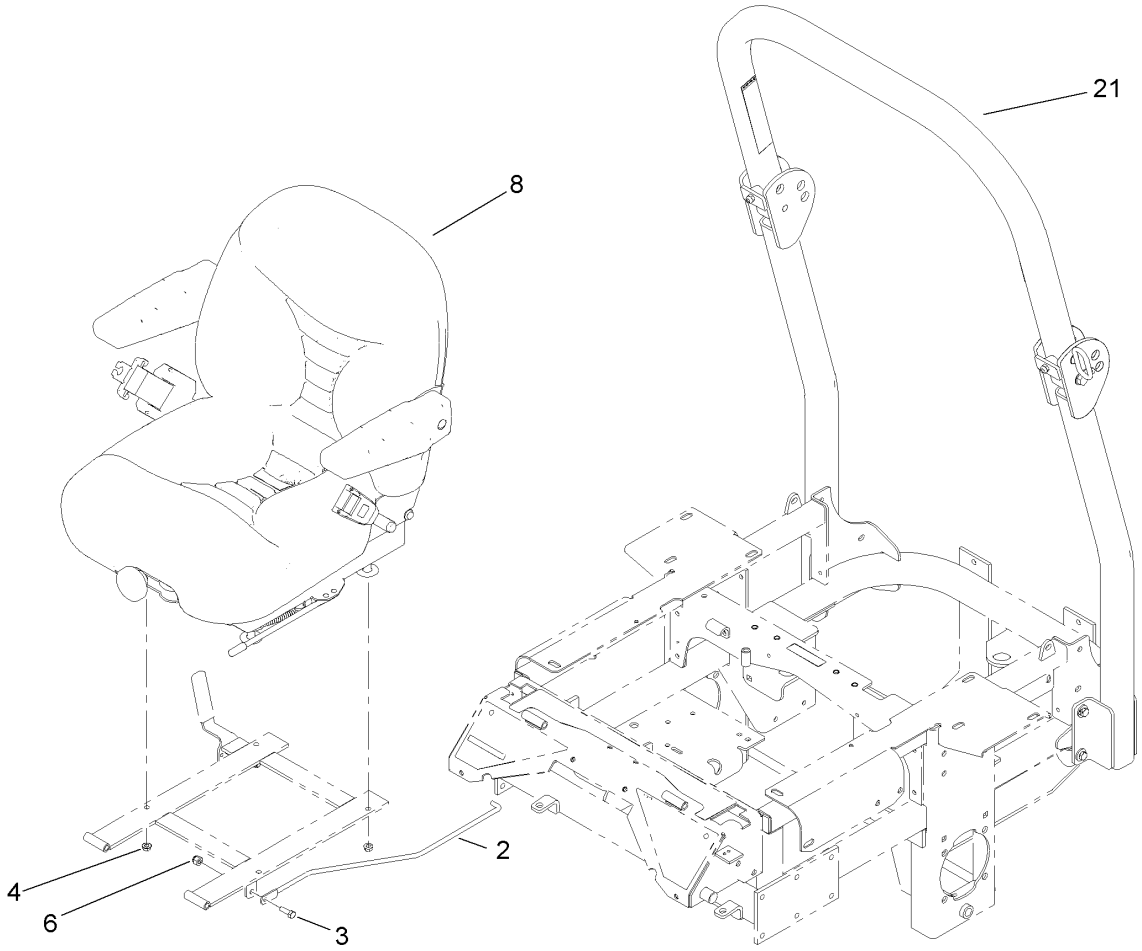

Seat and Roll-Over Protection System Assembly

Ref	Part No.	Qty.	Description
2	108-5341	1	Rod-Prop, Seat
3	322-5	1	Screw-HH
4	32128-20	4	Nut-HF
6	3296-29	3	Nut-Lock, NI
8	110-0838	1	Deluxe Seat ASM
21	110-0877	1	ROPS Kit

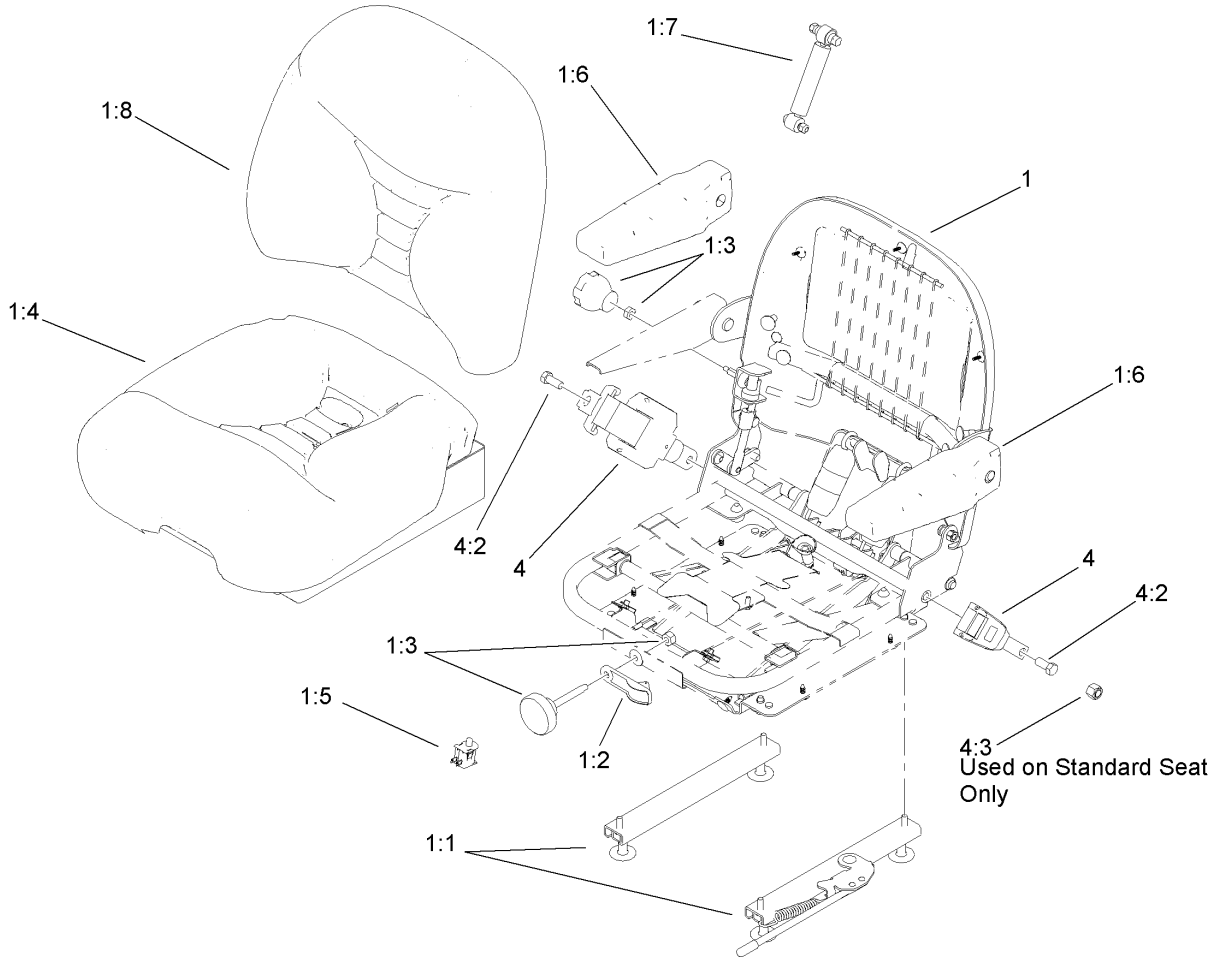

Deluxe Seat Assembly No. 110-0838

Ref	Part No.	Qty.	Description
❷1		1	Seat ASM
1:1	107-1880	1	Seat Track Kit
1:2	107-1885	1	Weight Indicator Kit
1:3	107-1881	1	Knob Kit
1:4	107-1883	1	Bottom Cushion Kit
1:5	107-1886	1	Switch Kit
1:6	107-1887	1	Armrest Kit
1:7	107-1884	1	Shock Absorber Kit
1:8	107-1882	1	Back Cushion Kit
4	110-0883	1	Retractable Seatbelt Kit
4:2	3212-4	2	Screw-HH
4:3	3296-7	2	Nut-Lock

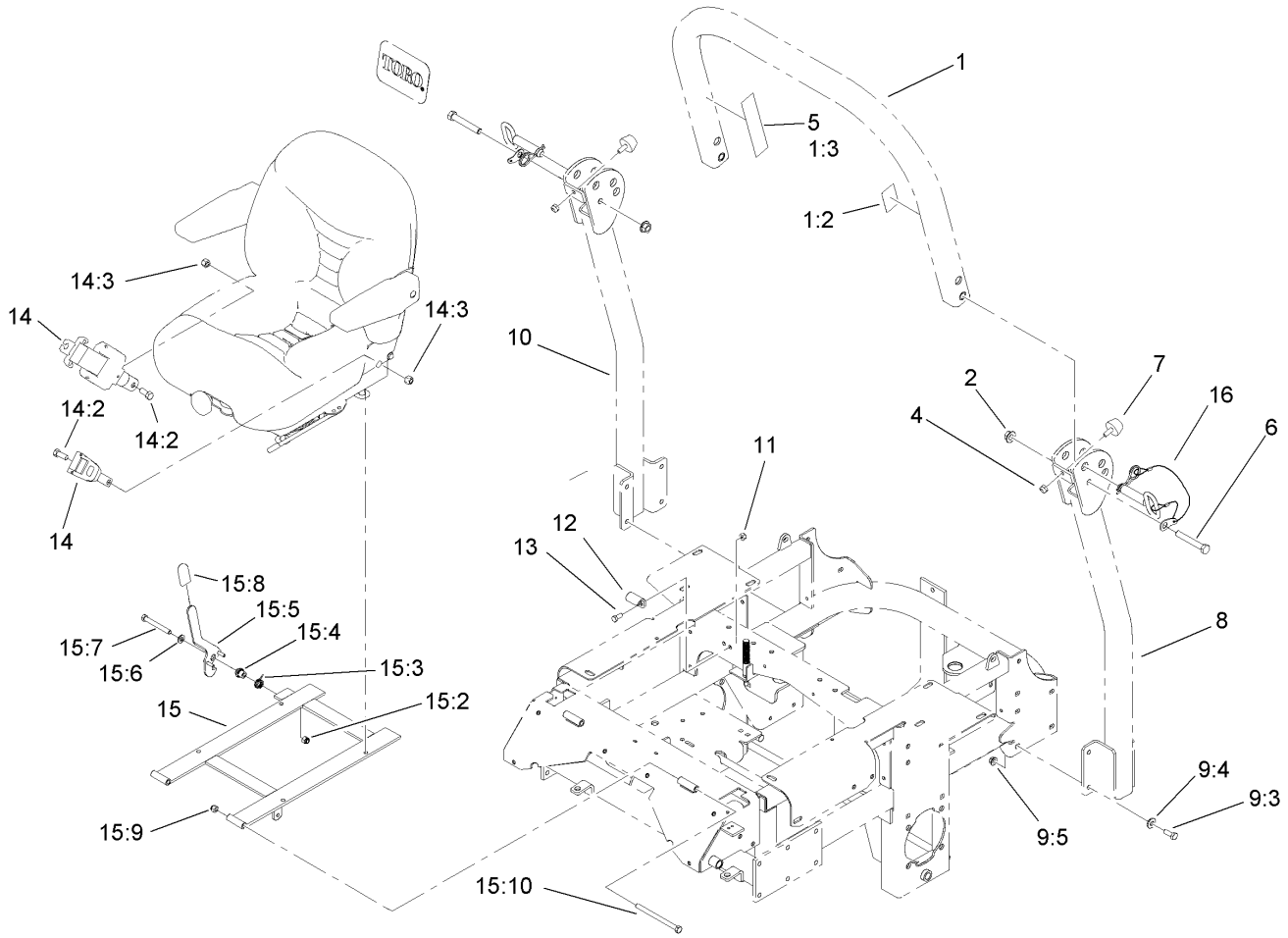

Roll-Over Protection System Assembly No. 110-0877

Ref	Part No.	Qty.	Description
❷1		1	Upper Tube ASM
1:2	107-2101	1	Decal-ROPS
1:3	107-2102	1	Decal-Warning, Folding ROPS
2	32128-23	2	Nut-HF
4	3296-73	2	Nut-Lock, NI
5	107-3069	1	Decal-Warning, Folding ROPS (Ce)
6	325-13	2	Screw-HH
7	109-2365	2	Bumper-Rubber (W/Stud)
❷8		1	Tube-Support, LH
❶9		1	Bag-Bolt, ROPS
9:3	323-6	8	Screw-HH
9:4	98-5975	8	Washer-Belleville
9:5	3290-357	8	Nut-HHF, Whiz
❷10		1	Tube-Support, RH
11	3296-29	2	Nut-Lock, NI
12	107-3058	1	Catch-Latch, Seat
13	322-3	2	Screw-HH
14	110-0883	1	Retractable Seatbelt Kit
14:2	3212-4	2	Screw-HH
14:3	3296-7	2	Nut-Lock
15	110-0874	1	Seatframe ASM
15:2	3296-39	1	Nut-Lock, NI
15:3	107-0076	1	Spring-Torsion

Ref	Part No.	Qty.	Description
15:4	107-0075	1	Bushing-Latch, Seat
15:5	107-3083	1	Latch ASM
15:6	3256-24	1	Washer-Flat
15:7	323-20	1	Screw-HH
15:8	103-4434	1	Grip-Lever
15:9	3296-39	2	Nut-Lock, NI
15:10	323-39	2	Screw-HH
16	103-4553	2	ROPS Fold Pin ASM

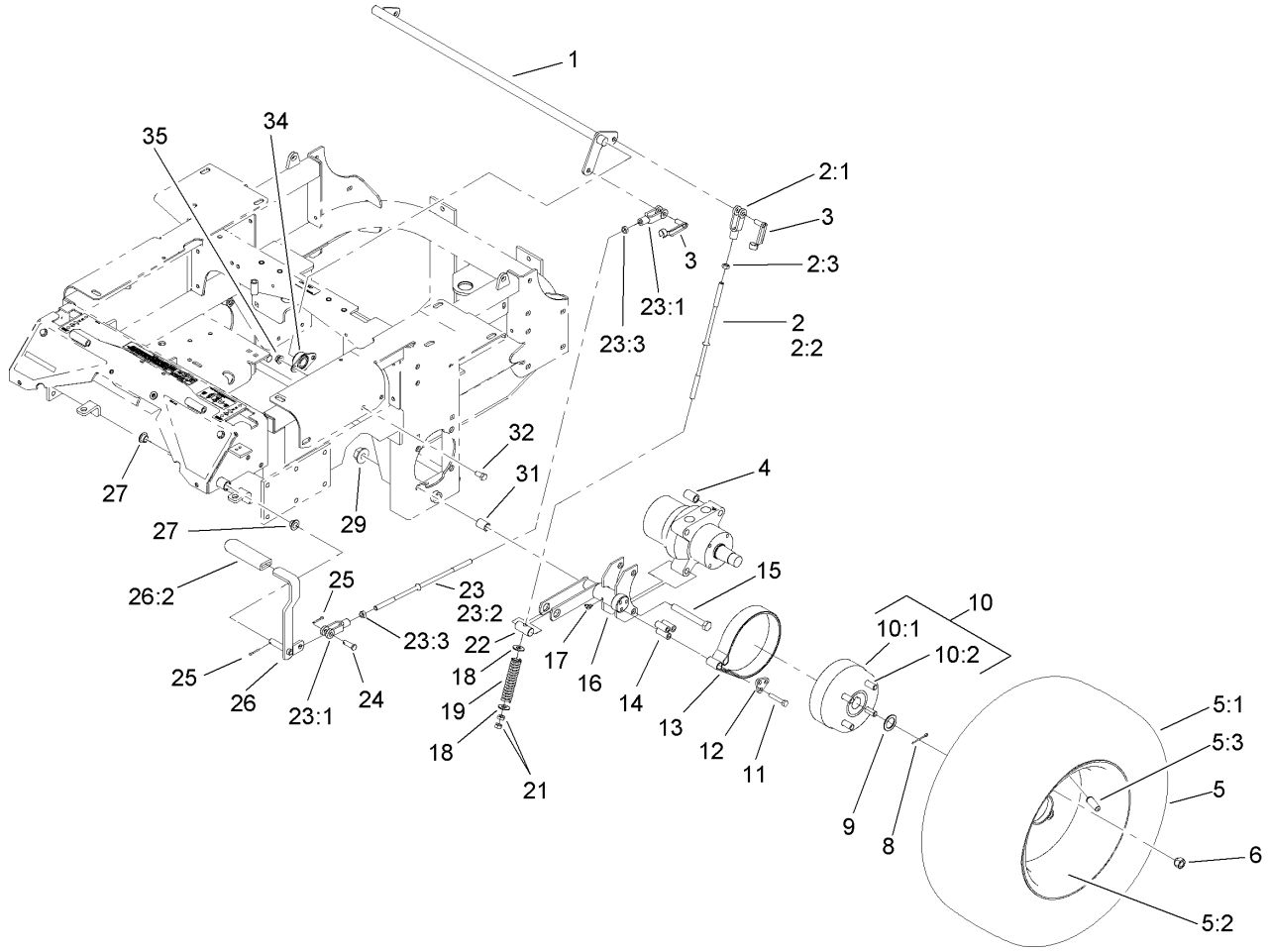

Parking Brake and Wheel Assembly

Ref	Part No.	Qty.	Description
1	1-632217-03	1	Shaft-Brake
2	108-5963	2	Brake Rod ASM
2:1	1-633131	1	Yoke-Linkage, Brake
2:2	108-5980	1	Rod, Brake
2:3	3219-3	1	Nut-Hex
3	103-2399	3	Pin-Spring, Clevis
4	1-633382	4	Spacer-Wheel, Long
5	1-633970	2	Wheel And Tire ASM
5:1	1-633993	1	Tire
5:2	1-633992	1	Wheel Rim
5:3	232-27	1	Stem-Valve
6	242-50	8	Nut-Lug
8	1-806800	2	Pin-Cotter
9	1-523157	2	Washer-Spacer
10	103-0590	2	Hub And Wheel ASM
10:1	103-0589	1	Wheel Hub ASM
10:2	1-633926	4	Stud-Wheel
11	322-9	6	Screw-HH
12	103-0374	2	Retainer-Band, Brake
13	103-0355	2	Band-Brake
14	103-0384	6	Spacer
15	325-17	8	Screw-HH
16	103-0352-03	2	Bracket-Brake
17	1481	2	Fitting-Grease

Ref	Part No.	Qty.	Description
18	3256-4	4	Washer-Flat
19	1-633454	2	Spring-Brake
21	3219-3	4	Nut-Hex
22	1-633144	2	Pin-Trunion
23	108-5962	1	Brake Rod ASM
23:1	1-633131	2	Yoke-Linkage, Brake
23:2	1-633477	1	Rod-Brake
23:3	3219-3	2	Nut-Hex
24	1-808285	1	Pin-Clevis
25	3272-10	2	Pin-Cotter
26	1-634500	1	Brake Lever ASM
26:2	1-633268	1	Grip-Lever, Brake
27	1-513140	2	Bearing-Control
29	32128-49	8	Nut-HHF
31	1-633380	4	Spacer-Wheel, Short
32	323-4	4	Screw-HH
34	1-633102	2	Bearing-Flange, Side
35	3290-357	4	Nut-HHF, Whiz

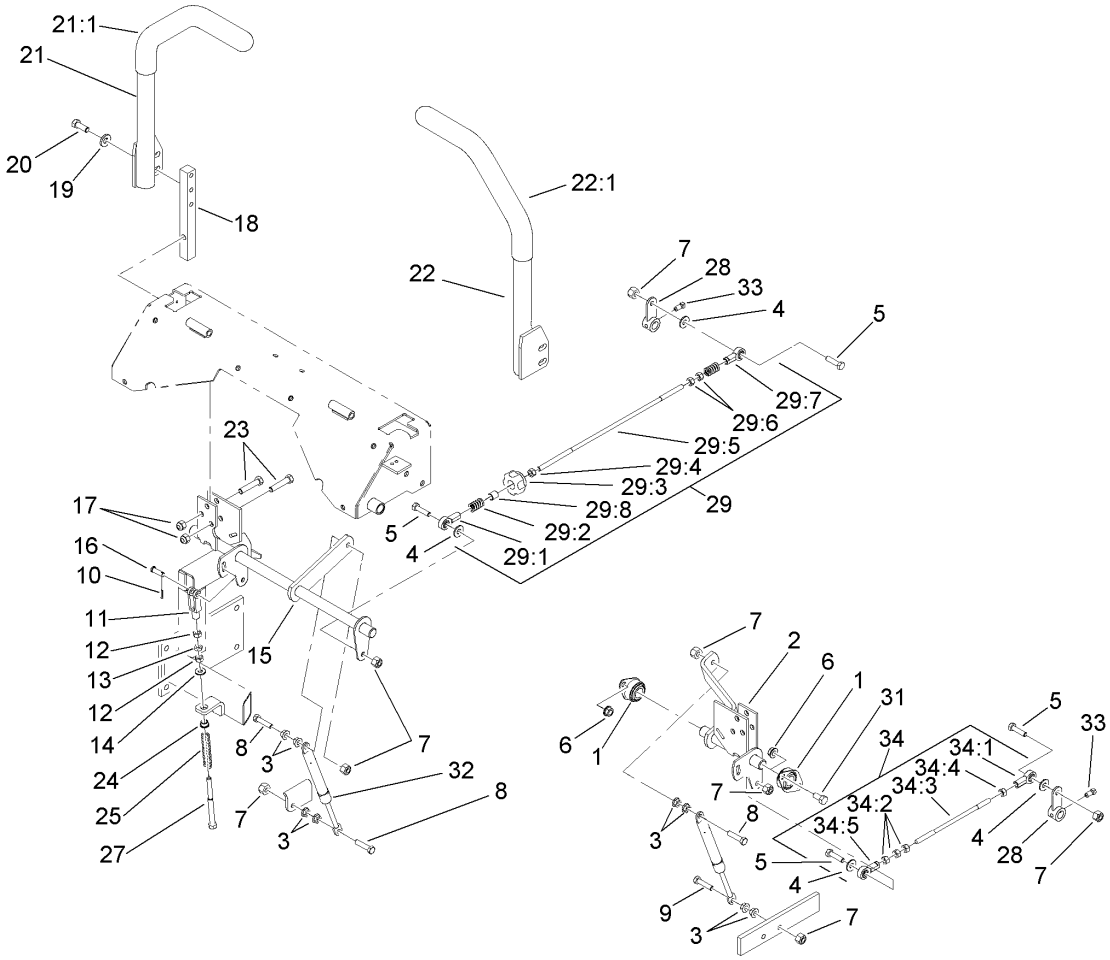

Hydro Control Assembly

Ref	Part No.	Qty.	Description
1	1-633102	4	Bearing-Flange, Side
2	107-3480	1	LH Motion Control ASM
3	32128-20	10	Nut-HF
4	3256-3	4	Washer-Flat
5	322-6	4	Screw-HH
6	3290-357	6	Nut-HHF, Whiz
7	3296-29	8	Nut-Lock, NI
8	1-403180	3	Screw-HH
9	322-41	1	Screw-HH
10	3272-5	2	Pin-Cotter
11	1-303105	2	Yoke-Adjustable
12	3219-2	4	Nut-Hex
13	3220-2	2	Nut-Jam
14	3256-2	2	Washer-Flat
15	107-3481	1	RH Motion Control ASM
16	1-808280	2	Pin-Clevis
17	3296-39	6	Nut-Lock, NI
18	103-0407	2	Arm-Shaft, Control
19	98-5975	4	Washer-Belleville
20	323-6	4	Screw-HH
21	108-7237	1	RH Lever ASM
21:1	106-9987	1	Grip-Control, Motion
22	108-7238	1	LH Lever ASM
22:1	106-9987	1	Grip-Control, Motion

Ref	Part No.	Qty.	Description
23	323-9	6	Screw-HH
24	1-603735	2	Bushing-Flanged
25	1-603807	2	Spring-Return, Neutral
27	1-603737	2	Bolt-Return, Neutral
28	107-3470-03	2	Hydraulic Control Arm ASM
29	107-3474	1	RH Control Rod ASM
29:1	1-543017	1	Balljoint-RH
29:2	1-323245	2	Spring-Compression
29:3	103-3060	1	Knob-Tracking
29:4	3219-2	1	Nut-Hex
29:5	107-3472	1	Rod-Control, RH
29:6	1-804524	2	Nut
29:7	1-633152	1	Balljoint-LH
29:8	103-1166	1	Spacer-Tube, Pump Link
31	323-4	6	Screw-HH
32	109-2339	2	Damper-Control, Motion
33	1-803022	2	Screw-Set
34	107-3475	1	LH Control Rod ASM
34:1	1-543017	1	Balljoint-RH
34:2	3219-2	3	Nut-Hex
34:3	107-3473	1	Rod-Control, LH
34:4	1-804524	1	Nut
34:5	1-633152	1	Balljoint-LH

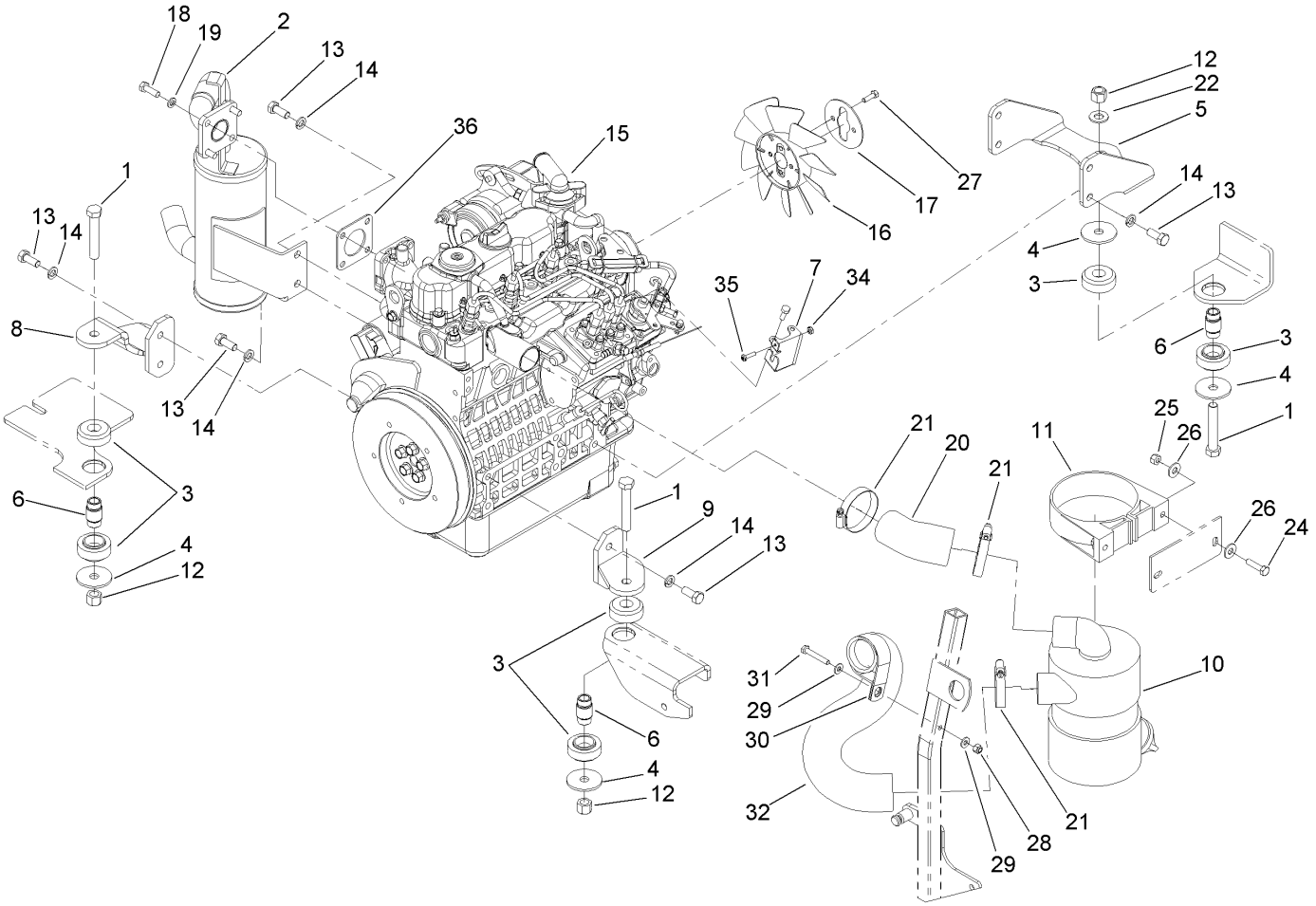

Engine, Exhaust and Air Intake Assembly

Ref	Part No.	Qty.	Description
1	325-12	3	Screw-HH
2	107-9909	1	Muffler
3	107-9914	3	Mount-Isolation
4	55-7960	4	Washer-Blade, Large
5	107-9917-03	1	Bracket-Engine Mount, Rear
6	110-0300	3	Spacer
7	108-5922	1	Bracket-Support, Throttle
8	107-9920-03	1	RH Engine Support ASM
9	107-9930-03	1	LH Engine Support ASM
10	93-2190	1	Air Cleaner ASM
11	95-5806	1	Bracket-Mounting
12	3296-23	3	Nut-Lock, NI
13	43-0090	10	Screw-HH
14	42-9600	10	Washer-Lock, Spring
15	107-9911	1	Engine-Kubota
16	110-0814	1	Fan
17	110-0816	1	Plate-Reatainer, Fan
18	33114-025	4	Screw-HH
19	3253-4	4	Washer-Lock
20	108-5371	1	Hose-Intake, Air Cleaner
21	1-643009	3	Clamp-Hose
22	3256-26	1	Washer-Flat
24	322-6	2	Screw-HH
25	3296-29	2	Nut-Lock, NI

Ref	Part No.	Qty.	Description
26	3256-23	4	Washer-Flat
27	33113-020	2	Screw-HH
28	3296-42	1	Nut-Lock, NI
29	3256-22	2	Washer-Flat
30	1-643241	1	Clip-Loom
31	321-10	1	Screw-HH
32	108-5370	1	Hose-Intake, Engine
34	3217-26	1	Nut-Hex
35	110-0863	1	Screw-Torx
36	99-8343	1	Gasket-Muffler

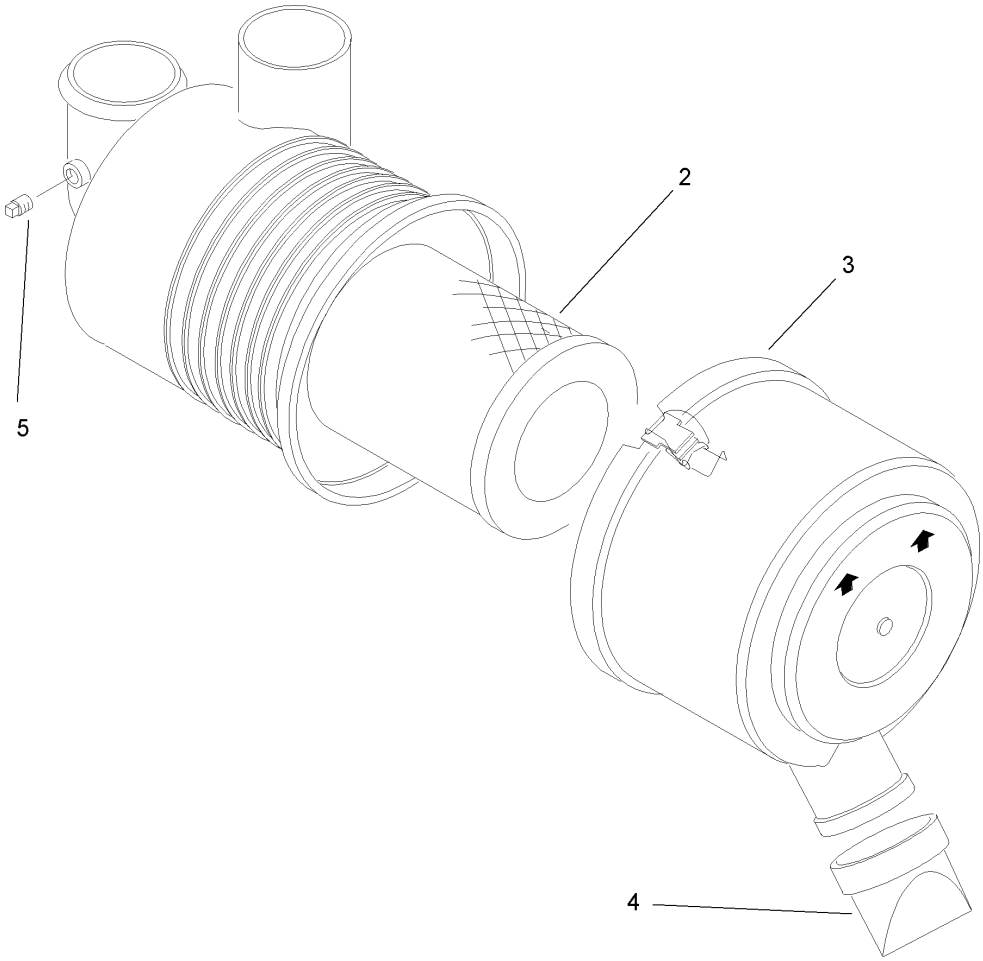

Air Cleaner Assembly No. 93-2190

Ref	Part No.	Qty.	Description
2	108-3811	1	Filter-Air
3	94-3652	1	Cover ASM
4	87-9400	1	Valve-Vacuator
5	285-17	1	Plug-Pipe

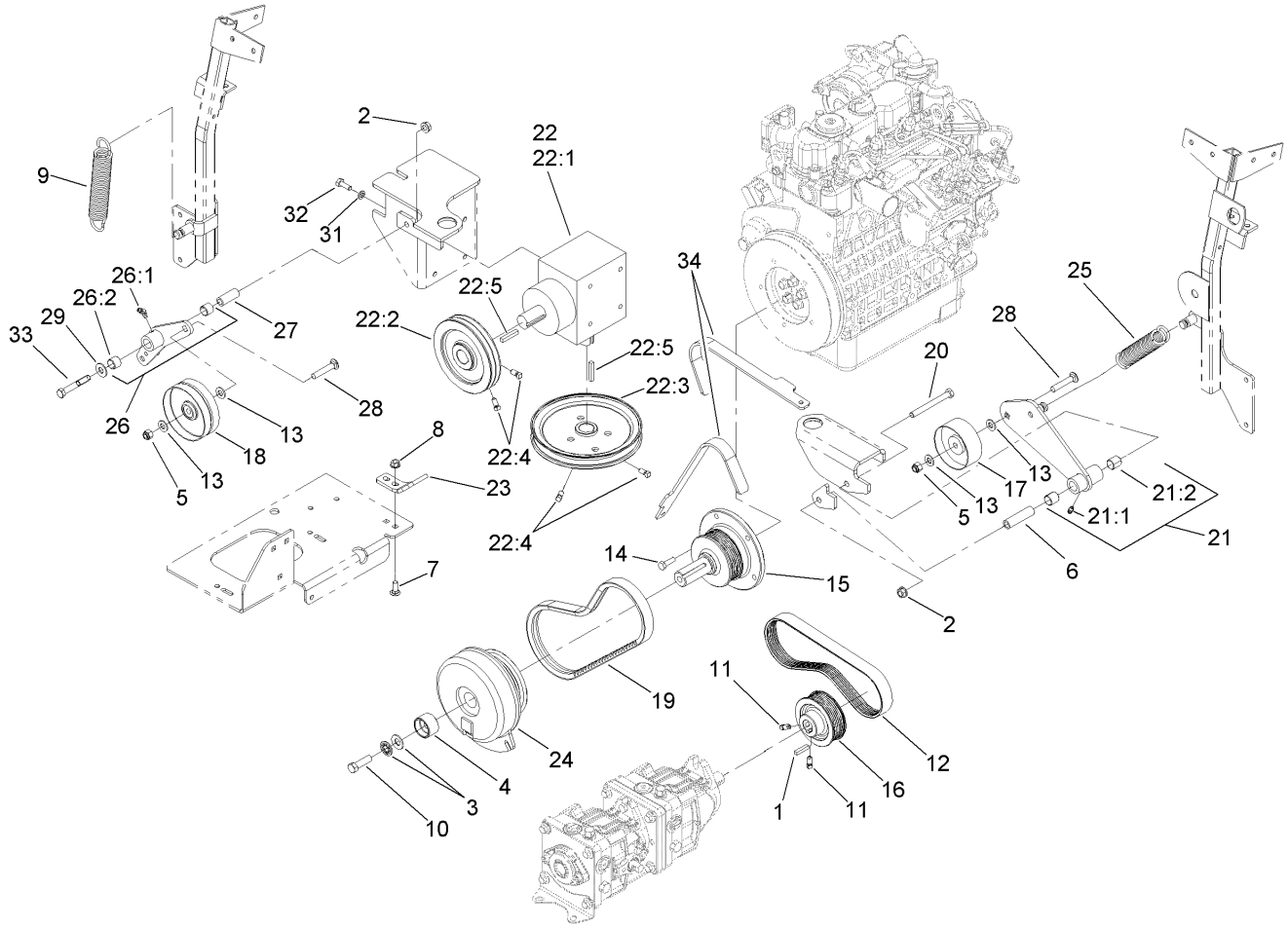

Hydro and Gearbox Assembly

Ref	Part No.	Qty.	Description
1	5-0698	1	Key
2	3290-357	2	Nut-HHF, Whiz
3	1-603610	2	Washer-Spring
4	110-0854	1	Retainer-Clutch
5	3296-39	2	Nut-Lock, NI
6	1-603384	1	Bushing-Pivot, Idler
7	3230-16	2	Screw-CARR
8	32128-25	2	Nut-HF
9	110-0818	1	Spring-Extension
10	3212-6	1	Screw-HH
11	1-803022	2	Screw-Set
12	107-9910	1	Belt-V
13	3256-24	4	Washer-Flat
14	33114-025	5	Screw-HH
15	108-5975	1	Shaft-Stub
16	108-5976	1	Pulley
17	108-5910	1	Pulley-Flat
18	110-0803	1	Pulley-Flat
19	110-0805	1	Belt-V
20	323-15	1	Screw-HH
21	108-5939	1	Pump Idler Arm ASM
21:1	302-5	1	Fitting-Grease
21:2	1-513034	2	Sleeve-Bearing
❷22		1	Gearbox ASM

Ref	Part No.	Qty.	Description
22:1	107-9887	1	Gearbox-90 DEG
22:2	108-5912	1	Pulley
22:3	110-0893	1	Pulley
22:4	1-803022	4	Screw-Set
22:5	67-7490	2	Key-Square
23	110-0815	1	Bracket-Clutch Stop
24	110-0862	1	Clutch-Electromagnetic
25	108-5985	1	Spring-Extension
26	112-2354	1	Gearbox Idler ASM W/Bearings
26:1	1481	1	Fitting-Grease
26:2	103-4681	2	Sleeve-Bearing
27	1-603044	1	Bushing
28	3231-6	2	Screw-CARR
29	3256-4	1	Washer-Flat
31	3253-4	4	Washer-Lock
32	322-4	4	Screw-HH
33	323-12	1	Screw-HH
34	110-0876	1	Tool-Alignment, Pulley

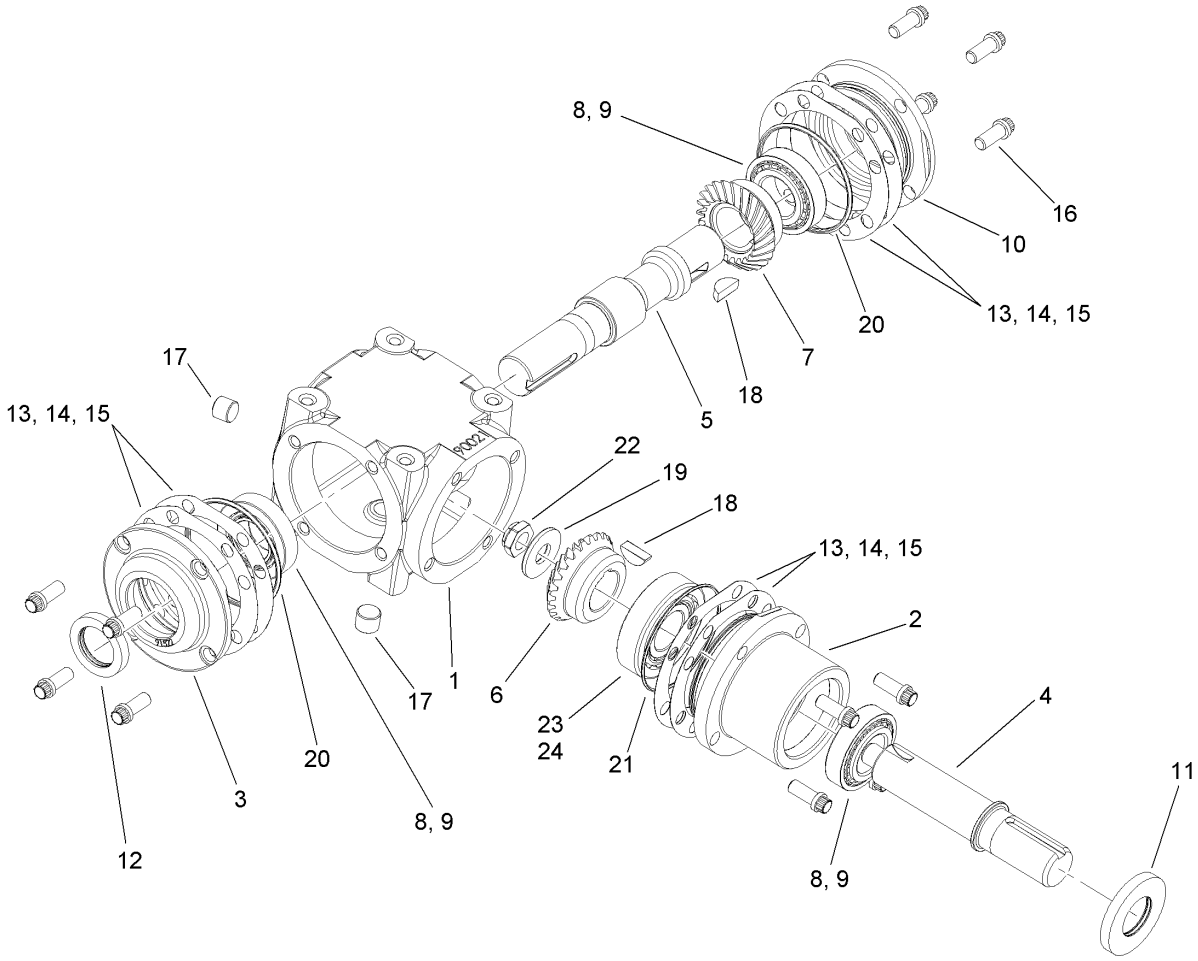

Gearbox Assembly No. 107-9887

Ref	Part No.	Qty.	Description
1	110-0843	1	Case
2	110-0853	1	Housing-Pinion
3	100-4566	1	Cap-End, Open
4	110-0844	1	Shaft-Pinion
5	110-0845	1	Shaft-Cross
6	110-0847	1	Gear-Shaft, Cross
7	110-0846	1	Gear-Pinion
8	110-0848	3	Bearing-Cup
9	110-0849	3	Bearing-Cone
10	100-4574	1	Cap-End, Closed
11	100-4575	1	Seal
12	110-0850	1	Seal-Shaft, Cross
13	100-4591	1	Shim-Brown, .010In
14	100-4592	1	Shim-Blue, .005In
15	100-4593	1	Shim-Green, .003In
16	100-4578	12	Screw
17	100-4579	2	Plug
18	3257-33	2	Key-Woodruff
19	100-4581	1	Washer
20	100-4582	2	O-Ring
21	110-0851	1	O-Ring
22	110-0852	1	Nut Lock
23	100-5817	1	Bearing-Cup
24	100-5816	1	Bearing-Cone

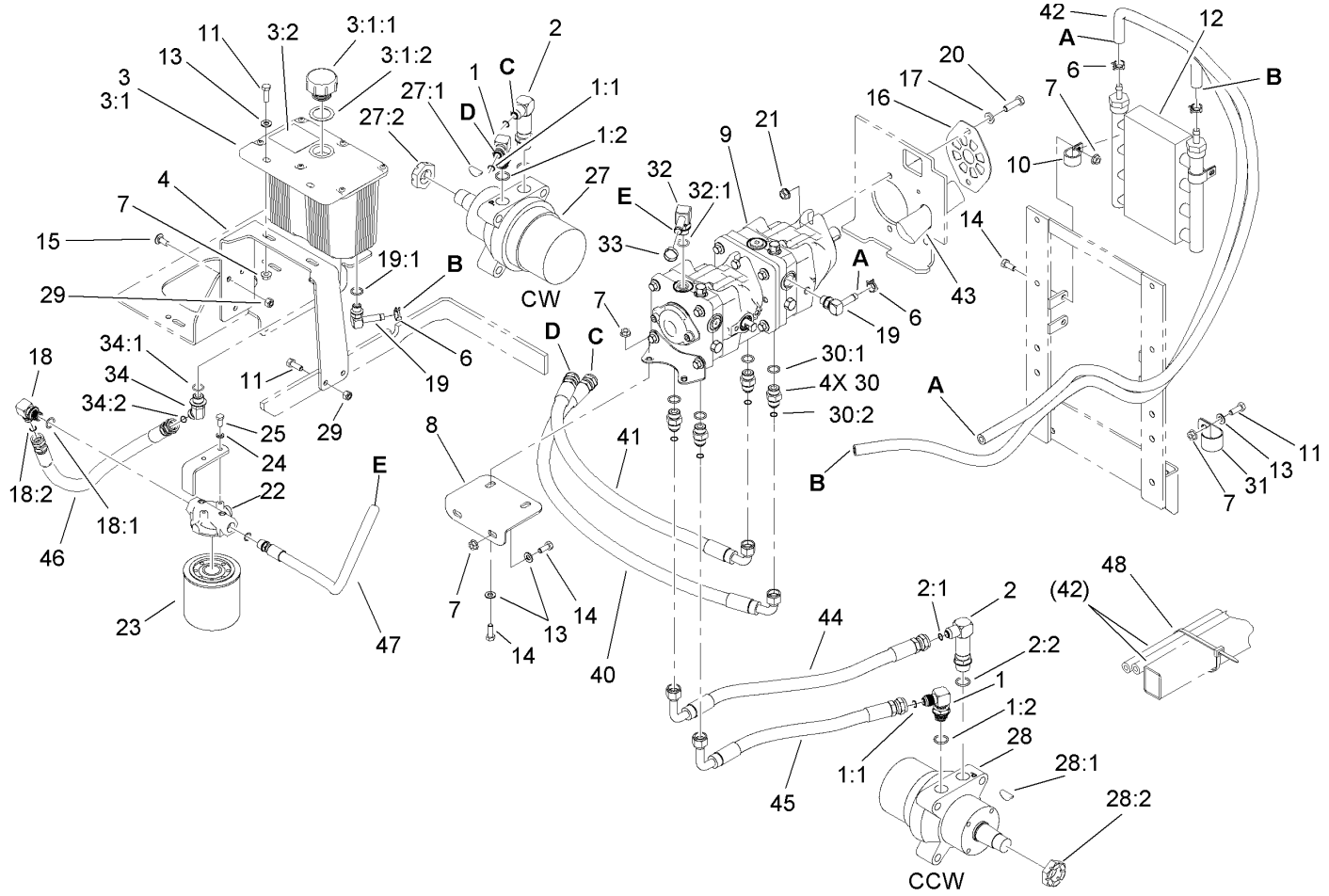

Hydraulic Tank, Motor and Pump Assembly

Ref	Part No.	Qty.	Description
1	1-633605	2	Fitting-HYD, 90 DEG
1:1	1-603992	1	O-Ring
1:2	237-80	1	O-Ring
2	108-5323	2	Fitting-Elbow-90
2:1	1-603992	1	O-Ring
2:2	237-80	1	O-Ring
3	108-5320	1	Hydraulic Tank ASM
❷3:1		1	Tank-Hydraulic
3:1:1	103-1948	1	Cap-Reservoir, HYD
3:1:2	103-1949	1	Gasket-Cap
3:2	107-2131	1	Decal-Surface, Hot
4	108-5352-03	1	Bracket-Tank, Hydraulic
6	103-1988	4	Clamp-Hose
7	32128-20	11	Nut-HF
8	107-3462-03	1	Bracket-Pump, Front
9	107-9885	1	Tandem Pump ASM
10	110-0824	4	R-Clamp
11	322-5	4	Screw-HH
12	110-0812	1	Cooler-Oil, Hydro
13	3256-23	6	Washer-Flat
14	322-3	8	Screw-HH
15	3230-23	3	Screw-CARR
16	108-5367-03	1	Plate-Shield, Pump
17	3256-24	2	Washer-Flat

Ref	Part No.	Qty.	Description
18	103-2153	1	Fitting-90 DEG
18:1	1-603920	1	O-Ring
18:2	1-603992	1	O-Ring
19	100-4887	2	Fitting-Barb
19:1	237-42	1	O-Ring
20	323-8	2	Screw-HH
21	3290-357	2	Nut-HHF, Whiz
22	86-9080	1	Head-Filter
23	67-8110	1	Cartridge-Filter, Oil
24	1-805004	2	Washer-Lock
25	321-3	2	Screw-HH
27	107-9886	1	Motor-Wheel, Cw
27:1	3257-42	1	Key-Woodruff
27:2	1-809036	1	Nut-HH
28	108-5917	1	Motor-Wheel, Ccw
28:1	3257-42	1	Key-Woodruff
28:2	1-809036	1	Nut-HH
29	3296-29	4	Nut-Lock, NI
30	1-603990	4	Fitting-Straight
30:1	1-603920	1	O-Ring
30:2	1-603992	1	O-Ring
31	2412-82	1	Clamp
32	108-5316	1	Fitting-Elbow, 90 DEG
32:1	237-79	1	O-Ring

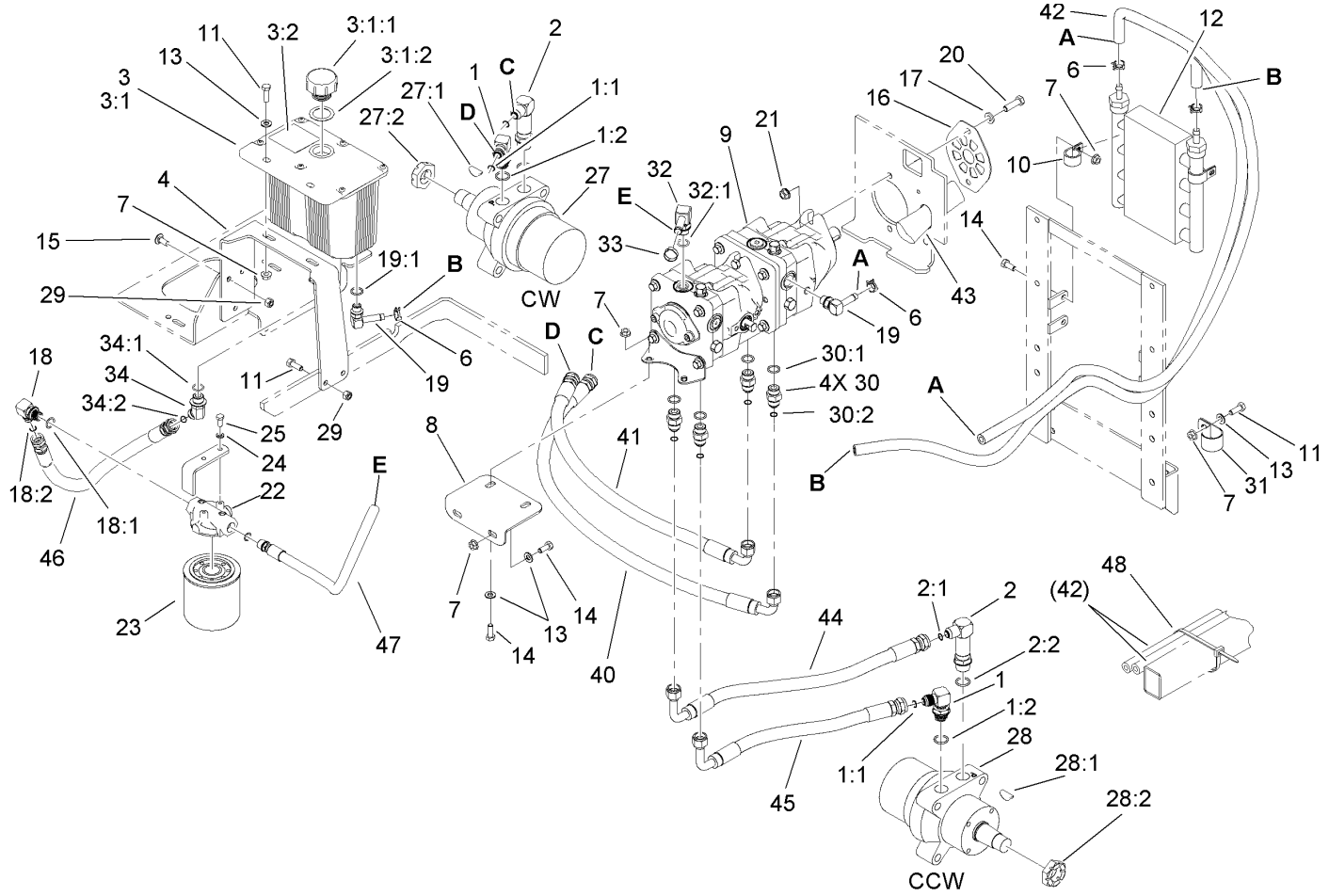

Hydraulic Tank, Motor and Pump Assembly (continued)

Ref	Part No.	Qty.	Description
33	103-2104	1	Clamp-Hose
34	1-523221	1	Fitting-HYD, 45 DEG
34:1	1-603920	1	O-Ring
34:2	1-603992	1	O-Ring
40	107-3495	1	Hydraulic Hose ASM
41	107-3490	1	Hydraulic Hose ASM
42	107-3492	2	Hose-Hydraulic
43	108-5377	1	Sleeve-Fabric
44	108-5318	1	Hydraulic Hose ASM
45	107-3491	1	Hydraulic Hose ASM
46	110-3854	1	Hydraulic Hose ASM
47	108-5374	1	Hydraulic Hose ASM
48	1-303335	1	Tie-Plastic

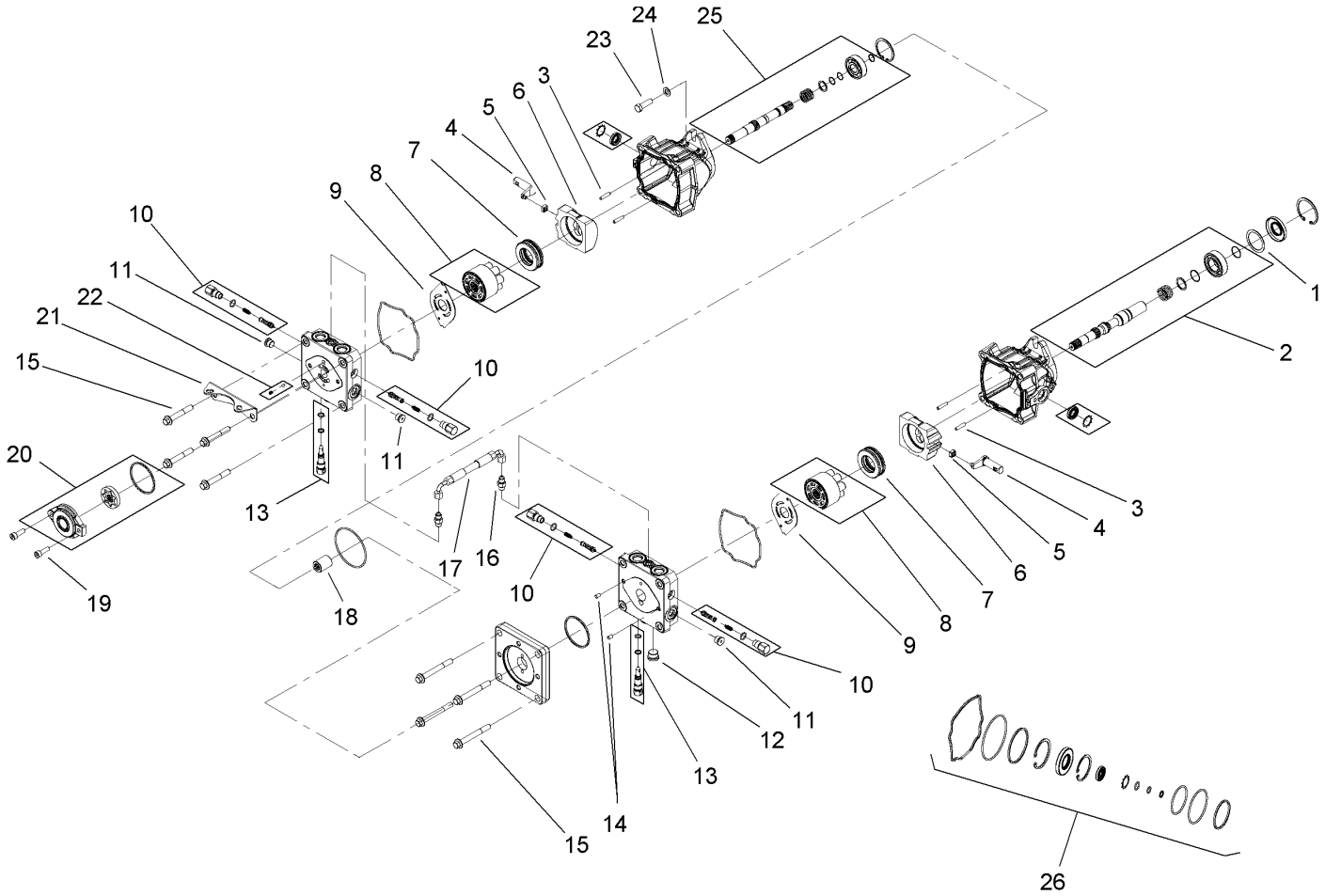

Tandem Pump Assembly No. 107-9885

Ref	Part No.	Qty.	Description
1	112-4168	1	Spacer
2	112-4151	1	Input Pump Shaft Kit
3	106-8753	4	Pin-Headless, Straight
4	112-4152	2	Arm-Trunnion
5	94-1910	2	Guide-Slot
6	112-4153	2	Swashplate
7	112-4154	2	Bearing-Thrust
8	108-2112	2	Cylinder Block Kit
9	108-6801	2	Plate-Valve
10	112-4155	4	Shock Valve Kit
11	104-2189	3	Plug-Thread, Straight
12	112-4156	1	Plug-Steel
13	106-8759	2	Bypass Valve Kit
14	104-2170	2	Pin
15	112-4157	8	Bolt
16	112-4158	2	Fitting-Straight
17	112-4159	1	Hose ASM
18	112-4160	1	Coupling
19	112-4161	2	Bolt
20	112-4162	1	Charge Pump Kit
21	112-4163	1	Bracket-Support, Pump
22	112-4164	1	Charge Relief Kit
23	112-4165	2	Bolt-HSH
24	112-4166	2	Washer

Ref	Part No.	Qty.	Description
25	112-4167	1	Second Pump Shaft Kit
26	112-4150	1	Overhaul Seal Kit

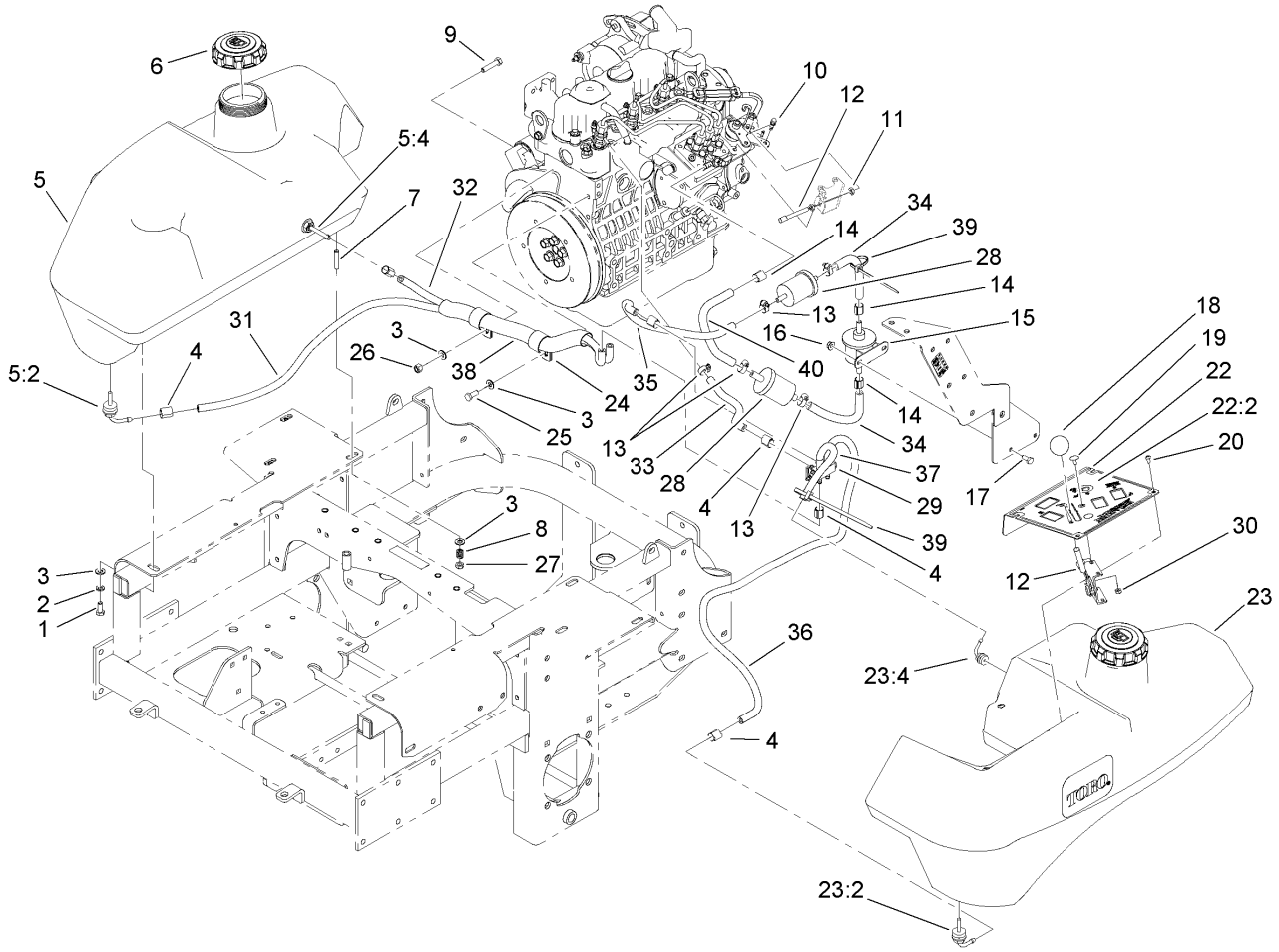

Throttle, Control Panel and Fuel Tank Assembly

Ref	Part No.	Qty.	Description
1	322-3	2	Screw-HH
2	1-805005	2	Washer-Lock
3	3256-23	11	Washer-Flat
4	1-643293	8	Clamp-Hose, Fuel
5	108-5361	1	RH Fuel Tank ASM
5:2	103-2605	1	Fitting-Fuel, Bulkhead
5:4	103-2615	1	Fitting-Fuel, Bulkhead
6	110-0897	2	Cap-Fuel, Diesel
7	1-633023	6	Stud
8	1-633349	6	Spring-Tank, Fuel
9	322-7	1	Screw-HH
10	108-5928	1	Swivel-Stop, Cable
11	3220-1	2	Nut-Jam
12	108-5927	1	Cable-Control, Throttle
13	2412-108	7	Clamp-Worm
14	1-643277	3	Clamp-Hose, Fuel
15	107-0122	1	Pump-Fuel, Electric
16	32128-33	2	Nut-HF
17	321-3	2	Screw-HH
18	1-603175	1	Knob-Ball
19	1-807513	2	Bolt-CARR
20	109-2661	4	Screw-PPH
22	112-2388	1	Control Panel ASM
22:2	112-2389	1	Decal-Panel, Control

Ref	Part No.	Qty.	Description
23	108-5362	1	LH Fuel Tank ASM
23:2	103-2605	1	Fitting-Fuel, Bulkhead
23:4	103-2615	1	Fitting-Fuel, Bulkhead
24	1-643312	2	Clip-Loom
25	33114-020	1	Screw-HH
26	3296-29	1	Nut-Lock, NI
27	3296-47	6	Nut-Lock, NI
28	98-7612	2	Filter-Fuel
29	1-643234	1	Valve-Fuel, Dual Flow
30	3296-2	2	Nut-Lock
31	108-5376	1	Hose-Fuel
32	109-0301	1	Hose-Fuel
33	110-1876	1	Hose-Fuel
34	112-2386	2	Hose-Fuel
35	109-0282	1	Hose-Fuel
36	109-0275	1	Hose-Fuel
37	109-0297	1	Hose-Fuel
38	108-5377	1	Sleeve-Fabric
39	1-303335	2	Tie-Plastic
40	110-4170	1	Hose-Fuel

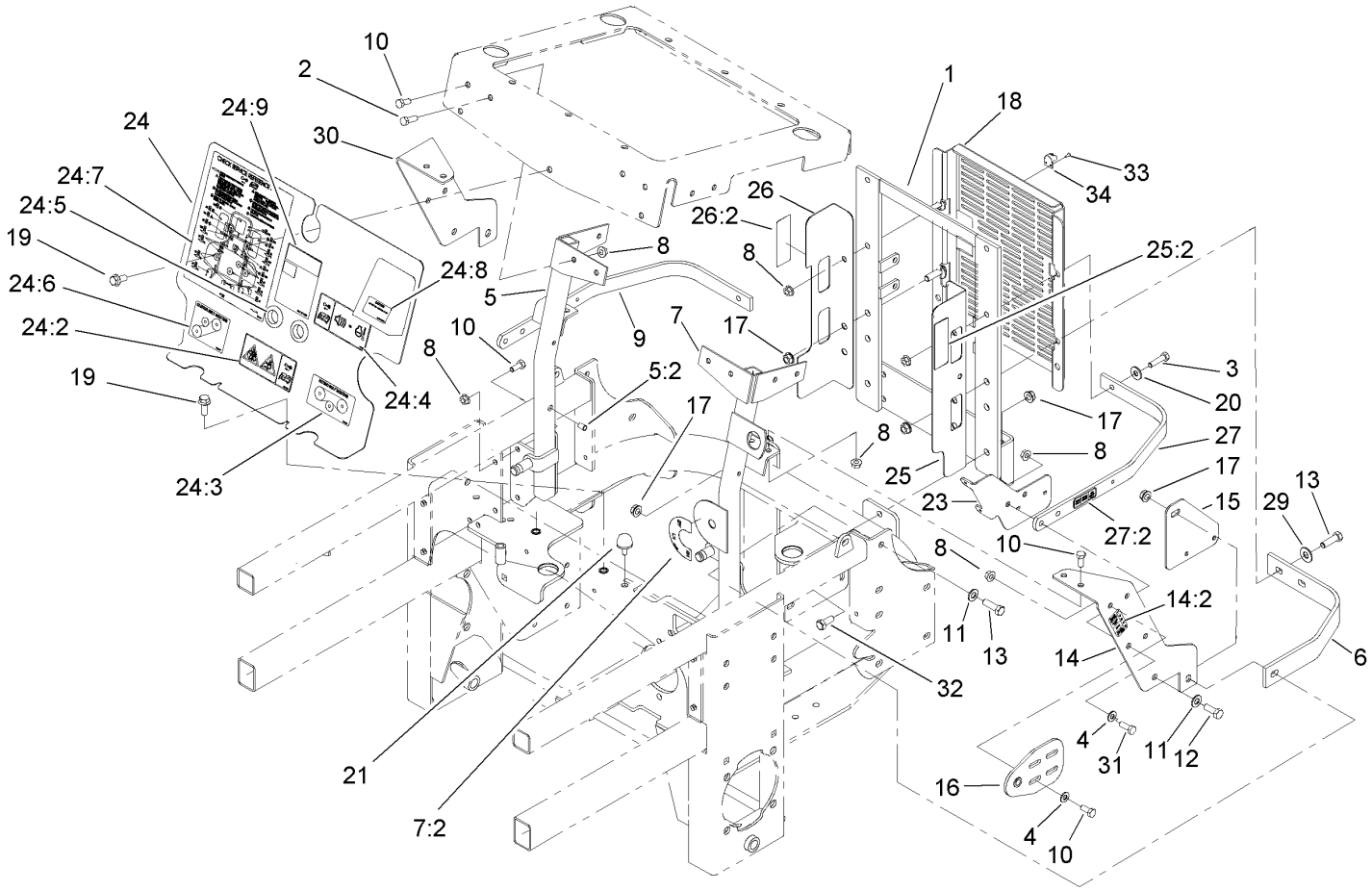

Engine Housing Assembly

Ref	Part No.	Qty.	Description
1	107-9934-03	1	Support-Radiator, Rear
2	322-5	2	Screw-HH
3	322-6	2	Screw-HH
4	3256-23	8	Washer-Flat
5	114-1170	1	RH Radiator Brace ASM
5:2	32148-11	1	Insert-Threaded
6	103-7623-03	2	Strap-Guard
7	110-3870	1	LH Radiator Brace ASM
7:2	107-2114	1	Decal-Valve, Fuel
8	32128-20	22	Nut-HF
9	1-633897-03	1	Rib-Top
10	322-3	14	Screw-HH
11	3256-24	4	Washer-Flat
12	323-6	2	Screw-HH
13	323-7	4	Screw-HH
14	112-8318	1	LH Support Bracket ASM
14:2	112-8319	1	Decal-Fuses
15	108-5349-03	1	Bracket-Pump, Fuel
16	108-5345-03	2	Hood Pivot Plate ASM
17	3290-357	8	Nut-HHF, Whiz
18	112-8302-03	1	Shield-Cooler
19	3234-33	3	Screw-HHF
20	3256-3	2	Washer-Flat
21	109-2365	2	Bumper-Rubber (W/Stud)

Ref	Part No.	Qty.	Description
23	107-8081-03	1	Bracket-Relay/Fuse
24	108-5936	1	Front Engine Shield ASM
24:2	110-3853	1	Decal-Danger, Rotating Devices
24:3	108-5955	1	Decal-Routing, Hydro Belt
24:4	110-3852	1	Decal-Buzzer, Warning
24:5	100-3815	2	Grommet-Rubber
24:6	108-5957	1	Decal-Routing, Clutch Belt
24:7	110-3851	1	Decal-Check, Service
24:8	110-0806	1	Decal-Caution
24:9	104-2449	1	Decal-Coolant
25	110-0879	1	Guard-Fan, LH (Ce)
25:2	107-7719	1	Decal-Danger, Rotating Devices
26	110-0888	1	Guard-Fan, RH (Ce)
26:2	107-7719	1	Decal-Danger, Rotating Devices
27	110-0890	1	Strap-Top
27:2	110-0305	1	Decal-Relay
29	3256-4	2	Washer-Flat
30	108-5339-03	1	Bracket-Support, RH
31	322-4	4	Screw-HH
32	323-5	2	Screw-HH
33	923786	2	Rivet
34	1-643189	1	Keeper-Latch, Rubber

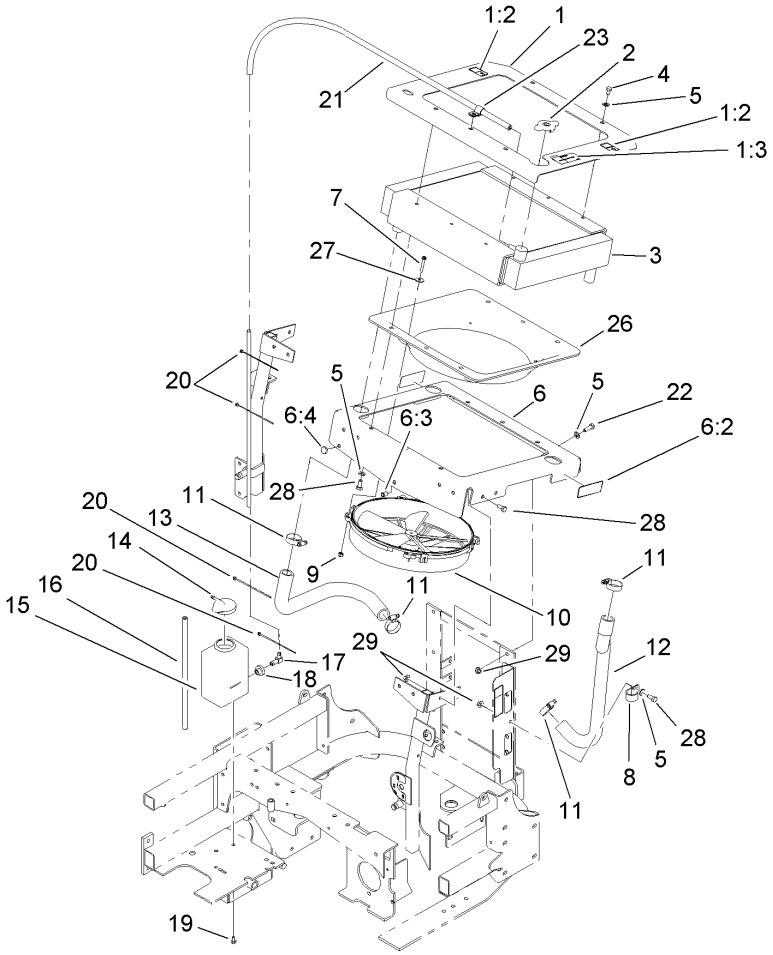

Cooling System Assembly

Ref	Part No.	Qty.	Description
1	110-3845	1	Top Radiator Plate ASM
1:2	93-8069	2	Decal-Surface, Hot
1:3	110-3842	1	Decal-Antifreeze
2	1-643161	1	Cap-Radiator
3	107-9932	1	Radiator
4	322-1	6	Screw-HH
5	3256-23	16	Washer-Flat
6	110-0880	1	Bottom Radiator Plate ASM (Ce)
6:2	107-7719	2	Decal-Danger, Rotating Devices
6:3	32148-6	1	Insert-Nut
6:4	1-513658	2	Bumper
7	1-803067	4	Screw
8	1-643312	1	Clip-Loom
9	1-804254	4	Nut
10	1-633831	1	Fan
11	1-633989	4	Clamp-Hose
12	108-5372	1	Hose-Radiator, Left
13	108-5904	1	Hose-Outlet, Engine
14	1-643164	1	Cap-Tank, Overflow
15	1-643163	1	Tank-Overflow
16	1-603954	1	Hose-Line, Fuel
17	1-643259	1	Fitting-Elbow
18	1-513645	1	Bushing-Valve, Fuel
19	321-2	2	Screw-HH

Ref	Part No.	Qty.	Description
20	1-303287	5	Tie-Plastic
21	103-1428	1	Hose-Overflow
22	322-5	3	Screw-HH
23	1-603727	1	Clip-Loom
26	108-5971	1	Shroud-Cooling, Engine
27	3256-67	4	Washer-Flat
28	322-3	11	Screw-HH
29	32128-20	4	Nut-HF

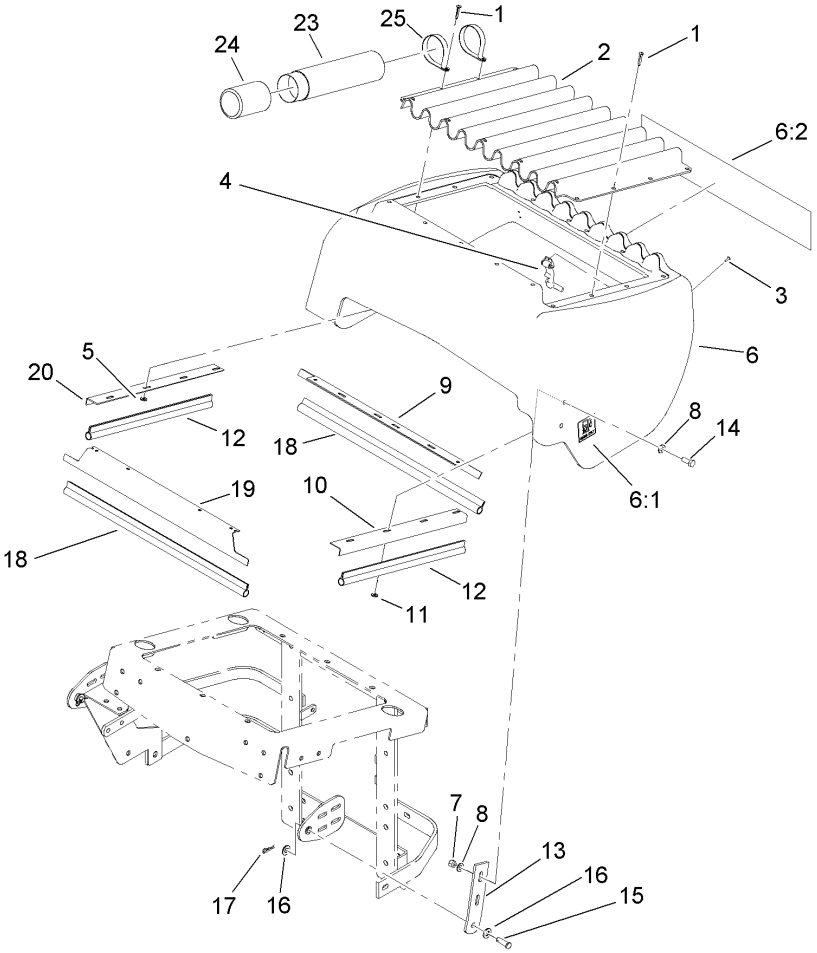

Hood Assembly

Ref	Part No.	Qty.	Description
1	1-803072	17	Rivet
2	1-633864-03	1	Screen-Radiator
3	923786	2	Rivet
4	1-643188	1	Latch-Rubber
5	1-303435	4	Washer-Spring
6	112-8304	1	Hood ASM
6:1	103-1636	2	Decal-Fuel
6:2	107-7674	1	Decal
7	3296-29	4	Nut-Lock, NI
8	3256-23	8	Washer-Flat
9	1-643108-03	1	Angle-Radiator, Bottom
10	1-643105-03	1	Angle-Radiator, LH
11	3256-14	12	Washer-Flat
12	1-643186	2	Seal-Trim
13	108-5337-03	2	Plate-Hinge, Hood
14	322-4	4	Screw-HH
15	1-808285	2	Pin-Clevis
16	3256-24	4	Washer-Flat
17	1-806003	2	Pin-Hair
18	1-643187	2	Seal-Trim
19	1-643107-03	1	Angle-Radiator, Top
20	1-643106-03	1	Angle-Radiator, RH
23	104-7050	1	Housing-Manual
24	104-7048	1	Cap-Housing

Ref	Part No.	Qty.	Description
25	2412-120	2	R-Clamp

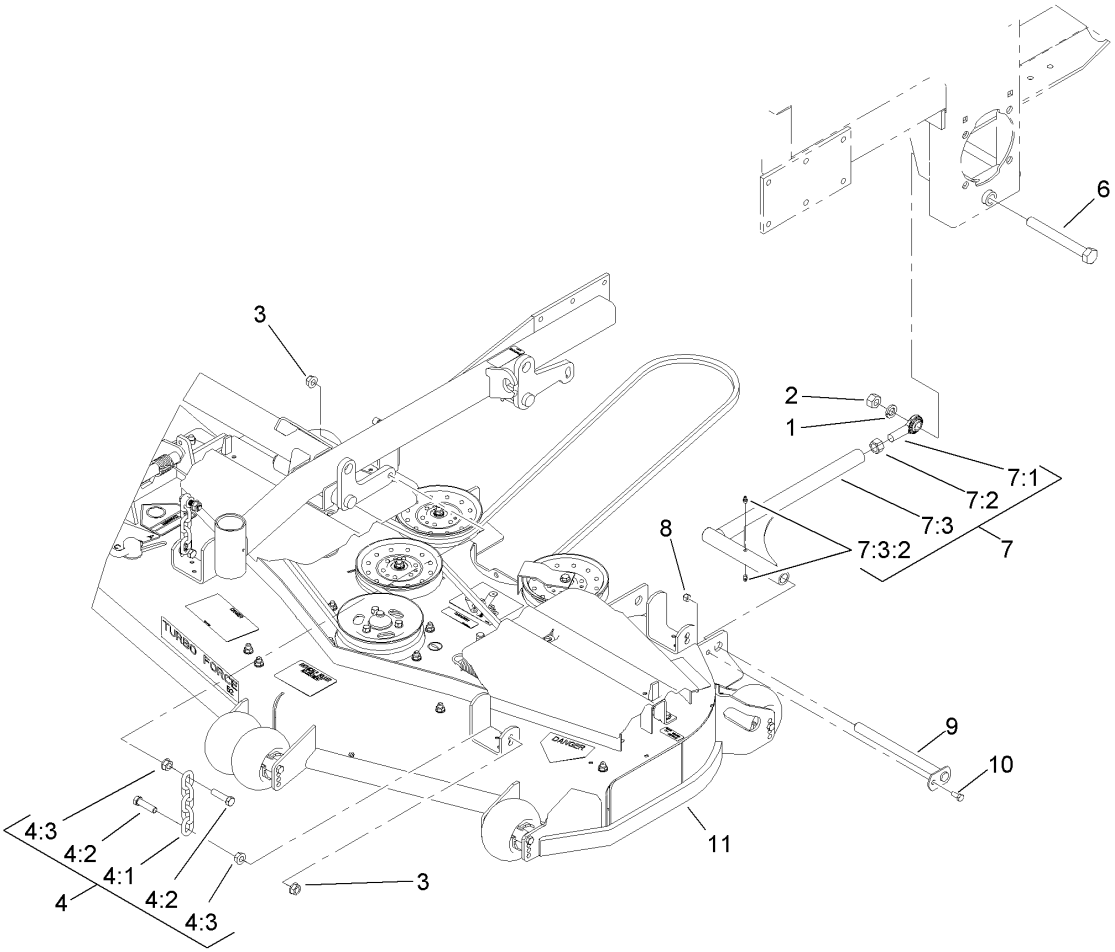

Deck Connection Assembly

Ref	Part No.	Qty.	Description
1	3253-8	2	Washer-Lock
2	3217-11	2	Nut-Hex
3	32128-37	8	Nut-HF
4	103-9792	4	Deck Chain ASM
4:1	1-633447	1	Chain-Lift, Deck
4:2	103-1898	2	Screw-HH
4:3	32128-37	2	Nut-HF
6	327-28	2	Screw-HH
7	108-5969	2	Strut ASM
7:1	1-633029	1	Balljoint-Spherical
7:2	3219-6	1	Nut-Hex
❷7:3		1	Strut-Deck
7:3:2	109-1380	2	Fitting-Grease
8	3296-29	2	Nut-Lock, NI
9	1-632199-01	2	Pin-Strut
10	322-3	2	Screw-HH
❷11		1	Deck ASM

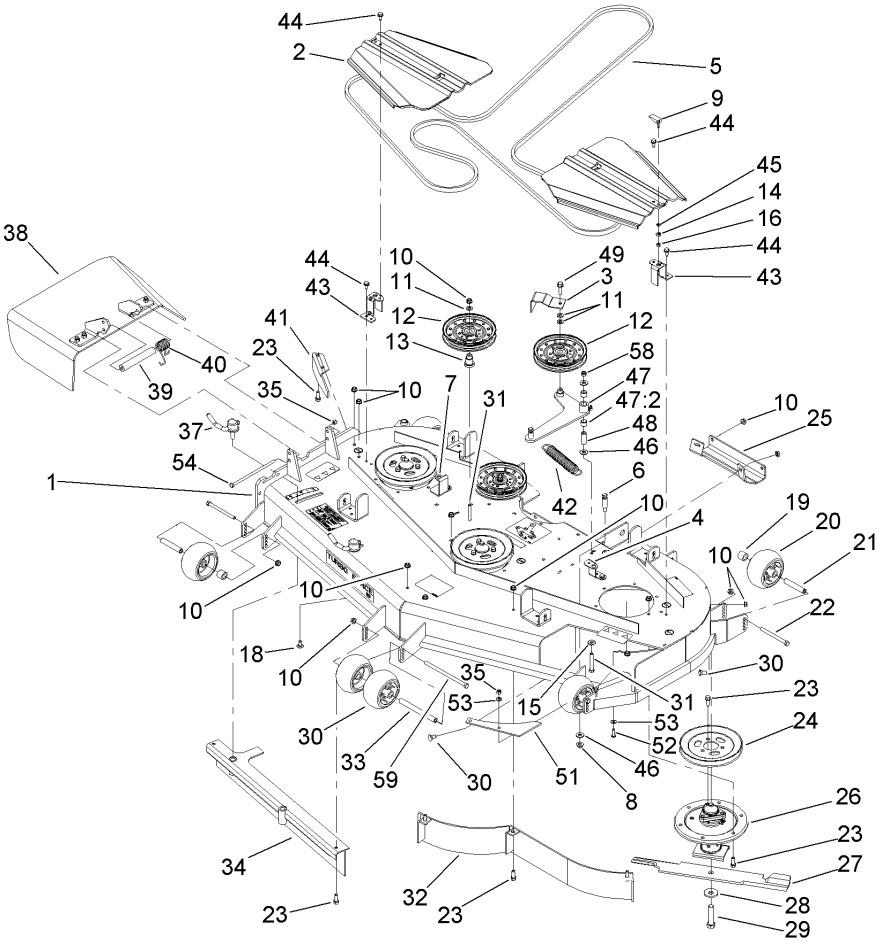

Deck Assembly

Ref	Part No.	Qty.	Description
1	108-5944	1	Deck Decal ASM
2	107-8536	2	Cover-Belt
3	108-7220-01	1	Guide-Belt
4	108-2177-01	1	Bracket-Cover, Tall
5	108-5915	1	Belt-V
6	110-0801	1	Pin-Threaded, Spring Anchor
7	108-4122-01	1	Bracket-Cover
8	32128-19	1	Nut-HF
9	106-6777	2	Handle-Latch, Swell
10	3290-357	42	Nut-HHF, Whiz
11	3256-24	4	Washer-Flat
12	1-633109	3	Idler-Flat
13	106-3214	2	Mount-Pulley
14	106-6778	2	Bushing-Latch, Swell
15	98-5975	1	Washer-Belleville
16	1-804254	2	Nut
18	3231-21	1	Screw-CARR
19	98-7913	4	Tube-Spacer
20	1-603299	6	Roller-Scalp, Anti
21	98-7912	4	Tube-Spanner
22	323-23	4	Screw-HH
23	92-1624	33	Screw
24	107-7678	3	Pulley
25	105-8792-01	1	Plate-Skid

Ref	Part No.	Qty.	Description
26	108-7713	3	Spindle ASM
27	105-7718-03	3	Blade-Hi Flow
28	103-0865	3	Washer-Blade Bolt, Heavy
29	103-0862	3	Screw-Cap
30	3231-1	10	Screw-CARR
31	323-12	3	Screw-HH
32	105-7657-01	1	Baffle ASM
33	98-5967	1	Spacer-Wheel
34	105-7669-01	1	Baffle ASM
35	3296-29	3	Nut-Lock, NI
37	107-1664	2	Lever ASM
38	108-2792	1	Rubber Deflector ASM
39	105-4622	1	Spacer
40	108-4052	1	Spring-Torsion
41	106-3216-01	1	Baffle-Discharge
42	110-0818	1	Spring-Extension
43	108-4121-01	2	Bracket-Cover
44	32144-70	6	Screw-HWHTF
45	99-3058	2	Washer
46	3256-4	3	Washer-Flat
47	108-5949	1	Deck Idler Arm ASM
47:2	103-4681	2	Sleeve-Bearing
48	1-603044	1	Bushing
49	3234-24	1	Screw-HHF

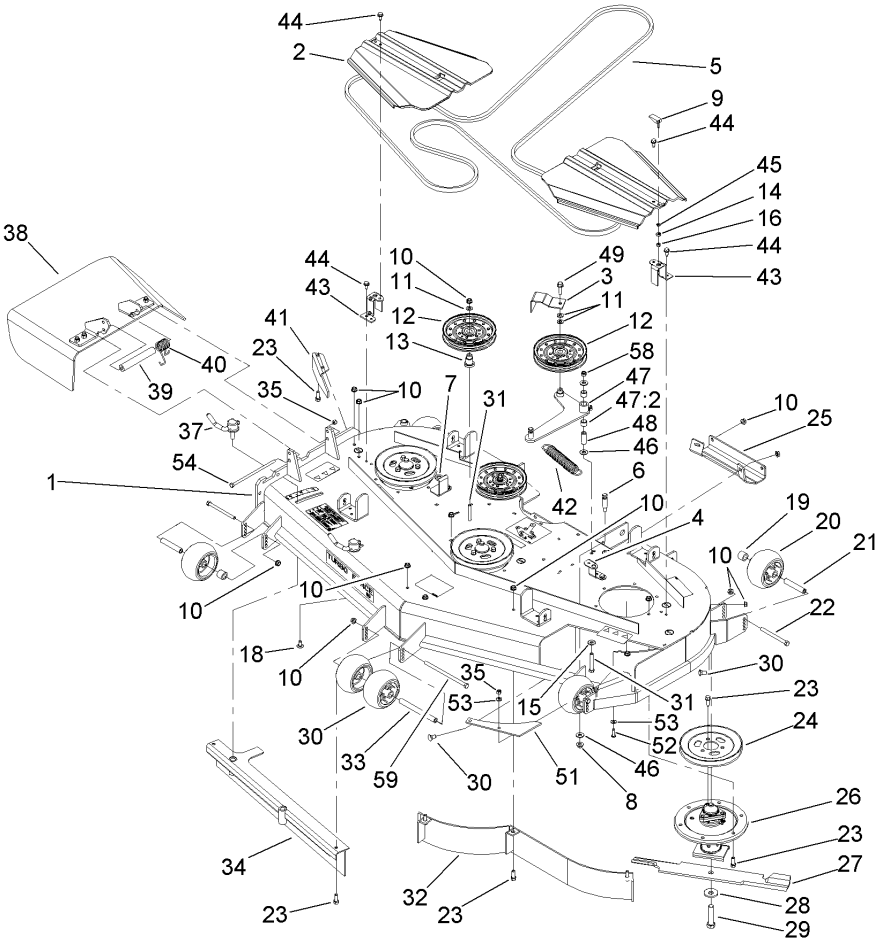

Deck Assembly (continued)

Ref	Part No.	Qty.	Description
51	107-3137	1	Plate-Turbo
52	3274-104	2	Screw-HSBH
53	1-303334	4	Washer-Spring
54	322-50	1	Screw-HH
58	3296-39	1	Nut-Lock, NI
59	323-28	1	Screw-HH

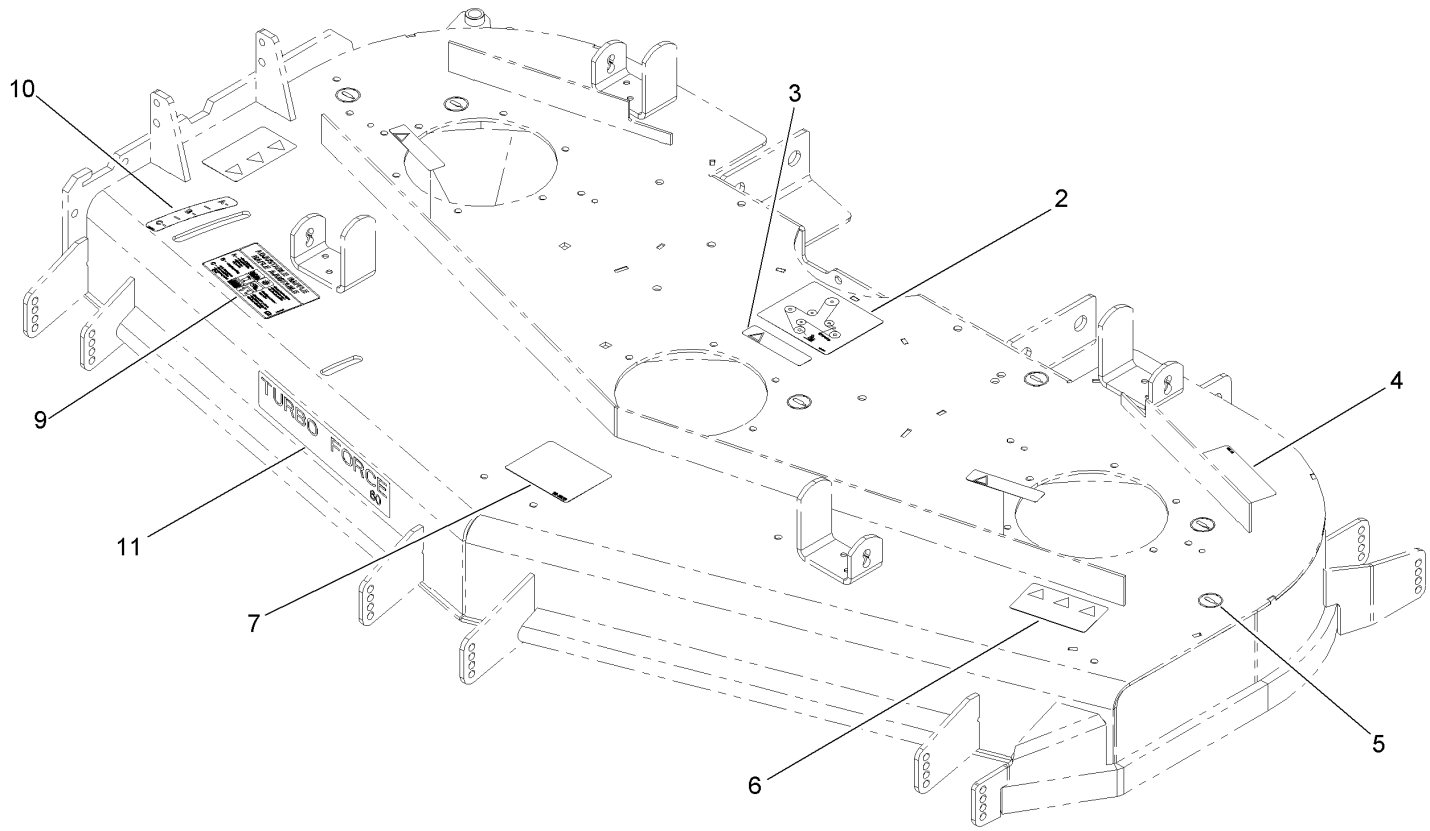

Deck Decal Assembly No. 108-5944

Ref	Part No.	Qty.	Description
2	108-5981	1	Decal-Routing, Belt
3	98-1977	3	Decal-Warning
4	93-7818	1	Decal-Torque, Blade Bolt
5	58-6520	6	Decal-Grease
6	93-7010	2	Decal-Danger
7	99-8939	1	Decal-Anti Scalp
9	110-2068	1	Decal-Adjustment, Baffle
10	110-2067	1	Decal-Setting, Baffle
11	107-1619	1	Decal

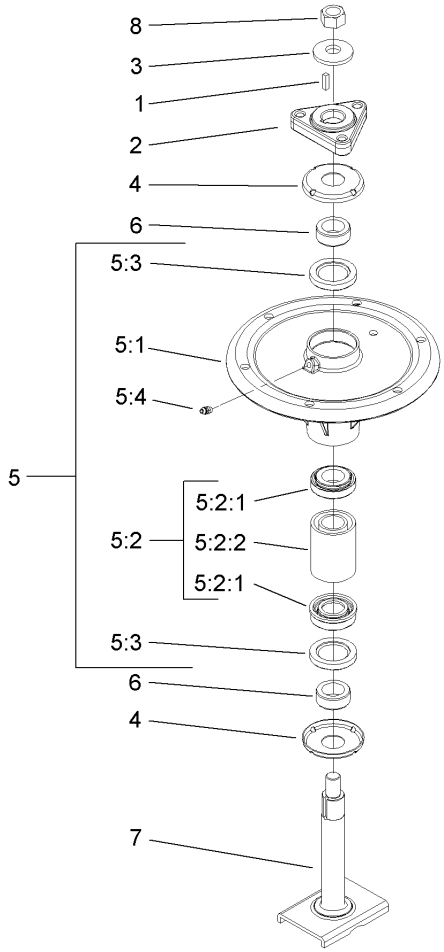

Spindle Assembly No. 108-7713

Ref	Part No.	Qty.	Description
1	10-8040	1	Key-Square
2	106-3277	1	Hub-Pulley
3	103-0865	1	Washer-Blade Bolt, Heavy
4	106-3204	2	Shield-Bearing
❷5		1	Spindle Bearing ASM
5:1	106-3211	1	Housing-Spindle
5:2	108-7711	1	Bearing ASM
5:2:1	108-7710	1	Bearing ASM
5:2:2	106-3206	1	Spacer (Matched Set)
5:3	253-133	2	Seal-Oil
5:4	302-5	1	Fitting-Grease
6	106-3218	2	Spacer-Seal
7	106-3233	1	Spindle Shaft ASM
8	3219-6	1	Nut-Hex

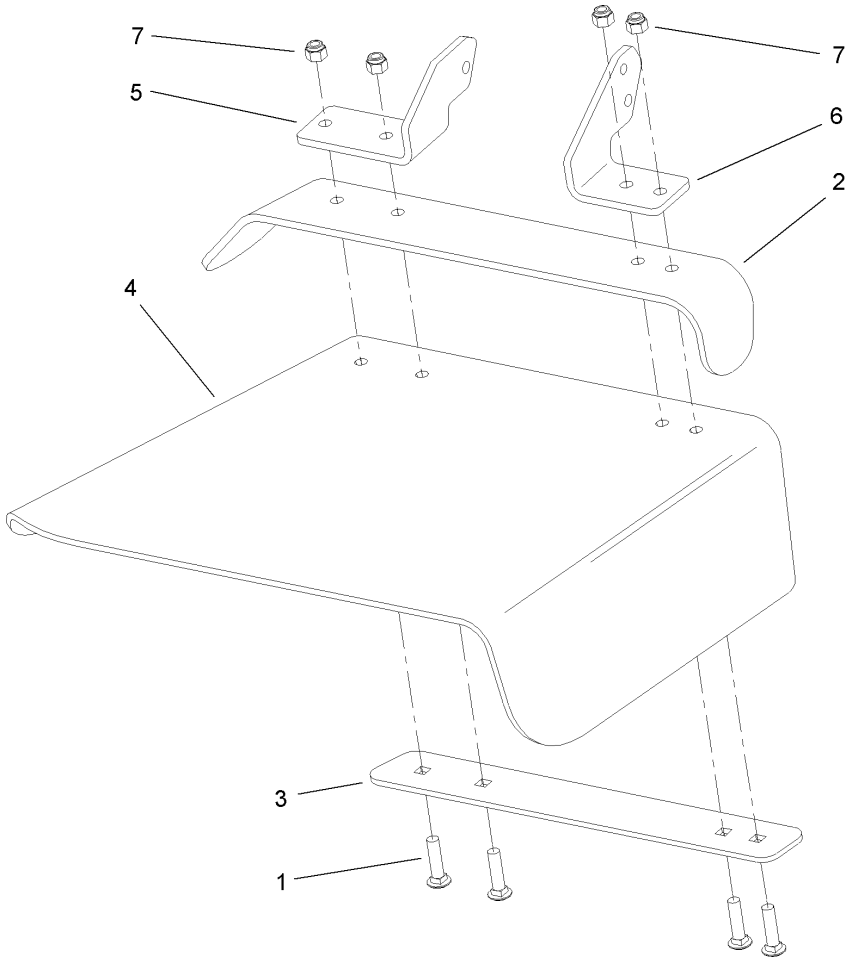

Rubber Deflector Assembly No. 108-2792

Ref	Part No.	Qty.	Description
1	3231-4	4	Screw-CARR
2	106-3246-01	1	Deflector
3	106-3248-03	1	Strap-Discharge
4	108-5029	1	Deflector-Rubber
5	108-4059-01	1	Plate-Hinge, Rear
6	106-3253-01	1	Plate-Hinge, Front
7	3296-39	4	Nut-Lock, NI

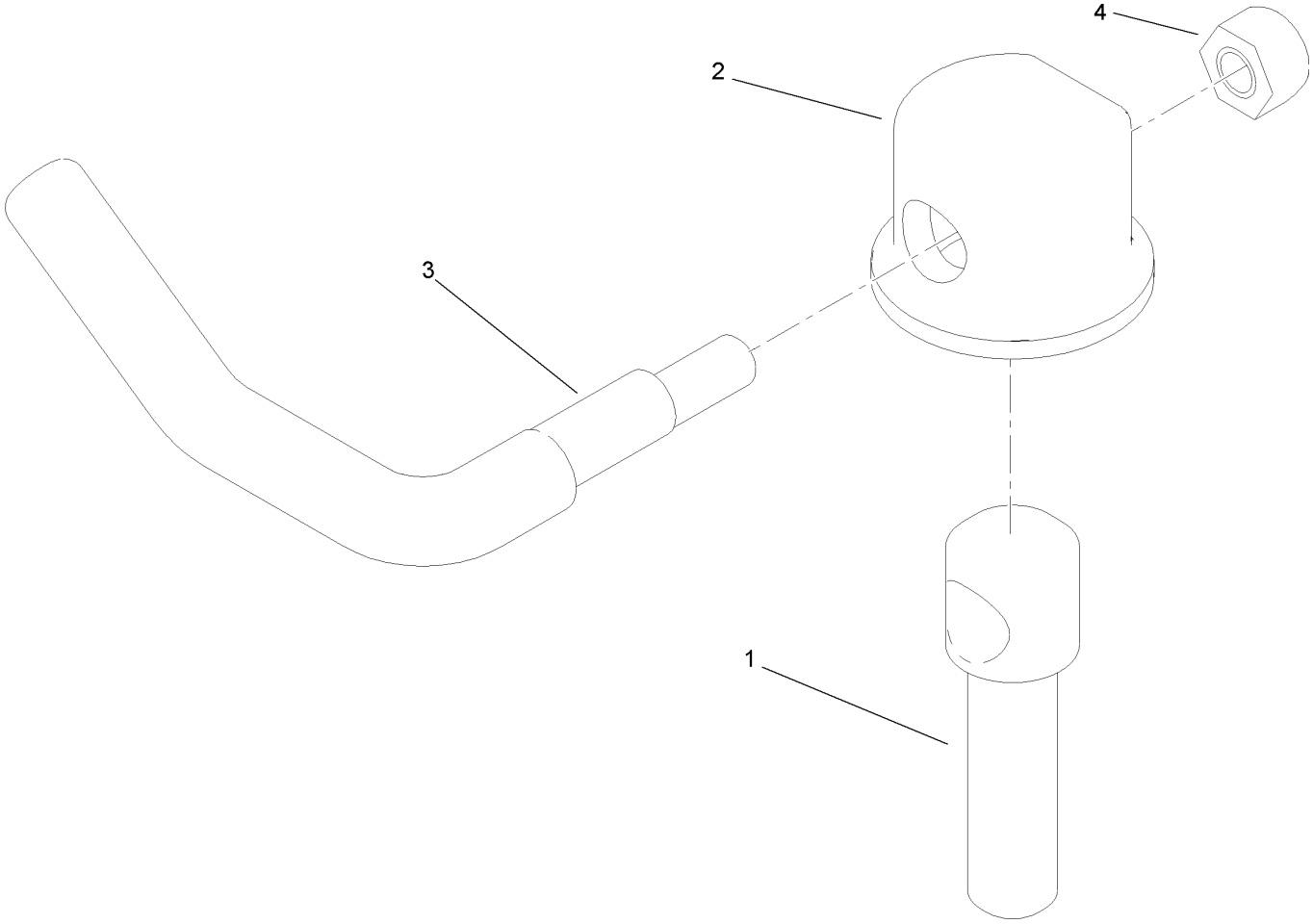

Lever Assembly No. 107-1664

Ref	Part No.	Qty.	Description
1	106-3239	1	Screw-Lock
2	107-1644	1	Cap-Lock
3	106-3241	1	Lever-Lock
4	3296-29	1	Nut-Lock, NI

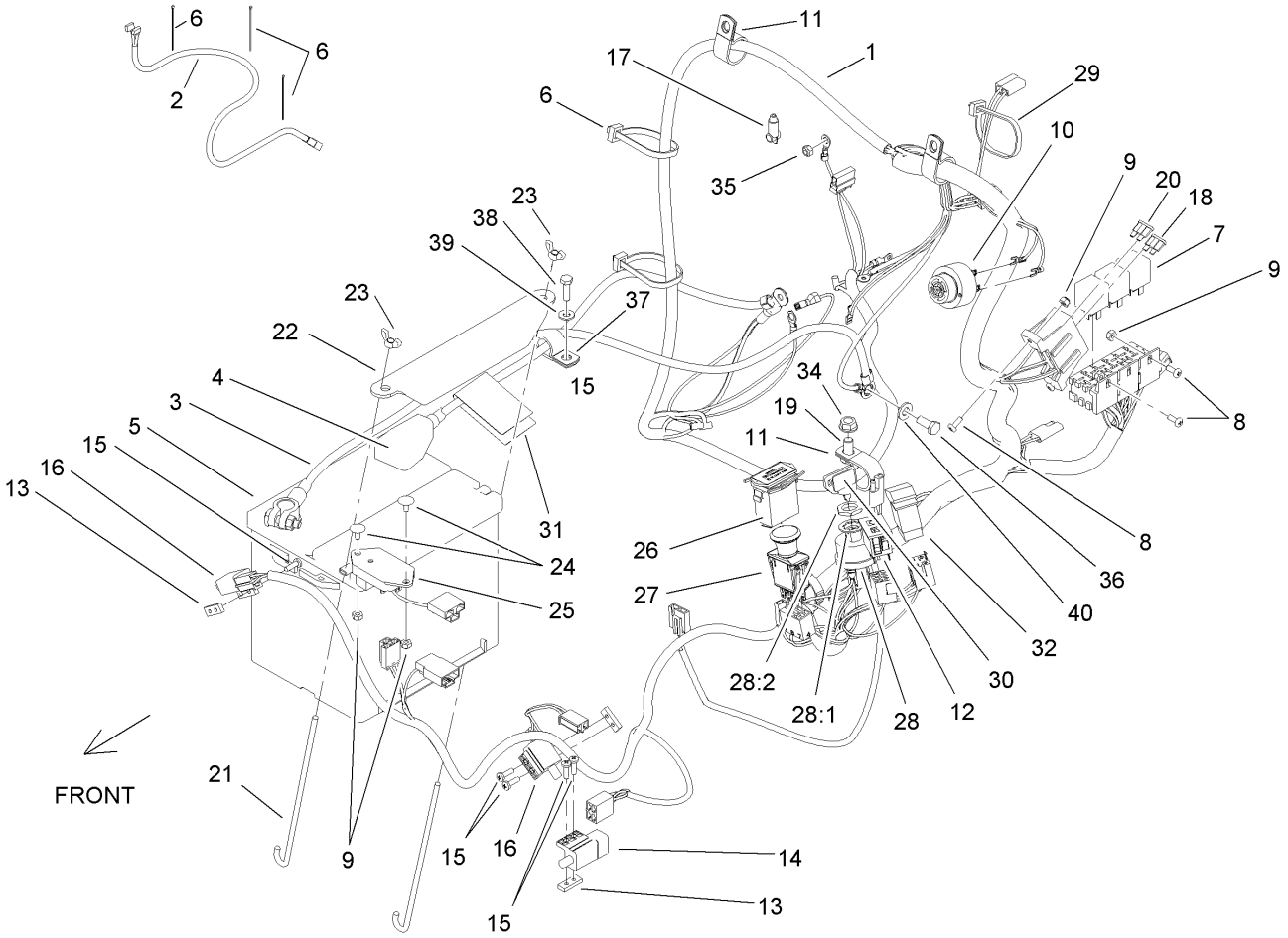

Electrical Assembly

Ref	Part No.	Qty.	Description
1	112-8315	1	Harness-Electrical, Main
2	103-1227	1	Harness-Wiring, Seat
3	110-0303	1	Cable-Battery, Negative
4	110-0304	1	Cable-Battery, Positive
5	106-5187	1	Battery
6	1-303335	7	Tie-Plastic
7	1-643275	3	Relay
8	1-803071	4	Screw
9	3296-2	6	Nut-Lock
10	103-0205	1	Alarm-Tone, Dual
11	1-643312	3	Clip-Loom
12	100-8071	1	Lamp-Warning
13	1-633181	3	Plate-Tapped
14	1-633111	1	Switch
15	3290-500	6	Screw-PPH
16	1-513051	2	Switch-Open, Normally
17	1-643178	1	Cap-Insulator, Red
18	103-1368	1	Fuse-40 Amp
19	323-4	1	Screw-HH
20	109103	1	Fuse-30 Amp
21	103-1312	2	Bolt-Holddown
22	103-1311-03	1	Holddown-Battery
23	1-543792	2	Wingnut
24	1-807513	2	Bolt-CARR

Ref	Part No.	Qty.	Description
25	103-5218	1	Module-Delay, Seat
26	1-513374	1	Meter-Hour
27	103-5221	1	Switch-PTO
28	104-2541	1	Switch-Key
28:1	218-461	1	Nut-HH
28:2	3254-5	1	Washer-Tooth
29	1-303287	1	Tie-Plastic
30	63-8360	2	Key-Ignition
31	107-9309	1	Decal-Instructions, Charging
32	110-0811	1	Switch-Rocker
34	3290-357	1	Nut-HHF, Whiz
35	33023-00	1	Nut-Lock
36	33114-016	1	Screw-HH
37	1-633396	2	Clip-Loom
38	321-5	2	Screw-HH
39	3256-22	2	Washer-Flat
40	3256-23	1	Washer-Flat

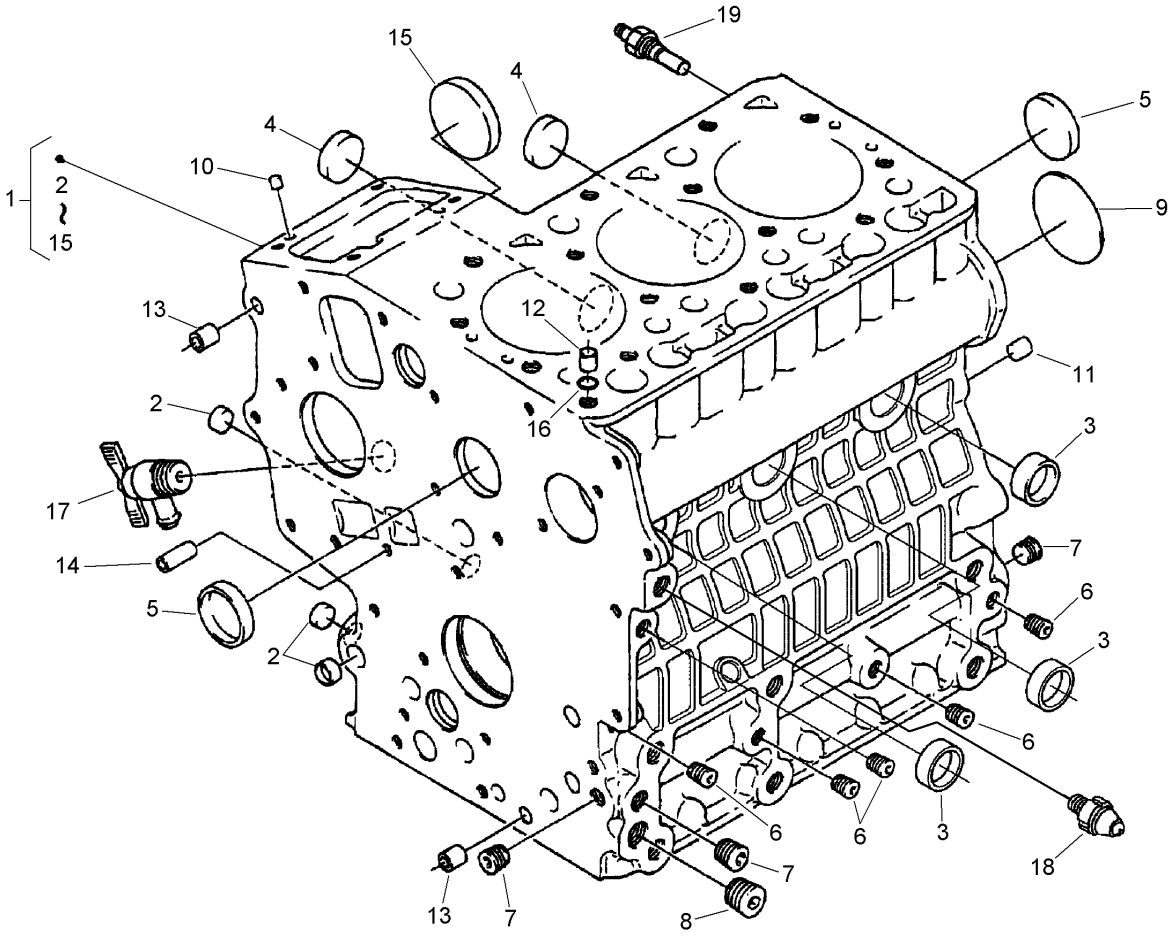

Crankcase Assembly

Ref	Part No.	Qty.	Description
1	112-8324	1	Crankcase
2	100-2019	3	Cap-Sealing
3	100-2020	3	Cap-Sealing
4	110-3702	2	Cap-Sealing
5	98-9398	2	Cap-Sealing
6	98-7540	5	Plug
7	98-7487	3	Plug
8	98-7488	1	Plug
9	100-1851	1	Plug
10	98-9375	2	Pin-Straight
11	98-9377	2	Pin-Straight
12	98-7506	1	Pin-Pipe
13	98-9387	2	Pin-Pipe
14	100-2051	2	Pin-Pipe
15	100-1991	1	Cover-Fuel, Camshaft
16	98-7509	1	O-Ring
17	98-9436	1	Drain Cock ASM
18	100-2230	1	Switch-Oil
19	99-3582	1	Thermoswitch

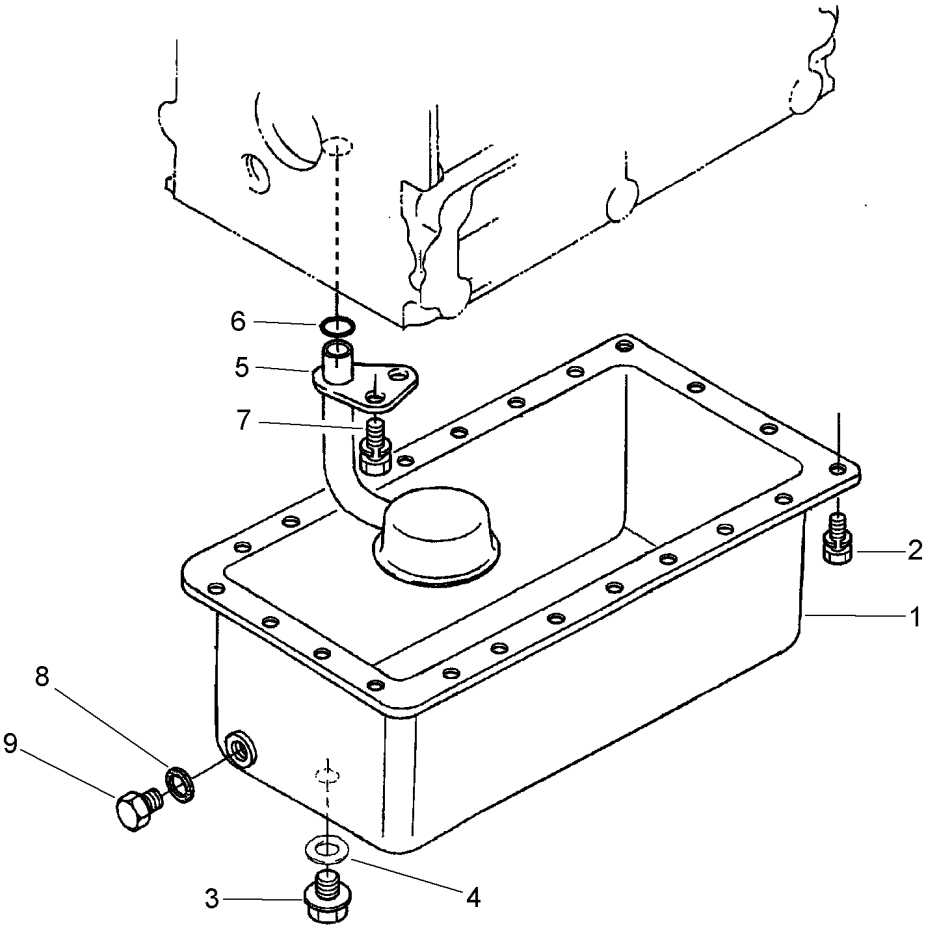

Oil Pan Assembly

Ref	Part No.	Qty.	Description
1	110-3703	1	Oil Pan ASM
2	98-9351	22	Bolt
3	98-7523	1	Plug-Drain
4	98-9399	1	Gasket
5	100-2001	1	Strainer-Oil, Pick-Up
6	100-2205	1	O-Ring
7	100-9195	1	Bolt
8	110-3704	1	Gasket
9	108-6572	1	Plug-Drain

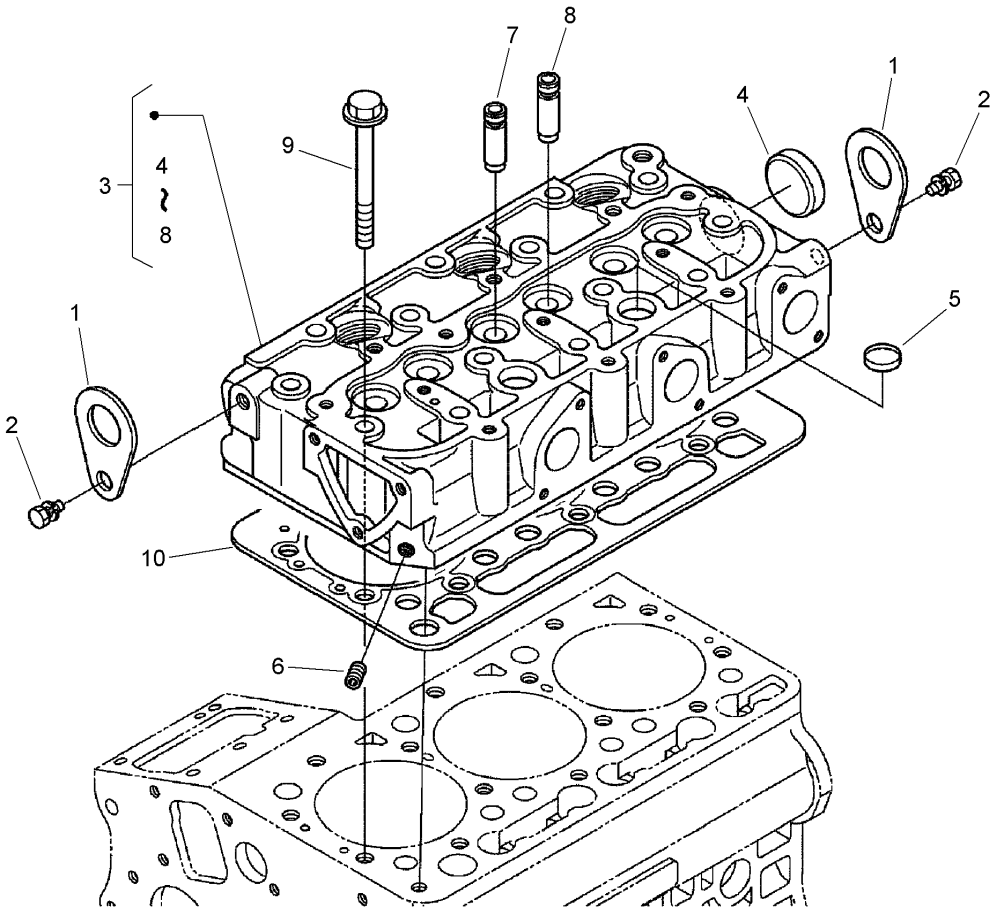

Cylinder Head Assembly

Ref	Part No.	Qty.	Description
1	98-7531	2	Hook-Engine
2	98-7526	2	Bolt
3	110-3705	1	Head-Cylinder
4	98-9395	1	Cap-Sealing
5	98-9389	2	Cap-Sealing
6	98-7540	1	Plug
7	100-1882	3	Guide-Valve, Inlet
8	100-1883	3	Guide-Valve, Exhaust
9	100-1820	14	Bolt-Head, Cylinder
10	110-3706	1	Gasket-Head, Cylinder

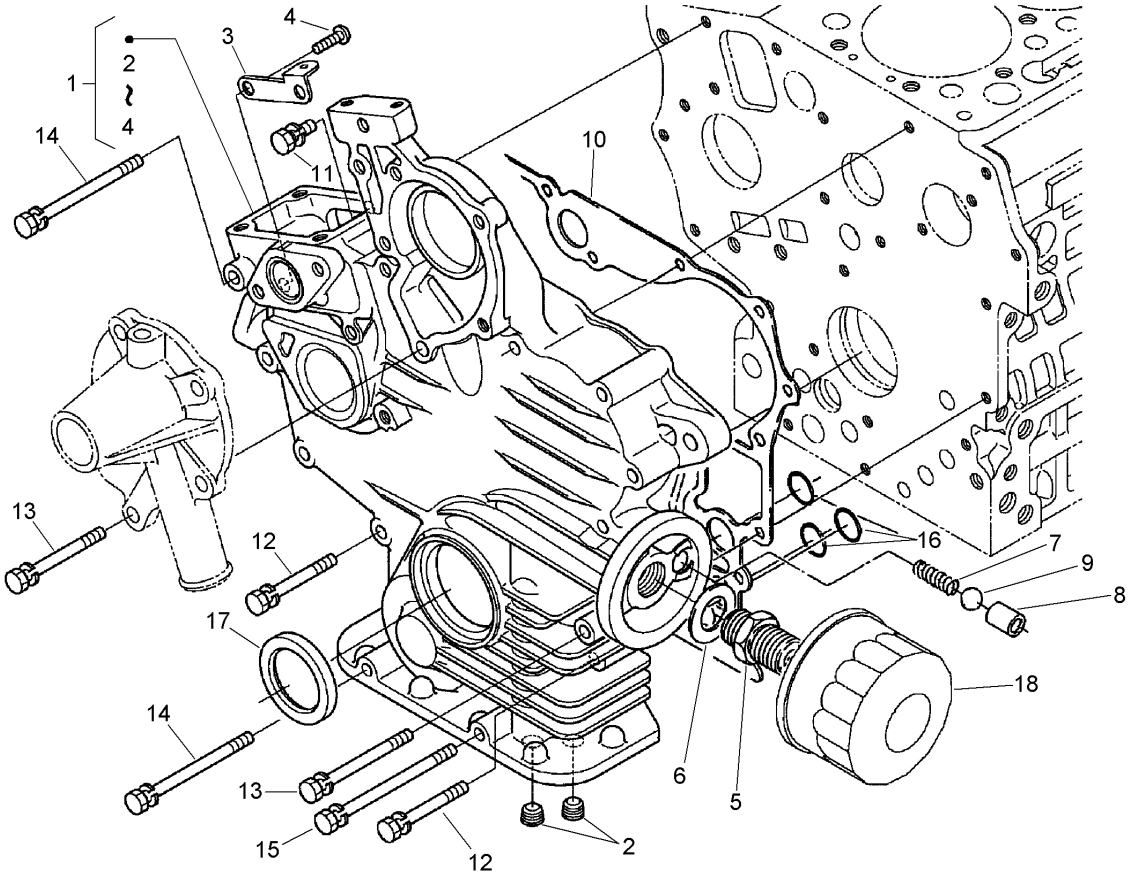

Gear Case and Oil Filter Cartridge Assembly

Ref	Part No.	Qty.	Description
1	110-3707	1	Case-Gear
2	98-7488	2	Plug
3	110-3708	1	Stay-Spring, Start
4	100-2040	2	Screw
5	98-9388	1	Joint-Pipe
6	100-1926	1	Washer-Plain
7	100-2004	1	Spring
8	100-1894	1	Seat-Valve
9	100-1792	1	Ball
10	110-3709	1	Gasket-Gearcase
11	98-7605	1	Bolt
12	98-9355	9	Bolt
13	100-1922	2	Bolt
14	98-9357	2	Bolt
15	110-3710	1	Bolt
16	100-1785	3	O-Ring
17	100-1971	1	Seal-Oil
18	100-1892	1	Cartridge-Filter, Oil

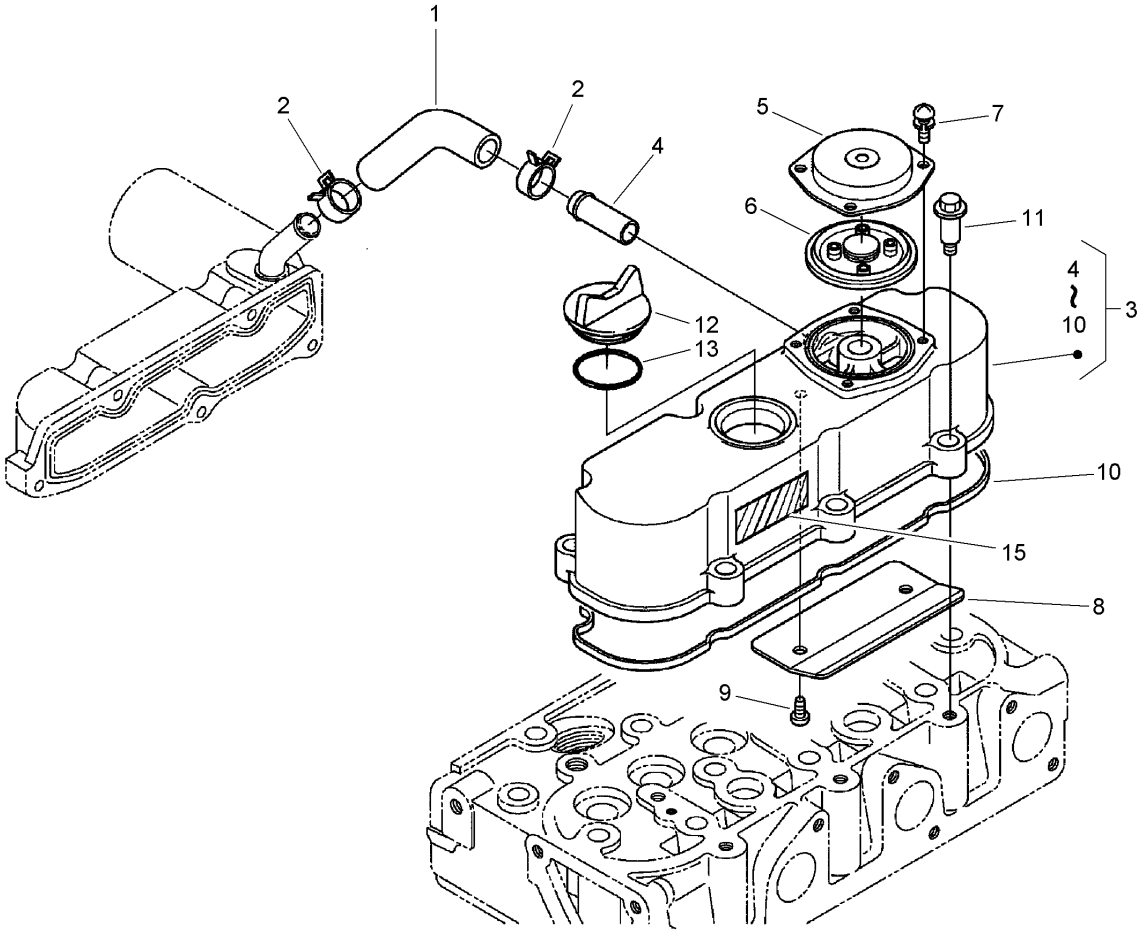

Head Cover Assembly

Ref	Part No.	Qty.	Description
1	110-3711	1	Tube-Breather
2	110-3712	2	Clamp-Hose
3	110-3713	1	Cylinder Head Cover ASM
4	98-9580	1	Pipe-Return, Water
5	110-3714	1	Cover-Breather
6	110-3715	1	Valve-Breather
7	98-9364	4	Screw (W/Washer)
8	110-3716	1	Shield-Breather
9	100-2040	2	Screw
10	110-3717	1	Gasket-Cover, Head
11	108-7063	6	Bolt
12	107-9075	1	Plug-Filler, Oil
13	99-3446	1	O-Ring
15	110-3843	1	Label-Instruction

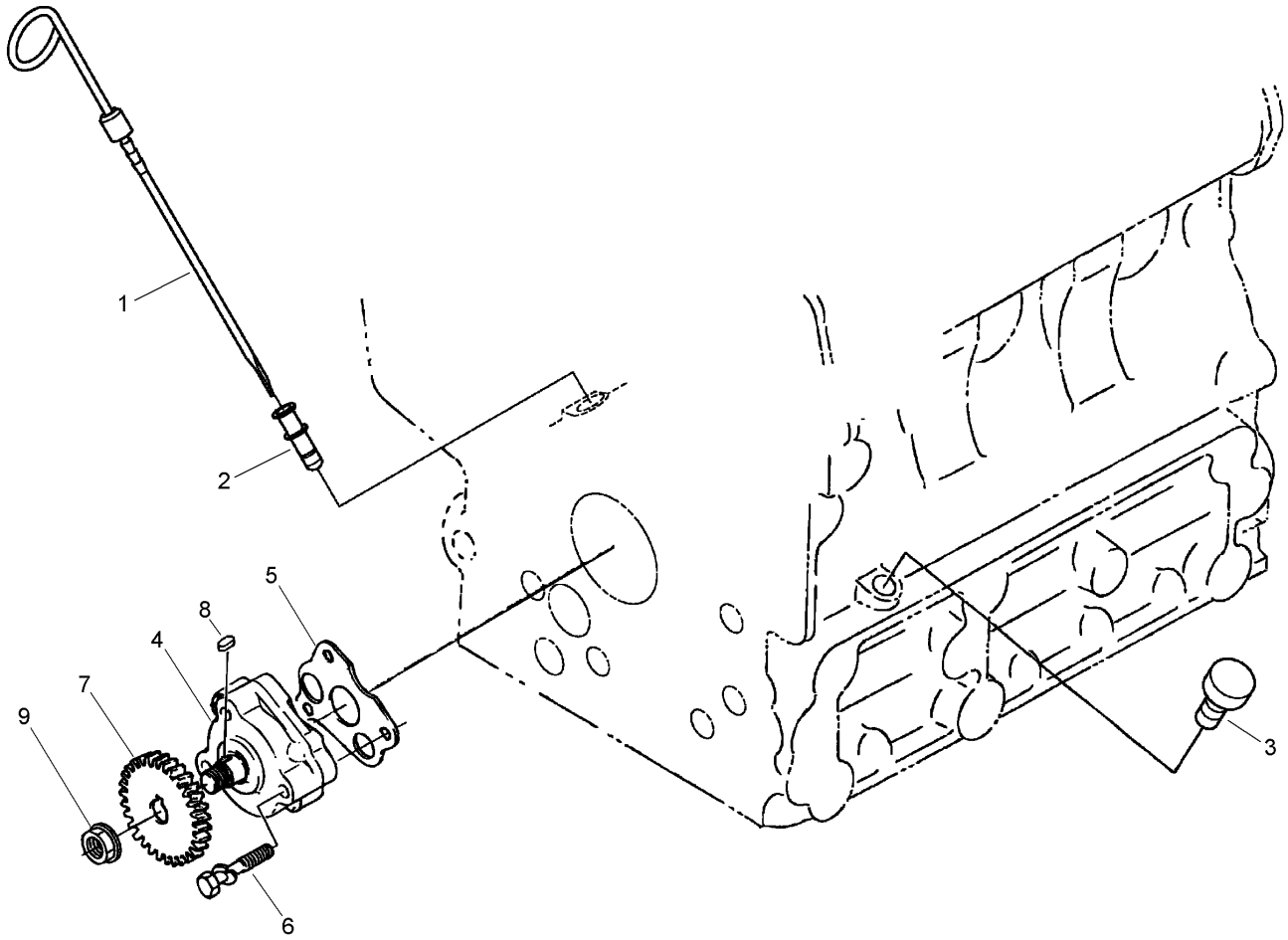

Dipstick, Guide and Oil Pump Assembly

Ref	Part No.	Qty.	Description
1	110-3719	1	Gauge-Oil
2	105-4580	1	Guide
3	110-3720	1	Plug-Gauge, Oil
4	100-2002	1	Oil Pump ASM
5	100-1958	1	Gasket-Pump, Oil
6	100-1923	3	Bolt
7	100-1893	1	Gear-Drive, Oil Pump
8	98-7658	1	Key-Feather
9	100-1779	1	Nut-Flange

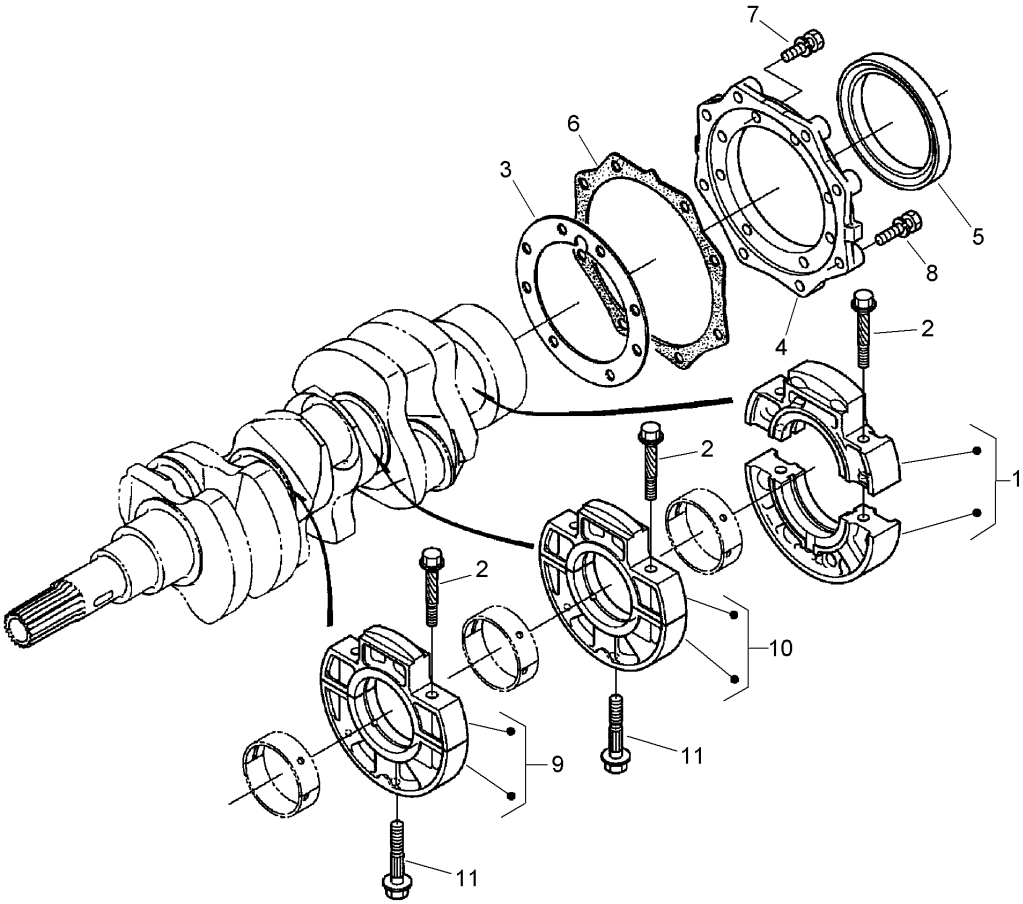

Main Bearing Case Assembly

Ref	Part No.	Qty.	Description
1	110-3722	1	Main Bearing Case ASM
2	110-3723	6	Bolt-Case, Bearing
3	100-1873	1	Gasket-Case, Bearing
4	100-1875	1	Cover-Case, Bearing
5	110-3724	1	Seal-Oil
6	100-1876	1	Gasket-Case, Bearing
7	98-7568	8	Bolt
8	100-1750	8	Bolt
9	110-3725	1	Main Bearing Case ASM
10	112-8345	1	Main Bearing Case ASM
11	100-1874	2	Bolt-Case, Bearing

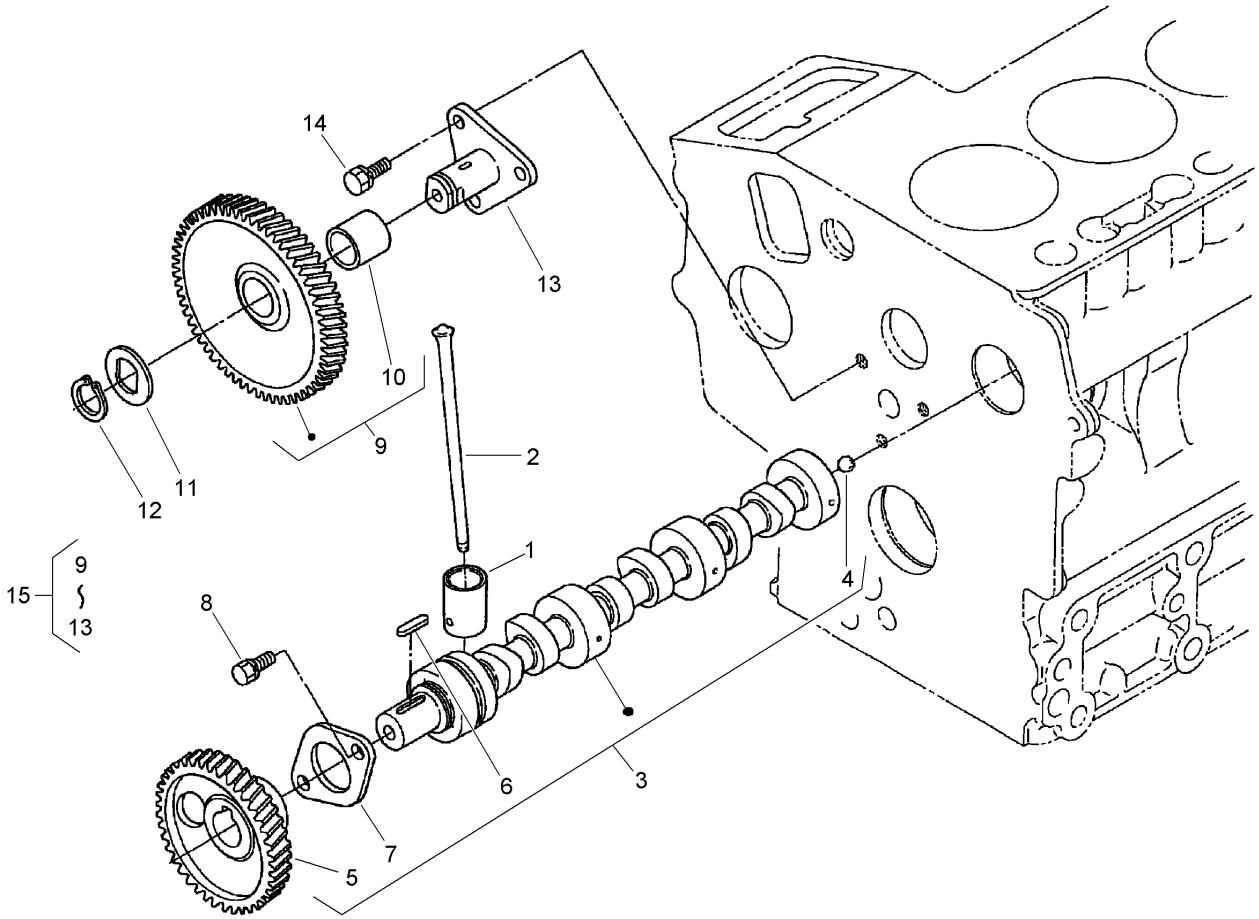

Camshaft and Idle Gear Shaft Assembly

Ref	Part No.	Qty.	Description
1	110-3727	6	Tappet
2	100-1989	6	Rod-Push
3	110-3728	1	Camshaft ASM
4	110-3729	1	Ball
5	100-2163	1	Gear-Cam
6	98-9378	1	Key-Feather
7	100-1887	1	Camshaft-Stopper
8	98-9350	2	Bolt
9	100-1966	1	Gear-Idle
10	100-1968	1	Bushing
11	100-1970	1	Collar-Gear, Idle
12	100-1969	1	Ring-Snap
13	100-1967	1	Shaft-Gear, Idle
14	98-9351	1	Bolt
15	100-2240	1	Idle Gear ASM

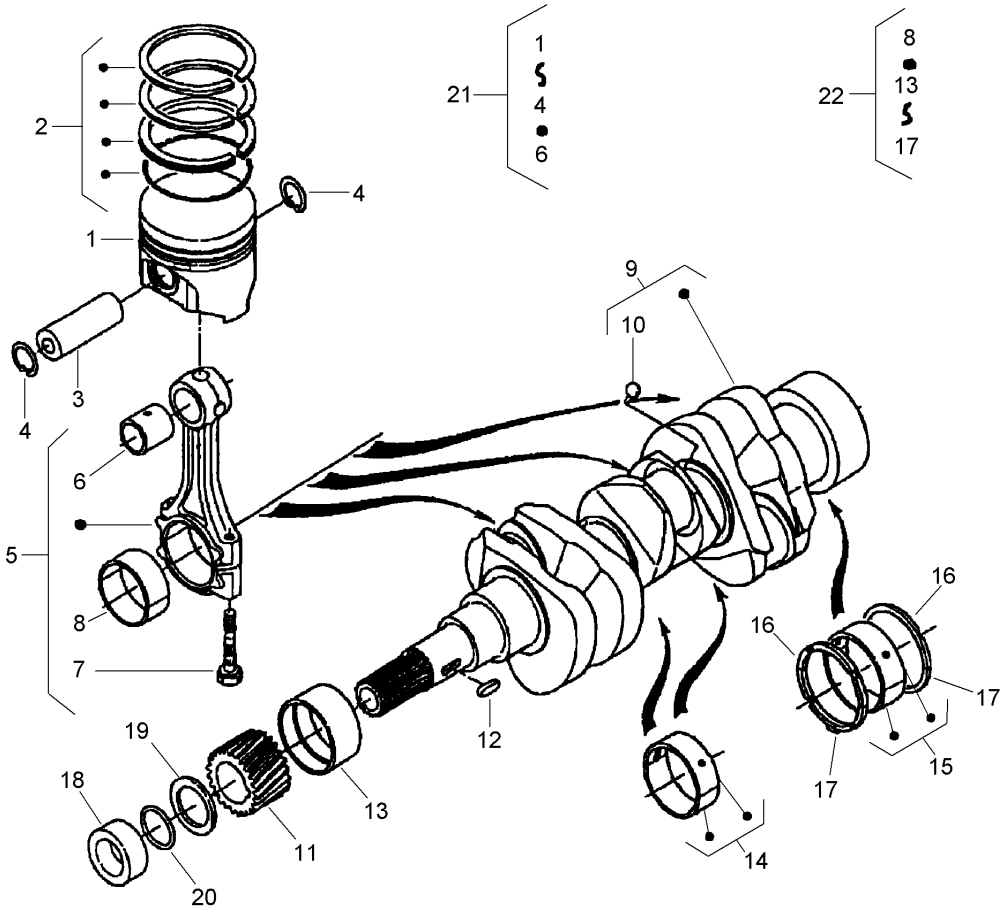

Piston and Crankshaft Assembly

Ref	Part No.	Qty.	Description
1	110-3730	3	Piston
1	110-3731	3	Piston
2	110-3732	3	Piston Ring ASM (STD)
2	110-3733	3	Piston Ring ASM (+.25Mm)
3	110-3734	3	Pin-Piston
4	100-1835	6	Clip-Pin, Piston
5	110-3735	3	Connecting Rod ASM
6	110-3736	3	Bushing-Pin, Piston
7	100-1999	6	Bolt-Rod, Connecting
8	100-1942	3	Crankpin-Metal (-0.2Mm)
8	100-1943	3	Crankpin-Metal (-0.4Mm)
8	100-2000	3	Metal-Crankpin (STD)
9	110-3737	1	Crankshaft
10	100-1791	3	Ball
11	100-1891	1	Gear-Crankshaft
12	100-1752	1	Key-Feather
13	110-3738	1	Metal-Crankshaft (STD)
13	110-3739	1	Metal-Crankshaft (-.20Mm)
13	110-3740	1	Metal-Crankshaft (-.40Mm)
14	110-3741	2	Crankshaft Metal ASM (STD)
14	110-3742	2	Crankshaft Metal ASM (-.20Mm)
14	110-3743	2	Crankshaft Metal ASM (-.40Mm)
15	110-3744	1	Crankshaft Metal ASM (STD)
15	110-3745	1	Crankshaft Metal ASM (-.20Mm)

Ref	Part No.	Qty.	Description
15	110-3746	1	Crankshaft Metal ASM (-.40Mm)
16	100-1836	2	Metal-Side (STD)
16	100-1838	2	Metal-Side (+0.2Mm)
16	100-1839	2	Metal-Side (+0.4Mm)
17	100-1837	2	Metal-Side (STD)
17	100-1840	2	Metal-Side (+0.2Mm)
17	100-1841	2	Metal-Side (+0.4Mm)
18	100-1890	1	Collar-Crankshaft
19	100-1974	1	Slinger-Oil
20	100-2209	1	O-Ring
21	110-3747	3	Piston Kit (STD)
21	110-3748	3	Piston Kit
22	110-3749	1	Engine Metal Kit
22	110-3750	1	Engine Metal Kit
22	110-3751	1	Engine Metal Kit

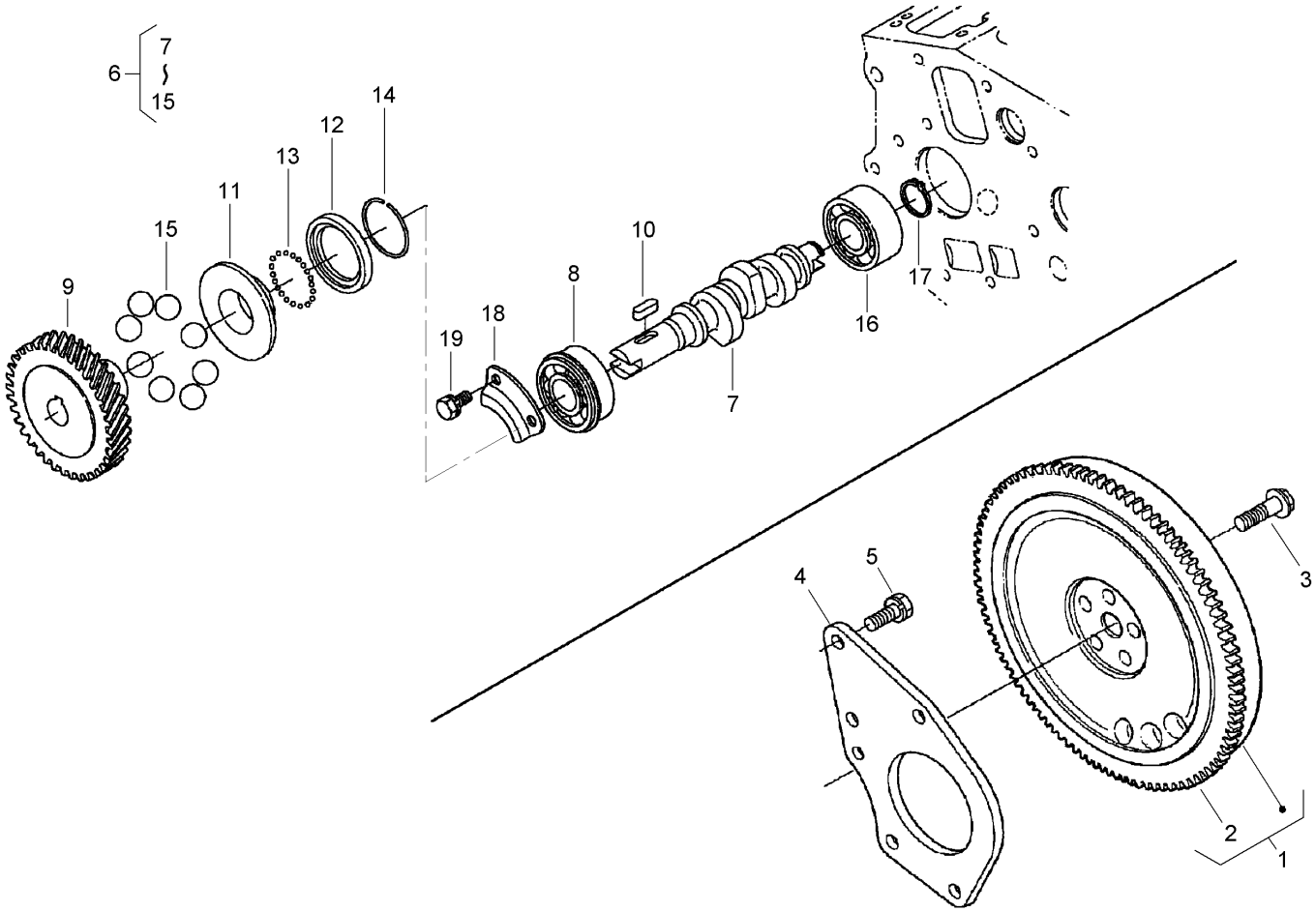

Flywheel, Fuel Camshaft and Governor Shaft Assembly

Ref	Part No.	Qty.	Description
1	110-3752	1	Flywheel
2	100-2156	1	Gear-Ring
3	100-1930	5	Bolt-Flywheel
4	110-3753	1	Plate-End, Rear
5	110-3754	3	Bolt
6	110-3755	1	Fuel Camshaft ASM
7	110-3756	1	Camshaft-Fuel
8	100-1795	1	Bearing-Ball
9	100-2006	1	Gear-Pump, Injection
10	100-1752	1	Key-Feather
11	100-1903	1	Sleeve-Governor
12	100-1904	1	Case-Ball, Governor
13	100-1790	32	Ball
14	100-1843	1	Clip-Sleeve, Governor
15	100-1793	8	Ball
16	110-3757	1	Bearing-Ball
17	100-1784	1	Clip-External
18	100-1888	1	Stopper-Fuel, Camshaft
19	98-9350	2	Bolt

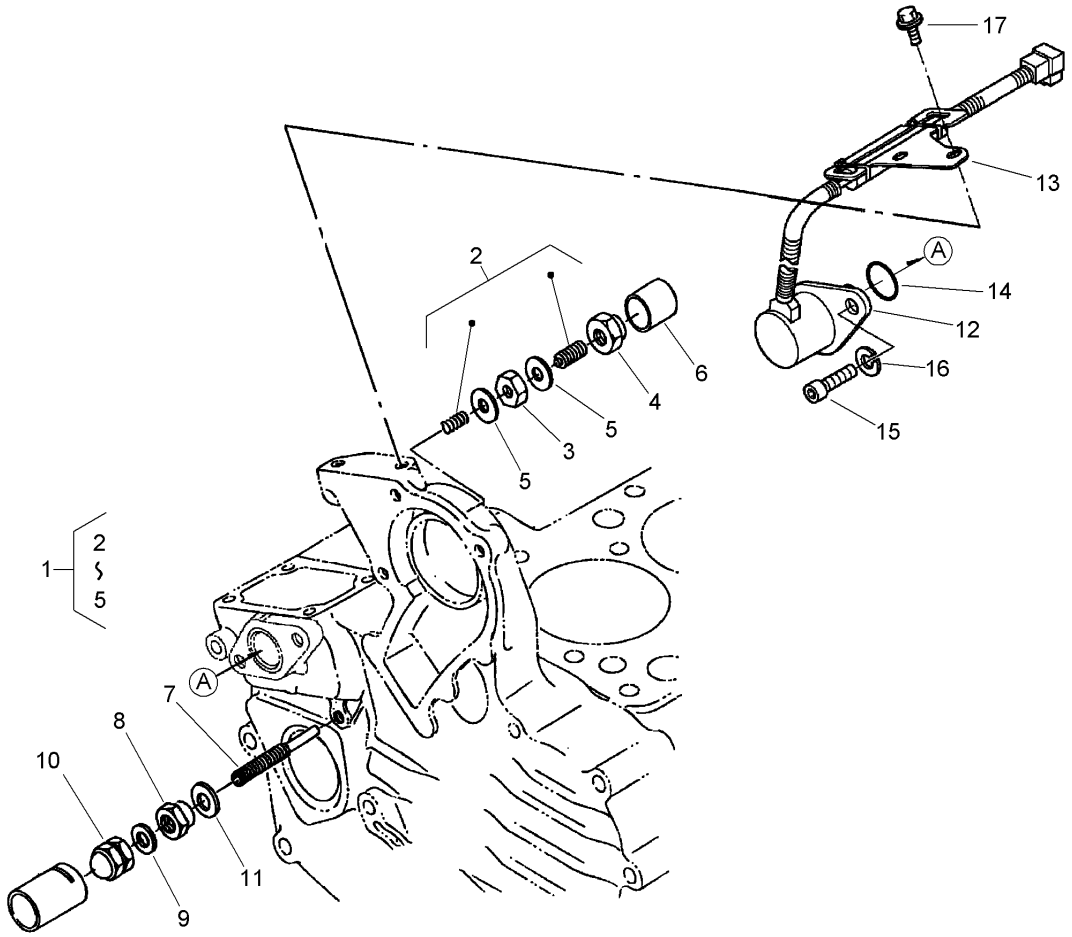

Idle Apparatus and Stop Solenoid Assembly

Ref	Part No.	Qty.	Description
1	100-1898	1	Idle Apparatus ASM
2	100-1899	1	Adjusting Bolt ASM
3	100-1846	1	Nut
4	100-1901	1	Nut-Cap
5	98-7428	2	Gasket
6	100-1902	1	Cap
7	110-3758	1	Bolt-Adjusting
8	100-2175	1	Nut-Lock
9	98-7654	1	Gasket
10	98-9441	1	Nut-Cap
11	107-9081	1	Gasket
12	110-3760	1	Solenoid-Stop
13	110-3761	1	Stay-Commander, Coil
14	110-3762	1	O-Ring
15	110-3763	2	Bolt-HSH
16	98-7515	2	Washer-Spring
17	100-1774	2	Bolt-Flange

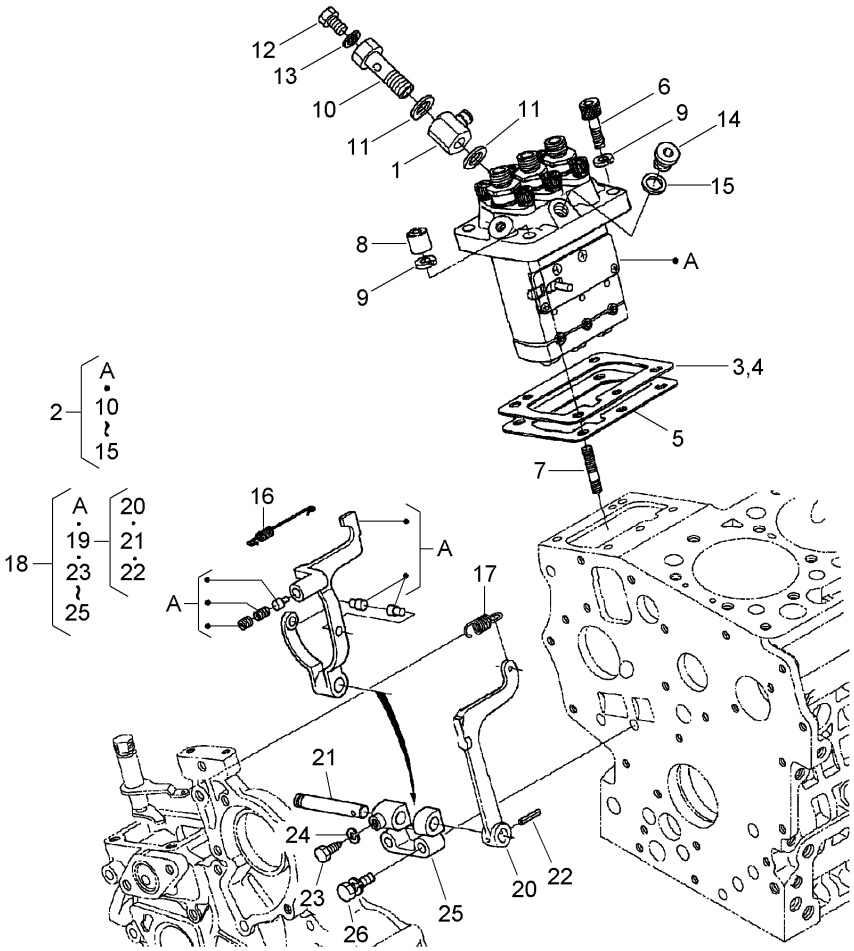

Injection Pump and Governor Assembly

Ref	Part No.	Qty.	Description
1	110-3764	1	Joint
2	110-3765	1	Injection Pump ASM
3	100-1951	1	Shim-Pump, Injection
4	100-1952	1	Shim-Pump, Injection
5	98-9458	1	Shim-Injection (0.30Mm)
6	98-9361	2	Bolt-HSH
7	98-9438	2	Stud
8	98-9440	2	Nut-Cap
9	98-7515	4	Washer-Spring
10	100-1896	1	Screw-Hollow
11	98-9445	2	Gasket
12	98-9430	1	Screw
13	98-9446	1	Gasket
14	98-9466	1	Plug
15	98-9451	1	Gasket
16	110-3766	1	Spring-Start
17	110-3767	1	Spring-Governor
18	110-3768	1	Fork Lever ASM
19	100-1905	1	Fork Lever ASM
20	100-1907	1	Lever-Fork
21	100-1908	1	Shaft-Lever, Fork
22	100-1751	1	Pin-Spring
23	100-1845	1	Bolt
24	100-1783	1	Washer-Spring

Ref	Part No.	Qty.	Description
25	100-1909	1	Holder-Lever, Fork
26	100-1763	2	Bolt

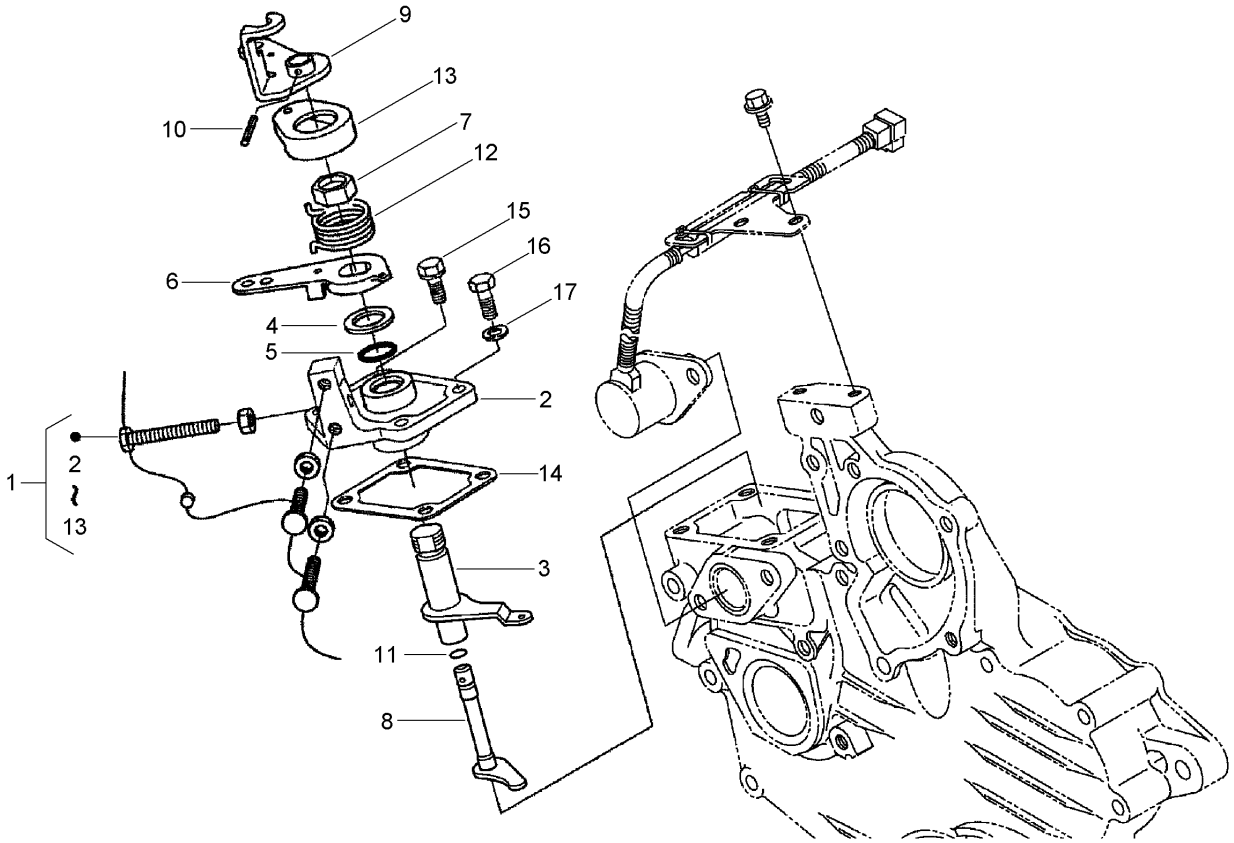

Speed Control Plate Assembly

Ref	Part No.	Qty.	Description
1	110-3769	1	Speed Control Plate ASM
2	110-3770	1	Plate-Control, Speed
3	110-3771	1	Lever-Governor
4	110-3772	1	Collar
5	100-2208	1	O-Ring
6	110-3773	1	Lever-Control, Speed
7	110-3774	1	Nut-Control, Speed
8	110-3775	1	Shaft-Lever
9	110-3776	1	Lever-Stop, Engine
10	110-3777	1	Pin-Spring
11	100-2207	1	O-Ring
12	110-3778	1	Spring-Return
13	110-3779	1	Cap
14	100-1962	1	Gasket
15	98-7605	2	Bolt
16	99-8348	2	Bolt
17	98-7654	2	Gasket

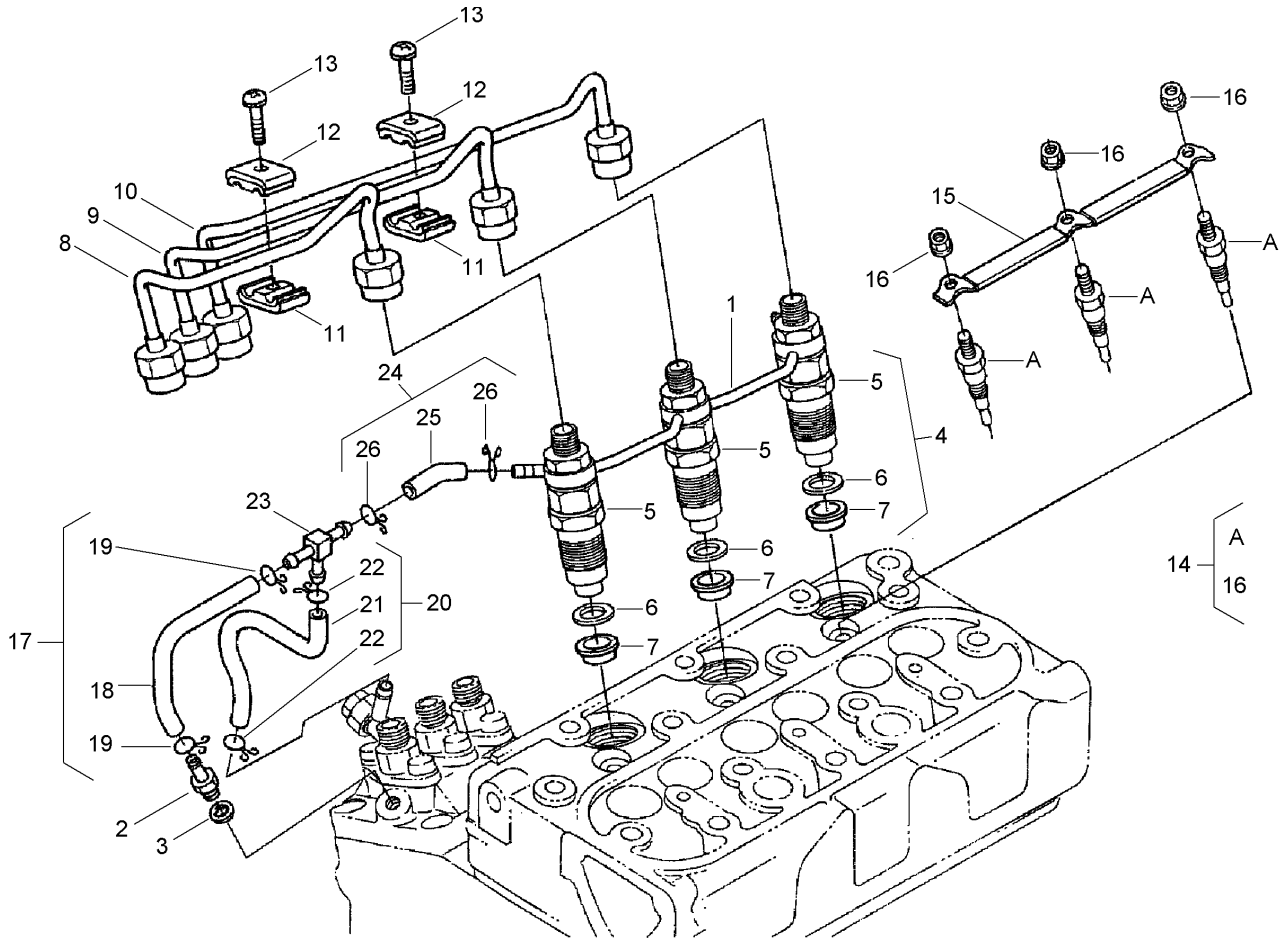

Nozzle Holder and Glow Plug Assembly

Ref	Part No.	Qty.	Description
1	110-3780	1	Over Flow Pipe ASM
2	98-9431	1	Screw-Bleeder
3	98-7654	1	Gasket
4	100-1982	3	Nozzle Holder Kit
5	100-1760	3	Nozzle Holder ASM
6	98-7676	3	Gasket
7	98-7677	3	Seal
8	110-3781	1	Pipe-Injection
9	110-3782	1	Pipe-Injection
10	110-3783	1	Pipe-Injection
11	98-7682	2	Clamp-Pipe
12	98-7683	2	Clamp-Pipe
13	98-7684	2	Screw (W/Washer)
14	98-7685	3	Plug-Glow
15	110-3784	1	Cord-Plug, Glow
16	99-8377	3	Nut-Flange
17	110-3785	1	Fuel Tube ASM
18	110-3786	1	Tube-Fuel
19	98-7671	4	Clip-Pipe
20	110-3787	1	Fuel Tube ASM
21	110-3788	1	Tube-Fuel
22	98-7671	2	Clip-Pipe
23	110-3789	1	Joint-T Pipe
24	110-3790	1	Fuel Tube ASM

Ref	Part No.	Qty.	Description
25	110-3791	1	Tube-Fuel
26	98-9545	2	Band-Pipe

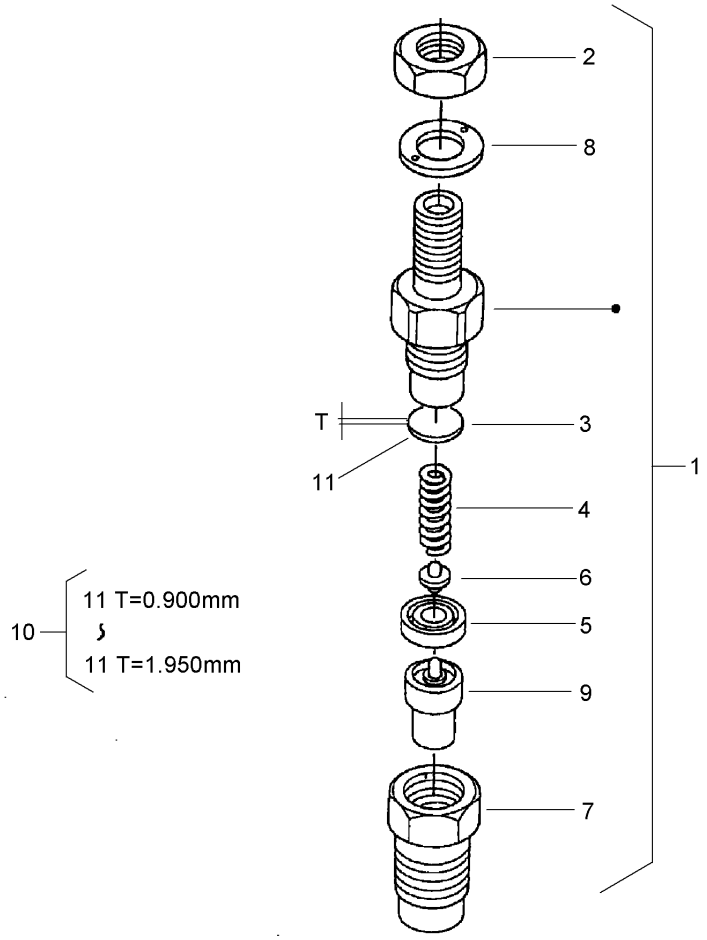

Nozzle Holder Assembly

Ref	Part No.	Qty.	Description
1	100-1760	3	Nozzle Holder ASM
2	98-7613	3	Nut
3	98-7642	3	Washer-Adjusting
4	98-7647	3	Spring-Nozzle
5	98-7665	3	Spacer-Distance
6	98-7666	3	Rod-Push
7	98-7667	3	Nut-Nozzle
8	98-7668	3	Washer
9	100-2009	3	Piece-Nozzle
10	98-9448	3	Adjusting Washer ASM
11	98-7642	3	Washer-Adjusting
11	98-7841	3	Washer-Adjusting
11	98-7842	3	Washer-Adjusting
11	98-7843	3	Washer-Adjusting
11	98-7844	3	Washer-Adjusting
11	98-7845	3	Washer-Adjusting
11	98-7846	3	Washer-Adjusting
11	98-7847	3	Washer-Adjusting
11	98-7848	3	Washer-Adjusting
11	98-7849	3	Washer-Adjusting
11	98-7850	3	Washer-Adjusting
11	98-7851	3	Washer-Adjusting
11	98-7852	3	Washer-Adjusting
11	98-7853	3	Washer-Adjusting

Ref	Part No.	Qty.	Description
11	98-7854	3	Washer-Adjusting
11	98-7855	3	Washer-Adjusting
11	98-7856	3	Washer-Adjusting
11	98-7857	3	Washer-Adjusting
11	98-7858	3	Washer-Adjusting
11	98-7859	3	Washer-Adjusting
11	98-7860	3	Washer-Adjusting
11	98-7861	3	Washer-Adjusting
11	98-7862	3	Washer-Adjusting
11	98-7863	3	Washer-Adjusting
11	98-7864	3	Washer-Adjusting
11	98-7865	3	Washer-Adjusting
11	98-7866	3	Washer-Adjusting
11	98-7867	3	Washer-Adjusting
11	98-7868	3	Washer-Adjusting
11	98-7869	3	Washer-Adjusting
11	98-7870	3	Washer-Adjusting
11	98-7871	3	Washer-Adjusting
11	98-7872	3	Washer-Adjusting
11	98-7873	3	Washer-Adjusting
11	98-7874	3	Washer-Adjusting
11	98-7875	3	Washer-Adjusting
11	98-7876	3	Washer-Adjusting
11	98-7877	3	Washer-Adjusting

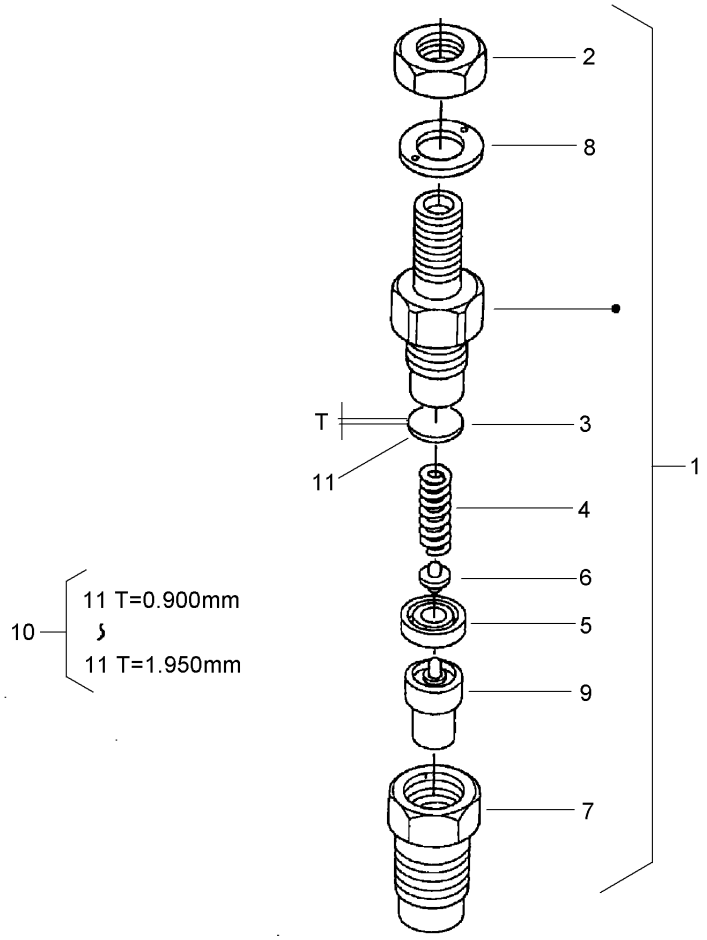

Nozzle Holder Assembly (continued)

Ref	Part No.	Qty.	Description
11	98-7878	3	Washer-Adjusting
11	98-7879	3	Washer-Adjusting
11	98-7880	3	Washer-Adjusting
11	98-7881	3	Washer-Adjusting
11	98-7882	3	Washer-Adjusting

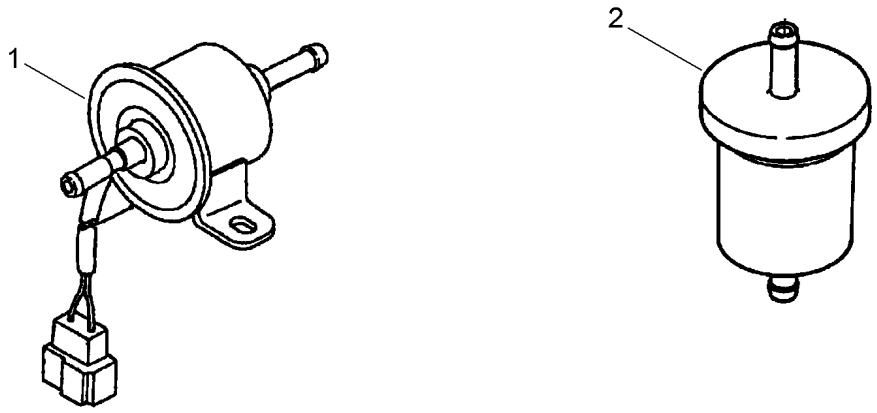

Fuel Pump and Fuel Filter Assembly

Ref	Part No.	Qty.	Description
1	107-0122	1	Pump-Fuel, Electric
2	98-7612	2	Filter-Fuel

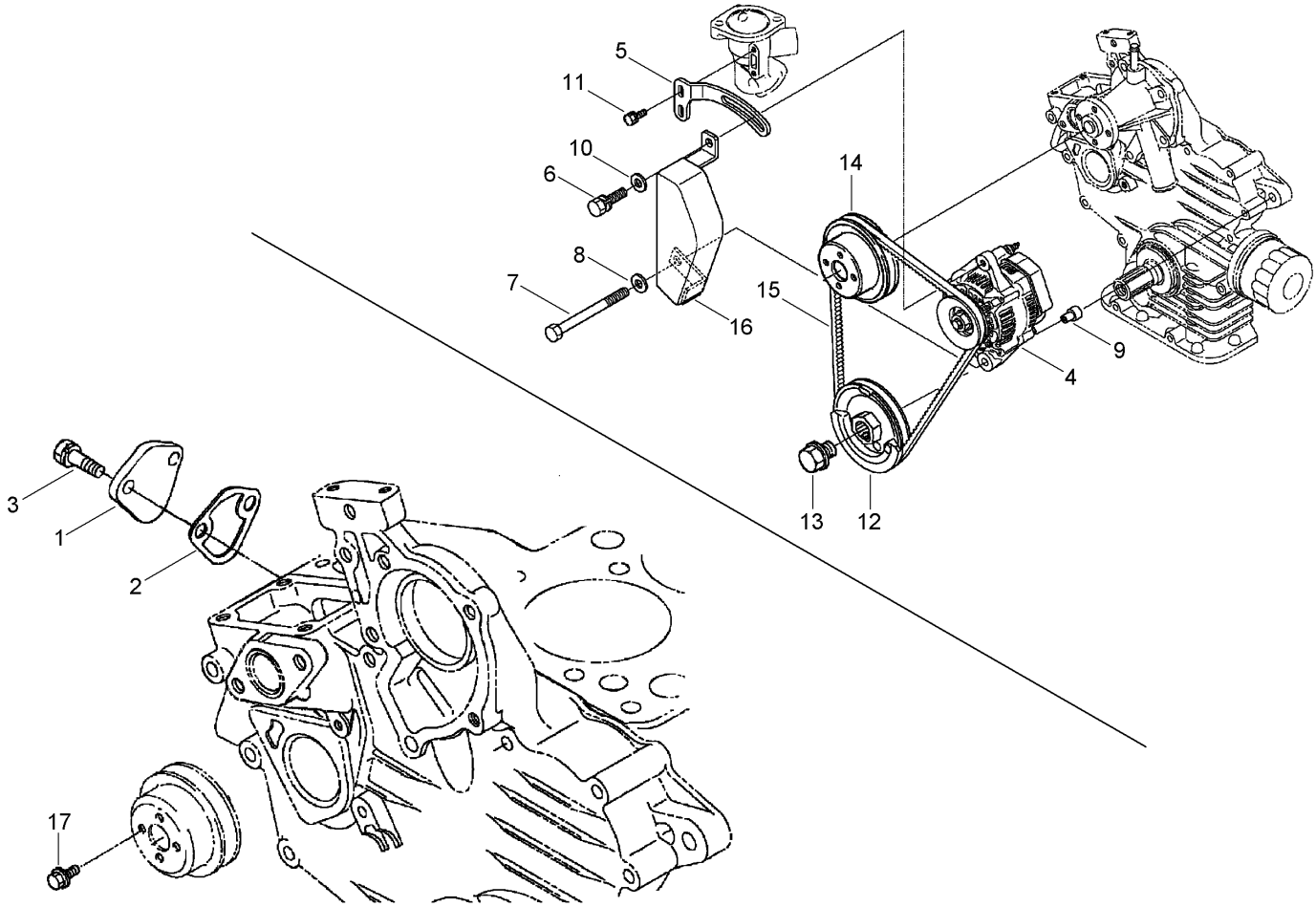

Alternator, Pulley and Fuel Pump Cover Assembly

Ref	Part No.	Qty.	Description
1	99-3514	1	Cover
2	100-1961	1	Gasket-Pump, Fuel
3	98-7692	2	Bolt
4	98-9474	1	Alternator ASM
5	110-3792	1	Stay-Alternator
6	98-7697	1	Bolt
7	110-3793	1	Bolt
8	98-7660	1	Washer-Plain
9	110-3794	1	Collar
10	100-9233	1	Washer-Plain
11	98-7692	2	Bolt
12	110-3795	1	Pulley-Drive, Fan
13	100-1978	1	Bolt
14	100-1921	1	Pulley-Fan
15	110-3796	1	V Belt
16	110-3797	1	Cover
17	99-8363	4	Bolt-Flange

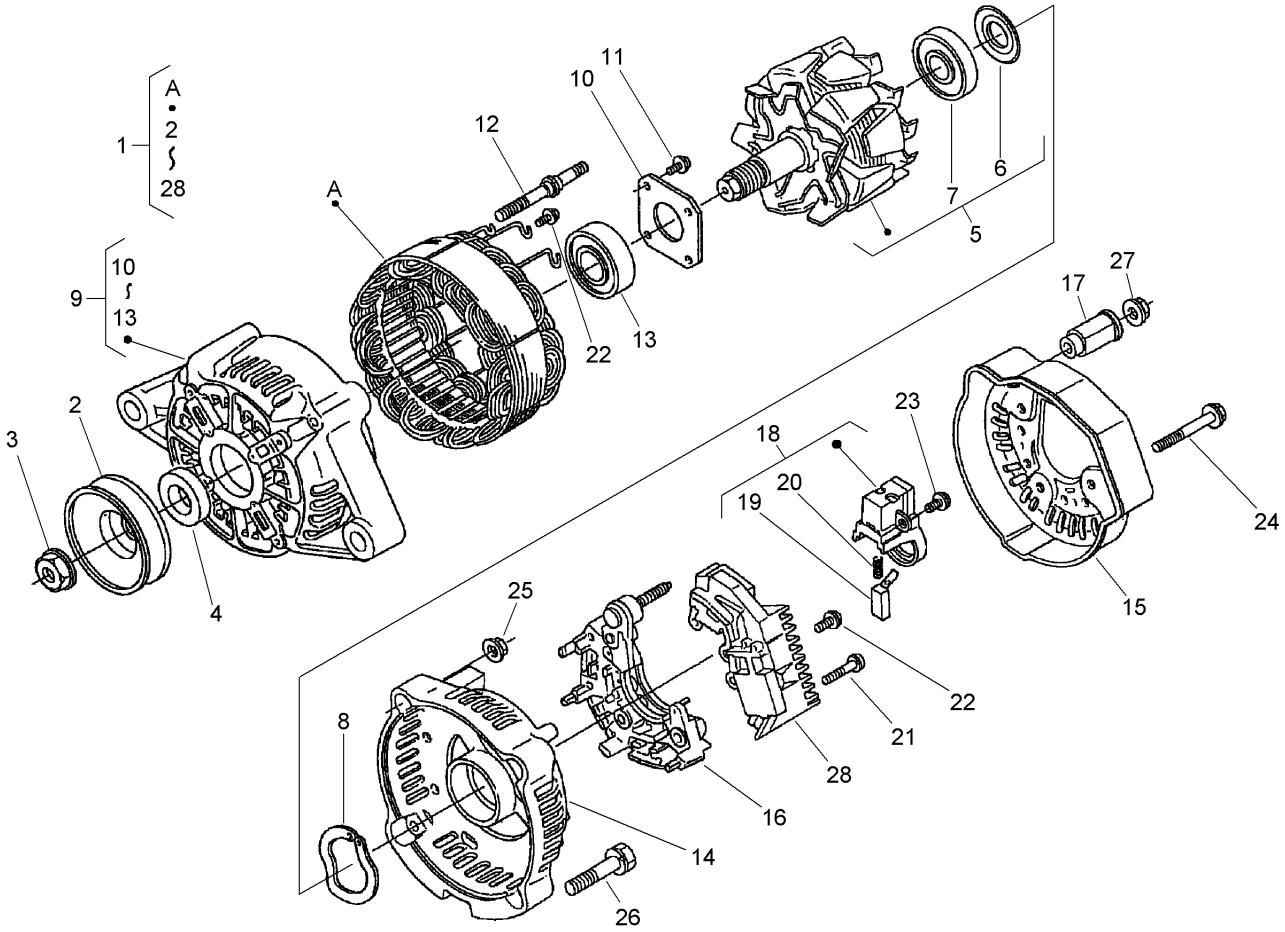

Alternator Assembly

Ref	Part No.	Qty.	Description
1	98-9474	1	Alternator ASM
2	98-9453	1	Pulley-Dynamo
3	98-7708	1	Nut
4	98-7709	1	Collar
5	107-0136	1	Rotor
6	98-7711	1	Cover-Bearing
7	107-0138	1	Bearing-Ball
8	98-7713	1	Washer-Thrust
9	107-0139	1	Drive End Frame ASM
10	98-7715	1	Plate-Retainer
11	98-7716	4	Screw-Head, Round
12	98-7717	2	Bolt-Through
13	107-0137	1	Bearing-Ball
14	107-9087	1	Frame-End
15	107-0140	1	Cover-End
16	98-7721	1	Rectifier ASM
17	98-7722	1	Bushing-Insulation
18	107-0141	1	Holder-Brush
19	98-7724	2	Brush
20	98-7725	2	Spring-Brush
21	98-7726	2	Screw-Head, Round
22	98-7727	6	Screw-Head, Round
23	98-7728	1	Screw-Head, Round
24	98-7729	3	Bolt

Ref	Part No.	Qty.	Description
25	98-7730	2	Nut
26	98-7731	2	Bolt
27	98-7732	1	Nut
28	110-3799	1	Regulator ASM

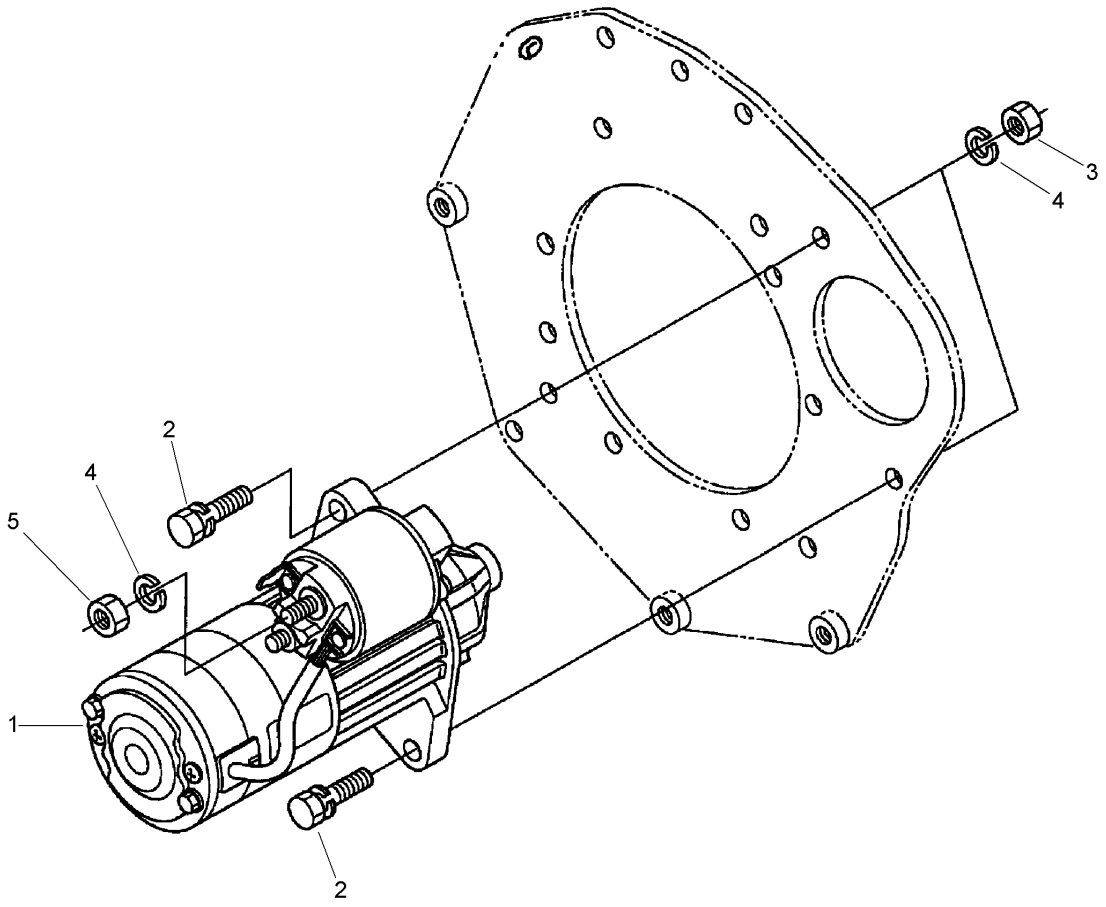

Starter Installation Assembly

Ref	Part No.	Qty.	Description
1	110-3800	1	Starter ASM
2	100-1770	2	Bolt
3	98-7661	2	Nut
4	98-7535	3	Washer-Spring
5	98-7534	2	Nut

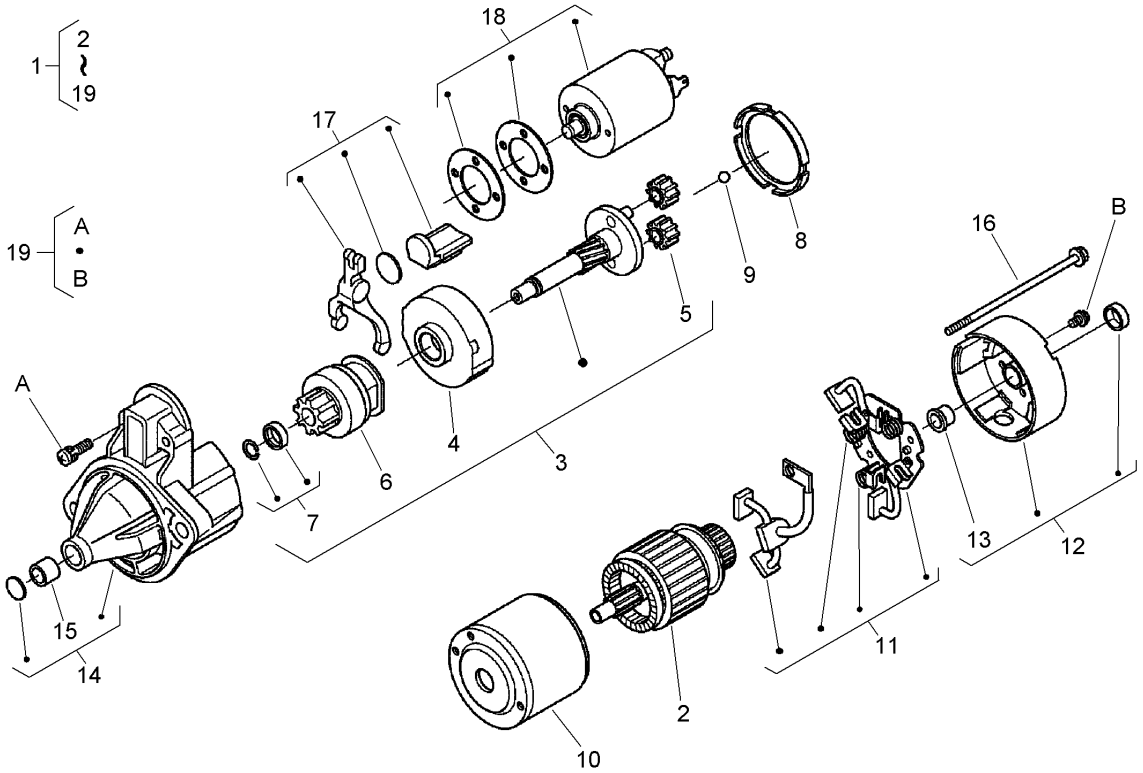

Starter Assembly

Ref	Part No.	Qty.	Description
1	110-3800	1	Starter ASM
2	110-3801	1	Armature
3	110-3802	1	Shaft ASM
4	110-3803	1	Gear-Internal
5	110-3804	3	Gear-Planetary
6	110-3805	1	Clutch-Running, Over
7	110-3806	1	Stopper
8	110-3807	1	Gasket
9	110-3808	1	Ball
10	110-3809	1	Yoke
11	110-3810	1	Brush Holder ASM
12	110-3811	1	Rear Bracket ASM
13	110-3812	1	Bush
14	110-3813	1	Front Bracket ASM
15	110-3814	1	Bush
16	110-3815	2	Bolt
17	110-3816	1	Lever-Fork
18	110-3817	1	Switch-Magnetic
19	110-3818	1	Screw-Head, Pan

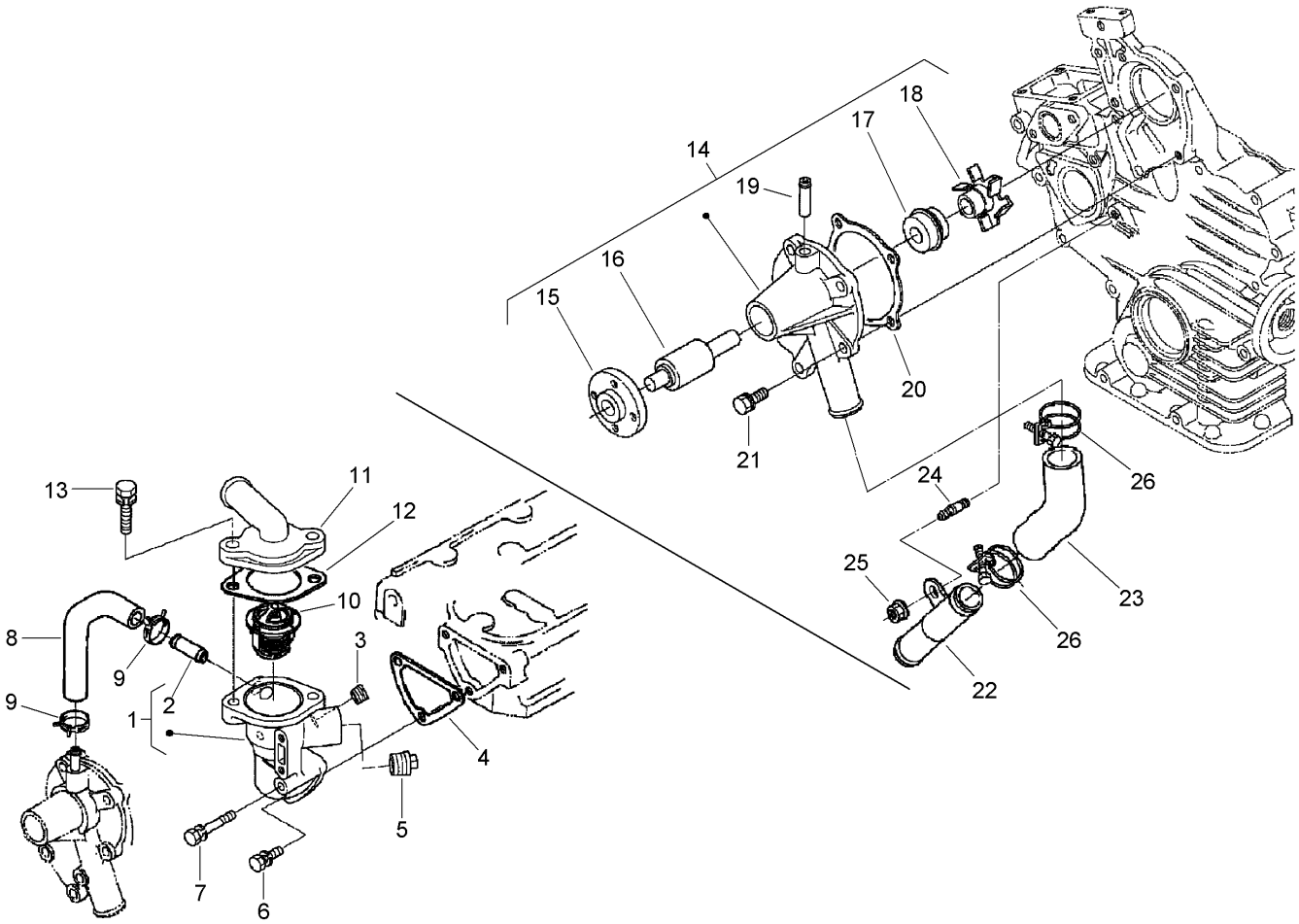

Water Flange, Pump, Pipe and Thermostat Assembly

Ref	Part No.	Qty.	Description
1	110-3819	1	Flange-Water
2	98-9580	1	Pipe-Return, Water
3	98-9444	1	Plug
4	110-3820	1	Gasket-Flange, Water
5	110-3821	1	Plug
6	98-7692	2	Bolt
7	98-9355	1	Bolt
8	110-3822	1	Pipe-Return, Water
9	98-9579	2	Band-Pipe
10	98-7778	1	Thermostat ASM
11	110-3823	1	Cover-Thermostat
12	98-7776	1	Gasket
13	98-7777	2	Bolt
14	110-3824	1	Water Pump ASM
15	100-1933	1	Flange-Pump, Water
16	100-1934	1	Bearing-Ball
17	99-3518	1	Water Pump Seal ASM
18	110-3825	1	Impeller-Pump, Water
19	100-1932	1	Pipe-Return, Water
20	110-3826	1	Gasket-Pump, Water
21	100-1750	4	Bolt
22	100-1918	1	Pipe-Water
23	110-3827	1	Pipe-Water
24	100-1924	1	Stud

Ref	Part No.	Qty.	Description
25	100-2203	1	Nut-Flange
26	110-3828	2	Band-Pipe

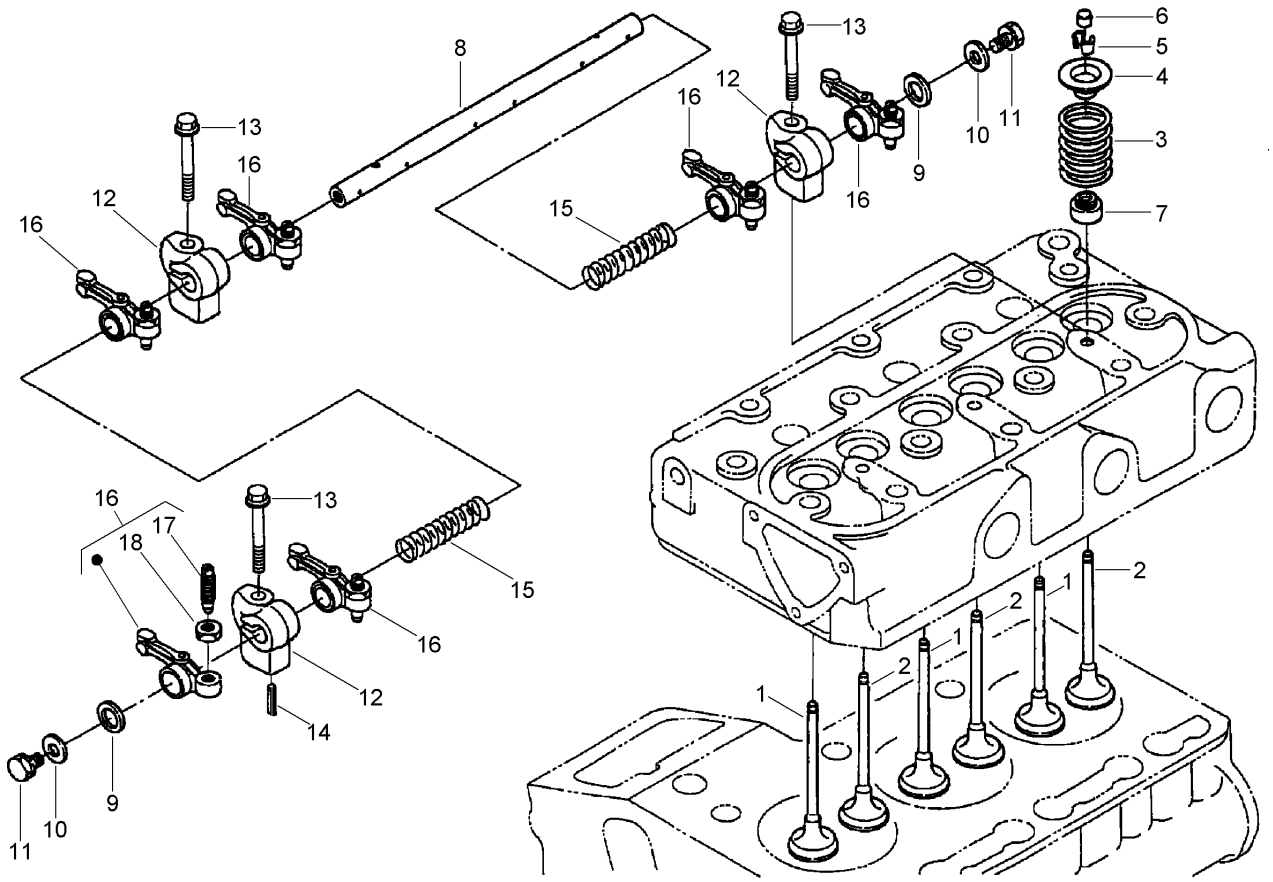

Valve and Rocker Arm Assembly

Ref	Part No.	Qty.	Description
1	110-3829	3	Valve-Inlet
2	110-3830	3	Valve-Exhaust
3	100-1823	6	Spring-Valve
4	100-1825	6	Retainer-Spring, Valve
5	100-1826	6	Collet-Spring, Valve
6	100-1824	6	Cap-Valve
7	100-1797	6	Seal-Stem, Valve
8	110-3831	1	Shaft-Arm, Rocker
9	100-2044	2	Washer
10	110-3832	2	Washer-Plain
11	100-1762	2	Bolt
12	110-3833	3	Bracket-Arm, Rocker
13	110-3834	3	Bolt-Flange
14	98-7602	1	Pin-Spring
15	110-3835	2	Spring
16	100-1884	6	Rocker Arm ASM
17	100-1885	6	Screw-Adjusting
18	100-1827	6	Nut

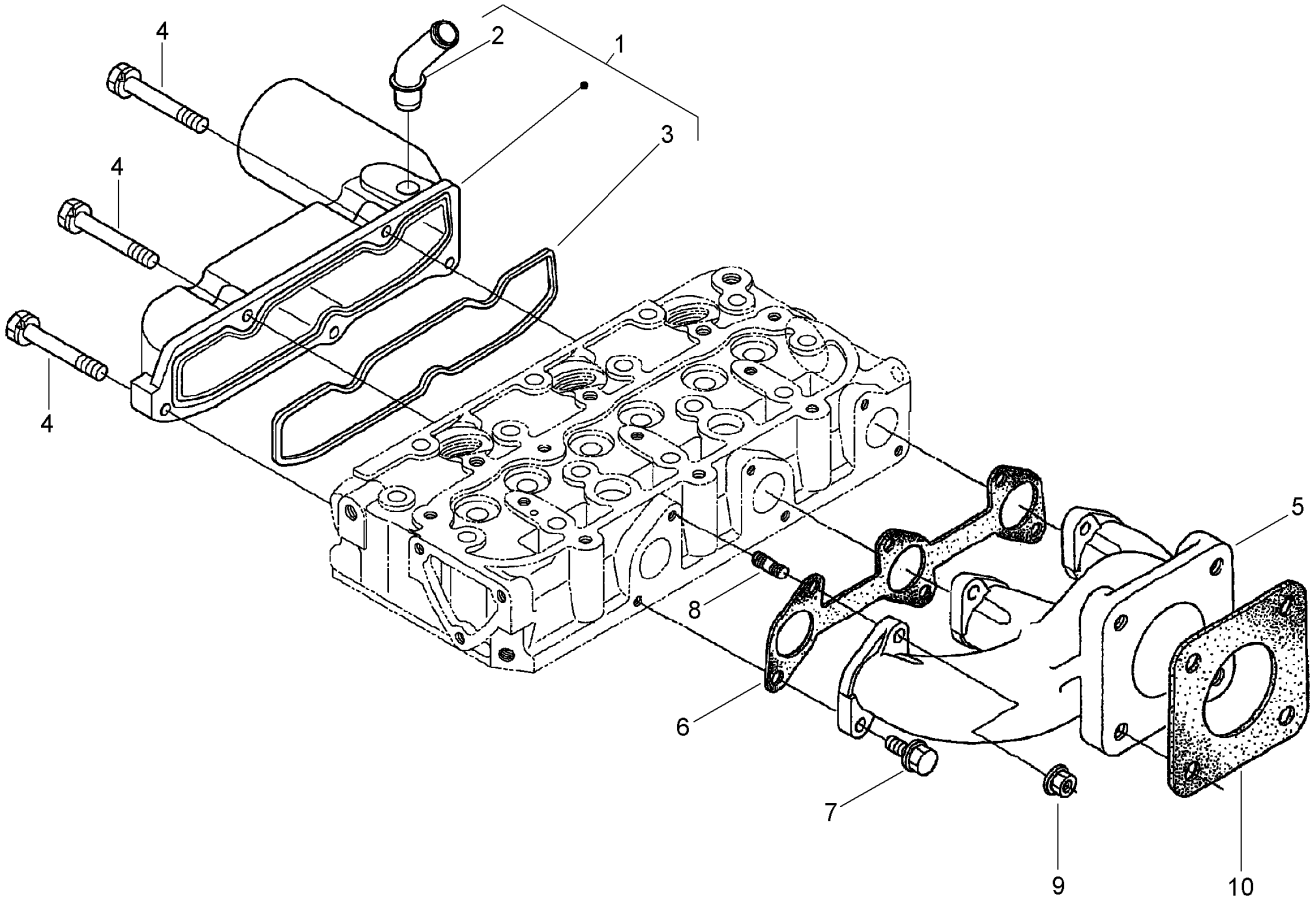

Inlet and Exhaust Manifold Assembly

Ref	Part No.	Qty.	Description
1	110-3836	1	Inlet Manifold ASM
2	110-3837	1	Pipe-Breather
3	110-3838	1	Gasket-Manifold, Intake
4	98-9352	5	Bolt
5	110-3839	1	Manifold-Exhaust
6	110-3840	1	Gasket-Manifold, Exhaust
7	100-1775	3	Bolt
8	100-2202	3	Stud
9	100-1778	3	Nut
10	99-8343	1	Gasket-Muffler

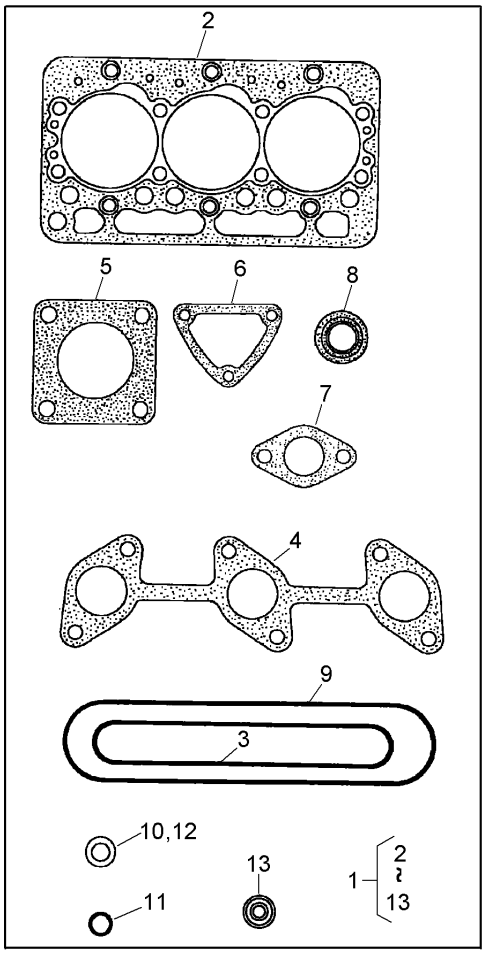

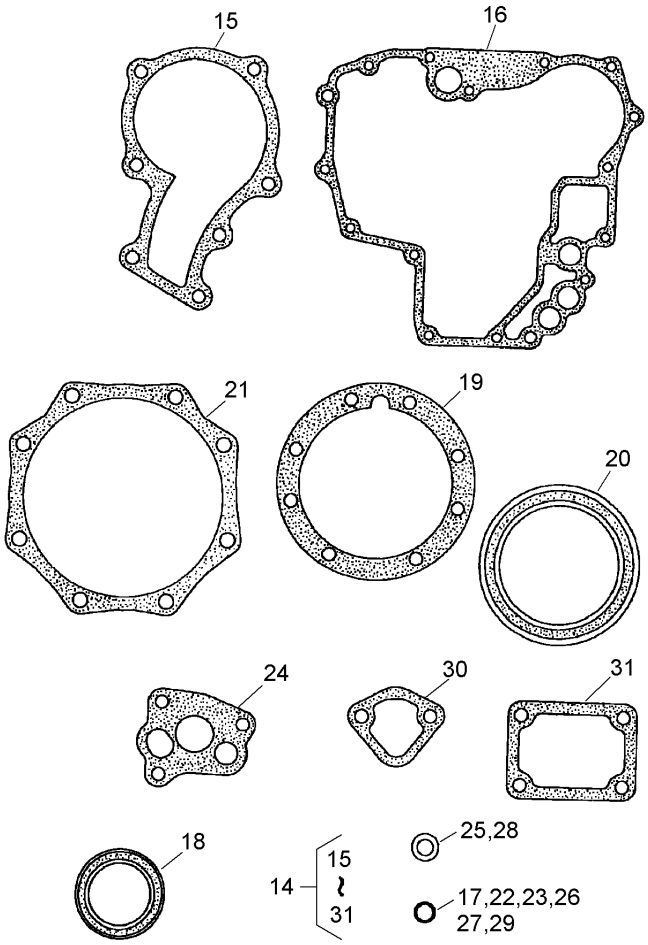

Gasket Kit

Ref	Part No.	Qty.	Description
1	110-3844	1	Upper Gasket Kit
2	110-3706	1	Gasket-Head, Cylinder
3	110-3838	1	Gasket-Manifold, Intake
4	110-3840	1	Gasket-Manifold, Exhaust
5	99-8343	1	Gasket-Muffler
6	110-3820	1	Gasket-Flange, Water
7	98-7776	1	Gasket
8	100-1797	6	Seal-Stem, Valve
9	110-3717	1	Gasket-Cover, Head
10	110-3846	1	O Ring-Breather
11	99-3446	1	O-Ring
12	98-7676	3	Gasket
13	98-7677	3	Seal
14	110-3847	1	Lower Gasket Kit
15	100-1976	1	Gasket-Pump, Water
16	110-3707	1	Case-Gear
17	98-7509	1	O-Ring
18	100-1971	1	Seal-Oil
19	100-1873	1	Gasket-Case, Bearing
20	110-3724	1	Seal-Oil
21	100-1876	1	Gasket-Case, Bearing
22	100-1785	3	O-Ring
23	100-2209	1	O-Ring
24	100-1958	1	Gasket-Pump, Oil

Ref	Part No.	Qty.	Description
25	98-7654	3	Gasket
26	100-2208	1	O-Ring
27	100-2207	1	O-Ring
28	98-9399	3	Gasket
29	100-2205	1	O-Ring
30	100-1961	1	Gasket-Pump, Fuel
31	100-1962	1	Gasket

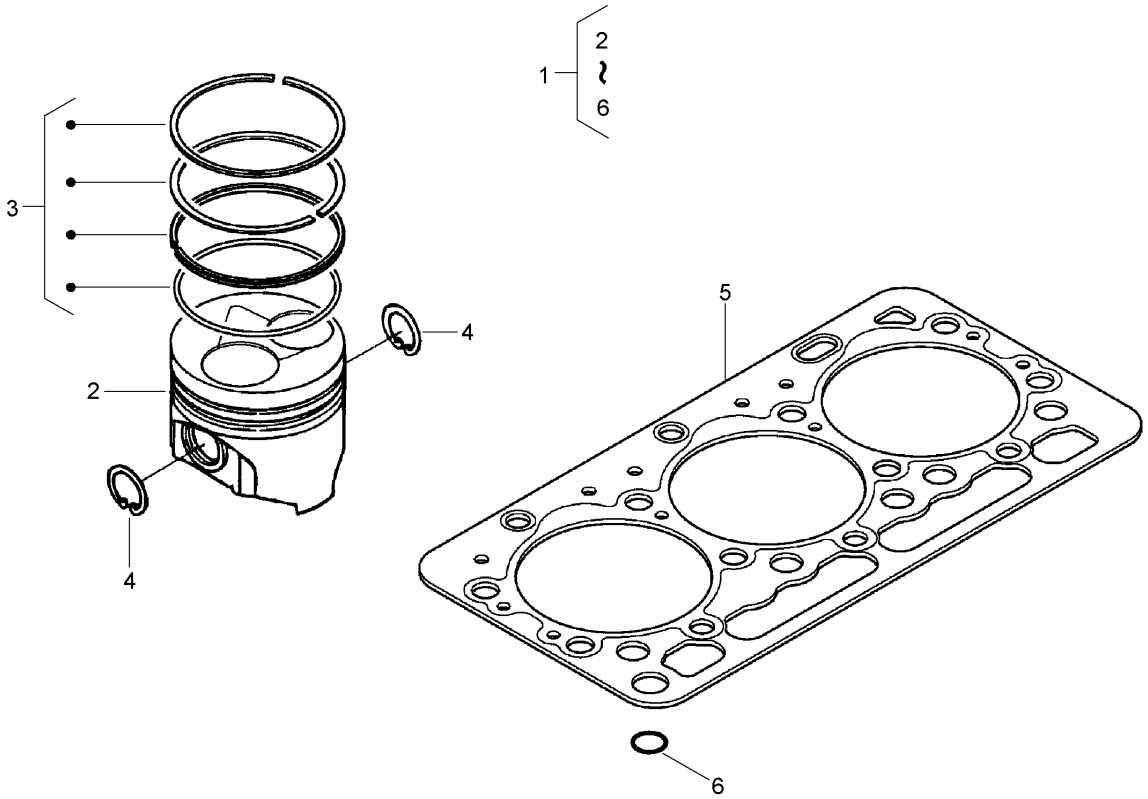

Piston Kit

Ref	Part No.	Qty.	Description
1	110-3848	1	Piston Kit
2	110-3730	3	Piston
3	110-3732	3	Piston Ring ASM (STD)
4	100-1835	6	Clip-Pin, Piston
5	110-3706	1	Gasket-Head, Cylinder
6	98-7509	1	O-Ring

Attachments and Accessories

For 74265TE - Z593-D Z Master, With 152cm TURBO FORCE Side Discharge Mower

Product Name	Model/Part
Blade-Mid Flow, 20.5 Inch	105-7715-03
Blade-Lo Flow, 20.5 Inch	105-7716-03
Blade-Hi Flow, 20.5 Inch	105-7718-03
Blade-Recycler, 20.5 Inch	105-7777-03
Blade-Atomic, 20.5 Inch	105-8777-03
60 Inch Recycler Kit	107-1611
Striping Kit	107-1630
Turbo Baffle Kit	107-1634
Light Kit	107-9880
6 Pack Blade, 20.5 Inch Hi-Flow	108-1114
6 Pack-Blade, 20.5 Inch Atomic	108-1115
6 Pack Blade, 20.5 Inch Mid-Flow	108-1123
6 Pack-Blade, 20.5 Inch Lo Flow	108-1128
Roller Striping Kit	108-2162
6 Pack-Blade, 20.5 Inch Recycler	110-0405
DFS Vac Collection System Mounting Kit	110-0891
DFS Pulley Kit	110-3944
DFS Bagger Gusset Kit	110-3946
Sunshade-Bimini	110-5726
Channel Reinforcement Kit	112-8674
DFS Vac Collection System	78514
Chute Gate Kit	78521
Filter Minder Gauge	99-4664
Hitch Kit	99-8925

NOTES

TORO®