Form Number 3358-261 Rev A

Z340 Z Master®

With 40in 7-Gauge Side Discharge Mower

Model No. 74409 - 270000701 and up.

Model No. 74409CP - 270000701 and up.

Parts Catalog

Ordering Replacement Parts

To order replacement parts, please supply the part number, the quantity, and the description of each part desired.

Understanding Reference Numbers

Each Identified part in an illustration has a reference number. The reference number for a part also appears in the parts list, along with other information about the part.

This catalog uses two special reference number formats, one to indicate parts in a service assembly and another to indicate the quantity of a given part in an illustration.

Service Assembly Reference Numbers

Parts in service assemblies have reference numbers in the form a:b. The a represents the reference number of the entire service assembly and the b represents a sequential number unique to each part within the service assembly.

For example, a wheel assembly might be identified by reference number 6, the tire by 6:1, the valve by 6:2, and the wheel by 6:3. When you order the assembly identified by reference number 6, you receive all parts identified by reference numbers 6:1, 6:2, and 6:3. However, you may also order any part individually. Reference numbers of this type appear in illustrations and in part lists.

Reference Numbers Indicating Quantity

In an illustration, if a reference number indicates more than one part, the reference number has the form nX y. The n represents the quantity of the part, the X is the multiplication symbol, and the y represents the reference number.

For example, in an illustration, the reference number 2X 37 means that two of the parts identified by reference number 37 are indicated.

Register your product at www.Toro.com

© The Toro Company - 2007
All Rights Reserved

Contents

Description	Page
Deck Connection Assembly	3
Deck Assembly	4
Spindle Assembly No. 110-9963	5
Deck Decal Assembly No.114-0518	6
Deflector Assembly No. 110-9917	7
Ilder Assembly No.112-3787	8
Brake Linkage Assembly	9
Frame Assembly	10
Frame Decal Assembly No. 114-0525	11
Caster Wheel and Height-of-Cut Assembly	12
Seat Assembly	13
Motion Control Assembly	14
Fuel Tank Assembly	15
Engine Mounting Assembly	16
Hydraulic Drive Assembly	17
RH Transmission Assembly No. 109-5846	18
LH Transmission Assembly No. 109-5847	19
Electrical Assembly	20
Cylinder and Crankcase Assembly Kawasaki FH580V-AS40-R	21
Piston and Crankshaft Assembly Kawasaki FH580V-AS40-R	22
Valve and Camshaft Assembly Kawasaki FH580V-AS40-R	23
Lubrication Equipment Assembly Kawasaki FH580V-AS40-R	24
Cooling Equipment Assembly Kawasaki FH580V-AS40-R	25
Electric Equipment Assembly Kawasaki FH580V-AS40-R	26
Control Equipment Assembly Kawasaki FH580V-AS40-R	27
Carburetor Assembly Kawasaki FH580V-AS40-R	28
Air Filter and Muffler Assembly Kawasaki FH580V-AS40-R	29
Fuel Tank and Valve Assembly Kawasaki FH580V-AS40-R	30
Starter Assembly Kawasaki FH580V-AS40-R	31
Label Assembly Kawasaki FH580V-AS40-R	32
Attachments and Accessories List	33

Part Description Abbreviations

Part descriptions in this catalog may include the following abbreviations.

AR	as required
ASM	assembly
BBC	blade brake clutch
CARR	carriage
DEG	degrees
EXT	external
FH	flat head
GA	gauge
HD	heavy-duty
HF	hex flange
HH	hex head
HHF	hex head flange
HHFTF	hex head flange thread forming
HJ	hex jam
HLH	hex lag head
HOC	height-of-cut
HSBH	hex socket button head
HSFH	hex socket flat head
HSH	hex socket head
HWH	hex washer head
HWHTF	hex washer head thread forming
HYD	hydraulic
LH	left hand
NI	nylon insert
NPTF	national pipe thread fine
PFH	phillips flat head
PPH	phillips pan head
PPHTF	phillips pan head thread forming
PRH	phillips round head
PTH	phillips truss head
PTO	power-take-off
RH	right hand
ROPS	roll-over protection system
SFH	slotted fillister head
SHH	slotted hex head
SHWH	slotted hex washer head
SPH	slotted pan head
SQH	square head
SRH	slotted round head
STD	standard
TAP	self tapping
TTH	torx truss head

Footnotes

❶ Not illustrated

❷ Not serviced separately

❸ Obtain from your local Kawasaki dealer

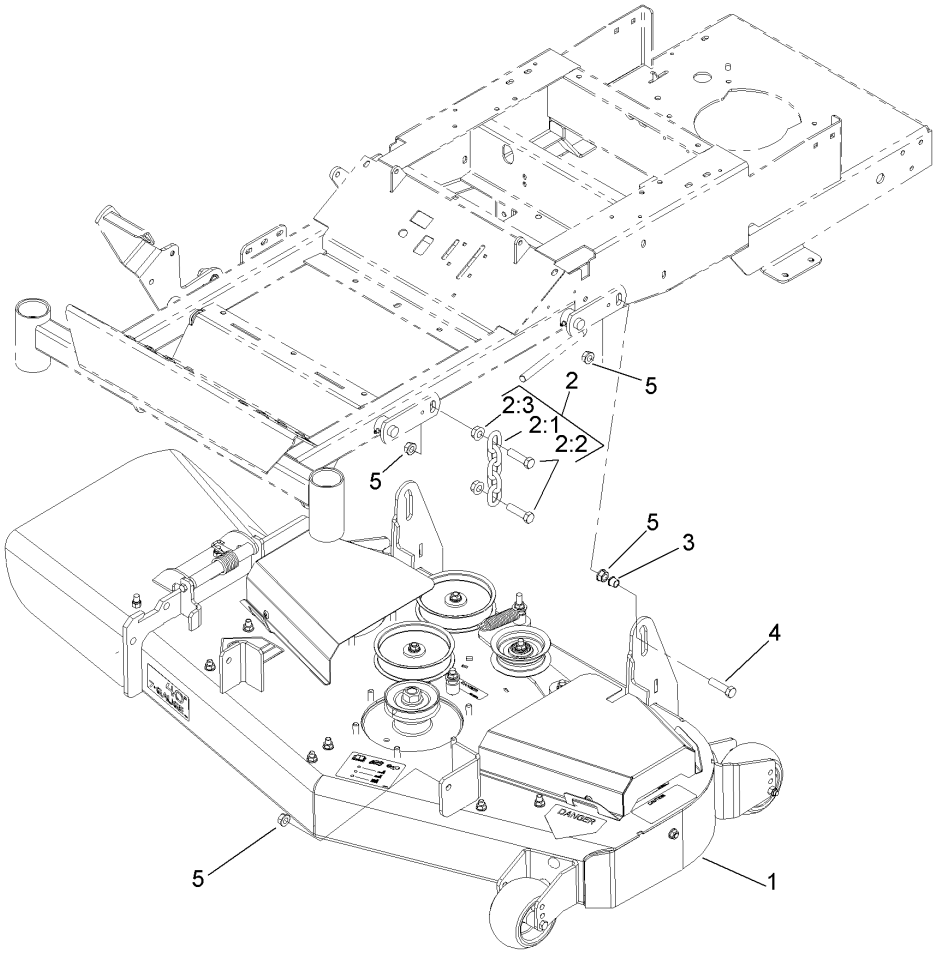

Deck Connection Assembly

Ref	Part No.	Qty.	Description
❷1		1	Deck ASM
2	103-9817	2	Deck Chain ASM
2:1	1-633447	1	Chain-Lift, Deck
2:2	103-1898	2	Screw-HH
2:3	32128-37	2	Nut-HF
3	104-9776	2	Bushing-Flanged
4	103-1898	2	Screw-HH
5	32128-37	8	Nut-HF

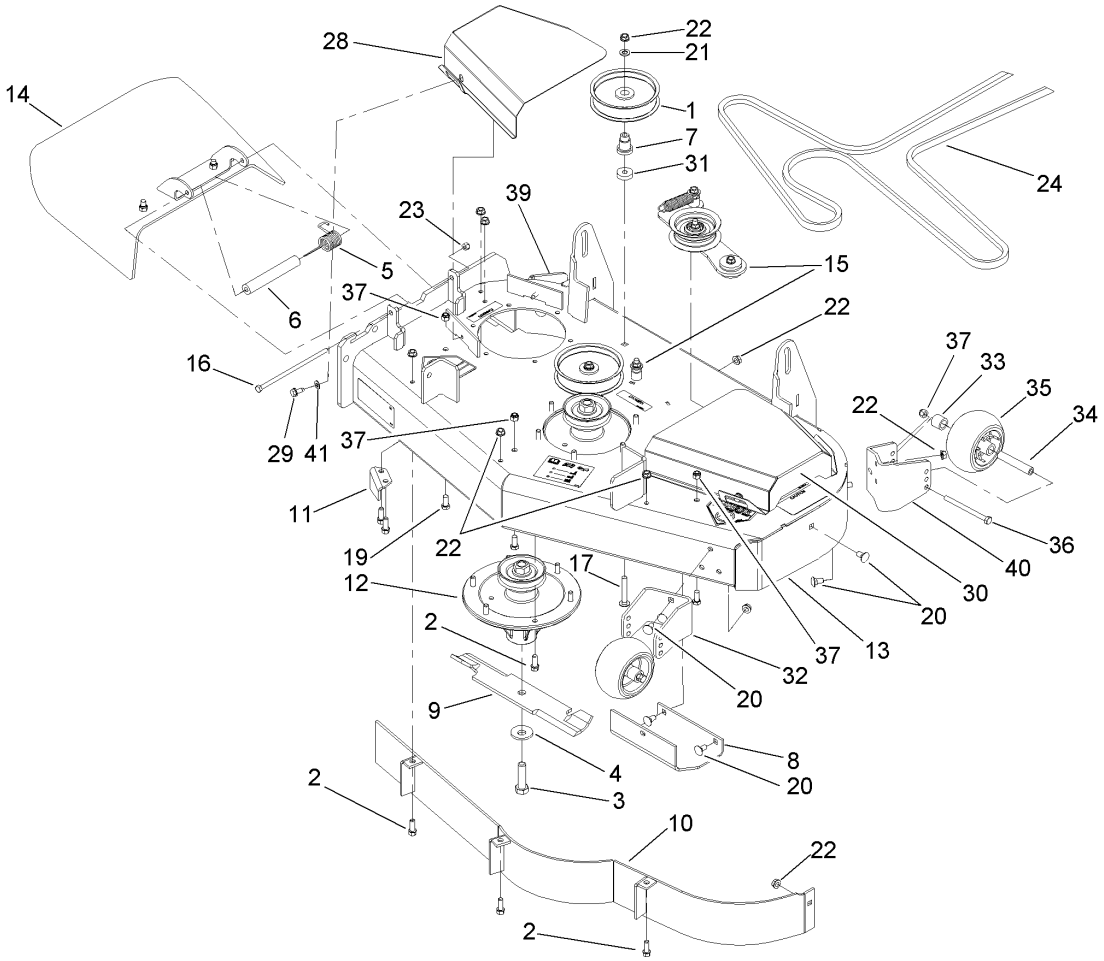

Deck Assembly

Ref	Part No.	Qty.	Description
1	1-613098	2	Pulley-Idler
2	92-1624	23	Screw
3	51-4060	3	Screw-Blade
4	103-0865	3	Washer-Blade Bolt, Heavy
5	108-4052	1	Spring-Torsion
6	105-4622	1	Spacer
7	106-3214	2	Mount-Pulley
8	107-3166-01	1	Skid
9	108-4081-03	3	Blade-14 Inch (High Sail)
10	108-7266-01	1	Baffle ASM
11	108-7273-01	1	Baffle-Discharge
12	110-9963	3	Spindle ASM
13	114-0518	1	Deck Decal ASM
14	110-9917	1	Deflector ASM
15	112-3787	1	Idler ASM
16	322-50	1	Screw-HH
17	3231-31	2	Screw-CARR
19	323-5	3	Screw-HH
20	3231-1	10	Screw-CARR
21	3256-24	2	Washer-Flat
22	3290-357	26	Nut-HHF, Whiz
23	3296-29	1	Nut-Lock, NI
24	114-0453	1	Belt-V
28	110-9959-01	1	Cover-RH

Ref	Part No.	Qty.	Description
29	32144-70	4	Screw-HWHTF
30	110-9982-01	1	Cover-LH
31	105-7788	2	Spacer
32	110-9946-01	1	Plate-Support, Wheel
33	98-7913	3	Tube-Spacer
34	98-7912	3	Tube-Spanner
35	1-603299	3	Roller-Scalp, Anti
36	323-23	3	Screw-HH
37	3296-39	6	Nut-Lock, NI
39	110-9991-01	1	Mount-Wheel, RH
40	110-9992-01	1	Mount-Wheel, LH
41	3256-23	4	Washer-Flat

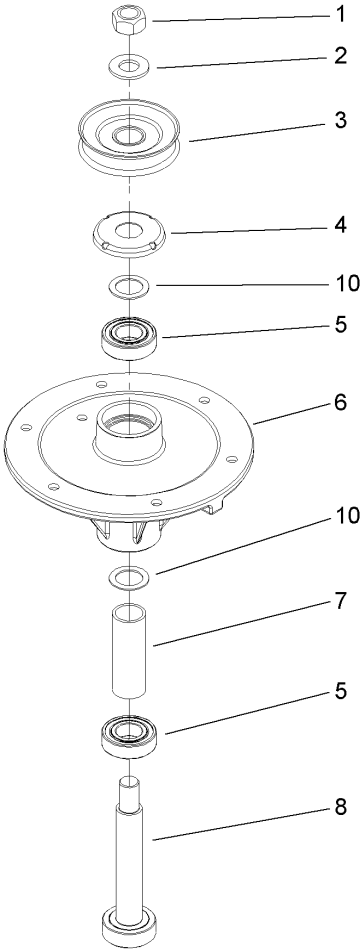

Spindle Assembly No. 110-9963

Ref	Part No.	Qty.	Description
1	3219-7	1	Nut-Hex
2	7-4150	1	Washer
3	110-9931	1	Pulley
4	106-3204	1	Shield-Bearing
5	104-6325	2	Bearing
6	108-6696	1	Housing-Spindle
7	107-8502	1	Spacer-Bearing
8	110-0726	1	Shaft-Spindle
10	10-8110	2	Washer-Thrust

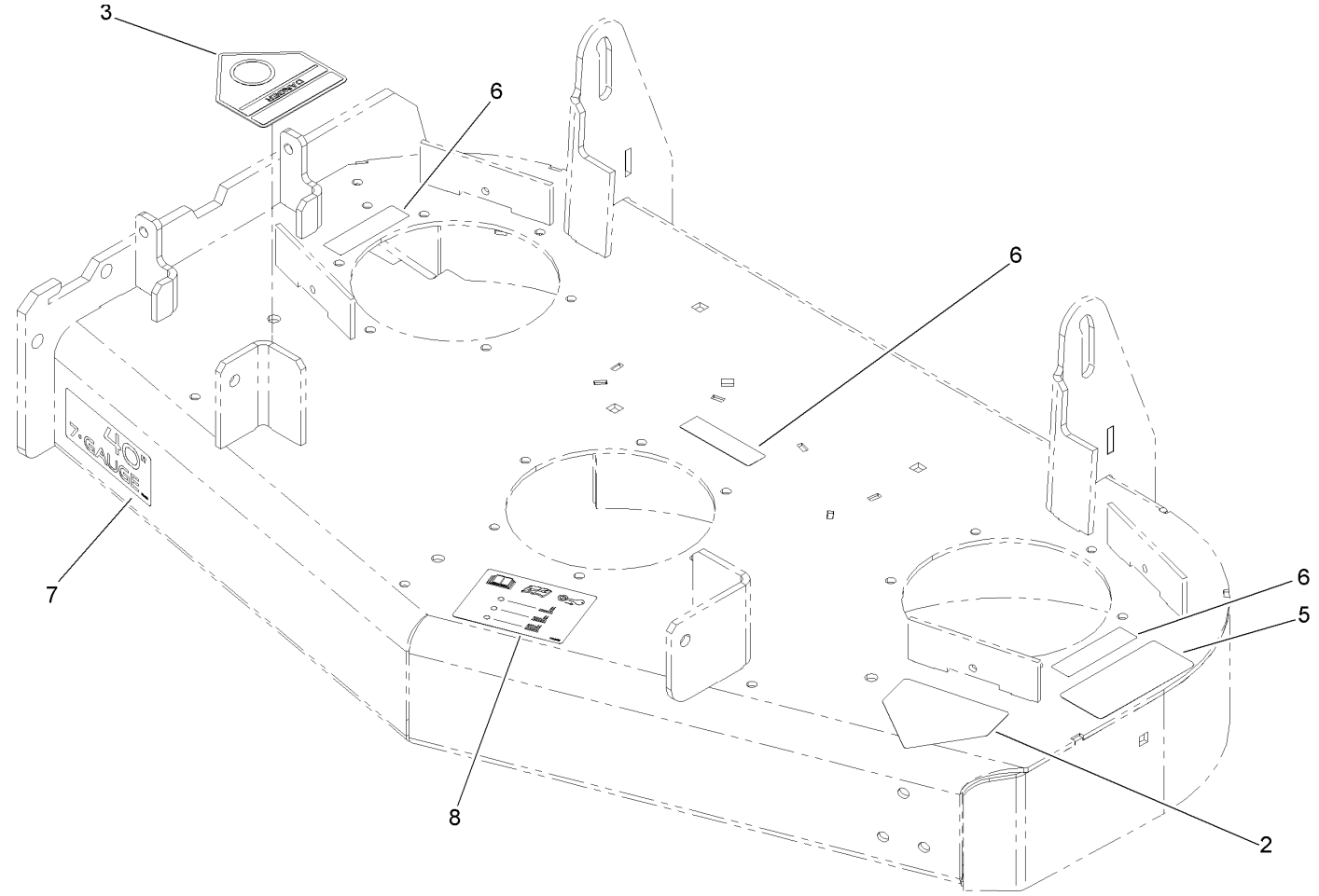

Deck Decal Assembly No.114-0518

Ref	Part No.	Qty.	Description
2	1-403005	1	Decal-Danger
3	54-9220	1	Decal-Danger
5	68-8340	1	Decal-Torque
6	98-5954	3	Decal-Cover, Missing
7	112-3792	1	Decal
8	112-3858	1	Decal-Anti Scalp

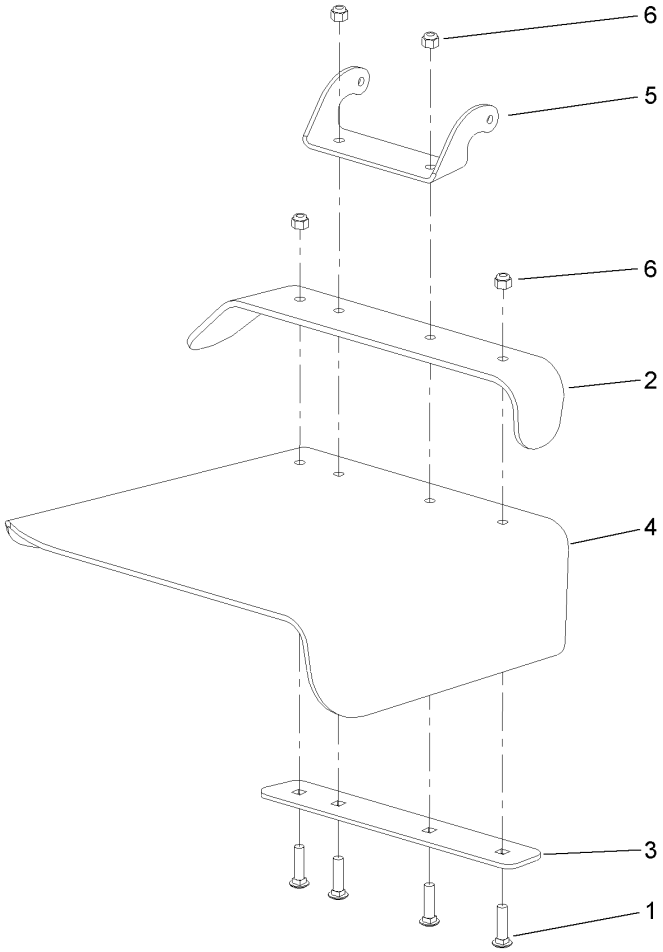

Deflector Assembly No. 110-9917

Ref	Part No.	Qty.	Description
1	3231-4	4	Screw-CARR
2	110-0792-01	1	Deflector
3	110-0793-03	1	Strap-Discharge
4	110-0791	1	Deflector-Rubber
5	110-9923-01	1	Bracket-Mounting, Deflector
6	3296-39	4	Nut-Lock, NI

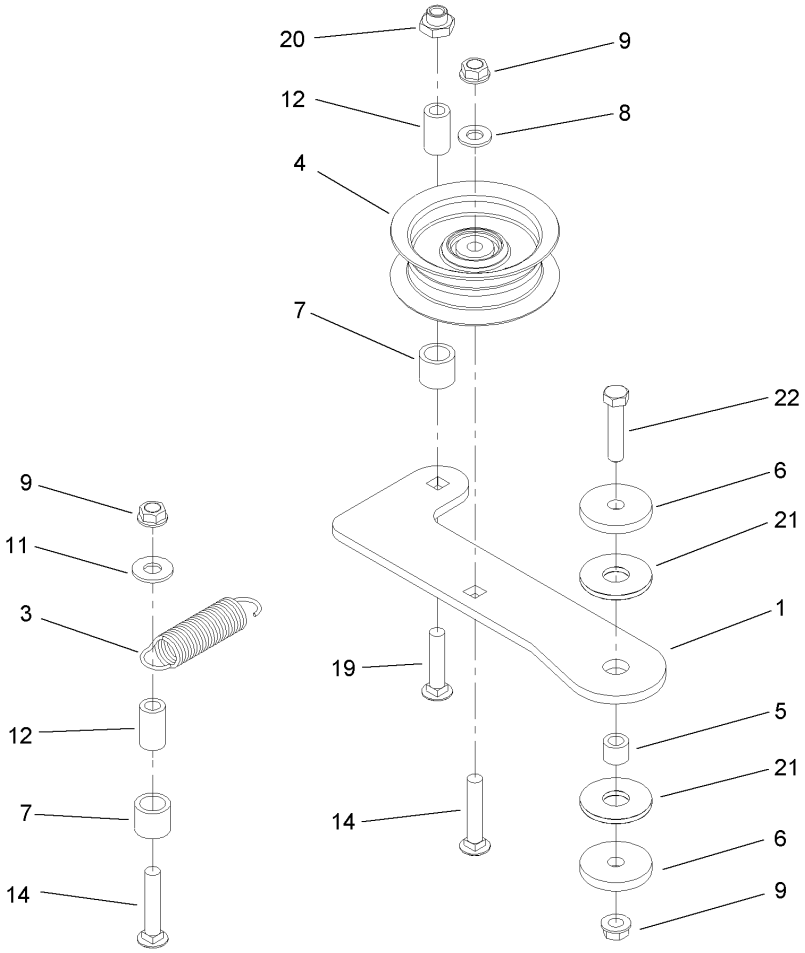

Ilder Assembly No.112-3787

Ref	Part No.	Qty.	Description
1	110-9996	1	Arm-Idler
3	108-4056	1	Spring-Extension
4	106-2175	1	Pulley-Idler, Flat
5	1-413088	1	Bushing-Lever, Lift
6	110-9981	2	Washer-Plain
7	108-4063	2	Spacer-Rubber
8	3256-24	1	Washer-Flat
9	3290-357	3	Nut-HHF, Whiz
11	3256-4	2	Washer-Flat
12	1-603401	3	Spacer-Fender
14	3231-6	2	Screw-CARR
19	3231-5	1	Screw-CARR
20	103-9933	1	Nut-Shoulder
21	114-0463	2	Washer-Friction, Composite
22	323-9	1	Screw-HH

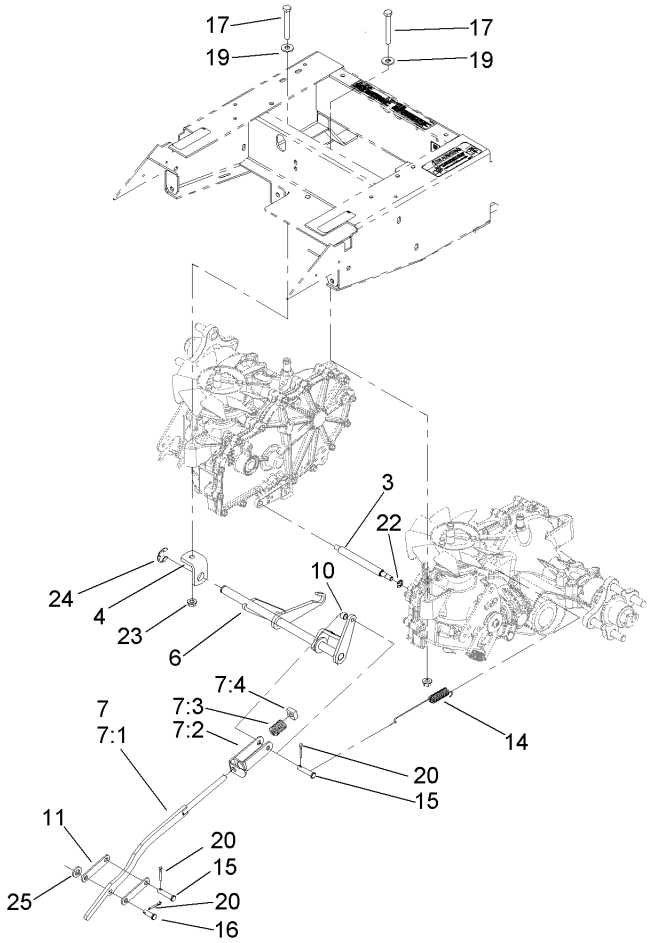

Brake Linkage Assembly

Ref	Part No.	Qty.	Description
3	103-9408	1	Bar-Equalizer
4	103-9409	1	Bracket-Pivot, Brake
6	109-5376	1	Brake Bellcrank
❷7		1	Brake Link ASM
7:1	109-5370	1	Brake Link
7:2	114-0548	1	Clevis-Brake
7:3	103-9925	1	Spring-Brake
7:4	103-9926	1	Nut-Square
10	1-633545	1	Spacer
11	109-0223	2	Link-Center, Over
14	109-2861	1	Spring-Return, Brake
15	283-6	2	Pin-Clevis
16	283-75	1	Pin-Clevis
17	322-12	2	Screw-HH
19	3256-3	2	Washer-Flat
20	3272-10	3	Pin-Cotter
22	32120-35	1	Ring-Retaining, EXT
23	32128-20	2	Nut-HF
24	32151-48	1	E-Ring
25	3256-23	2	Washer-Flat

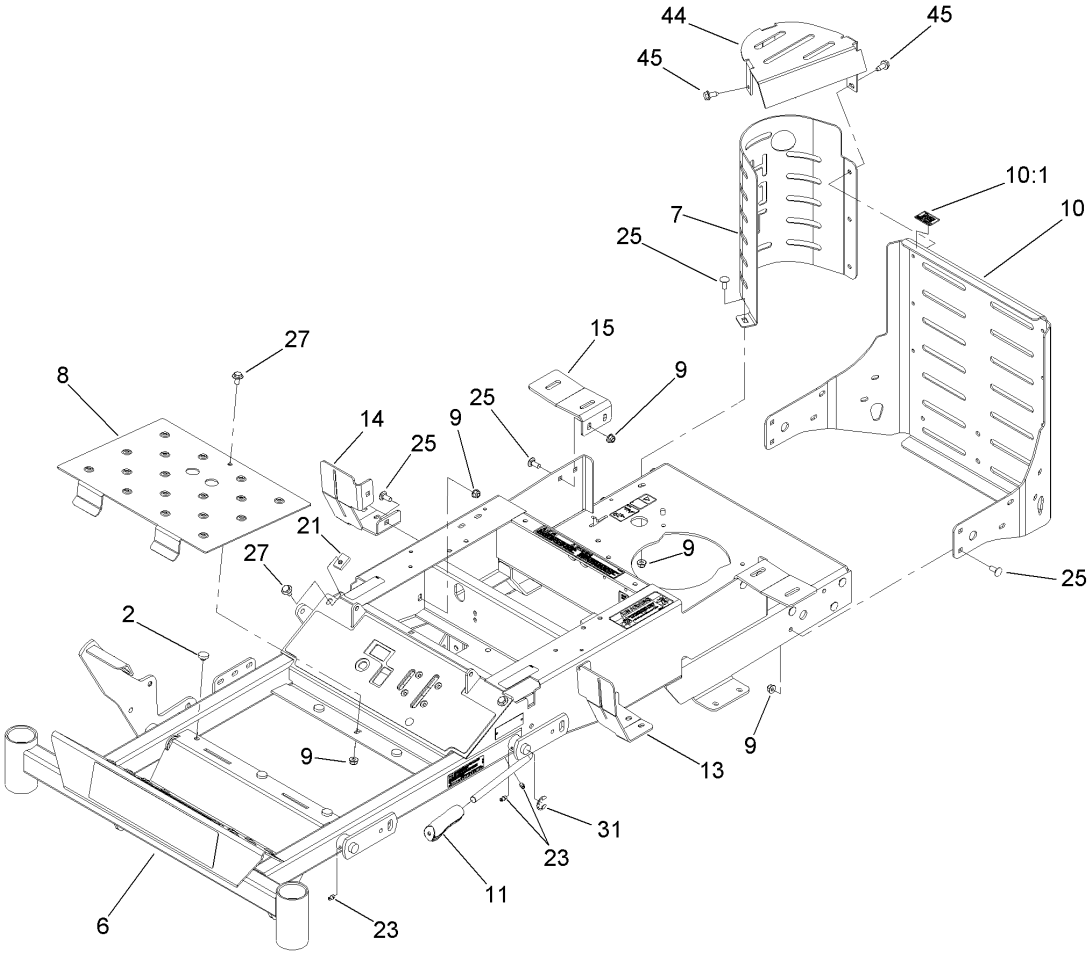

Frame Assembly

Ref	Part No.	Qty.	Description
2	1-513658	5	Bumper
6	114-0525	1	Frame ASM
7	103-9343-03	1	Guard-Muffler
8	103-9381-03	1	Plate, Floor
9	104-8300	19	Nut-Flange, NI
10	114-0543	1	Rear Guard ASM
10:1	93-8069	1	Decal-Surface, Hot
11	109-0375	1	Grip-Lever, Brake
13	109-2421-03	1	Mount-Tank, Fuel (LH)
14	109-2422-03	1	Mount-Tank, Fuel (RH)
15	109-2429-03	2	Bracket-Fuel Tank, Rear
21	109-2605	2	Motion Stop
23	302-19	5	Fitting-Grease
25	3230-23	17	Screw-CARR
27	3234-7	3	Screw-HHF
31	32151-48	1	E-Ring
44	114-0481-03	1	Shield Heat
45	32144-70	5	Screw-HWHTF

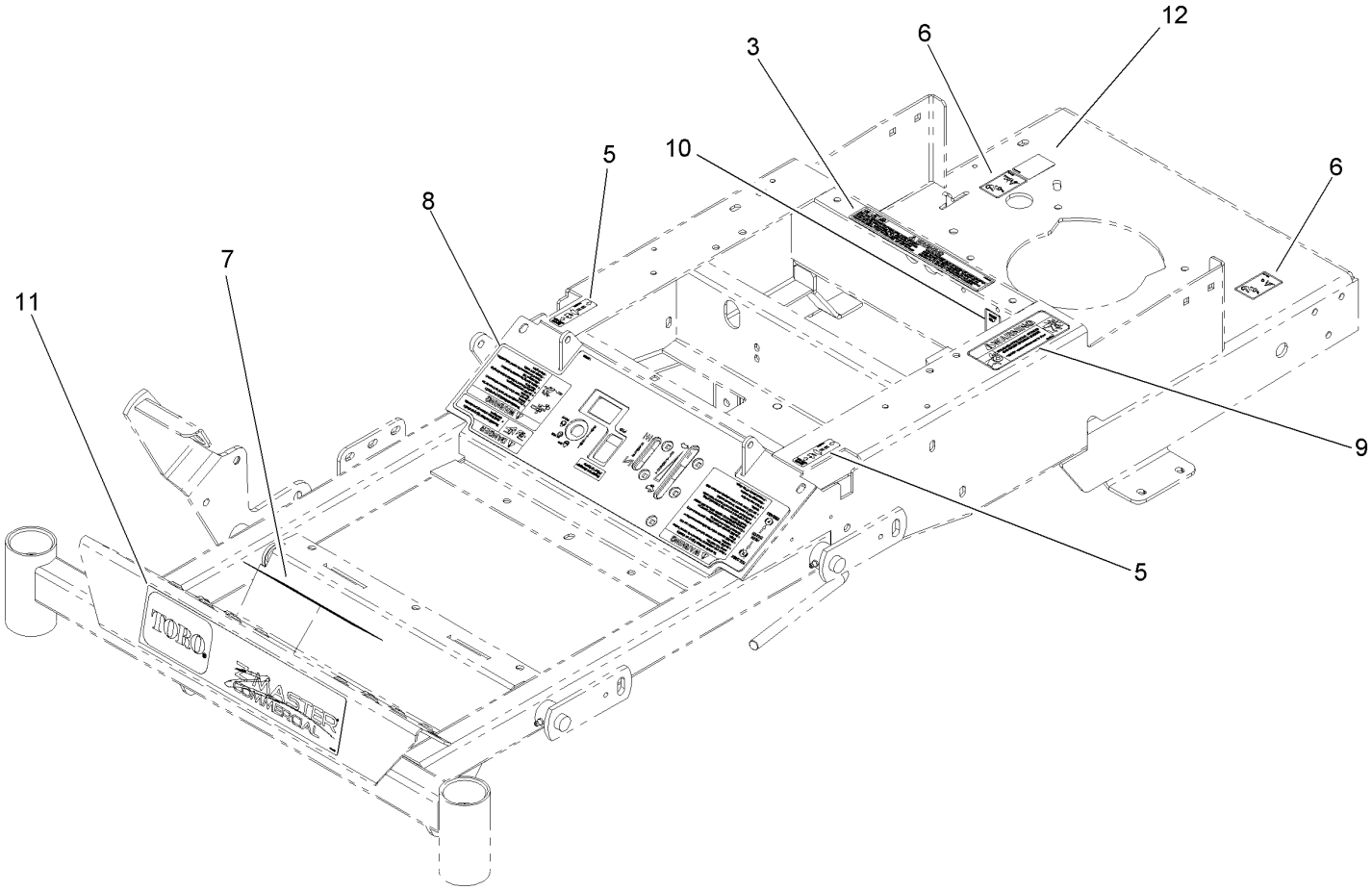

Frame Decal Assembly No. 114-0525

Ref	Part No.	Qty.	Description
3	1-513747	1	Decal-Battery
5	99-8936	2	Decal-Control, Motion
6	112-3854	2	Decal-Transport, Ce
7	109-2490	1	Decal-Slope, Danger
8	112-3833	1	Decal-Console
9	109-2862	1	Decal-Devices, Rotating
10	109-2539	1	Decal-Relay
11	112-3837	1	Decal
12	93-8069	1	Decal-Surface, Hot

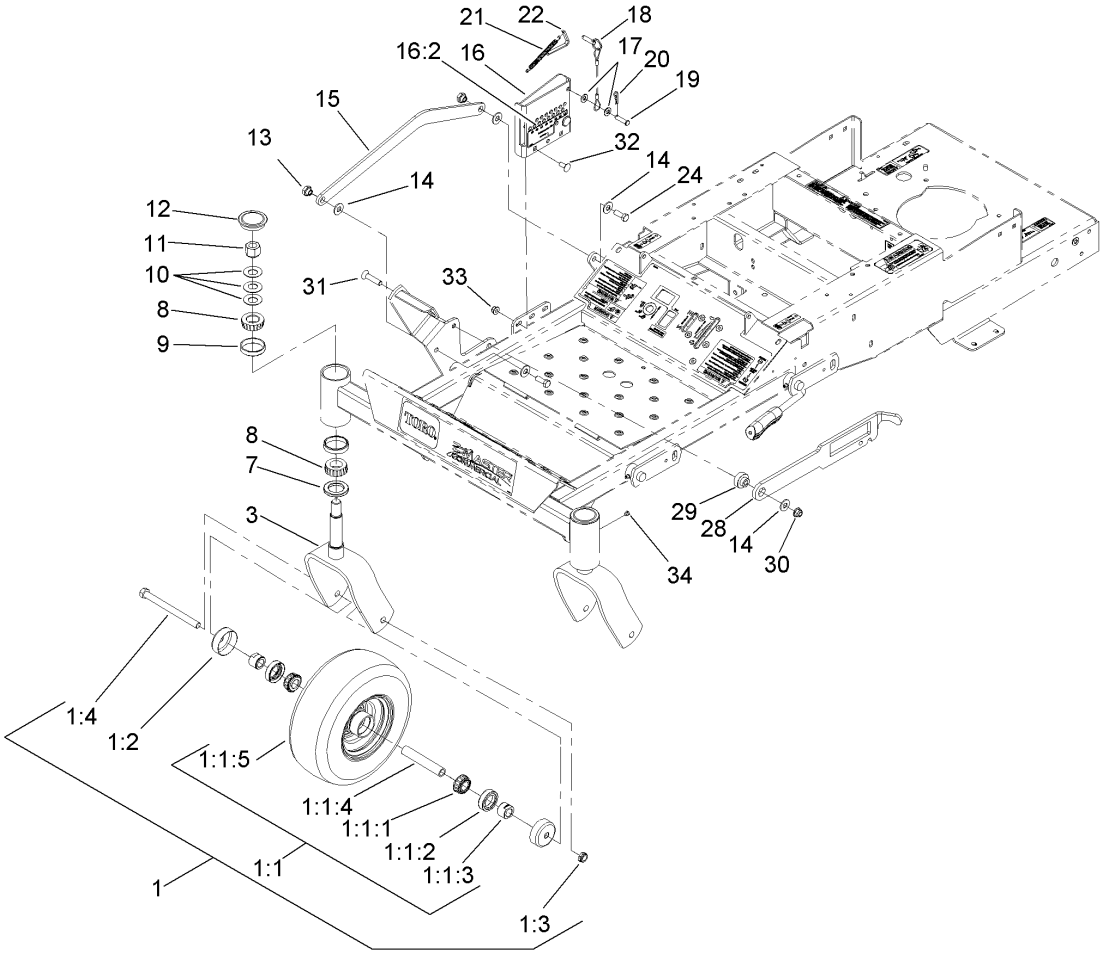

Caster Wheel and Height-of-Cut Assembly

Ref	Part No.	Qty.	Description
1	112-3810	2	Wheel And Bearing ASM
❷1:1		1	Wheel Bearing ASM
1:1:1	1-633585	2	Bearing-Cone, Taper
1:1:2	103-0063	2	Seal-Caster
1:1:3	103-3051	2	Spacer-Nut
1:1:4	103-3157	1	Axle-Caster
1:1:5	110-9965	1	Wheel And Tire ASM
1:2	103-2768	2	Guard-Seal
1:3	3296-45	1	Nut-Lock, NI
1:4	325-20	1	Screw-HH
3	103-8618-01	2	Fork-Caster
7	1-543511	2	Seal-Grease
8	1-543509	4	Bearing-Roller, Tapered
9	1-543508	4	Cup-Bearing
10	1-633508	6	Washer-Bellville
11	3296-51	2	Nut-Lock, NI
12	103-4882	2	Cap-Grease
13	103-9933	2	Nut-Shoulder
14	63-8410	5	Washer
15	103-9932	1	Link-Control, Deck
16	109-3544	1	Height Adjust ASM
16:2	109-2463	1	Decal-Height, Deck
17	1-303334	2	Washer-Spring
18	109-3323	1	Height Pin W/Lanyard ASM

Ref	Part No.	Qty.	Description
19	283-6	1	Pin-Clevis
20	1-806003	1	Pin-Hair
21	109-2416	1	Spring-Adjust, Height
22	109-2620	1	Pawl-Control, Height
24	323-6	2	Screw-HH
28	109-2410	1	Bar-Adjust, Height
29	103-9934	1	Bushing
30	104-8301	1	Nut-Flange, NI
31	3289-19	1	Screw-FH
32	3230-23	2	Screw-CARR
33	104-8300	2	Nut-Flange, NI
34	1-811010	2	Plug

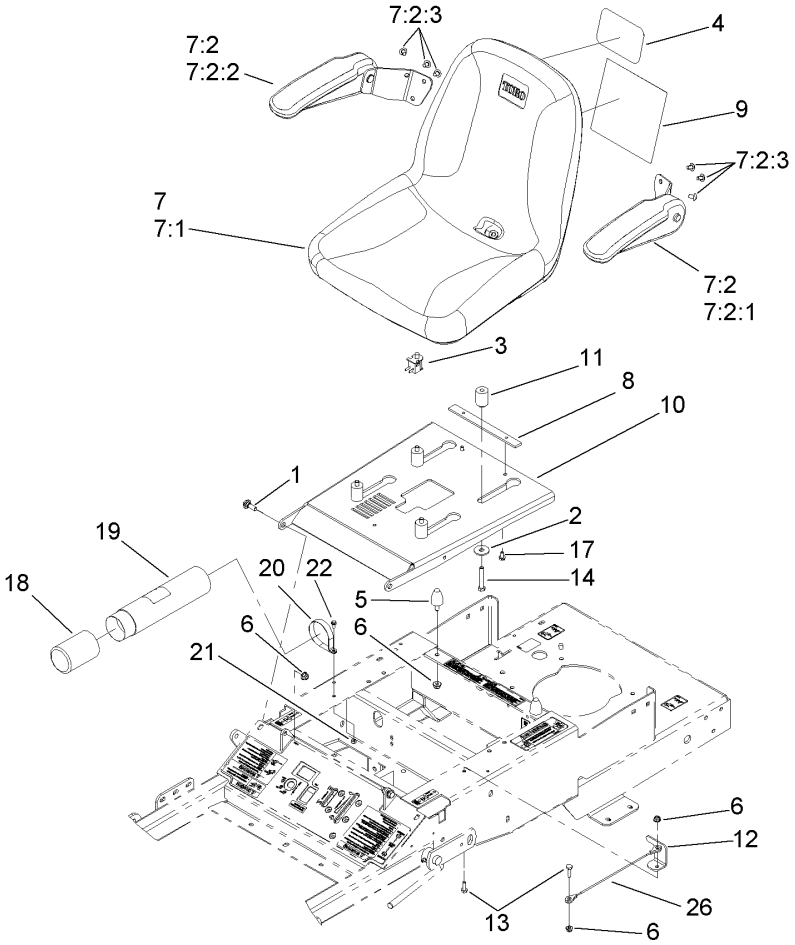

Seat Assembly

Ref	Part No.	Qty.	Description
1	27-0410	2	Screw-Shoulder
2	63-8410	4	Washer
3	82-2190	1	Switch-Bail
4	94-2579	1	Decal
5	103-9376	2	Bumper-Seat
6	104-8300	4	Nut-Flange, NI
7	112-3845	1	Seat (With Arm Rests)
7:1	112-3846	1	Seat
7:2	108-6163	1	Armrest Kit
7:2:1	110-6569	1	LH Armrest Kit
7:2:2	110-6570	1	RH Armrest Kit
7:2:3	108-6179	6	Screw-HSBH
8	109-2427-03	1	Bar-Stop, Seat
9	112-3836	1	Decal-Service
10	109-2607-03	1	Bracket-Seat
11	109-2608	4	Spacer
12	114-0507	1	Bracket-Seat Holdown
13	321-6	2	Screw-HH
14	322-10	4	Screw-HH
17	32144-4	2	Screw-HWH
18	104-7048	1	Cap-Housing
19	104-7050	1	Housing-Manual
20	2412-120	1	R-Clamp
21	3296-2	1	Nut-Lock

Ref	Part No.	Qty.	Description
22	3290-321	1	Screw-HWH
26	109-2628	1	Cable-Stop, Seat

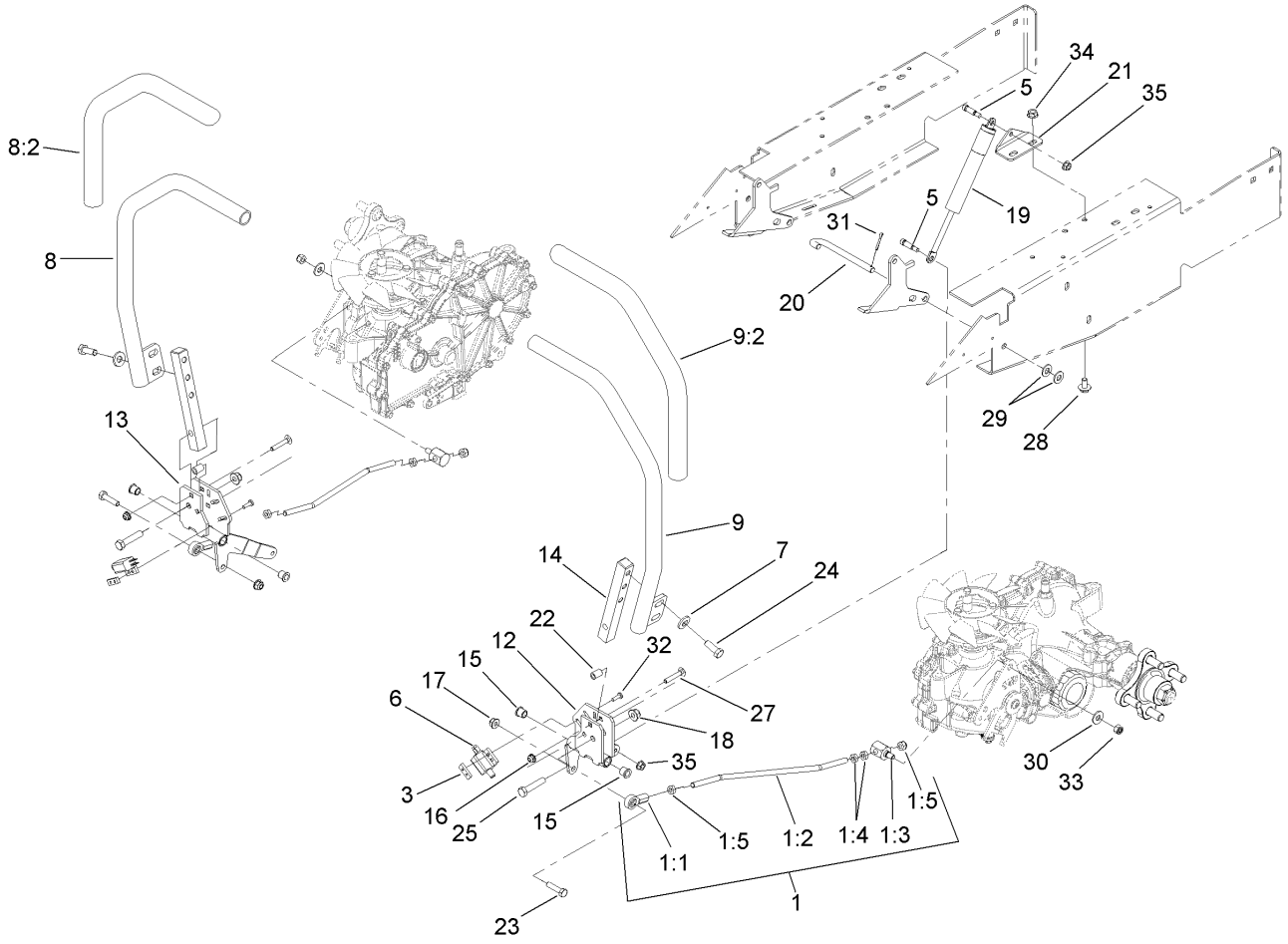

Motion Control Assembly

Ref	Part No.	Qty.	Description
❷1		2	Steering Rod ASM
1:1	1-543017	1	Balljoint-RH
1:2	103-9407	1	Rod-Steering, LH
1:3	103-9373	1	Trunnion
1:4	3220-2	3	Nut-Jam
1:5	3296-4	1	Nut-Lock
3	1-633181	2	Plate-Tapped
5	1-809057	4	Screw-HSH
6	65-7410	2	Switch-Pole, Single
7	98-5975	4	Washer-Belleville
8	112-3814	1	RH Control Lever ASM
8:2	108-5213	1	Grip-Foam
9	112-3815	1	LH Control Lever ASM
9:2	108-5213	1	Grip-Foam
12	103-9411	1	Control-Steering, RH
13	103-9413	1	Control-Steering, LH
14	103-9414	2	Mount-Post, Lever
15	103-9928	4	Bearing
16	104-7201	4	Nut-HF
17	104-8300	2	Nut-Flange, NI
18	104-8301	2	Nut-Flange, NI
19	109-2339	2	Damper-Control, Motion
20	109-2423	2	Shaft-Pivot, Control
21	109-2428	2	Bracket-Damper

Ref	Part No.	Qty.	Description
22	1-633545	4	Spacer
23	322-6	2	Screw-HH
24	323-6	4	Screw-HH
25	323-9	2	Screw-HH
27	3229-4	4	Screw-CARR
28	3234-7	4	Screw-HHF
29	3256-24	2	Washer-Flat
30	3256-3	2	Washer-Flat
31	3272-10	2	Pin-Cotter
32	3290-500	4	Screw-PPH
33	3296-4	2	Nut-Lock
34	32128-20	4	Nut-HF
35	32128-33	4	Nut-HF

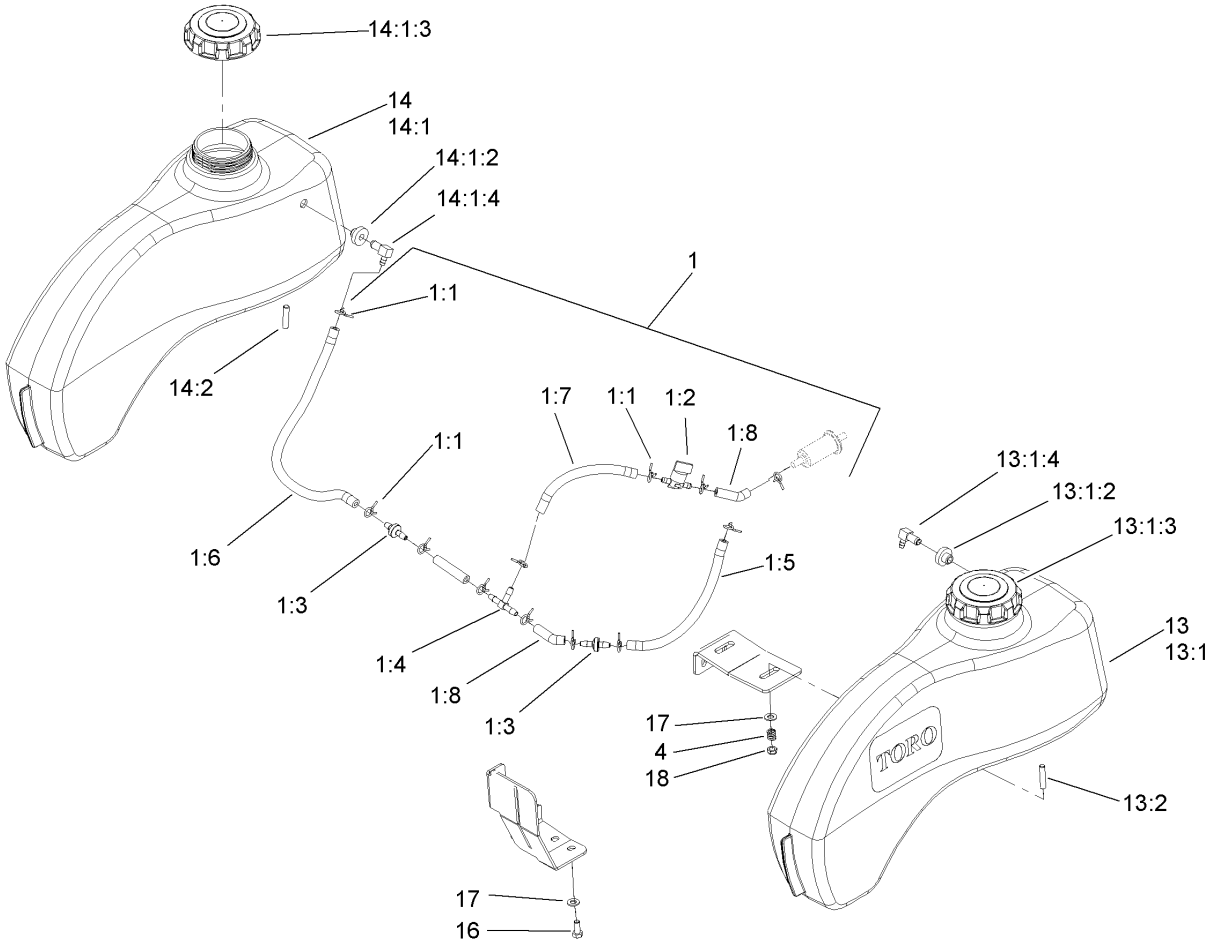

Fuel Tank Assembly

Ref	Part No.	Qty.	Description
❷1		1	Fuel Line ASM
1:1	1-303077	12	Clamp
1:2	1-603770	1	Valve-Fuel
1:3	99-5000	2	Valve-Check, Fuel
1:4	99-5005	1	Fitting-Tee, Barbed
1:5	107-7684	1	Hose-Fuel
1:6	108-4582	1	Hose-Fuel
1:7	109-0293	1	Hose-Fuel
1:8	109-0304	3	Hose-Fuel
4	1-633349	4	Spring-Tank, Fuel
13	112-3780	1	LH Tank ASM (W/Studs)
❷13:1		1	LH Tank ASM
13:1:2	104-7789	1	Bushing
13:1:3	109-0346	1	Cap-Fuel, Gas
13:1:4	109-2420	1	Fitting-Fuel (W/Line And Screen)
13:2	1-633023	2	Stud
14	112-3783	1	RH Tank ASM (W/Studs)
❷14:1		1	RH Tank ASM
14:1:2	104-7789	1	Bushing
14:1:3	109-0346	1	Cap-Fuel, Gas
14:1:4	109-2420	1	Fitting-Fuel (W/Line And Screen)
14:2	1-633023	2	Stud
16	322-3	2	Screw-HH
17	3256-23	6	Washer-Flat

Ref	Part No.	Qty.	Description
18	3296-47	4	Nut-Lock, NI

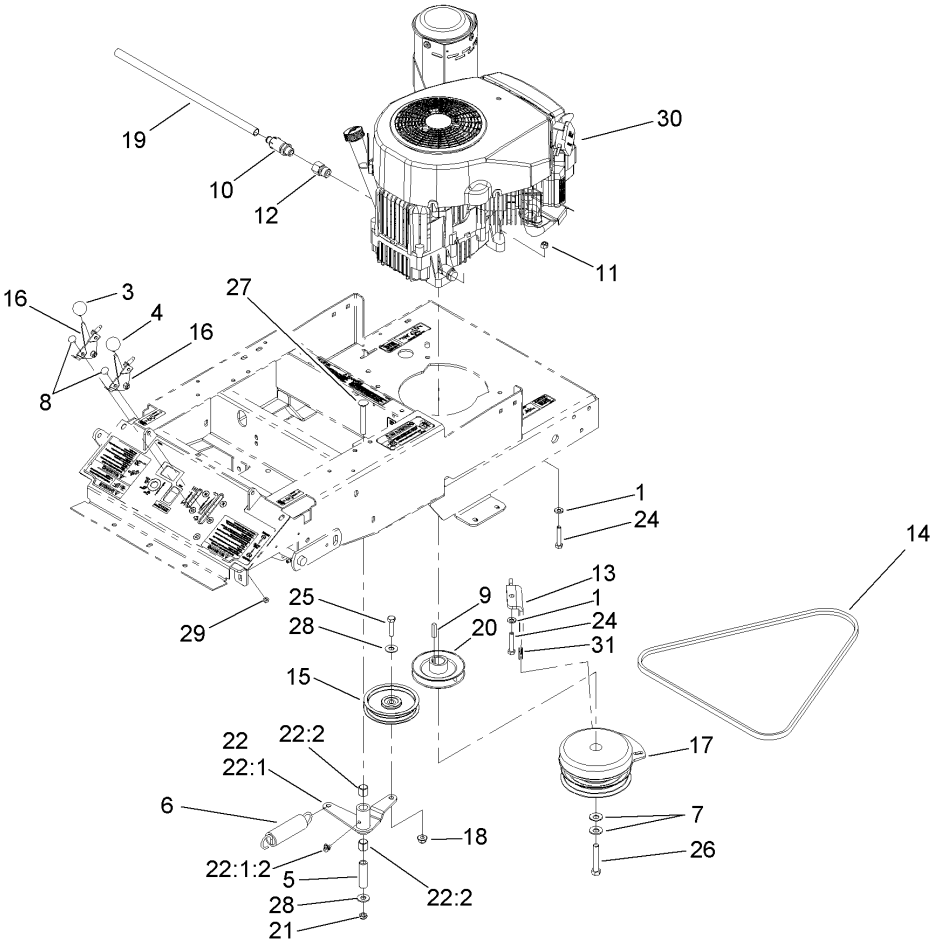

Engine Mounting Assembly

Ref	Part No.	Qty.	Description
1	1-303334	4	Washer-Spring
3	1-513592	1	Knob-Ball
4	1-513593	1	Knob-Ball, Black
5	1-603384	1	Bushing-Pivot, Idler
6	108-4056	1	Spring-Extension
7	1-603610	2	Washer-Spring
8	1-807513	4	Bolt-CARR
9	13-2840	1	Key-Square
10	92-6877	1	Valve-Drain, Oil
11	3296-29	4	Nut-Lock, NI
12	103-1966	1	Adapter
13	103-9356-03	1	Rotation-Stop, Clutch
14	112-3799	1	Belt-V
15	103-9401	1	Idler
16	103-9946	2	Throttle Control ASM
17	103-9950	1	Clutch
18	104-8301	1	Nut-Flange, NI
19	106-7022	1	Tube-Drain, Oil
20	109-0393	1	Pulley-Engine
21	3296-59	1	Nut-Lock, NI
22	109-3119	1	Idler Hydro ASM
❷22:1		1	Arm-Idler
22:1:2	302-40	1	Fitting-Grease
22:2	1-513034	2	Sleeve-Bearing

Ref	Part No.	Qty.	Description
24	322-9	4	Screw-HH
25	323-8	1	Screw-HH
26	3212-10	1	Screw-HH
27	3231-10	1	Screw-CARR
28	3256-4	2	Washer-Flat
29	3296-2	4	Nut-Lock
❷❸30		1	Engine-Kawasaki, FH580V-As40-R
31	109-3765	1	Bumper

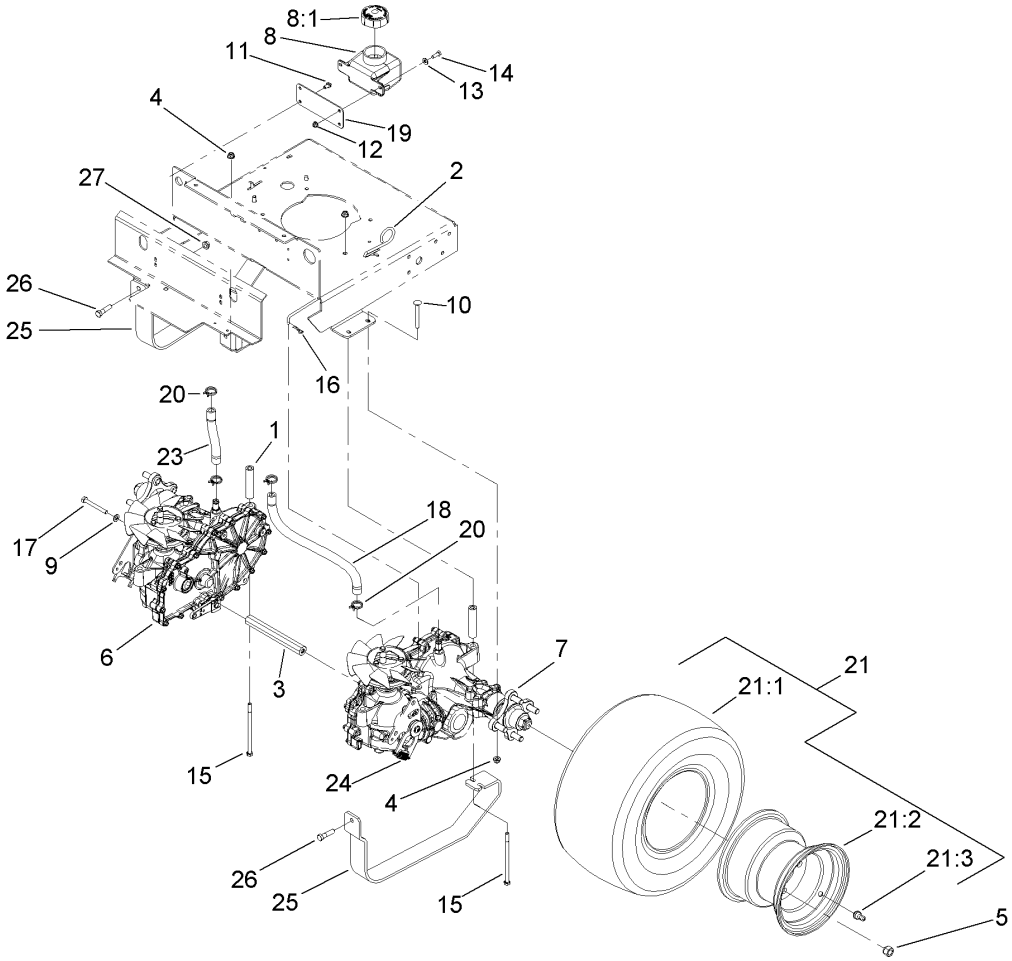

Hydraulic Drive Assembly

Ref	Part No.	Qty.	Description
1	103-9397	2	Spacer-Hydro
2	103-9380	2	Rod-Bypass, Hydro
3	103-9398	1	Spacer-Axle
4	104-8300	6	Nut-Flange, NI
5	242-50	8	Nut-Lug
6	109-5846	1	Transmission-RH
7	109-5847	1	Transmission-LH
8	109-2250	1	Vent-Tank, Hydro
8:1	109-3320	1	Cap-Reservoir, Hydraulic
9	98-5975	2	Washer-Belleville
10	3230-9	4	Screw-CARR
11	32144-4	2	Screw-HWH
12	104-7201	2	Nut-HF
13	3256-22	2	Washer-Flat
14	321-4	2	Screw-HH
15	1-800286	2	Screw-Hhc
16	1-806003	2	Pin-Hair
17	323-11	2	Screw-HH
18	109-3459	1	Hose-HYD
19	103-9350-03	1	Plate-Mount, Tank
20	109-3322	4	Clamp-Hose
21	112-3795	2	Wheel And Tire
21:1	112-3798	1	Tire
21:2	217-60	1	Rim

Ref	Part No.	Qty.	Description
21:3	232-27	1	Stem-Valve
❶21:99	232-37	1	Tube
23	109-3319	1	Hose-HYD
24	109-2631	2	Spring-Return, Neutral
25	114-0469-03	2	Guard-Transmission
26	323-8	2	Screw-HH
27	3290-357	2	Nut-HHF, Whiz

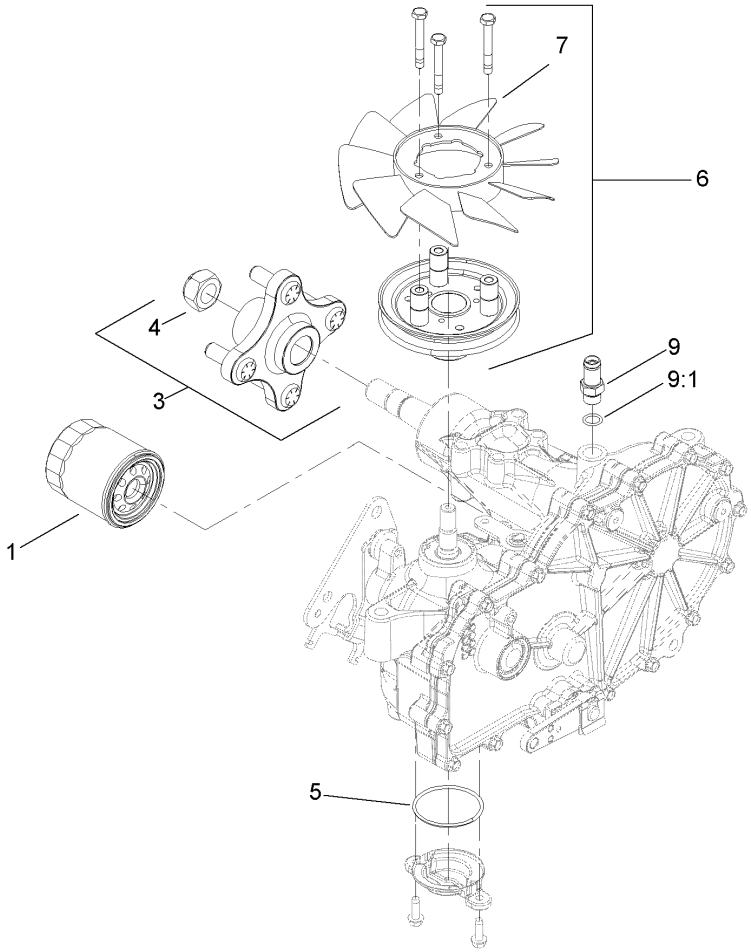

RH Transmission Assembly No. 109-5846

Ref	Part No.	Qty.	Description
1	109-3321	1	Element-Oil Filter, HYD
❶2	109-3537	1	Complete Seal Kit
3	109-3538	1	Hub-Kit
4	109-3536	1	Nut-Hub
5	109-3540	1	O-Ring-Seal, Charge Cover
6	109-3541	1	Fan And Pulley Kit
7	109-3542	1	Fan
9	109-3278	1	Adapter-Straight
9:1	1-603921	1	O-Ring

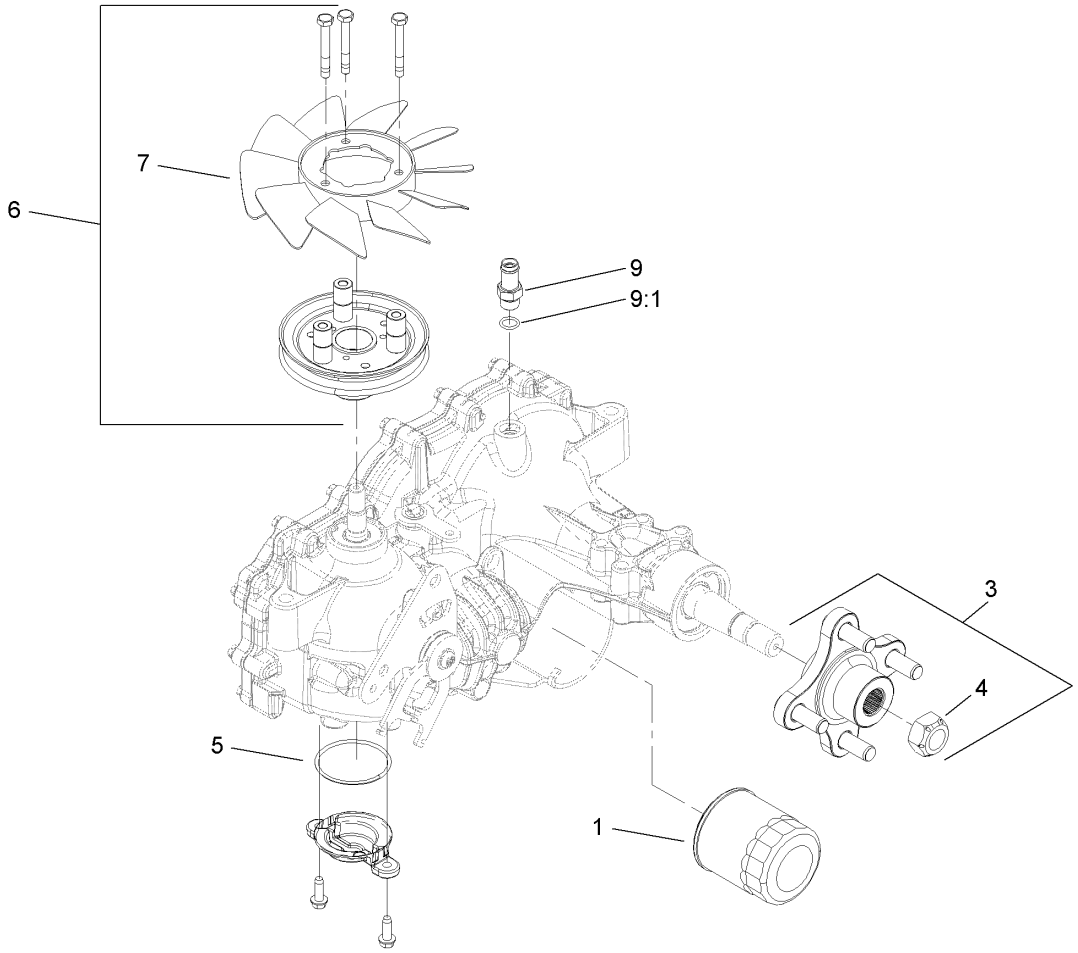

LH Transmission Assembly No. 109-5847

Ref	Part No.	Qty.	Description
1	109-3321	1	Element-Oil Filter, HYD
❶2	109-3537	1	Complete Seal Kit
3	109-3538	1	Hub-Kit
4	109-3536	1	Nut-Hub
5	109-3540	1	O-Ring-Seal, Charge Cover
6	109-3541	1	Fan And Pulley Kit
7	109-3542	1	Fan
9	109-3278	1	Adapter-Straight
9:1	1-603921	1	O-Ring

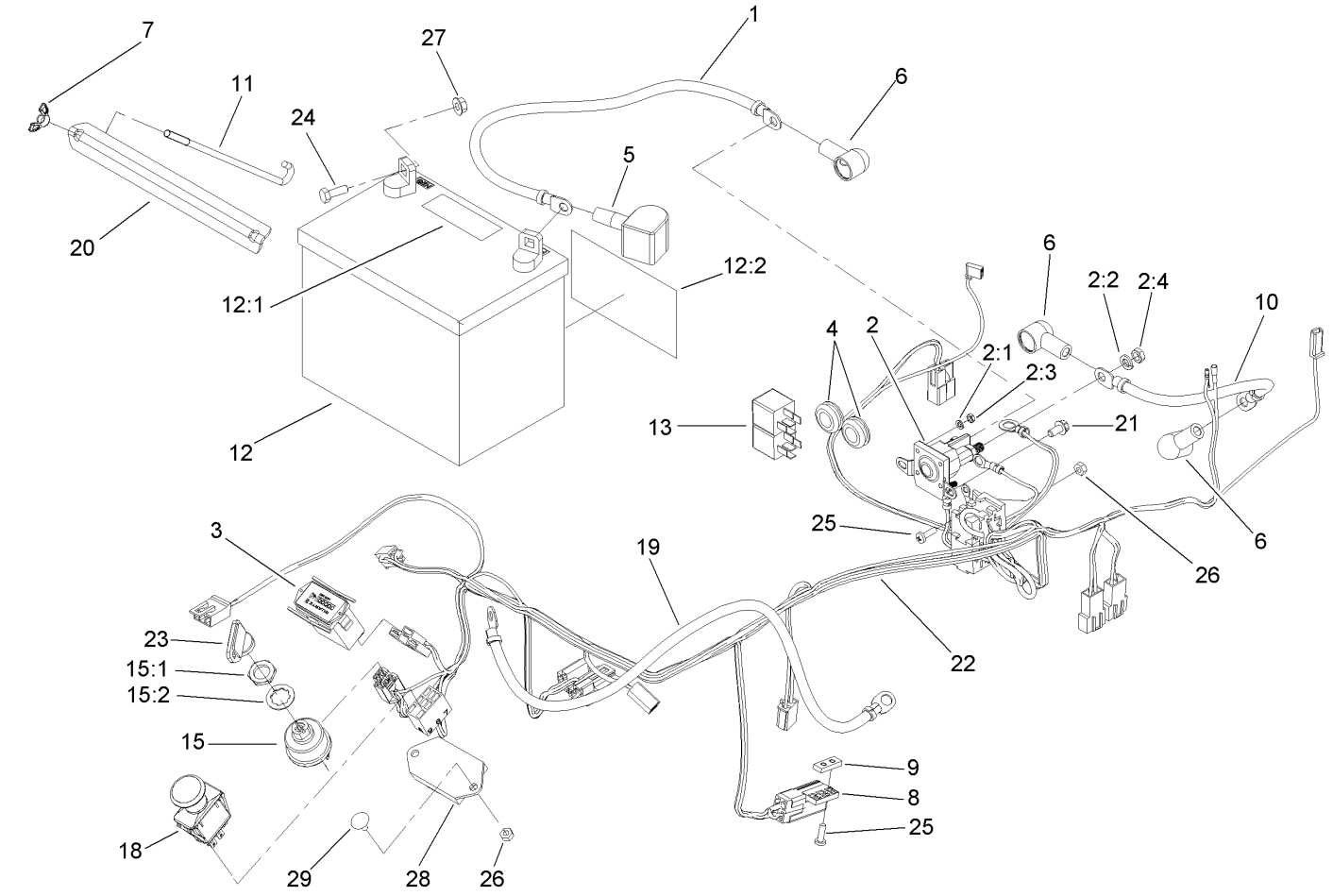

Electrical Assembly

Ref	Part No.	Qty.	Description
1	1-513053	1	Cable-Battery, Positive
2	1-513075	1	Switch-Solenoid
2:1	3253-17	2	Washer-Lock
2:2	3253-4	2	Washer-Lock
2:3	3219-14	2	Nut-Hex
2:4	3220-2	2	Nut-Jam
3	1-513374	1	Meter-Hour
4	1-543296	2	Grommet
5	1-543391	1	Insulator-Battery
6	1-543393	3	Insulator-Solenoid
7	1-543792	2	Wingnut
8	1-633111	1	Switch
9	1-633181	1	Plate-Tapped
10	1-633306	1	Cable-Starter, Positive
11	1-633651	2	Bolt-Holddown
12	105-1692	1	Battery
12:1	104-4163	1	Decal-Battery
12:2	104-4164	1	Decal-Battery
13	1-643275	2	Relay
15	104-2541	1	Switch-Key
15:1	218-461	1	Nut-HH
15:2	3254-5	1	Washer-Tooth
18	103-5221	1	Switch-PTO
19	103-8355	1	Cable-Battery, Negative

Ref	Part No.	Qty.	Description
20	103-9944-03	1	Angle-Battery
21	32144-4	2	Screw-HWH
22	109-4112	1	Harness-Wire
23	63-8360	1	Key-Ignition
24	321-4	2	Screw-HH
25	3290-500	6	Screw-PPH
26	3296-2	5	Nut-Lock
27	32128-33	2	Nut-HF
28	100-6186	1	Module-Delay, Seat
29	1-807513	1	Bolt-CARR

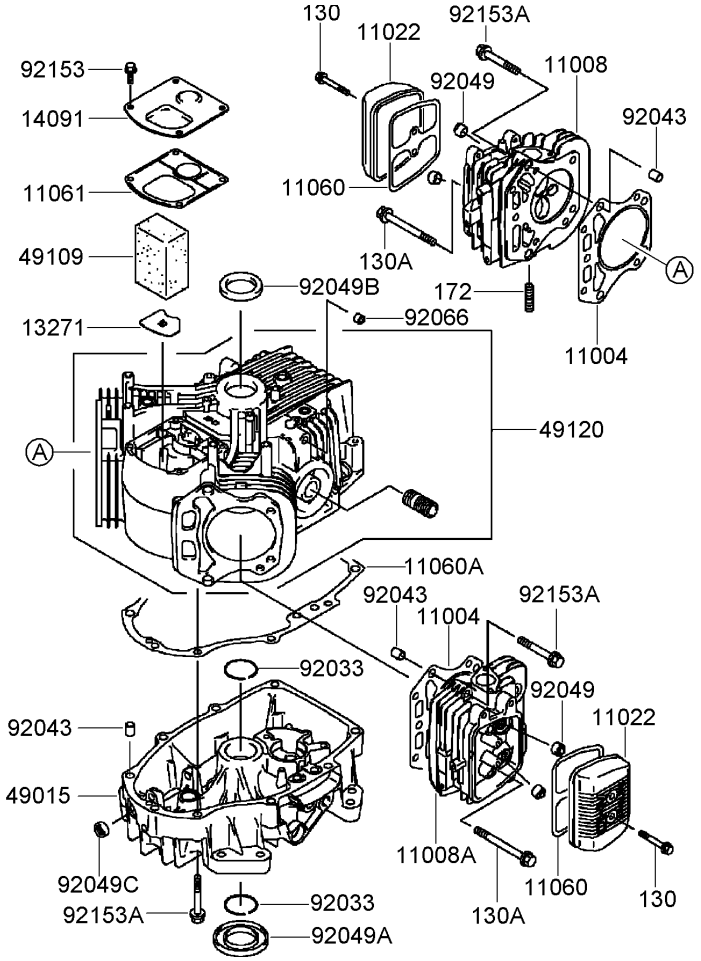

Cylinder and Crankcase Assembly
Kawasaki FH580V-AS40-R

Ref	Part No.	Qty.	Description
❸11004	11004-7016	2	Gasket-Head
❸11008	11008-6043	1	Head-Cylinder, No. 1
❸11008A	11008-7020	1	Head-Cylinder, No. 2
❸11022	11022-7003	2	Case-Rocker
❸11060	11060-7001	2	Gasket-Case, Rocker
❸11060A	11060-7008	1	Gasket-Cover, Crankcase
❸11061	11061-7001	1	Gasket-Breather
❸13271	13271-7016	1	Plate
❸14091	14091-7006	1	Cover
❸49015	49015-6253	1	Cover-Crankcase
❸49109	49109-7002	1	Element-Breather
❸49120	49120-7023	1	Crankcase
❸92033	92033-7003	2	Ring-Snap
❸92043	92043-7001	6	Pin
❸92049	92049-7001	4	Seal-Oil, R V C2 (6X11X10.2)
❸92049A	92049-7015	1	Seal-Oil, S D (35X62X8 L HSH)
❸92049B	92049-7016	1	Seal-Oil, S D (35X48X8 R HSH)
❸92049C	92049-7019	1	Seal-Oil, S O (8X14X5 HSH)
❸92066	92066-7002	1	Plug
❸92153	92153-7043	4	Bolt (6X12)
❸92153A	92153-7054	17	Bolt (8X50)
❸130	130B0640	4	Bolt-Flanged (6X40)
❸130A	130CA0875	2	Bolt-Flanged (8X75)
❸172	172G0818	4	Bolt-Stud (8X18)

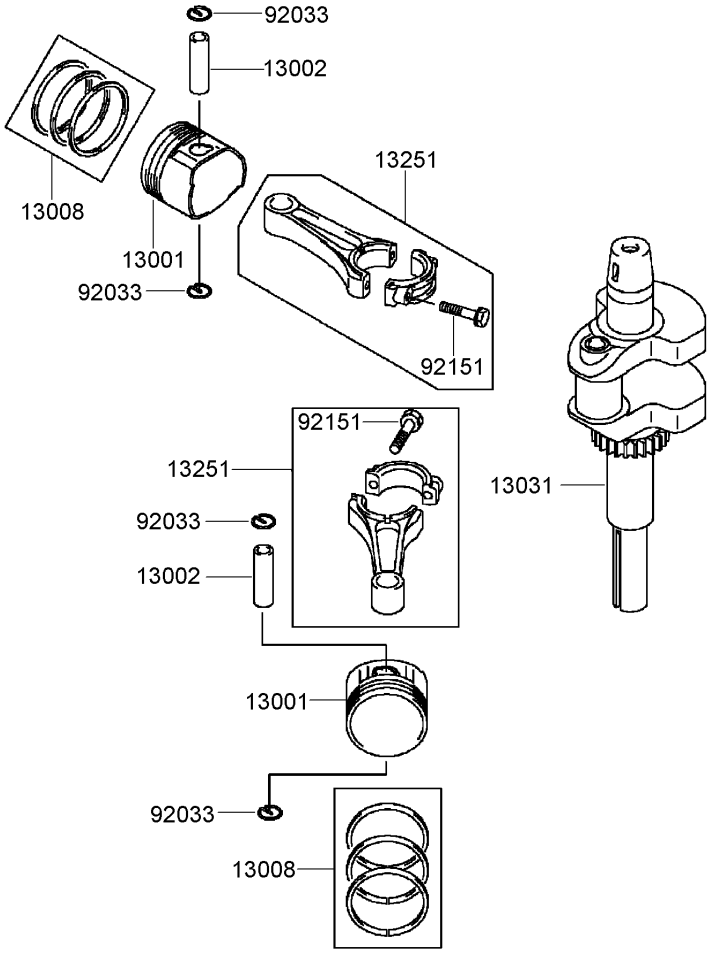

Piston and Crankshaft Assembly
Kawasaki FH580V-AS40-R

Ref	Part No.	Qty.	Description
❸13001	13001-7010	2	Piston-Engine
❸13002	13002-7001	2	Pin-Piston
❸13008	13008-6060	2	Ring Set-Piston
❸13031	13031-7036	1	Crankshaft
❸13251	13251-7010	2	Connecting Rod ASM
❸92033	92033-7002	4	Ring-Snap
❸92151	92151-7017	4	Bolt (6X35)

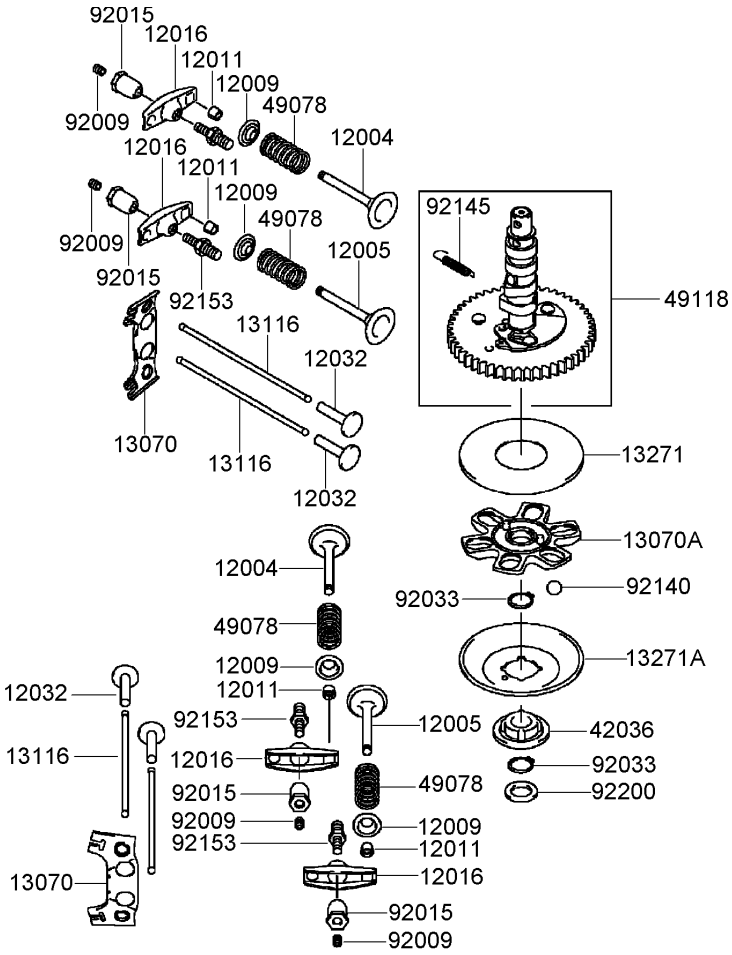

Valve and Camshaft Assembly
Kawasaki FH580V-AS40-R

Ref	Part No.	Qty.	Description
❸12004	12004-7003	2	Valve-Intake
❸12005	12005-7003	2	Valve-Exhaust
❸12009	12009-7001	4	Retainer-Spring, Valve
❸12011	12011-2056	8	Collet
❸12016	12016-7008	4	Arm-Rocker
❸12032	12032-7001	4	Tappet
❸13070	13070-7001	2	Guide
❸13070A	13070-7004	1	Guide
❸13116	13116-2057	4	Rod-Push
❸13271	13271-7007	1	Plate
❸13271A	13271-7021	1	Plate-Governor
❸42036	42036-7010	1	Sleeve
❸49078	49078-7001	4	Spring-Valve, Engine
❸49118	49118-7004	1	Camshaft
❸92009	92009-2341	4	Screw
❸92015	92015-2253	4	Nut
❸92033	92033-7001	2	Ring-Snap
❸92140	92140-7002	6	Ball
❸92145	92145-7001	1	Spring
❸92153	92153-7019	4	Bolt
❸92200	92200-7001	1	Washer

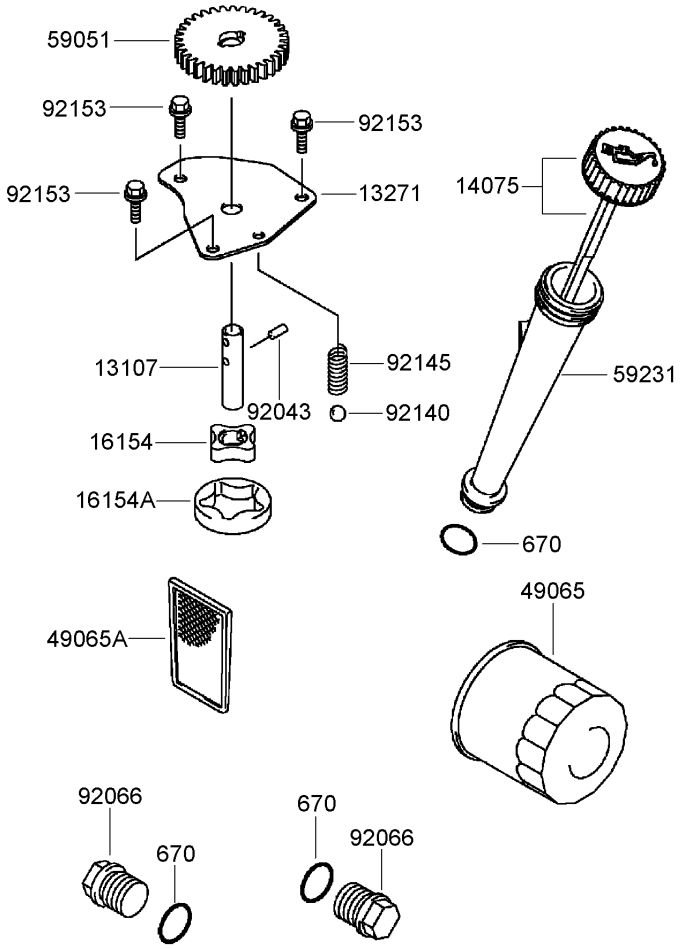

Lubrication Equipment Assembly
Kawasaki FH580V-AS40-R

Ref	Part No.	Qty.	Description
❸13107	13107-7009	1	Shaft
❸13271	13271-7017	1	Plate
❸14075	14075-7009	1	Cap ASM
❸16154	16154-2053	1	Rotor-Pump (In)
❸16154A	16154-2054	1	Rotor-Pump (Out)
❸49065	49065-2078	1	Filter-Oil
❸49065A	49065-7004	1	Filter-Oil
❸59051	59051-7011	1	Gear-Spur
❸59231	59231-7005	1	Filler
❸92043	92043-7003	2	Pin
❸92066	92066-7003	2	Plug
❸92140	92140-7003	1	Ball
❸92145	92145-7002	1	Spring
❸92153	92153-7043	3	Bolt (6X12)
❸670	670D2016	3	O-Ring (16Mm)

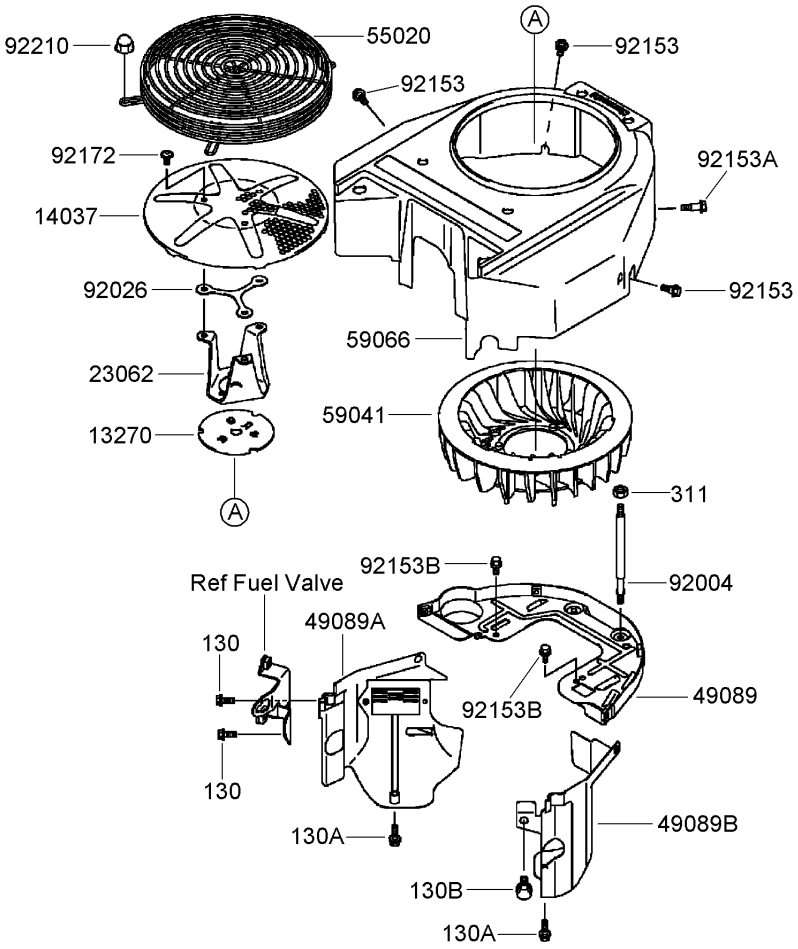

Cooling Equipment Assembly
Kawasaki FH580V-AS40-R

Ref	Part No.	Qty.	Description
❸13270	13270-7007	1	Plate
❸14037	14037-7020-9H	1	Screen
❸23062	23062-7010	1	Bracket
❸49089	49089-7032	1	Shroud-Engine
❸49089A	49089-7042	1	Shroud-Engine
❸49089B	49089-7043	1	Shroud-Engine
❸55020	55020-7004	1	Guard
❸59041	59041-7012	1	Fan
❸59066	59066-7037	1	Housing-Fan
❸92004	92004-7006	2	Stud
❸92026	92026-7007	1	Spacer
❸92153	92153-7007	3	Bolt
❸92153A	92153-7008	1	Bolt
❸92153B	92153-7043	2	Bolt (6X12)
❸92172	92172-7029	3	Screw-Socket (6X12)
❸92210	92210-0003	4	Nut
❸130	130B0616	2	Bolt-Flanged (6X16)
❸130A	130B0625	2	Bolt-Flanged (6X25)
❸130B	130B0816	1	Bolt-Flanged (8X16)
❸311	311B0600	2	Nut-Hex (6Mm)

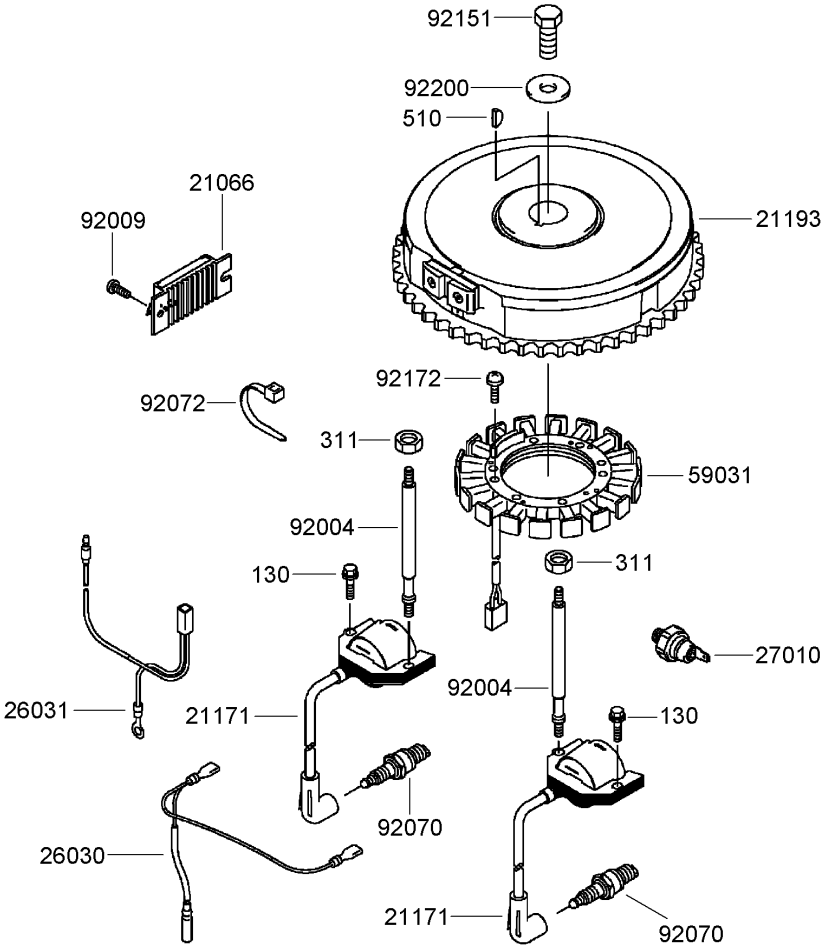

Electric Equipment Assembly
Kawasaki FH580V-AS40-R

Ref	Part No.	Qty.	Description
❸21066	21066-7011	1	Regulator-Voltage
❸21171	21171-7013	2	Ignition Coil ASM
❸21193	21193-7007	1	Flywheel ASM
❸26030	26030-7001	1	Harness
❸26031	26031-7012	1	Harness
❸27010	27010-7001	1	Switch
❸59031	59031-7009	1	Coil-Charging
❸92004	92004-7009	2	Stud
❸92009	92009-2308	1	Screw
❸92070	92070-7003	2	Plug-Spark (R C J 8 Y, Solid)
❸92072	92072-7003	3	Band
❸92151	92151-2097	1	Bolt (12X30)
❸92172	92172-7018	4	Screw (5X20)
❸92200	92200-7002	1	Washer
❸130	130B0620	2	Bolt-Flanged (6X20)
❸311	311B0600	2	Nut-Hex (6Mm)
❸510	510A5100	1	Key-Woodruff

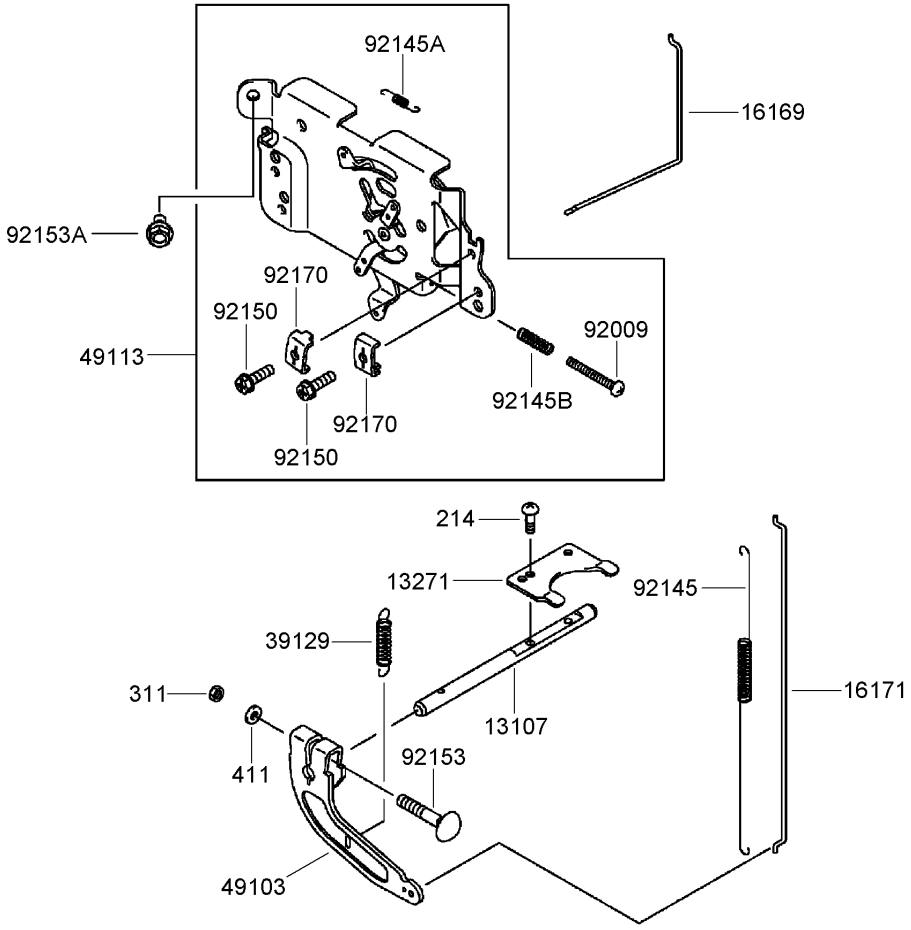

Control Equipment Assembly
Kawasaki FH580V-AS40-R

Ref	Part No.	Qty.	Description
❸13107	13107-7010	1	Shaft
❸13271	13271-7032	1	Plate
❸16169	16169-7010	1	Link-Choke
❸16171	16171-7001	1	Link
❸39129	39129-7003	1	Spring-Governor
❸49103	49103-7004	1	Arm-Governor
❸49113	49113-7011	1	Panel-Control
❸92009	92009-7007	1	Screw (4X35)
❸92145	92145-7003	1	Spring
❸92145A	92145-7004	1	Spring
❸92145B	92145-7005	1	Spring
❸92150	92150-2182	2	Bolt (5X18)
❸92153	92153-7033	1	Bolt (6X35)
❸92153A	92153-7043	2	Bolt (6X12)
❸92170	92170-7001	2	Clamp
❸214	214B0408	2	Screw-Pan (4X8)
❸311	311B0600	1	Nut-Hex (6Mm)
❸411	411B0600	1	Washer-Plain (6Mm)

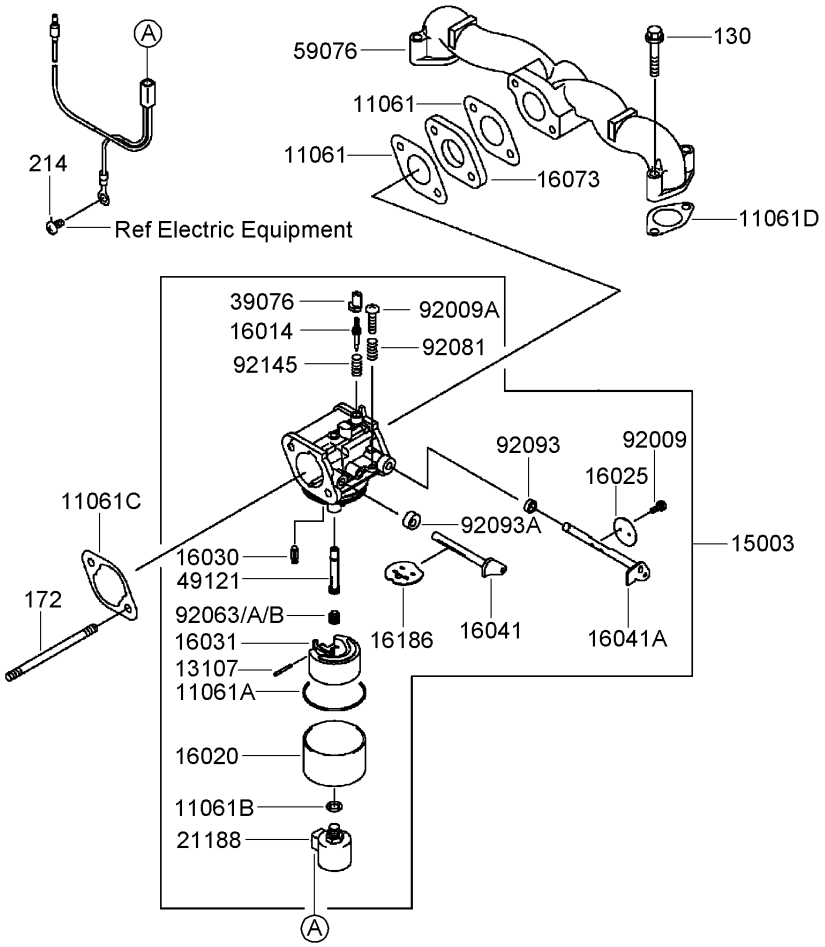

Carburetor Assembly
Kawasaki FH580V-AS40-R

Ref	Part No.	Qty.	Description
❸11061	11061-7004	2	Gasket-Insulator
❸11061A	11061-7009	1	Gasket-Chamber
❸11061B	11061-7010	1	Gasket-Screw
❸11061C	11061-7018	1	Gasket-Cleaner, Air
❸11061D	11061-7019	2	Gasket
❸13107	13107-7018	1	Shaft
❸15003	15003-7100	1	Carburetor ASM
❸16014	16014-7007	1	Screw-Air, Pilot
❸16020	16020-7003	1	Chamber-Float
❸16025	16025-7006	1	Valve-Throttle
❸16030	16030-7003	1	Valve-Float
❸16031	16031-7002	1	Float
❸16041	16041-7016	1	Shaft-Choke, Carburetor
❸16041A	16041-7018	1	Shaft-Throttle, Carburetor
❸16073	16073-7007	1	Insulator
❸16186	16186-7004	1	Choke Valve ASM
❸21188	21188-7002	1	Solenoid
❸39076	39076-7001	1	Limiter
❸49121	49121-7004	1	Nozzle-Main
❸59076	59076-7001	1	Manifold-Intake
❸92009	92009-2083	2	Screw
❸92009A	92009-2349	1	Screw
❸92063	92063-7037	1	Jet-Main (No. 105)
❸92063A	92063-7046	1	Jet-Main (No. 100)

Ref	Part No.	Qty.	Description
❸92063B	92063-7062	1	Jet-Main No. 110
❸92081	92081-2234	1	Spring
❸92093	92093-2100	1	Seal
❸92093A	92093-7003	1	Seal
❸92145	92145-7015	1	Spring
❸130	130B0635	4	Bolt-Flanged (6X35)
❸172	172G0690	2	Bolt-Stud (6X90)
❸214	214B0510	1	Screw-Pan (5X10)

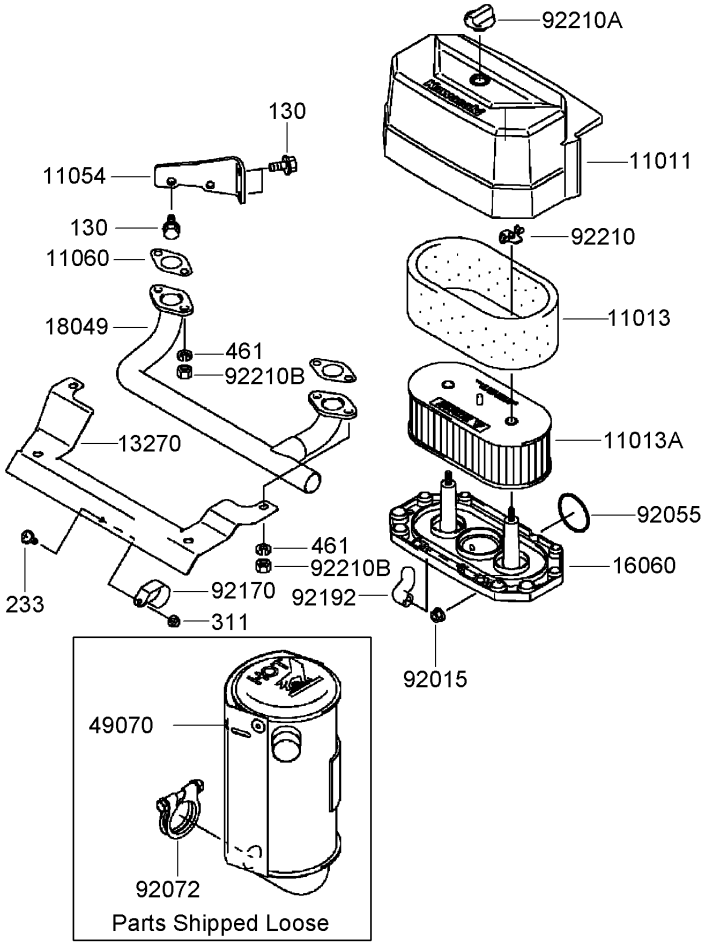

Air Filter and Muffler Assembly
Kawasaki FH580V-AS40-R

Ref	Part No.	Qty.	Description
❸11011	11011-7046	1	Case-Air Filter
❸11013	11013-7025	1	Element-Filter, Air
❸11013A	11013-7031	1	Element-Filter, Air
❸11054	11054-7002-9H	1	Bracket
❸11060	11060-7021	2	Gasket-Muffler
❸13270	13270-7008	1	Plate
❸16060	16060-7016	1	Pipe-Intake
❸18049	18049-7001	1	Pipe-Exhaust
❸49070	49070-7021	1	Muffler
❸92015	92015-1193	2	Nut
❸92055	92055-7015	1	O-Ring
❸92072	92072-7012	1	Band
❸92170	92170-7002	1	Clamp
❸92192	92192-7010	1	Tube
❸92210	92210-7004	2	Nut
❸92210A	92210-7019	1	Nut
❸92210B	92210-7027	4	Nut (M8)
❸130	130B0816	3	Bolt-Flanged (8X16)
❸233	233B0416	1	Screw (4X16)
❸311	311B0400	1	Nut-Hex (4Mm)
❸461	461F0800	4	Washer-Spring (8Mm)

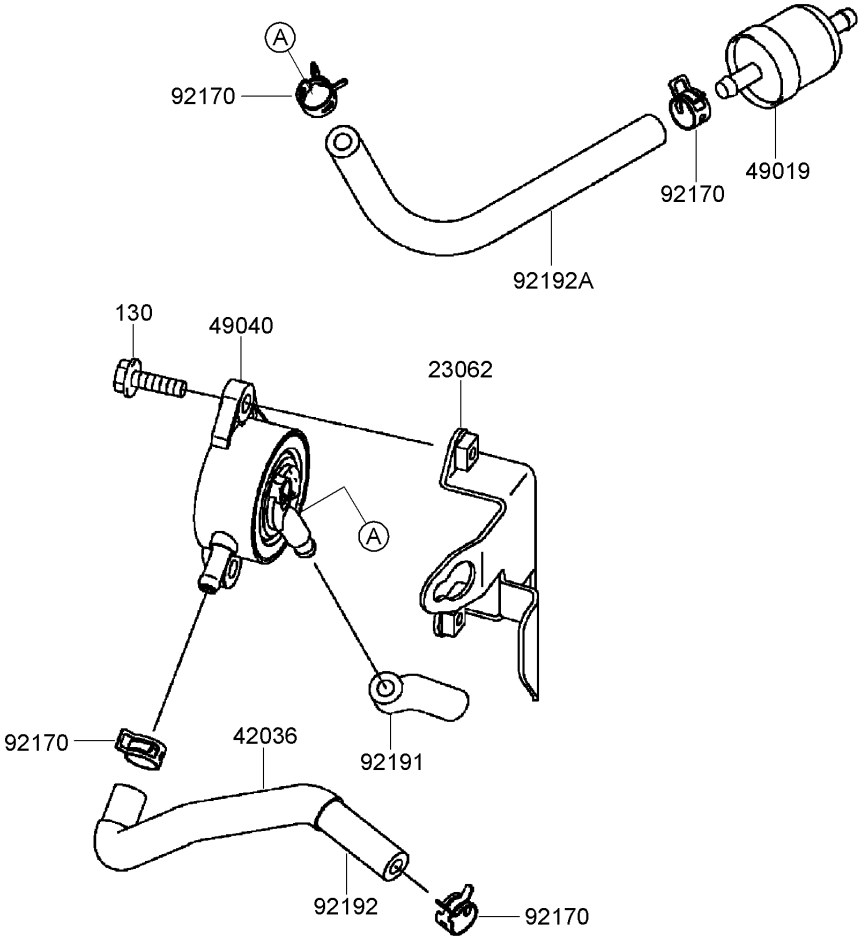

Fuel Tank and Valve Assembly
Kawasaki FH580V-AS40-R

Ref	Part No.	Qty.	Description
❸23062	23062-7004-9H	1	Bracket
❸42036	42036-7012	1	Sleeve
❸49019	49019-7001	1	Filter-Fuel
❸49040	49040-7001	1	Pump-Fuel
❸92170	92170-2088	4	Clamp
❸92191	92191-7002	1	Tube
❸92192	92192-7035	1	Tube (6.35X12.7X170)
❸92192A	92192-7037	1	Tube (6.35X12.7X160)
❸130	130B0620	2	Bolt-Flanged (6X20)

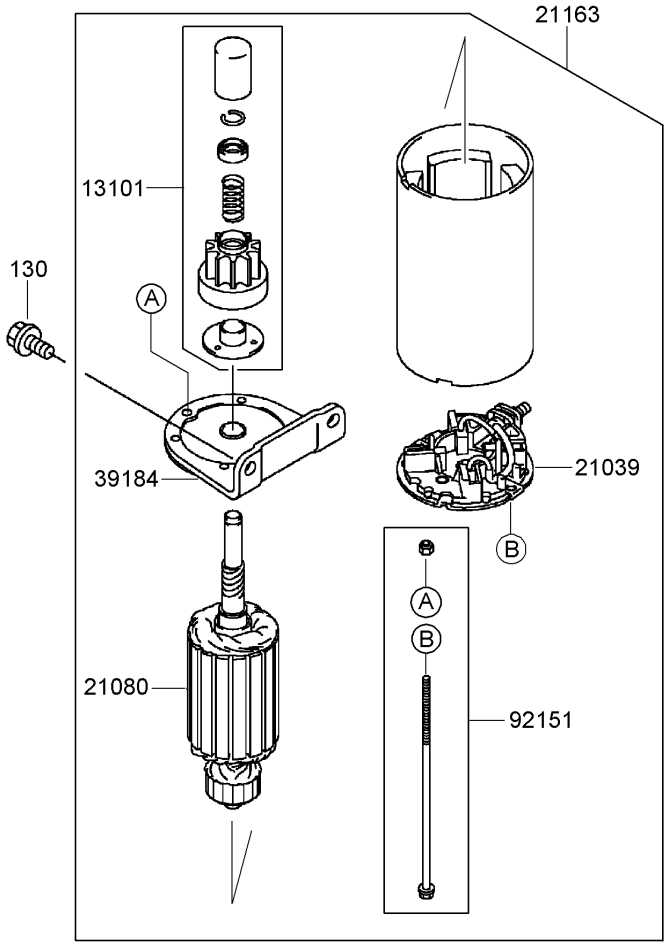

Starter Assembly
Kawasaki FH580V-AS40-R

Ref	Part No.	Qty.	Description
❸13101	13101-7003	1	Gear ASM
❸21039	21039-7004	1	Brush
❸21080	21080-7001	1	Armature
❸21163	21163-7010	1	Starter-Electric
❸39184	39184-7004	1	Bracket ASM
❸92151	92151-7013	1	Bolt
❸130	130B0816	2	Bolt-Flanged (8X16)

56033

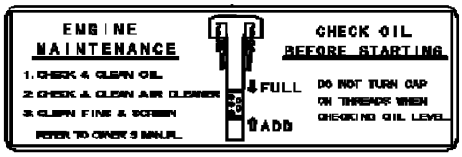

56070

56080

Label Assembly
Kawasaki FH580V-AS40-R

Ref	Part No.	Qty.	Description
❸56033	56033-7003	1	Label-Manual
❸56070	56070-7001	1	Label-Warning
❸56080	56080-7022	1	Label-Brand

Attachments and Accessories

For 74409 - Z340 Z Master, With 40in 7-Gauge Side Discharge Mower

Product Name	Model/Part
Blade-Rotary, 14 Inch (Mid Flow)	108-4110-03
Blade-Rotary, 14 Inch (Low Flow)	108-4111-03
Blade-Rotary, 14 Inch (Atomic)	108-4112-03

Attachments and Accessories

For 74409CP - Z340 Z Master, With 40in 7-Gauge Side Discharge Mower

Product Name	Model/Part
Blade-Rotary, 14 Inch (Mid Flow)	108-4110-03
Blade-Rotary, 14 Inch (Low Flow)	108-4111-03
Blade-Rotary, 14 Inch (Atomic)	108-4112-03
40 Inch Recycler Kit	110-2070

NOTES

NOTES

TORO®