Form No. 3358-273 Rev B

TORO®

Count on it.

Operator's Manual

Titan™ Z4800 and Z5200

Model No. 74812—Serial No. 270000001 and Up

Model No. 74814—Serial No. 270000001 and Up

Warning

CALIFORNIA
Proposition 65 Warning

The engine exhaust from this product contains chemicals known to the State of California to cause cancer, birth defects, or other reproductive harm.

Important: This engine is not equipped with a spark arrester muffler. It is a violation of California Public Resource Code Section 4442 to use or operate the engine on any forest-covered, brush-covered, or grass-covered land. Other states or federal areas may have similar laws.

This spark ignition system complies with Canadian ICES-002, ISO 14982, EN 55012.

The enclosed *Engine Owner's Manual* is supplied for information regarding the US Environmental Protection Agency (EPA) and the California Emission Control Regulation of emission systems, maintenance, and warranty. Replacements may be ordered through the engine manufacturer.

For models with stated engine horsepower, the gross horsepower of the engine was laboratory rated by the engine manufacturer in accordance with SAE J1940. As configured to meet safety, emission, and operating requirements, the actual engine horsepower on this class of lawn mower will be significantly lower.

Introduction

Read this information carefully to learn how to operate and maintain your product properly and to avoid injury and product damage. You are responsible for operating the product properly and safely.
You may contact Toro directly at www.Toro.com for product and accessory information or help finding a dealer.

Whenever you need service, genuine Toro parts, or additional information, contact an Authorized Service Dealer or Toro Customer Service and have the model and serial numbers of your product ready. Figure 1 identifies the location of the model and serial numbers on the product. Write the numbers on the front cover.

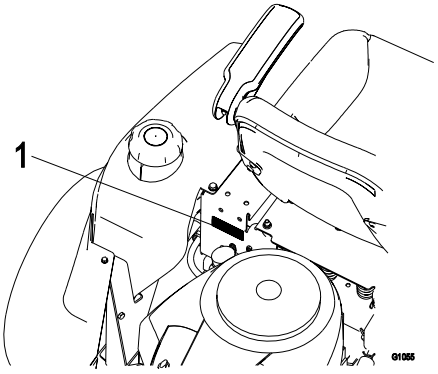

Figure 1

Behind the seat

1. Model and serial number plate

This manual identifies potential hazards and has safety messages identified by the safety alert symbol (Figure 2), which signals a hazard that may cause serious injury or death if you do not follow the recommended precautions.



Figure 2

1. Safety alert symbol.

This manual uses two other words to highlight information. **Important** calls attention to special mechanical information and **Note** emphasizes general information worthy of special attention.

Specifications

Engine Specifications:

See Your Engine Owner's Manual

RPM:

Full Speed: 3650 ± 100 (max) RPM

(No Load)

Idle: 1650 (min) RPM

Fuel System:

Capacity: 4.0 gal. (15.1L)

Type of Fuel: Regular unleaded gasoline, 87 octane or higher.

Fuel Filter: replaceable in-line **BRIGGS & STRATTON** P/N 695666

Fuel Shut-Off Valve: in-line, 1/4 turn

Electrical System:

Charging System: Flywheel Alternator

Charging Capacity: 16 amps

Battery Type: BCI Group U1

Battery Voltage: 12 Volt

Polarity: Negative Ground

Fuses: 1-25 amp, 1-20 amp, 1-15amp blade type

Safety Interlock System:

PTO must be ***disengaged, brake engaged***, and ***motion control levers out*** (neutral lock) ***to start engine***. (It is not necessary for the operator to be in the seat to start the engine.)

Operator must be in seat ***when PTO is engaged***, ***brake is disengaged***, or ***motion control levers are moved in*** or engine will stop.

Engine will stop if either the left, the right, or both levers are ***moved from neutral lock position while brake is engaged***.

Operator Controls

Steering and Motion Control:

Separate levers, on each side of the console, control speed and direction of travel of the respective drive wheels.

Steering is controlled by varying the position of the levers relative to each other.

Moving motion control levers outward (in slots) locks the drive system in neutral.

Motion control levers are adjustable to two heights.

PTO Switch: Engages electric clutch (to drive belt) which engages mower blades.

Parking Brake Lever: Engages parking brake.

Deck Height Adjustment Pin: Sets cutting height to desired position.

Deck Lift: Foot pedal that raises the deck.

Seat:

Type: Standard seat: high back, foam padded with spring suspension.

Mounting: Hinged to tilt up for access to battery and other components. Held in tilted position with lanyard. Adjustable fore and aft.

Armrests: Standard: foam padded flip-up adjustable height armrests.

Seat Safety Switch: Incorporated into the Safety Interlock System.

Hydrostatic Ground Drive System:

Hydrostatic Drive: Two Hydro Gear ZT2800 Integrated drive systems.

Hydraulic Oil: Use Mobil 1 15W-50 Synthetic Motor Oil.

Speeds: All units:

0 – 7 mph (11.3 km/hr) forward.

0 – 5 mph (8.0 km/hr) reverse.

Drive wheel releases, located on left and right sides of engine deck, allow machine to be moved when the engine is not running and brake is off.

Tires and Wheels

Drive Tires:

(48”) 20 x 9-8

(52”) 20 x 10-8

All 4-ply

Front Caster Tires:

Pneumatic, 10 x 4 smooth tread tires.

Cutting Deck

48” Deck: 48” (122 cm)

52” Deck: 52” (132 cm)

Discharge:

Side (Optional Mulch and/or Bag)

Blade Size:

48” Deck: 3 each - 16.25” blades

52” Deck: 3 each - 18” blades

Blade Spindles: solid steel spindles with no maintenance bearings.

Deck Drive: Electric clutch mounted on vertical engine shaft. Blades are driven by one belt (w/self-tensioning idler) direct from the engine.

Deck: Full floating deck.

Maximum turf protection is provided by anti-scalp rollers: 3 rollers (48” & 52”)

Deck design allows for bagging, mulching or side discharge.

Cutting Height Adjustment: a foot deck lift lever is used to adjust the cutting height from 1.5” (3.8 cm) to 4.5” (11.4 cm.) in 1/2” (1.3 cm.) increments.

The cutting height adjustment handle has a transport position and all adjustments can be made while the operator remains seated.

Dimensions

Overall Width:

Without deck:

48” Deck: 45.5” (116 cm)

52” Deck: 47.0” (119 cm)

Deflector up:

48” Deck: 48.3” (122 cm)

52” Deck: 53.0” (135 cm)

Deflector down:

48” Deck: 59.4” (151 cm)

52” Deck: 64.2 (163 cm)

Overall Length:

48” Deck: 73.4” (186 cm)

52” Deck: 73.4” (186 cm)

Overall Height:

48” Deck: 42.2” (107 cm)

52” Deck: 42.2” (107 cm)

Tread Width: (center to center of tires, widthwise)

Drive Wheels:

48” Deck: 42.2” (107 cm)

52” Deck: 42.2” (107 cm)

Front Casters:

48” Deck: 42.2” (107 cm)

52” Deck: 42.2” (107 cm)

Wheel Base: (center of caster tire to center of drive tire)

48” Deck: 42.2” (107 cm)

52” Deck: 42.2” (107 cm)

Curb Weight:

48” Deck: 645 lbs (292.6 kg)

52” Deck: 660 lbs (299.4 kg)

Torque Requirements

Spindle Pulley Nuts: 45-55 ft-lbs (61-75 N-m)

Blade Mounting Bolt: 45-55 ft-lbs. (61-75N-m)

Anti-Scalp Roller Nuts: 27-33 ft-lbs. (37-45 N-m)

Engine Mounting Bolts: 27-33 ft-lbs. (37-45 N-m)

Wheel Lug Nuts: 70-90 ft-lbs. (95-122 N-m)

Clutch Mounting Bolt (secured with threadlocker): 50-55 ft-lbs. (68-75 N-m)

Contents

Introduction 2
Specifications 3
Safety 5
- Safe Operating Practices 5
- Toro Riding Mower Safety.....9
- Slope Chart 10
- Safety and Instructional Decals.....11

Product Overview 15
- Controls 16

Operation 17
- Think Safety First 17
- Recommended Gasoline.....17
- Checking the Engine Oil Level 19
- Starting the Engine.....19
- Operating the Blades 20
- Stopping the Engine.....20
- The Safety Interlock System 20
- Driving Forward or Backward.....21
- Stopping the Machine 22
- Tracking Adjustment 22
- Adjusting the Height of Cut 23
- Positioning the Seat 23
- Adjusting the Motion Control Levers 23
- Pushing the Machine by Hand 24
- Side Discharge.....25
- Operating Tips.....25

Maintenance
- Recommended Maintenance Schedule(s).....27

Premaintenance Procedures 28
- Raising the Seat.....28
- Accessing the Battery 28

Lubrication 28
- Greasing the Bearings 28

Engine Maintenance 29
- Servicing the Air Cleaner 29
- Servicing the Engine Oil 29
- Checking the Hydraulic Oil Level 31
- Change the Hydraulic System Filter 32
- Servicing the Spark Plug 32
- Cleaning the Blower Housing 33

Fuel System Maintenance 34
- Replacing the Fuel Filter.....34

Electrical System Maintenance 35
- Charging the Battery.....35
- Servicing the Fuses and Relays 36

Drive System Maintenance 37
- Checking the Tire Pressure 37

Mower Maintenance 37
- Servicing the Cutting Blades.....37
- Leveling the Mower Deck 39
- Adjusting the Blade Slope.....40
- Removing the Mower Deck.....41
- Mower Belt Maintenance 42
- Installing the Mower Deck.....42
- Replacing the Discharge Deflector 43

Cleaning 43
- Washing the Underside of the Mower...43

Storage 44
- Cleaning and Storage 44

Troubleshooting.....46
Schematics 49

Safety

This machine meets or exceeds the safety specifications of the American National Standards Institute B71.1-2003 in effect at the time of production. However, improper use or maintenance by the operator or owner can result in injury. To reduce the potential for injury, comply with these safety instructions and always pay attention to the safety alert symbol, which means CAUTION, WARNING, or DANGER-"personal safety instruction." Failure to comply with the instruction may result in personal injury or death.

Safe Operating Practices

The following instructions are from ANSI standard B71.1-2003.
This product is capable of amputating hands and feet and throwing objects. Always follow all safety instructions to avoid serious injury or death.

General Operation

- Read, understand, and follow all instructions in the operator's manual and on the machine before starting.
- Do not place hands or feet near rotating parts or under the machine. Keep clear of the discharge opening at all times.
- Allow only responsible adults who are familiar with the instructions to operate the machine.
- Clear the area of objects such as rocks, toys, wire, etc., which could be picked up and thrown by the blade.
- Be sure the area is clear of other people before mowing. Stop the machine if anyone enters the area.
- Never carry passengers.
- Do not mow in reverse unless absolutely necessary. Always look down and behind before and while backing up.
- Be aware of the mower discharge direction and do not point it at anyone. Avoid discharging material against a wall or obstruction. Material may ricochet back toward the operator. Stop the blades when crossing gravel surfaces.
- Do not operate the mower without either the entire grass collection system or the discharge deflector in place.
- Be alert, slow down and use caution when making turns. Look behind and to the side before changing directions.
- Never leave a running machine unattended. Always turn off blades, engage parking brake, stop engine, and remove key before dismounting.
- Turn off blades when not mowing. Stop the engine, wait for all parts to come to a complete stop, engage parking brake, and remove key before cleaning the machine, removing the grass or unclogging the deflector.
- Operate the machine only in daylight or good artificial light.
- Do not operate the machine while under the influence of alcohol or drugs.
- Watch for traffic when operating near or crossing roadways.
- Use extra care when loading or unloading the machine into a trailer or truck.
- Always wear eye protection when operating the mower.
- Data indicates that operators, age 60 years and above, are involved in a large percentage of riding mower-related injuries. These operators should evaluate their ability to operate the riding mower safely enough to protect themselves and others from serious injury.
- Always follow the recommendations for wheel weights or counterweights.

Slope Operation

Slopes are a major factor related to loss of control and tip-over accidents, which can result in severe injury or death. Operation on all slopes requires extra caution. If you cannot back up the slope or if you feel uneasy on it, do not mow it.

- Do not mow slopes greater than 15 degrees.
- Watch for ditches, holes, rocks, dips, and rises that change the operating angle, as rough terrain could overturn the machine.
- Choose a low ground speed so you will not have to stop while operating on a slope.
- Do not mow slopes when grass is wet. Slippery conditions reduce traction and could cause sliding and loss of control.
- Reduce speed and use extreme caution on slopes.
- Do not make sudden turns or rapid speed changes.
- Remove or mark obstacles such as rocks, tree limbs, etc. from the mowing area. Tall grass can hide obstacles.
- Avoid sudden starts when mowing uphill because the mower may tip backwards.
- Be aware that loss of traction may occur going downhill. Weight transfer to the front wheels may cause drive wheels to slip and cause loss of braking and steering.
- Always avoid sudden starting or stopping on a slope. If tires lose traction, disengage the blades and proceed slowly off the slope.
- Use extreme care with grass collection systems or other attachments. These can change the stability of the machine and cause loss of control.
- Do not try to stabilize the machine by putting your foot on the ground.
- Do not mow near drop-offs, ditches, steep banks or water. Wheels dropping over edges can cause rollovers, which may result in serious injury, death or drowning.
- Use a walk behind mower and/or a hand trimmer near drop-offs, ditches, steep banks or water.

Children

Tragic accidents can occur if the operator is not alert to the presence of children. Children are often attracted to the machine and the mowing activity. Never assume that children will remain where you last saw them.

- Keep children out of the mowing area and under the watchful care of another responsible adult, not the operator.
- Be alert and turn the machine off if children enter the area.
- Before and while backing or changing direction, look behind, down, and side-to-side for small children.
- Never carry children, even with the blades off. They may fall off and be seriously injured or interfere with safe machine operation.
- Children who have been given rides in the past may suddenly appear in the mowing area for another ride and be run over or backed over by the mower.
- Never allow children to operate the machine.
- Use extra care when approaching blind corners, shrubs, trees, the end of a fence or other objects that may obscure vision.

Towing

- This machine does not make any provisions for towing.

Service

Safe Handling of Gasoline:

To avoid personal injury or property damage, use extra care when handling gasoline and other fuels. They are flammable and the vapors are explosive.

- Extinguish all cigarettes, cigars, pipes and other sources of ignition.
- Use only an approved container.
- Never remove the gas cap or add fuel when the engine is running. Allow the engine to cool before refueling.
- Never refuel the machine indoors.
- Never store the machine or fuel container inside where there is an open flame, such as near a water heater or furnace.
- Never fill containers inside a vehicle or on a truck or trailer with a plastic liner. Always place containers on the ground away from your vehicle before filling.
- Remove gas-powered equipment from the truck or trailer and refuel it on the ground. If this is not possible, then refuel such equipment with a portable container, rather than from a gasoline dispenser nozzle.
- Keep the nozzle in contact with the rim of the fuel tank or container opening at all times until the fueling is complete. Do not use a nozzle lock-open device.
- If fuel is spilled on clothing, change clothing immediately.
- Never overfill the fuel tank. Replace gas cap and tighten securely.

General Service:

- Never run a machine inside a closed area.
- Keep nuts and bolts tight, especially the blade attachment bolts. Keep equipment in good condition.
- Never tamper with safety devices. Check their proper operation regularly.
- Keep the machine free of grass, leaves, or other debris build-up. Clean up oil or fuel spillage and fuel soaked debris. Allow the machine to cool before storing.
- Stop and inspect the equipment if you strike an object. Repair, if necessary, before restarting.
- Never make any adjustments or repairs with the engine running.
- Grass collection system components are subject to wear, damage and deterioration, which could expose moving parts or allow objects to be thrown. Frequently check components and replace with manufacturers' recommended parts, when necessary.
- Mower blades are sharp and can cut. Wrap the blades or wear gloves, and use extra caution when servicing them.
- Check for proper brake operation frequently. Adjust and service as required.
- Maintain or replace safety and instruction decals as necessary.
- Use only genuine Toro replacement parts to ensure that original standards are maintained.

Toro Riding Mower Safety

The following list contains safety information specific to Toro products or other safety information that you must know that is not included in the ANSI standards.

- Engine exhaust contains carbon monoxide, which is an odorless, deadly poison that can kill you. Do not run engine indoors or in an enclosed area.
- Stop the engine, wait for all moving parts to stop, engage parking brake, disconnect spark plug wire(s) and remove key before performing any service, repairs, maintenance or adjustments.
- Keep hands, feet, hair, and loose clothing away from attachment discharge area, underside of mower and any moving parts while engine is running.
- Do not touch equipment or attachment parts which may be hot from operation. Allow to cool before attempting to maintain, adjust or service.
- Battery acid is poisonous and can cause burns. Avoid contact with skin, eyes, and clothing. Protect your face, eyes, and clothing when working with a battery.
- Battery gases can explode. Keep cigarettes, sparks and flames away from battery.
- Use only Toro approved attachments. Warranty may be voided if used with unapproved attachments.
- If loading the machine onto a trailer or truck, use a single, full-width ramp only. The ramp angle should not exceed 15 degrees.

Note: The left and right sides of the machine are determined while sitting in the seat in the normal operating position.

Slope Chart

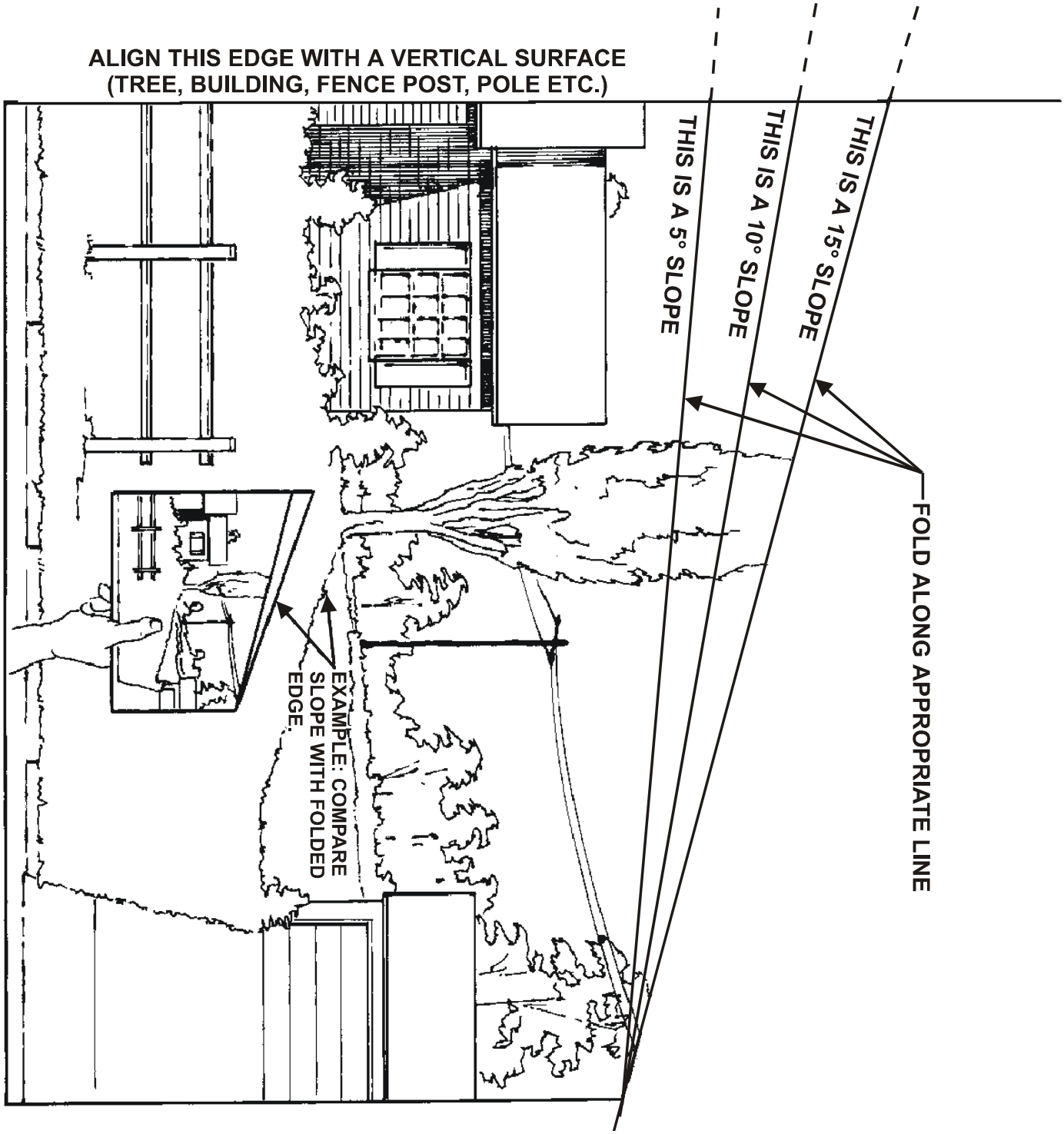
ALIGN THIS EDGE WITH A VERTICAL SURFACE
(TREE, BUILDING, FENCE POST, POLE ETC.)
THIS IS A 5° SLOPE
THIS IS A 10° SLOPE
THIS IS A 15° SLOPE
FOLD ALONG APPROPRIATE LINE
EXAMPLE: COMPARE SLOPE WITH FOLDED EDGE.

Safety and Instructional Decals

Safety decals and instructions are easily visible to the operator and are located near any area of potential danger. Replace any decal that is damaged or lost.



1. Warning – do not touch the hot surface.

PART NO. 106-5517
LOCATION: On LH & RH Rear Frame

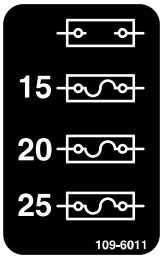

1. Unused fuse receptacle
2. Fuse

PART NO. 109-6011
LOCATION: Inside Seat Box by Fuse Box



1. Read the Operator's manual
2. Cutting/dismemberment hazard, fan and entanglement hazard, belt– stay away from moving parts.

PART NO. 109-6210
LOCATION: Under Seat Shield

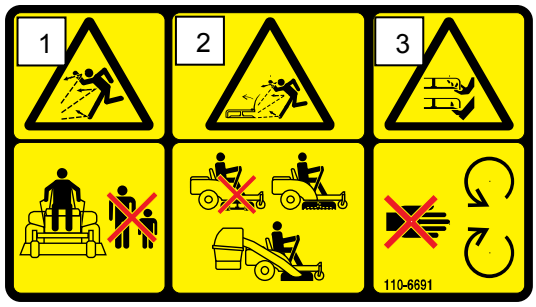

1. Thrown objects hazard – keep bystanders a safe distance from the machine.
2. Thrown objects hazard, mower – keep the discharge deflector or collection system in place.
3. Cutting/dismemberment of hand or foot – stay away from moving parts.

PART NO. 110-6691
LOCATION: On Top Side of Deck, on Front Corners of Deck

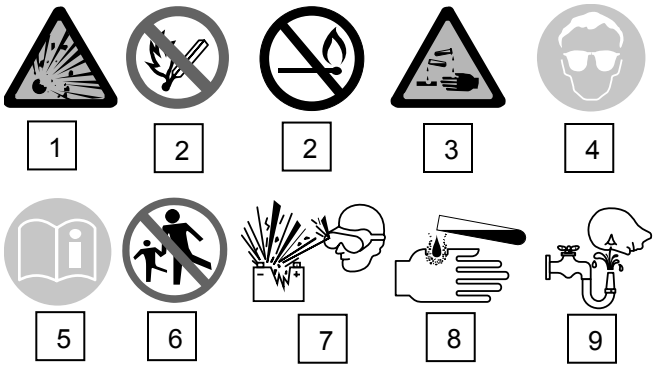

1. Explosion hazard
2. No fire, open flame, or smoking.
3. Caustic liquid/chemical burn hazard.
4. Wear eye protection.
5. Read the Operator's Manual.
6. Keep bystanders a safe distance from the battery.
7. Wear eye protection; explosive gases can cause blindness and other injuries.
8. Battery acid can cause blindness or severe burns.
9. Flush eyes immediately with water and get medical help fast.
10. Contains lead; do not discard.

Battery Symbols
Some or all of these symbols are on the battery.

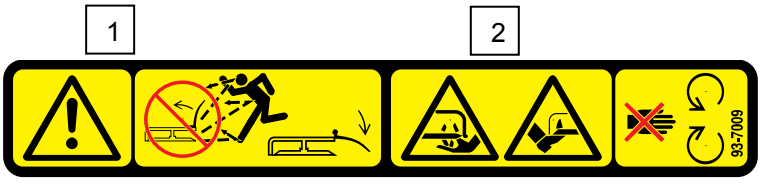

1. Warning – do not operate the mower with the discharge deflector up or removed; keep the discharge deflector in place.
2. Cutting/dismemberment hazard of hand or foot, mower blade – stay away from moving parts.

PART NO. 93-7009
LOCATION: Behind Discharge Deflector on Deck Side Plate

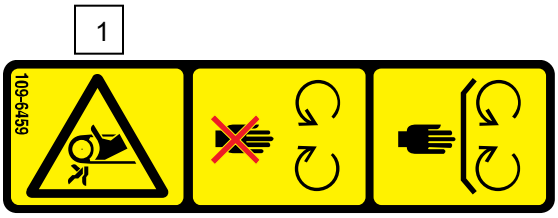

1. Entanglement hazard, belt – do not open or remove safety shields while engine is running, keep shields in place.

PART NO. 109-6459
LOCATION: Under Belt Shields

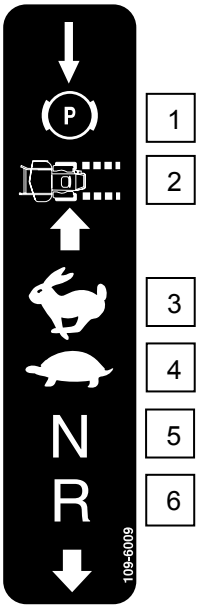

1. Parking Brake
2. Machine Speed
3. Fast
4. Slow
5. Neutral
6. Reverse

PART NO. 109-6009
LOCATION: Near LH Motion Control Lever

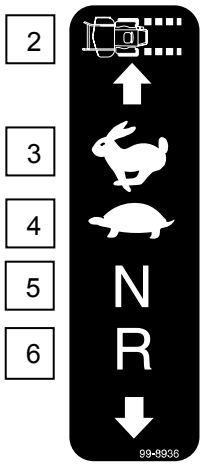

PART NO. 99-8936
LOCATION: Near RH Motion Control Lever

1. Height of cut

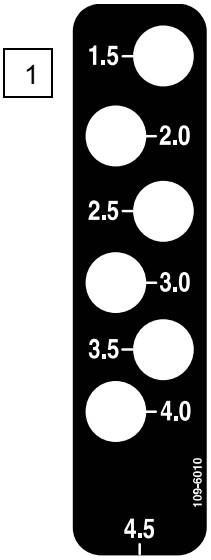

PART NO. 109-6010
LOCATION: On Cut Height Frame

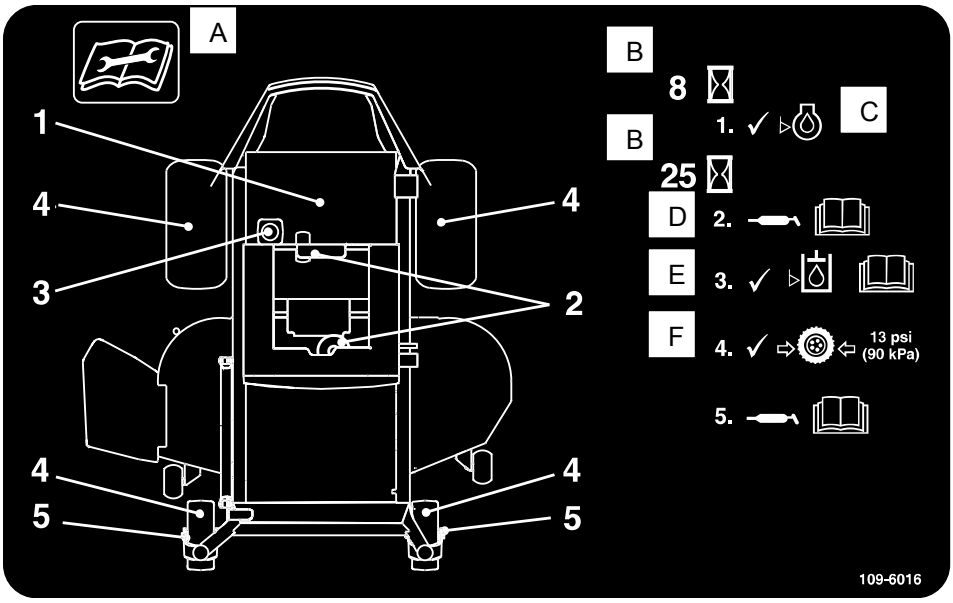

A. Read the instructions before servicing or performing maintenance.
B. Time interval.
C. Check oil level.
D. Refer to Operator's Manual for grease instructions.
E. Check hydraulic oil level and refer to Operator's manual for further instructions.
F. Check tire pressure.

PART NO. 109-6016
LOCATION: Near LH Motion Control Lever

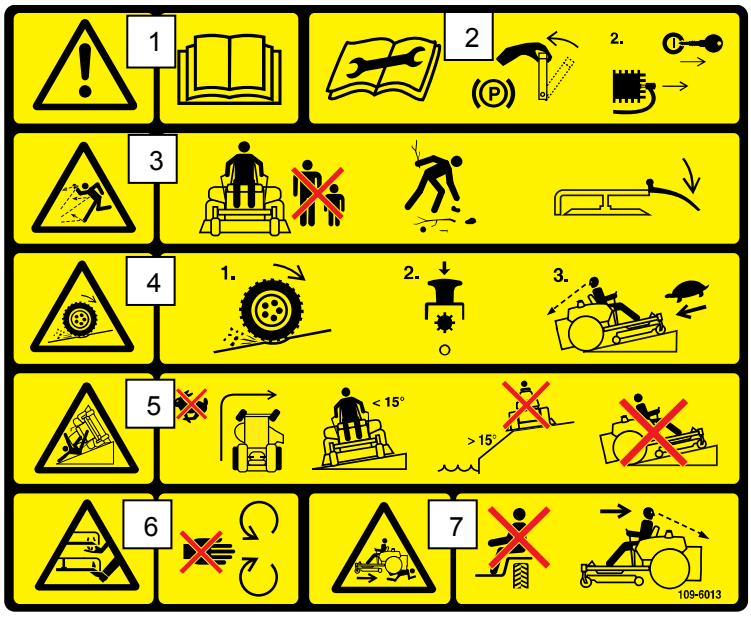

PART NO. 109-6013
LOCATION: Middle of Footrest

1. Warning—read the Operator's Manual.
2. Read the instructions before servicing or performing maintenance; apply parking brake, remove the ignition key and disconnect the spark plug wire.
3. Thrown object hazard – keep bystanders a safe distance from the machine, pick up debris before operating, keep the discharge deflector in place.
4. Loss of traction/control hazard, slopes – loss of traction/control on slope, disengage the blade control switch (PTO), proceed off the slope slowly.
5. Tipping hazard – avoid sudden and sharp turns while on slopes, only mow across slopes less than 15 degrees, keep a safe distance from water, and do not mow up and down slopes.
6. Cutting/dismemberment hazard of hand or foot, mower blade – stay away from moving parts.
7. Crushing/dismemberment hazard of bystanders, reversing;– do not carry passengers, look behind and down when reversing.

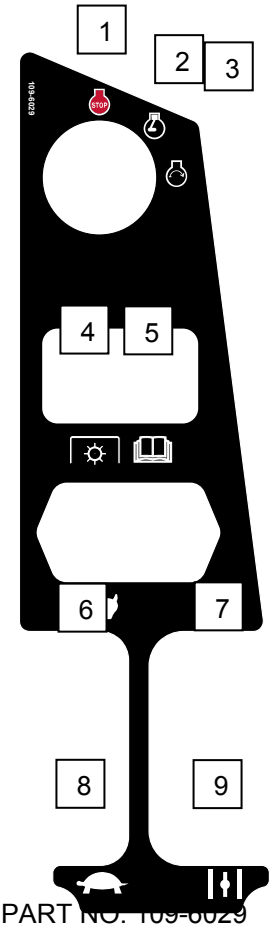

1. Engine – stop
2. Engine – run
3. Engine – start
4. Power take-off (PTO), Blade control switch.
5. Read Operator's Manual
6. Throttle - fast
7. Choke – on
8. Throttle – slow
9. Choke – off

PART NO. 109-6029
LOCATION: On Control Panel

TRACTION DRIVE
BELT ROUTING

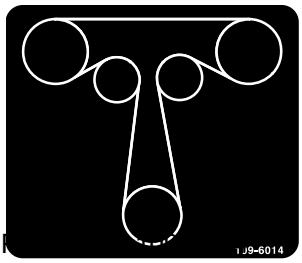

LOCATION: RH Side of Seat Box

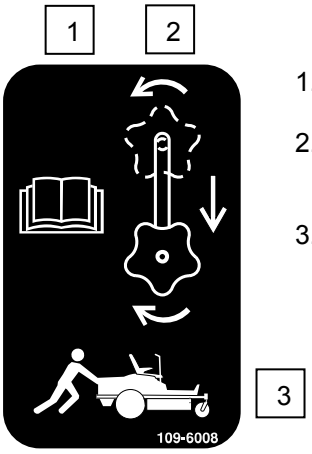

1. Read the Operator's Manual.
2. Rotate the drive release knob to loosen, slide the knob, and tighten.
3. Push the machine.

PART NO. 109-6008
LOCATION: Next to Drive Release

DECK DRIVE
BELT ROUTING

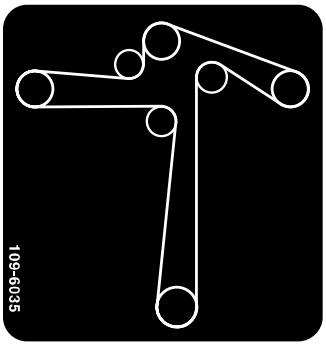

PART NO. 109-6035
LOCATION: Left Rear Edge of Deck

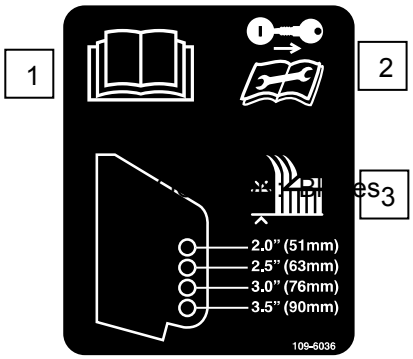

1. Read Operator's Manual.
2. Remove the ignition key and read the instructions before servicing or performing maintenance.
3. Height of cut.

PART NO. 109-6036
LOCATION: Top of Deck Near Washout Port

Product Overview

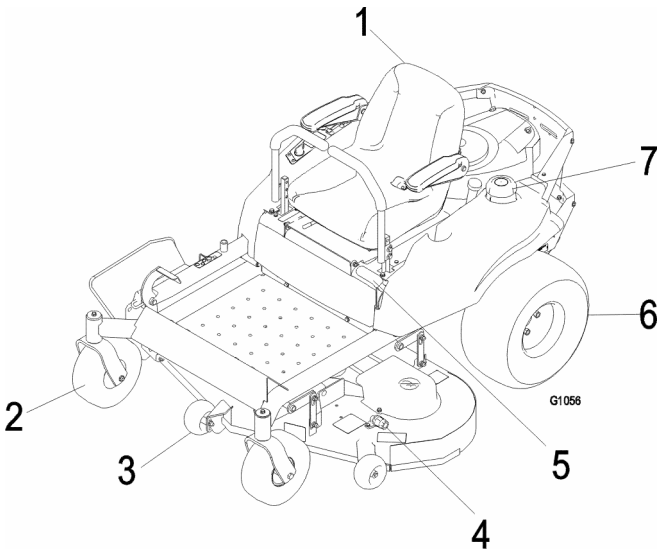

Figure 3

1. Operator seat
2. Front caster wheel
3. Anti-scalp roller
4. Washout fitting
5. Park brake
6. Rear drive wheel
7. Gas tank cap

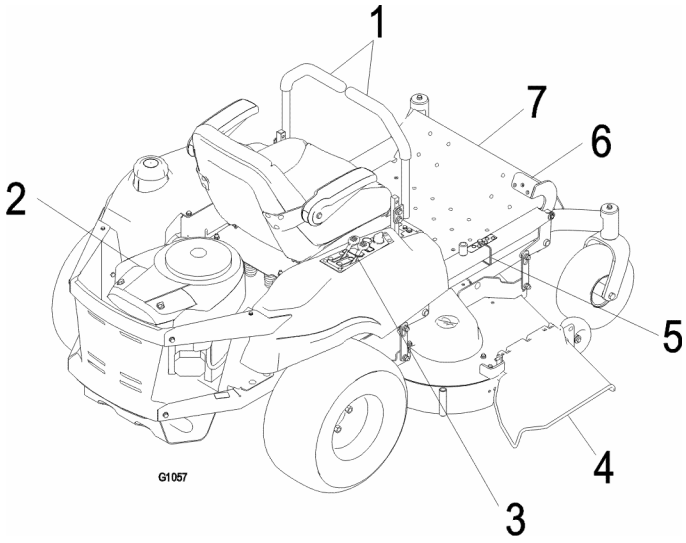

Figure 4

1. Motion control levers
2. Engine
3. Control panel
4. Discharge deflector
5. Height of cut adjustment
6. Height of cut foot lever
7. Footrest

Controls

Become familiar with all of the controls in Figure 3, Figure 4, and Figure 5 before you start the engine and operate the machine.

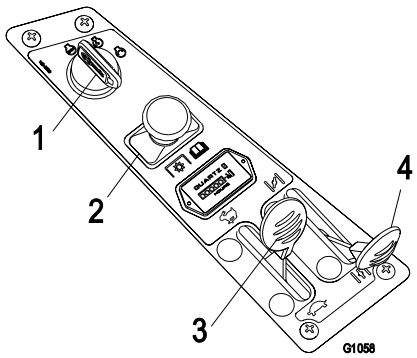

Figure 5

Control Panel

1. Ignition switch
2. Blade control switch (power take-off)
3. Throttle
4. Choke

Ignition Switch

The ignition switch has three positions, Off, Run and Start. The key will turn to Start and move back to Run upon release. Turning the key to the Off position will stop the engine; however, always remove the key when leaving the machine to prevent someone from accidentally starting the engine (Figure 5).

Blade Control Switch (Power Take-Off)

The blade control switch, represented by a power take-off (PTO) symbol, engages and disengages power to the mower blades (Figure 5).

Choke Control

The choke is used to aid in starting a cold engine. ***DO NOT*** run a warm engine with the choke in the **"ON"** position. Moving the choke lever forward will put the choke in the **"ON"** position and moving the choke lever to the rear will put the choke in the **"OFF"** position (Figure 5).

Throttle Control

The throttle is used to control engine speed. Moving throttle lever ***forward*** will increase engine speed and moving throttle lever ***to the rear*** will decrease engine speed. Moving the throttle forward into the detent is full throttle (Figure 5).

Motion Control Levers and Parking Brake

The motion control levers are speed sensitive controls of independent wheel motors. Moving a lever forward or backward turns the wheel on the same side forward or in reverse; wheel speed is proportional to the amount the lever is moved. Moving the control levers outward from the center position locks them in the neutral position. Engaging the parking brake lever allows the operator to exit the machine (Figure 13). Always position the motion control levers into the neutral position and engage the park brake lever when you stop the machine or leave it unattended.

Height-of-Cut Foot Lever

The height of cut lever allows the operator to lower and raise the deck from the seated position. When the lever is moved forward, away from the operator the deck is raised from the ground and when moved back, towards the operator it is lowered toward the ground. Only adjust the height of cut while machine is not moving (Figure 14).

Operation

Note: The left and right sides of the machine are determined while sitting in the seat in the normal operating position.

Think Safety First

Please carefully read all of the safety instructions and decals in the safety section. Knowing this information could help you, your family, pets or bystanders avoid injury.

Mowing on wet grass or steep slopes can cause sliding and loss of control.

Wheels dropping over edges can cause rollovers, which may result in serious injury, death or drowning.

To avoid loss of control and possibility of rollover:

- **Do not mow near drop-offs or near water.**
- **Do not mow slopes greater than 15 degrees.**
- **Reduce speed and use extreme caution on slopes.**
- **Avoid sudden turns or rapid speed changes.**

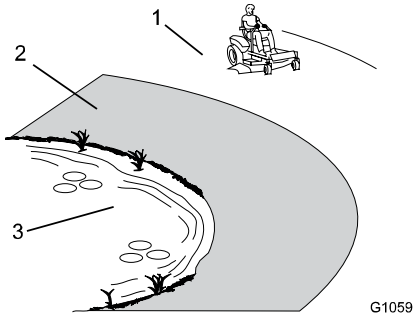

Figure 6

1. Safe Zone-use the Titan here.
2. Use walk behind mower and/or hand trimmer near drop-offs and water.
3. Water

Refer to the Slope Chart on page 10 to determine the approximate slope angle to be mowed.

Recommended Gasoline

Use UNLEADED Regular Gasoline suitable for automotive use (87 pump octane minimum).

Important: Never use methanol, gasoline containing methanol, or gasohol containing more than 10% ethanol because the fuel system could be damaged. Do not mix oil with gasoline.

In certain conditions, gasoline is extremely flammable and highly explosive.

A fire or explosion from gasoline can burn you and others and can damage property.

- **Fill the fuel tank outdoors, in an open area, when the engine is cold. Wipe up any gasoline that spills.**
- **Never fill the fuel tank inside an enclosed trailer.**
- **Do not fill the fuel tank completely full. Add gasoline to the fuel tank until the body of the tank is full but fuel does not fill the neck of the tank. This empty space in the tank allows gasoline to expand.**
- **Never smoke when handling gasoline, and stay away from an open flame or where gasoline fumes may be ignited by a spark.**
- **Store gasoline in an approved container and keep it out of the reach of children. Never buy more than a 30-day supply of gasoline.**
- **Do not operate without entire exhaust system in place and in proper working condition.**

In certain conditions during fueling, static electricity can be released causing a spark which can ignite the gasoline vapors.

A fire or explosion from gasoline can burn you and others and can damage property.

- **Always place gasoline containers on the ground away from your vehicle before filling.**
- **Do not fill gasoline containers inside a vehicle or on a truck or trailer bed because interior carpets or plastic truck bed liners may insulate the container and slow the loss of any static charge.**
- **When practical, remove gas-powered equipment from the truck or trailer and refuel the equipment with its wheels on the ground.**
- **If this is not possible, then refuel such equipment on a truck or trailer from a portable container, rather than from a gasoline dispenser nozzle.**
- **If a gasoline dispenser nozzle must be used, keep the nozzle in contact with the rim of the fuel tank or container opening at all times until fueling is complete.**

Gasoline is harmful or fatal if swallowed.

Long-term exposure to vapors can cause serious injury and illness.

- **Avoid prolonged breathing of vapors.**
- **Keep face away from nozzle and gas tank or conditioner opening.**
- **Keep gas away from eyes and skin.**

Using Stabilizer/Conditioner

Use a fuel stabilizer/conditioner in the machine to provide the following benefits:

- Keeps gasoline fresh during storage of 30 days or less. For longer storage it is recommended that the fuel tank be drained.
- Cleans the engine while it runs
- Eliminates gum-like varnish buildup in the fuel system, which causes hard starting

  Add the correct amount of gas stabilizer/conditioner to the gas.

Note: A fuel stabilizer/conditioner is most effective when mixed with fresh gasoline. To minimize the chance of varnish deposits in the fuel system, use fuel stabilizer at all times.

Gasoline/Alcohol blends

Gasohol (up to 10 percent ethyl alcohol, 90 percent unleaded gasoline by volume) is approved for fuel use by the engine manufacturer. Other gasoline/alcohol blends are not approved.

Filling the Fuel Tank

1. Shut the engine off and set the motion controls to the neutral position and engage parking brake.
2. Clean around the fuel tank cap and remove the cap.
3. Add unleaded regular gasoline until the body of the tank is full but fuel does not fill the neck of the tank (Figure 7). This

space in the neck of the tank allows gasoline to expand. Do not fill the fuel tank completely full.

4. Install the fuel tank cap securely. Wipe up any gasoline that may have spilled.

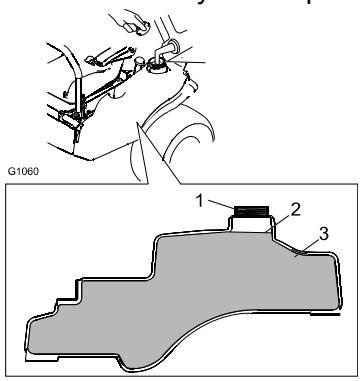

Figure 7

1. Gas tank opening
2. Fill to here, approximately
3. Gas tank body

Checking the Engine Oil Level

Before you start the engine and use the machine, check the oil level in the engine crankcase; refer to Checking the Oil Level in Engine Maintenance.

Starting the Engine

1. Sit down on the seat and move the motion controls outward to the neutral position and engage the parking brake.
2. Disengage the blades by moving the blade control switch to Off (Figure 8).

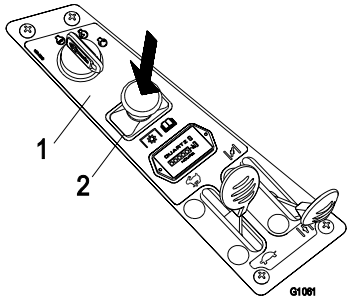

Figure 8

1. Control panel
2. Blade control switch—Off position

3. Move the throttle lever to midway and the choke lever forward before starting a cold engine (Figure 9).

Note: A warm or hot engine may not require choking.

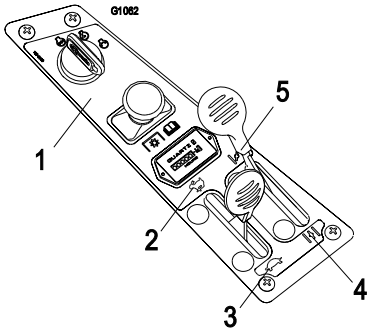

Figure 9

1. Control panel
2. Throttle – fast
3. Throttle – slow
4. Choke – off
5. Choke – on

4. Turn the ignition key to Start to energize the starter. When the engine starts, release the key (Figure 10).

Important: Do not engage the starter for more than 5 seconds at a time. If the engine fails to start, allow a 60 second cool-down period between attempts. Failure to follow these instructions can burn out the starter motor.

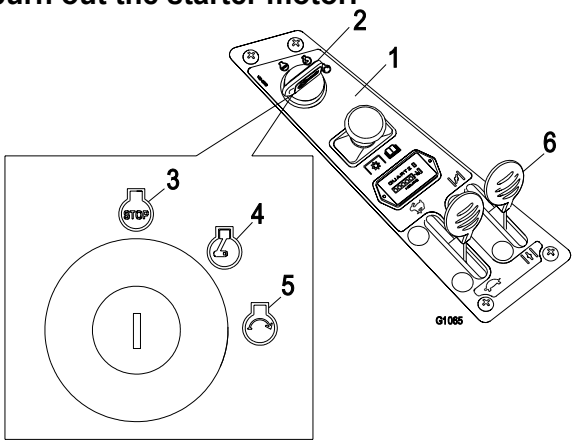

Figure 10

1. Control panel
2. Ignition key—start position
3. Off
4. Run
5. Start
6. Choke

5. If the engine stalls or hesitates, move the choke lever partially forward for a few seconds. (Figure 10).

Operating the Blades

The blade control switch, represented by a power take-off (PTO) symbol, engages and disengages power to the mower blades. This switch controls power to any attachments that draw power from the engine, including the mower deck and cutting blades.

Engaging the Blades

1. Release pressure on the motion control levers and place the machine in neutral.
2. Pull out on the blade control switch to On to engage the blades (Figure 11).
3. Move throttle to full forward position before mowing.

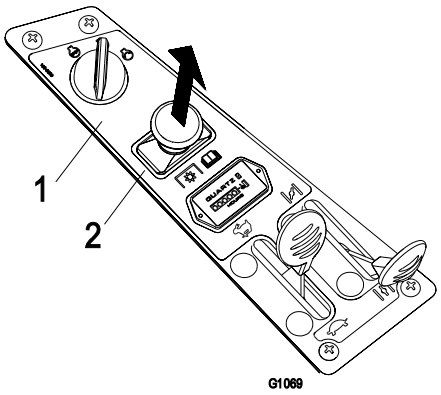

Figure 11

1. Control panel
2. Blade control switch—On position

Disengaging the Blades

Push the blade control switch to Off to disengage the blades (Figure 12).

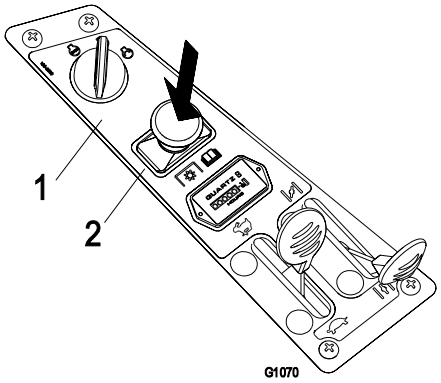

Figure 12

1. Control panel
2. Blade control switch—Off

Stopping the Engine

1. Disengage the blades by moving the blade control switch to Off (Figure 12).
2. Turn the ignition key to Off (Figure 10).
3. Pull the wire off of the spark plug(s) to prevent the possibility of someone accidentally starting the machine before transporting or storing the machine.

The Safety Interlock System

If safety interlock switches are disconnected or damaged the machine could operate unexpectedly causing personal injury.

- **Do not tamper with the interlock switches.**
- **Check the operation of the interlock switches daily and replace any damaged switches before operating the machine.**

Understanding the Safety Interlock System

The safety interlock system is designed to prevent the engine from starting unless:

- The blades are disengaged.
- The motion control levers are in the neutral position.
- The parking brake is engaged.

The safety interlock system is designed to initiate engine shutdown when:

- The parking brake is disengaged and the operator gets off machine.
- The PTO is engaged and the operator gets off machine.
- The parking brake is disengaged and levers are in and the operator gets off machine.
- The parking brake is engaged and motion control levers are in.

Testing the Safety Interlock System

Test the safety interlock system before you use the machine each time.

1. Check starting circuit. Starter ***should*** crank with parking brake ***engaged***, PTO ***disengaged*** and motion control levers moved out in the ***neutral lock*** position. The operator does not need to be in the seat to start the engine.
2. Try to start with ***operator in seat***, parking brake ***disengaged,*** PTO ***disengaged*** and motion control levers in the ***neutral lock*** position - starter ***must not crank***.
3. Try to start with ***operator in seat***, parking brake ***engaged,*** PTO ***engaged*** and motion control levers in the ***neutral lock*** position - starter ***must not crank***.
4. Try to start with ***operator in seat***, parking brake ***engaged,*** PTO ***disengaged, and the left motion control lever in,*** starter ***must not crank,*** repeat again with the ***right lever in***, then with ***both levers in*** - starter ***must not crank.***
5. Check kill circuits. Run engine at one-third throttle, ***disengage*** parking brake and ***raise off*** of seat (but do not get off of machine) engine ***must initiate shutdown.***
6. Run engine at one-third throttle, ***engage PTO*** and ***raise off*** of seat (but do not get off of machine) engine ***must initiate shutdown.***
7. Run engine at one-third throttle, with brake disengaged, move levers in and raise off seat (but do not get off of machine) engine ***must initiate shutdown.***
8. Again, run engine at one-third throttle, brake ***engaged,*** and move ***left motion control lever in*** - engine ***must initiate shutdown.***
9. Repeat again moving the ***right lever in***, then moving ***both levers in*** - engine ***must initiate shutdown*** whether operator is ***on seat or not***.

   NOTE: If machine *does not* pass any of these tests, do not operate. Contact your authorized TORO SERVICE DEALER.

   IMPORTANT: It is essential that operator safety mechanisms be connected and in proper operating condition prior to use for mowing.

Driving Forward or Backward

The throttle control regulates the engine speed as measured in rpm (revolutions per minute). Place the throttle control in the Fast position for best performance. Always operate in the Fast (full throttle) position.

The machine can spin very rapidly. The operator may lose control of the machine and cause personal injury or damage to the machine.

- **Use caution when making turns.**
- **Slow the machine down before making sharp turns.**

Forward

1. Move the levers to the center, unlocked position.
2. To go forward, slowly push the motion control levers forward (Figure 13).

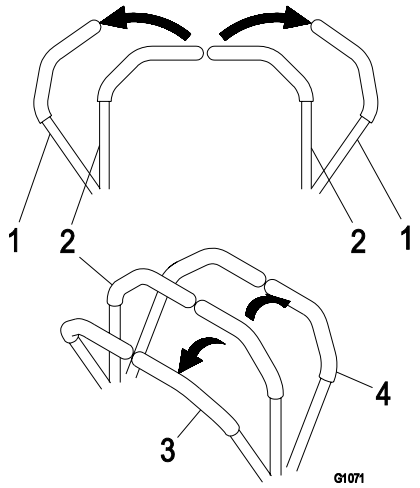

Figure 13

1. Neutral position
2. Center unlock position
3. Forward
4. Backward

To go straight, apply equal pressure to both motion control levers (Figure 13).

To turn, pull back on the motion control lever toward the direction you want to turn (Figure 13).

The farther you move the motion control levers in either direction, the faster the machine will move in that direction.

To stop, pull the motion control levers to neutral.

Backward

1. Move the levers to the center, unlocked position.
2. To go backward, slowly pull the motion control levers rearward (Figure 13).

   To go straight, apply equal pressure to both motion control levers (Figure 13).

   To turn, release the pressure on the motion control lever toward the direction you want to turn (Figure 13).

   To stop, push the motion control levers to neutral.

Stopping the Machine

To stop the machine, move the motion control levers to neutral and outward to the neutral position, disengage the blade control switch, and turn the ignition key to off. Remember to remove the key from the ignition switch.

Tracking Adjustment

If the machine turns right or left when handles are pushed forward together, adjust the stop on the side opposite the direction of turn (see Figure 14). Loosen the screws that hold the motion control limiter stop. Move the stop back until the unit drives straight. Tighten the screws to lock the stop in place. Readjust handles if necessary.

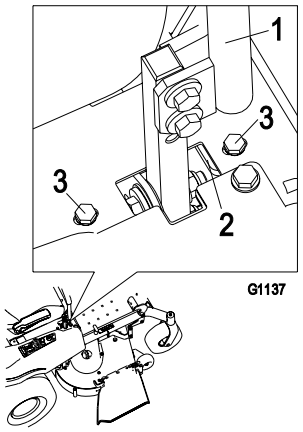

Figure 14

1. Control Arm Shaft
2. Adjust Stop
3. Limiter Stop Screws

Children or bystanders may be injured if they move or attempt to operate the mower while it is unattended.

- **Always remove the ignition key and move the motion control levers outward to the neutral position and apply the parking brake when leaving the machine unattended, even if just for a few minutes.**

Adjusting the Height of Cut

1. Raise the deck to the transport position (4.5” cut height) by pushing the foot actuated lever forward (Figure 15). The spring loaded transport pin will automatically engage and will click into place.
2. Move the deck height adjuster pin to the desired cut height.
3. Push the foot lever forward, pull the transport release handle up and let the deck lower down to the predetermined cut height by slowly decreasing foot pressure allowing the foot lever to travel rearward.

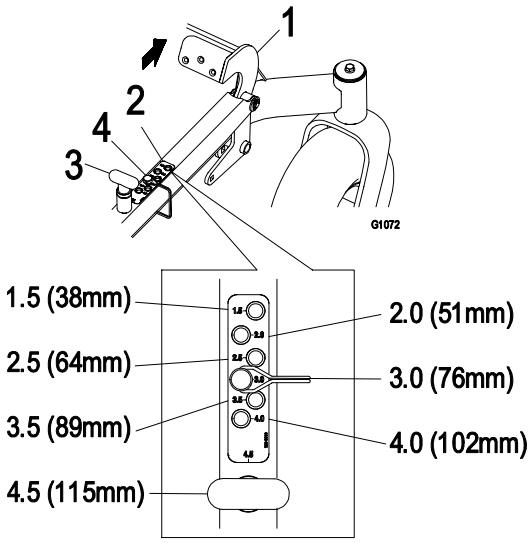

Figure 15

1. Foot actuated height-of-cut lever
2. Height-of-cut positions
3. Transport release handle
4. Height adjuster pin

Positioning the Seat

The seat can move forward and backward. Position the seat where you have the best control of the machine and are most comfortable.

1. Push the adjustment lever towards the center of the machine to release the seat adjuster track (Figure 16).

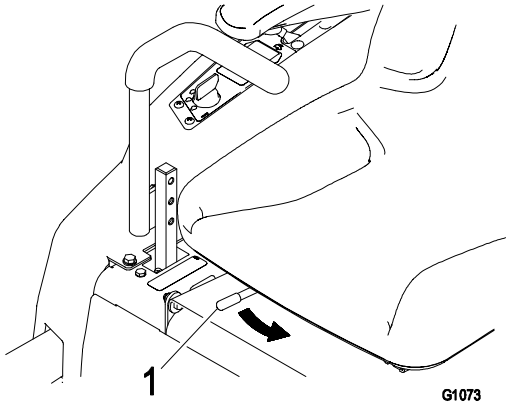

Figure 16

1. Adjustment lever

2. Move the seat to the desired position and release the lever to lock in that position.

Adjusting the Motion Control Levers

Adjusting the Height

The motion control levers can be adjusted higher or lower for maximum operator comfort.

1. Remove the 2 bolts holding the control lever to the control arm shaft (Figure 17).
2. Move the control lever to the next set of holes. Secure the lever with the 2 bolts (Figure 17).

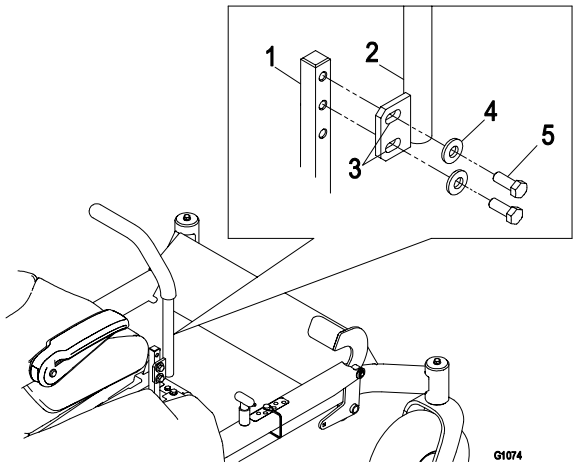

Figure 17

1. Control arm shaft
2. Control lever
3. Slotted holes
4. Washer
5. Bolt

3. Repeat the adjustment for the opposite control lever.

Adjusting the Tilt

The motion control levers can be tilted fore or aft for maximum operator comfort.

1. Loosen the upper bolt holding the control lever to the control arm shaft.
2. Loosen the lower bolt just enough to pivot the control lever fore or aft (Figure 17). Tighten both bolts to secure the control in the new position.
3. Repeat the adjustment for the opposite control lever.

Pushing the Machine by Hand

Important: Always push the machine by hand. Never tow the machine because damage may occur.

To Push the Machine

1. Park the machine on a level surface and disengage the blade control switch.
2. Move the motion control levers outward to neutral position, engage parking brake, stop the engine, remove the key, and wait for all moving parts to stop before leaving the operating position.
3. Locate the bypass release knobs on either side of the engine deck. (Figure 18)
4. Loosen the knob by turning counterclockwise. Then pull the release lever on the underside of machine (Figure 18) towards the back of the machine and retighten the knob to hold the release lever back in the released state. Repeat this on each side of the machine.
5. Release the parking brake.

   The machine is now able to be pushed by hand.

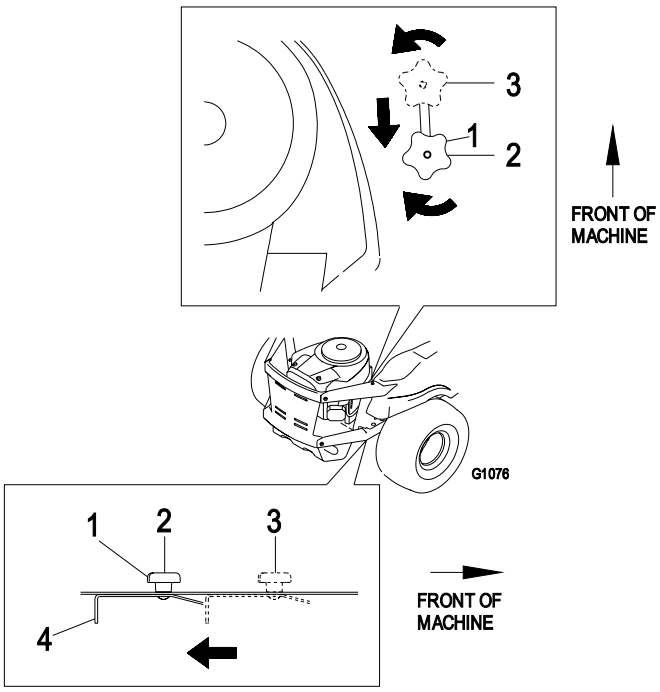

Figure 18

1. Bypass release knob location
2. Lever position for pushing the machine
3. Lever position for operating the machine
4. Release lever

To Operate the Machine

1. Loosen the bypass knob, push the release levers forward, and retighten the knob to engage the drive system (Figure 18).

Side Discharge

The mower has a hinged discharge deflector that disperses clippings to the side and down toward the turf.

Without the discharge deflector, mulch kit, or entire grass collection system mounted in place, you and others are exposed to blade contact and thrown debris. Contact with rotating mower blades and thrown debris will cause injury or death.

- **Never remove the discharge deflector from the mower because the discharge deflector routes material down toward the turf. If the discharge deflector is ever damaged, replace it immediately.**
- **Never put your hands or feet under the mower.**
- **Never try to clear discharge area or mower blade(s) unless you move the blade control switch to Off and rotate the ignition key to Off. Also remove the key and pull the wire off the spark plug(s).**

Operating Tips

Fast Throttle Setting

For best mowing and maximum air circulation, operate the engine at the Fast position. Air is required to thoroughly cut grass clippings, so do not set the height-of-cut so low as to totally surround the mower by uncut grass. Always try to have one side of the mower free from uncut grass, which allows air to be drawn into the mower.

Cutting a Lawn for the First Time

Cut grass slightly longer than normal to ensure that the cutting height of the mower does not scalp any uneven ground. However, the cutting height used in the past is generally the best one to use. When cutting grass longer than six inches tall, you may want to cut the lawn twice to ensure an acceptable quality of cut.

Cut 1/3 of the Grass Blade

It is best to cut only about 1/3 of the grass blade. Cutting more than that is not recommended unless grass is sparse, or it is late fall when grass grows more slowly.

Mowing Direction

Alternate mowing direction to keep the grass standing straight. This also helps disperse clippings which enhances decomposition and fertilization.

Mow at Correct Intervals

Normally, mow every four days. But remember, grass grows at different rates at different times. So to maintain the same cutting height, which is a good practice, mow more often in early spring. As the grass growth rate slows in mid summer, mow less frequently. If you cannot mow for an extended period, first mow at a high cutting height; then mow again two days later at a lower height setting.

Cutting Speed

To improve cut quality, use a slower ground speed.

Avoid Cutting Too Low

If the cutting width of the mower is wider than the mower you previously used, raise the cutting height to ensure that uneven turf is not cut too short.

Long Grass

If the grass is ever allowed to grow slightly longer than normal, or if it contains a high degree of moisture, raise the cutting height higher than usual and cut the grass at this setting. Then cut the grass again using the lower, normal setting.

When Stopping

If the machine's forward motion must be stopped while mowing, a clump of grass clippings may drop onto your lawn. To avoid this, move onto a previously cut area with the blades engaged.

Keep the Underside of the Mower Clean

Clean clippings and dirt from the underside of the mower after each use. If grass and dirt build up inside the mower, cutting quality will eventually become unsatisfactory.

Blade Maintenance

Maintain a sharp blade throughout the cutting season because a sharp blade cuts cleanly without tearing or shredding the grass blades. Tearing and shredding turns grass brown at the edges, which slows growth and increases the chance of disease. Check the cutter blades daily for sharpness, and for any wear or damage. File down any nicks and sharpen the blades as necessary. If a blade is damaged or worn, replace it immediately with a genuine Toro replacement blade. Only Toro blades are to be used with this unit. No other blades are approved.

Maintenance

Note: The left and right sides of the machine are determined while sitting in the seat in the normal operating position.

Recommended Maintenance Schedule(s)

Maintenance Service Interval	Maintenance Procedure
Before each use or daily	• Check the safety interlock system • Check the air cleaner for dirty, loose or damaged. • Check the engine oil level. • Check air intake and cooling areas, clean as necessary. • Check the cutting blades. • Clean the mower housing. • Check hydraulic oil level.
Every 25 hours	• Grease all lubrication points. • Service the paper element (more often under extremely dusty, dirty conditions). • Check tire pressure. • Check the belts for wear/cracks.
Every 50 hours	• Change the engine oil and filter.
Every 100 hours	• Replace the paper element (more often under extremely dusty, dirty conditions). • Clean the blower housing (more often under extremely dusty, dirty conditions). • Replace the fuel filter.
Every 200 hours	• Check spark plug condition and gap. • Change hydraulic system filter.
Every 500 hours	• Replace the spark plug.
Before storage	• Charge the battery and disconnect battery cables. • Perform all maintenance procedures listed above before storage. • Paint any chipped surfaces.

Important: Refer to your engine operator's manual for additional maintenance procedures.



If you leave the key in the ignition switch, someone could accidentally start the engine and seriously injure you or other bystanders.

- **Remove the key from the ignition and disconnect the wire from the spark plug before you do any maintenance. Set the wire aside so that it does not accidentally contact the spark plug.**

Premaintenance Procedures

Raising the Seat

Make sure the motion control levers are locked in the neutral position. Lift the seat forward until the lanyard is tight.

The following components can be accessed by raising the seat:

- Auxiliary 12V Plug

  (12V accessory up to 15 amp)
- Fuses
- Battery cables

Accessing the Battery

1. The battery is located under the seat. To access, raise the seat (Figure 19).

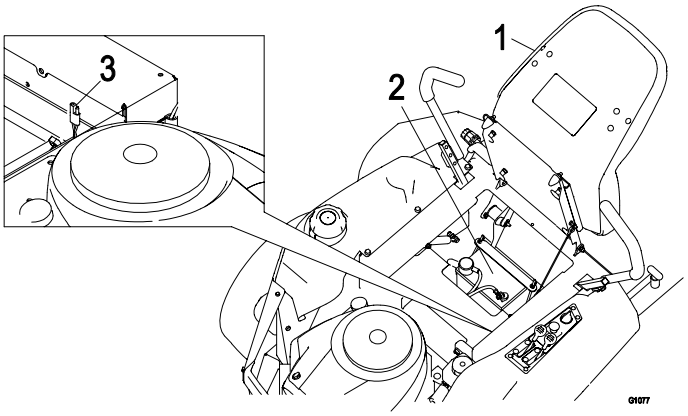

Figure 19

1. Seat
2. Battery
3. Auxiliary 12V Plug

Lubrication

Greasing the Bearings

Grease Type: NGLI grade #2 multi-purpose gun grease.

Grease the front caster pivots and wheels (Figure 20).

1. Park the machine on a level surface and disengage the blade control switch.
2. Move the motion control levers outward to the neutral position, engage parking brake, stop the engine, remove the key, and wait for all moving parts to stop before leaving the operating position.
3. Clean the grease fittings (Figure 20 and Figure 21) with a rag. Make sure to scrape any paint off of the front of the fitting(s).

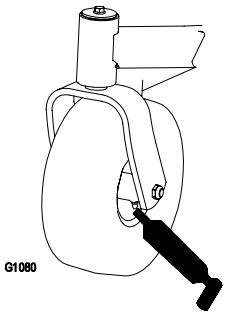

Figure 20

1. Front caster tire

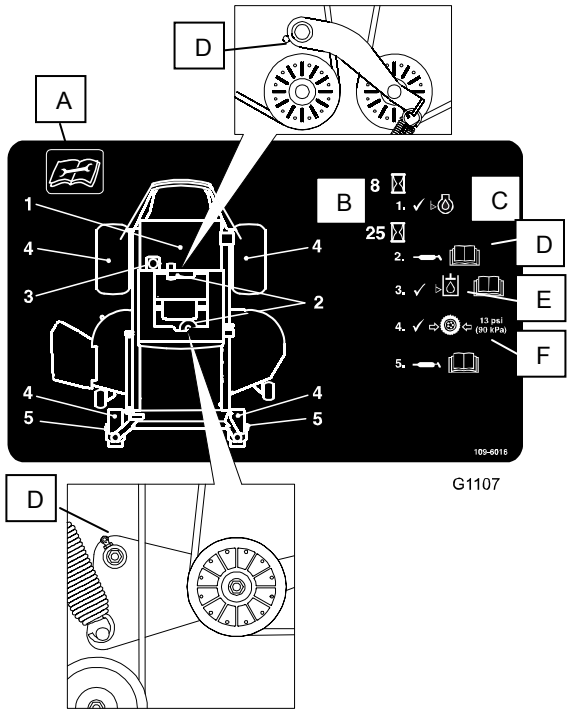

Figure 21

Located on the back of the seat

A. Read the instructions before servicing or performing maintenance.
B. Time interval.
C. Check oil level.
D. Grease idler pivots.
E. Check hydraulic oil level and refer to Operator's manual for further instructions.
F. Check tire pressure.

4. Connect a grease gun to each fitting (Figure 20 and Figure 21). Pump grease into the fittings until grease begins to ooze out of the bearings.
5. Wipe up any excess grease.

Engine Maintenance

Servicing the Air Cleaner

This engine is equipped with a replaceable, high density paper air cleaner element. Check the air cleaner daily or before starting the engine. Check for a buildup of dirt and debris around the air cleaner system. Keep this area clean. Also check for loose or damaged components. Replace all bent or damaged air cleaner components.

Note: Operating the engine with loose or damaged air cleaner components could allow unfiltered air into the engine causing premature wear and failure.

Note: Service the air cleaner more often under extremely dusty, dirty conditions.

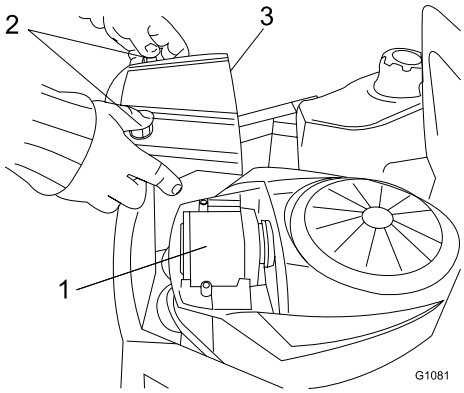

Figure 22

1. Air Cleaner
2. Knobs, air cleaner cover
3. Air cleaner cover

Servicing Paper Element

Check the paper element every 25 hours of operation (more often under extremely dusty or dirty conditions). Clean or replace the element as necessary. Replace the air cleaner element yearly, or every 100 hours.

1. Remove the air cleaner cover (Figure 22).
2. Remove the air cleaner element with the integral rubber seal (Figure 22).
3. Gently tap the pleated side of the paper element to dislodge dirt. Do not wash the paper element or use pressurized air, as this will damage the element. Replace a dirty, bent, or damaged element. Handle new elements carefully; do not use if the rubber seal or foam sleeve is damaged.
4. Clean all air cleaner components of any accumulated dirt or foreign material. Prevent any dirt from entering the carburetor.
5. Install the air cleaner element with the pleated side “out” and seat the rubber seal onto the edges of the air cleaner base (Figure 22).
6. Reinstall the air cleaner cover and secure with the two knobs (Figure 22).

Servicing the Engine Oil

Check the oil level daily or after every 8 hours.

Change oil after first 5 to 8 hours of use, then every 50 hours thereafter. Change oil every 25 hours when operating the engine under heavy load or in high temperatures.

Oil Type: Detergent oil (API service SF, SG, SH, SJ, or higher)

Crankcase Capacity: 2.0 qt (1.9 l) when the filter is changed

Choose a viscosity according to the table below.

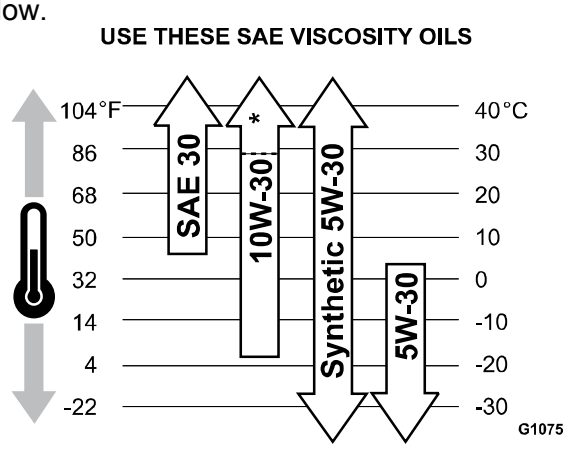

Figure 23

SAE 30 *40°F and higher (5°C and higher)* is good for all purpose use above 40°F. Use below 40° will cause hard starting.

10W-30 *0 to 100°F (-18 to 38°C)* is better for varying temperature conditions. This viscosity improves cold weather starting, but may increase oil consumption above 80°F *(27°C).*

*Check oil level frequently at higher temperatures.

Synthetic 5W-30 *-20 to 120°F (-30 to 40°C)* provides the best protection in all temperatures, as well as improved starting with less oil consumption.

5W-30 *40°F and below (5°C and below)* is recommended for winter use and works best in cold conditions.

Checking the Oil Level

1. Park the machine on a level surface, disengage the blade control switch, stop the engine, engage parking brake, and remove the key.
2. Make sure the engine is stopped, level, and is cool so the oil has had time to drain into the sump.
3. To keep dirt, grass clippings, etc., out of the engine, clean the area around the oil fill cap/dipstick before removing it.
4. Pull and remove the oil fill cap/dipstick; wipe oil off. Reinsert the dipstick and push firmly into place (Figure 24).

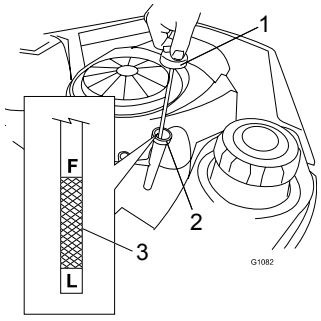

Figure 24

1. Oil dipstick
2. Filler tube
3. Oil level

5. Remove the dipstick and check the oil level. (Figure 24).

   The oil level should be up to, but not over, the **F** mark on the dipstick.
6. If the level is low, add oil of the proper type, up to the **F** mark on the dipstick. Always check the level with the dipstick before adding more oil.

Note: To prevent extensive engine wear or damage, always maintain the proper oil level in the crankcase. Never operate the engine with the oil level below the “L” mark or over the “F” mark on the dipstick.

Changing the Oil and the Filter

Change the oil filter annually or every 100 hours of operation. Refill with service class SF, SG, SH, SJ or higher oil as specified in the “Viscosity Grades” table.

Change the oil and filter while the engine is still warm. The oil will flow more freely and carry away more impurities. Make sure the engine is level when filling, checking, or changing the oil.

Change the oil and oil filter as follows:

1. Start the engine and let it run until warm. This warms the oil so it drains better.
2. Park the machine so that the drain side is slightly lower than the opposite side to assure the oil drains completely.
3. Disengage the blade control switch and move the motion controls outward to the neutral position and engage parking brake.
4. Stop the engine, remove the key, and wait for all moving parts to stop before leaving the operating position.
5. Clean the area around the drain plug and on the machine frame. Place a pan underneath machine directly below the drain hole in the frame as shown in Figure 24.

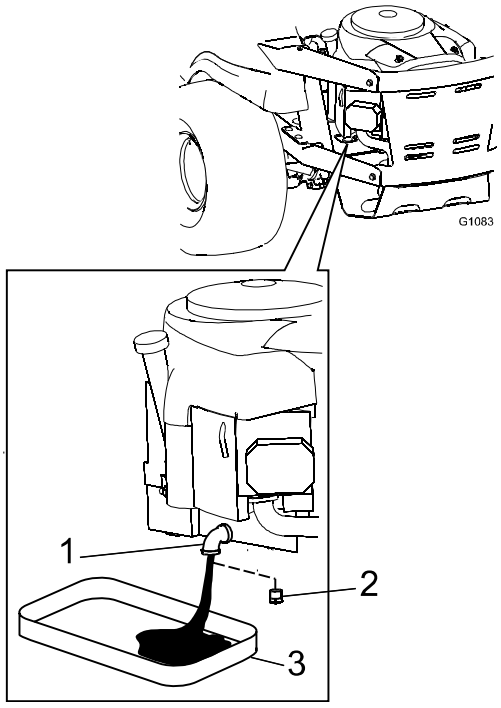

Figure 25

1. Oil drain
2. Oil drain plug
3. Pan

6. Remove the oil drain plug (Figure 25). Remove the oil fill cap/dipstick (Figure 24).
7. Be sure to allow ample time for complete drainage.
8. Remove the old filter and wipe off the mounting pad (Figure 26).
9. When the oil has drained completely, install the oil drain plug. Tighten the plug to 14 N-m (125 in-lb) torque. Wipe up any excess oil on the frame (Figure 25).

Note: Dispose of the used oil at a recycling center.

10. Apply a thin film of clean oil to the rubber gasket on the new filter.
11. Install the replacement oil filter to the mounting pad. Turn the oil filter clockwise until the rubber gasket contacts the pad, then tighten the filter an additional 1/2 to 3/4 turn (Figure 26).

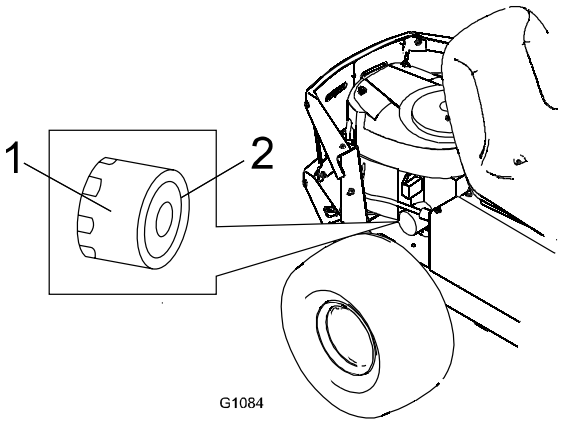

Figure 26

1. Oil filter
2. Gasket

12. Slowly pour approximately 80% of the specified oil into the filler tube (Figure 24).
13. Install the oil fill cap/dipstick and push firmly into place (Figure 24).
14. Check the oil level (Figure 24); refer to Checking the Oil Level.
15. Slowly add additional oil to bring it to the full mark.
16. Install the oil fill cap/dipstick and push firmly into place (Figure 24).

Checking the Hydraulic Oil Level

Check expansion tank and if necessary add MOBIL 1 15W-50 synthetic motor oil to the FULL COLD line.

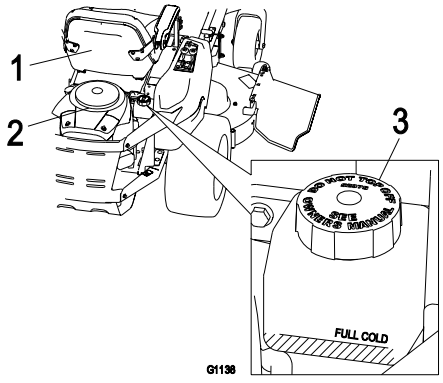

Figure 27

1. Seat
2. Engine
3. Expansion Tank

Change the Hydraulic System Filter

Service the hydraulic system filter after the first 200 hours of operation.

NOTE: Use only MOBIL 1 15W-50 Synthetic motor oil.

1. Stop engine, wait for all moving parts to stop, and allow engine to cool. Remove key and engage parking brake.
2. Locate the two (2) filters under the transmissions. Remove filter guards.
3. Carefully clean area around filters. It is ***important*** that ***no dirt*** or ***contamination*** enter hydraulic system.
4. Unscrew filters to remove and allow oil to drain from drive system.

IMPORTANT: Before reinstalling new filters, apply a thin coat of oil on the surface of the filters rubber seal.

Turn the filters clockwise until rubber seal contacts the filter adapter then tighten the filter an additional 3/4 to 1 full turn.

4. Remove the vent plug on each transmission and fill through expansion reservoir, when oil comes out of vent reinstall plug. Torque plugs to 180 in-lbs (244 N-m). Continue to add oil until it reaches the FULL COLD line on the expansion reservoir.

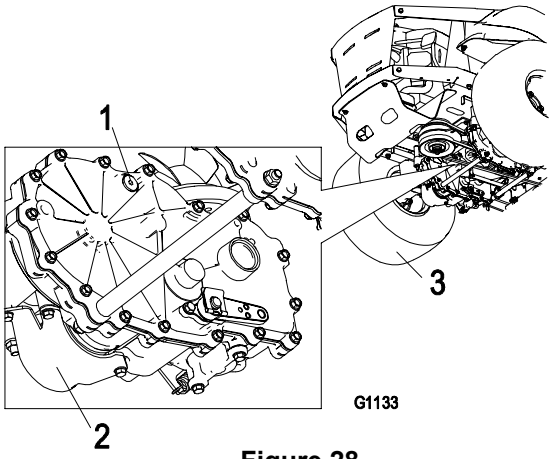

Figure 28

1. Vent Plug
2. Oil filter
3. Left rear tire

5. Raise the rear of machine up and support with jack stands (or equivalent support) just high enough to allow drive wheels to turn freely.
6. Start engine and move throttle control ahead to 1/2 throttle position. Disengage parking brake.
   a) With the bypass valve open and the engine running, slowly move the directional control in both forward and reverse (5 or 6 times).
   b) With the bypass valve closed and the engine running, slowly move the directional control in both forward and reverse directions (5 to 6 times). Check the oil level, and add oil as required after stopping the engine.
   c) It may be necessary to repeat Steps a) and b) until all the air is completely purged from the system. When the transaxle operates at normal noise levels and moves smoothly forward and reverse at normal speeds, then the transaxle is considered purged.

DO NOT change hydraulic system oil (except for what can be drained when changing filter), unless it is felt the oil has been contaminated or been extremely hot.

Changing oil unnecessarily could ***damage*** hydraulic system by introducing contaminates into the system.

Servicing the Spark Plug

Every 2 years or 200 hours of operation, remove the spark plug, check condition, and reset the gap or replace with a new plug as necessary. The spark plug is RFI compliant. Equivalent alternate brand plugs can also be used. Spark plug replacement is recommended at 500 hours.

Type: Champion XC92YC

Champion RC1ZYC or QC12C may be used if your area does not require compliance with Canadian ICES-002, ISO 14982, or EN 55012.

Air Gap: 0.030 inch (0.76 mm)

Removing the Spark Plug

1. Disengage the blade control switch, move the motion controls outward to the park position, stop the engine, and remove the key.
2. Pull the wire off of the spark plug (Figure 29). Clean around the spark plug to prevent dirt from falling into the engine and potentially causing damage.

Note: Due to the deep recess around the spark plug, blowing out the cavity with compressed air is usually the most effective method for cleaning. The spark plug is most accessible when the blower housing is removed for cleaning.

3. Remove the spark plug and metal washer.

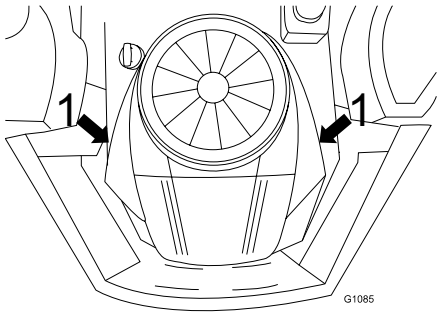

Figure 29

1. Spark plug and wire location

Checking the Spark Plug

1. Look at the center of the spark plug (Figure 30). If you see light brown or gray on the insulator, the engine is operating properly. A black coating on the insulator usually means the air cleaner is dirty.

Important: Never clean the spark plug. Always replace the spark plug when it has a black coating, worn electrodes, an oily film, or cracks.

2. Check the gap between the center and side electrodes (Figure 30). Bend the side electrode (Figure 30) if the gap is not correct.

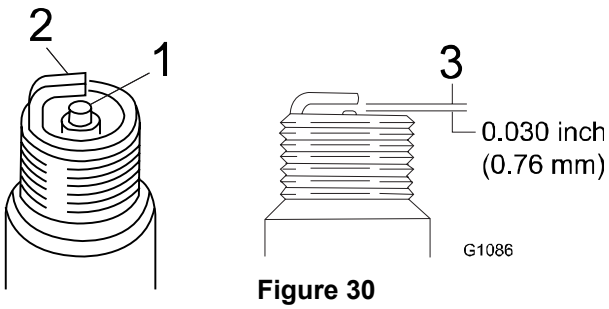

Figure 30

1. Center electrode insulator
2. Side electrode
3. Air gap (not to scale)

Installing the Spark Plug

1. Install the spark plug. Make sure that the air gap is set correctly.
2. Tighten the spark plug to 30 ft-lb(41 N-m).
3. Push the wire onto the spark plug (Figure 29).

Cleaning the Blower Housing

To ensure proper cooling, make sure the grass screen, cooling fins, and other external surfaces of the engine are kept clean at all times.

Annually or every 100 hours of operation (more often under extremely dusty, dirty conditions), remove the blower housing and any other cooling shrouds. Clean the cooling fins and external surfaces as necessary. Make sure the cooling shrouds are reinstalled. Torque the blower housing screws to 80 in-lb (9 N-m).

Important: Operating the engine with a blocked grass screen, dirty or plugged cooling fins, and/or cooling shrouds removed, will cause engine damage due to overheating.

Fuel System Maintenance

Replacing the Fuel Filter

In certain conditions, gasoline is extremely flammable and highly explosive. A fire or explosion from gasoline can burn you and others and can damage property.

- **Perform any fuel related maintenance when the engine is cold. Do this outdoors in an open area. Wipe up any gasoline that spills.**
- **Never smoke when draining gasoline, and stay away from an open flame or where a spark may ignite the gasoline fumes.**

Replace the fuel filter after every 100 operating hours or yearly, whichever occurs first.

Never install a dirty filter if it is removed from the fuel line.

1. Park the machine on a level surface and disengage the blade control switch.
2. Move the motion control levers outward to the neutral position, engage parking brake, stop the engine, remove the key, and wait for all moving parts to stop before leaving the operating position.
3. The fuel filter is in the fuel line between the tank and engine.

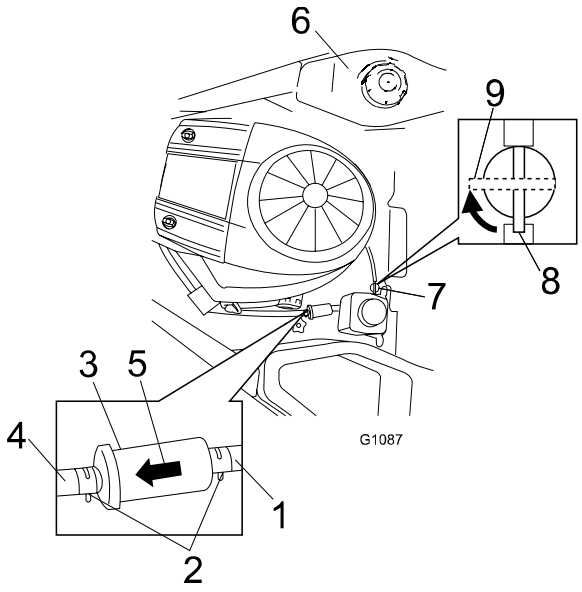

Figure 31

1. Fuel line from tank
2. Hose clamp
3. Filter
4. Fuel line to engine
5. Flow direction arrow
6. Fuel tank
7. Fuel shut off valve
8. Fuel shut off valve – On
9. Fuel shut off valve – Off

4. Turn fuel shut off valve 90° to “off” position.
5. Squeeze the ends of the hose clamps together and slide them away from the filter (Figure 31).
6. Remove the filter from the fuel lines.
7. Install a new filter with the flow direction arrow coming from the fuel tank and pointing to the engine. Move the hose clamps close to the filter (Figure 31) to secure it in place.
8. Turn fuel shut off valve back to “on” position.

Electrical System Maintenance

CALIFORNIA
Proposition 65 Warning

Battery posts, terminals, and related accessories contain lead and lead compounds, chemicals known to the State of California to cause cancer and reproductive harm. Wash hands after handling.

Charging the Battery

Removing the Battery

Battery terminals or metal tools could short against metal machine components causing sparks. Sparks can cause the battery gasses to explode, resulting in personal injury.

- **When removing or installing the battery, do not allow the battery terminals to touch any metal parts of the machine.**
- **Do not allow metal tools to short between the battery terminals and metal parts of the machine.**

1. Park the machine on a level surface and disengage the blade control switch.
2. Move the motion control levers outward to the neutral position, engage parking brake stop the engine, remove the key, and wait for all moving parts to stop before leaving the operating position.
3. Raise the seat.
4. Disconnect the negative (black) ground cable from the battery post (Figure 32). Retain all fasteners.

Incorrect battery cable routing could damage the machine and cables causing sparks. Sparks can cause the battery gasses to explode, resulting in personal injury.

- **Always disconnect the negative (black) battery cable before disconnecting the positive (red) cable.**
- **Always connect the positive (red) battery cable before connecting the negative (black) cable.**

5. Slide the rubber cover up the positive (red) cable. Disconnect the positive (red) cable from the battery post (Figure 32). Retain all fasteners.
6. Remove the battery hold-down (Figure 32) and lift the battery from the battery tray.

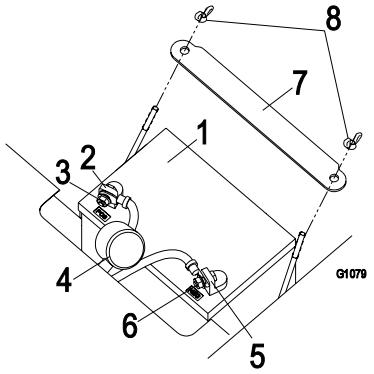

Figure 32

1. Battery
2. Positive battery post
3. Bolt, washer, and nut
4. Terminal boot
5. Negative battery post
6. Bolt, washer, and nut
7. Battery hold-down
8. Wingnut

Charging the Battery

1. Remove the battery from the chassis; refer to Removing the Battery.
2. Allowing batteries to stand for an extended period without recharging them will result in reduced performance and service life. To preserve optimum battery performance and life, recharge batteries in storage when the open circuit voltage drops to 12.4 volts.

NOTE: To prevent damage due to freezing, battery should be fully charged before putting away for winter storage.

3. Check the voltage of the battery with a digital voltmeter. Locate the voltage reading of the battery in the table below and charge the battery for the recommended time interval to bring the charge up to a full charge of 12.6 volts or greater.

   IMPORTANT: Make sure the negative battery cables are disconnected and the battery charger used for charging the battery has an output of 16 volts and 7 amps or less to avoid damaging the battery (see chart below for recommended charger settings).

Voltage Reading	Percent Charge	Maximum Charger Settings	Charging Interval
12.6 or greater	100%	16 volts / 7 amps	No Charging Required
12.4 – 12.6	75 – 100%	16 volts / 7 amps	30 Minutes
12.2 – 12.4	50 – 75%	16 volts / 7 amps	1 Hour
12.0 – 12.2	25 – 50%	14.4 volts / 4 amps	2 Hours
11.7 – 12.0	0 – 25%	14.4 volts / 4 amps	3 Hours
11.7 or less	0%	14.4 volts / 2 amps	6 Hours or More

4. When the battery is fully charged, unplug the charger from the electrical outlet, then disconnect the charger leads from the battery posts (Figure 33).

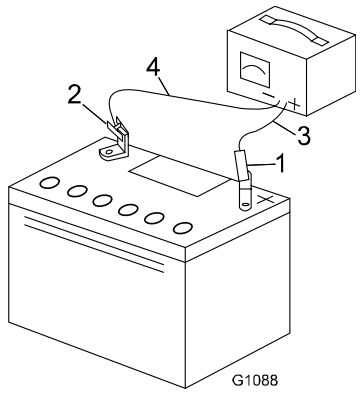

Figure 33

1. Positive battery post
2. Negative battery post
3. Red (+) charger lead
4. Black (-) charger lead

Note: Do not run the machine with the battery disconnected, electrical damage may occur.

Installing the Battery

1. Position the battery in the tray with the terminal posts toward the operating position (Figure 32).
2. Install the positive (red) battery cable to the positive (+) battery terminal using the fasteners removed previously.
3. Slide the red terminal boot onto the positive (red) battery post.
4. Install the negative battery cable to the negative (-) battery terminal using the fasteners removed previously.
5. Secure the battery with the hold-down (Figure 32).

Servicing the Fuses and Relay

The electrical system is protected by fuses. It requires no maintenance; however, if a fuse blows, check the component/circuit for a malfunction or short. There is also a replaceable relay next to the fuse. Refer to your Parts manual for correct replacement relay.

Fuse:

- Main 25 amp, blade-type
- Charge Circuit 20 amp, blade-type

1. Raise the seat to gain access to the fuse holder (Figure 34).
2. Remove cover as shown in (Figure 34).
3. To replace a fuse, pull out on the fuse to remove it (Figure 34).

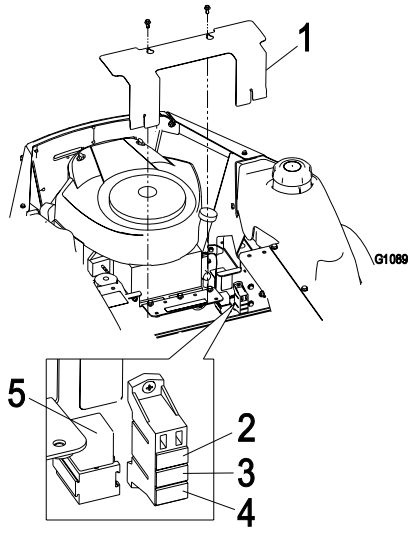

Figure 34

1. Cover
2. Auxilliary-15 amp
3. Charge-20 amp
4. Main-25 amp
5. Relay

Drive System Maintenance

Checking the Tire Pressure

Maintain the air pressure in the front and rear tires as specified. Uneven tire pressure can cause uneven cut. Check the pressure at the valve stem after every 25 operating hours or monthly, whichever occurs first (Figure 35). Check the tires when they are cold to get the most accurate pressure reading.
Rear Tires: 13 psi (90 kPa)
Front Tires (caster wheels): 13 psi (90 kPa)

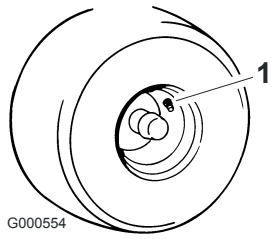

Figure 35

1. Valve stem

Mower Maintenance

Servicing the Cutting Blades

Maintain sharp blades throughout the cutting season because sharp blades cut cleanly without tearing or shredding the grass blades. Tearing and shredding turns grass brown at the edges, which slows growth and increases the chance of disease.

Check the cutter blades daily for sharpness, and for any wear or damage. File down any nicks and sharpen the blades as necessary. If a blade is damaged or worn, replace it immediately with a genuine Toro replacement blade. For convenient sharpening and replacement, you may want to keep extra blades on hand.

A worn or damaged blade can break, and a piece of the blade could be thrown into the operator's or bystander's area, resulting in serious personal injury or death.

- **Inspect the blade periodically for wear or damage.**
- **Replace a worn or damaged blade.**

Before Inspecting or Servicing the Blades

Park the machine on a level surface, disengage the blade control switch, and move the motion control levers outward to the neutral position and engage parking brake. Stop the engine, remove the key, and disconnect the spark plug wire(s) from the spark plug(s).

Inspecting the Blades

1. Inspect the cutting edges (Figure 36). If the edges are not sharp or have nicks, remove and sharpen the blades; refer to Sharpening the Blades.
2. Inspect the blades, especially the curved area (Figure 36). If you notice any damage, wear, or a slot forming in this area (item 3 in Figure 36), immediately install a new blade.

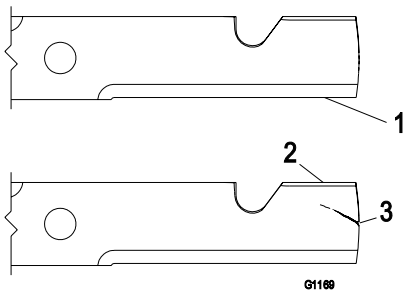

Figure 36

1. Cutting edge
2. Curved area
3. Wear/slot forming

Checking for Bent Blades

1. Rotate the blades until the ends face forward and backward (Figure 37). Measure from a level surface to the cutting edge, of the blades (Figure 37). Note this dimension.

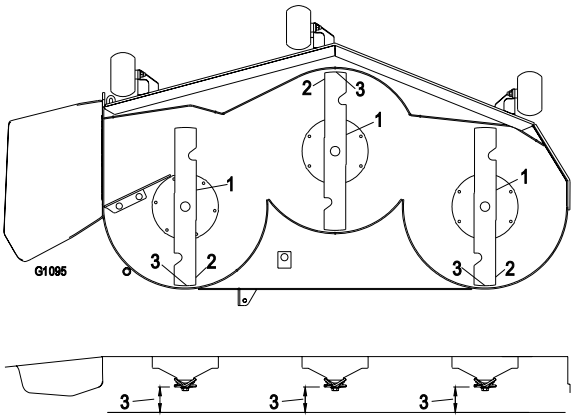

Figure 37

1. Blades front to rear
2. Outside cutting edges
3. Measure here

2. Rotate the opposite ends of the blades forward.
3. Measure from a level surface to the cutting edge of the blades at the same position as in step 1. The difference between the dimensions obtained in steps 1 and 3 must not exceed 1/8 inch (3 mm). If this dimension exceeds 1/8 inch (3 mm), the blade is bent and must be replaced. Refer to Removing the Blades and Installing the Blades.

A blade that is bent or damaged could break apart and could seriously injure or kill you or bystanders.

- **Always replace bent or damaged blade with a new blade.**
- **Never file or create sharp notches in the edges or surfaces of blade.**

Checking for Loose Blades or Damaged Spring Disk Washers

1. Place a wrench on the blade bolt and torque to 45-55ft lbs (61-75 N-m).
2. With the wrench still on the blade bolt, hold the blade spindle stationary and using a rag or thickly padded glove, try to rotate the blade. If the blade rotates relative to the spindle guard without further tightening the blade bolt, the two spring disk washers have been flattened or damaged and must be replaced (Figure 38). Refer to Removing and Installing the Blades.
3. Once the blade has been removed, inspect the two spring disk washers. If the washers appeared to be damaged (the washer surface has been marred) or flattened they must be replaced. (Figure 38).

Note: If the blade hits a solid object, the blade bolt will tighten. The tightened blade bolt may flatten or even invert the spring disk washers, possibly causing damage. A damaged spring disk washer must be replaced.

Removing the Blades

The blades must be replaced if a solid object is hit, if the blade is out of balance, or the blade is bent. To ensure optimum performance and continued safety conformance of the machine, use genuine Toro replacement blades. Replacement blades made by other manufacturers may result in an unsafe machine.

Hold the blade end using a rag or thickly-padded glove (or place a wrench on the top sheave nut). Remove the blade bolt, two spring disk washers, bushing, and blade from the spindle shaft (Figure 38).

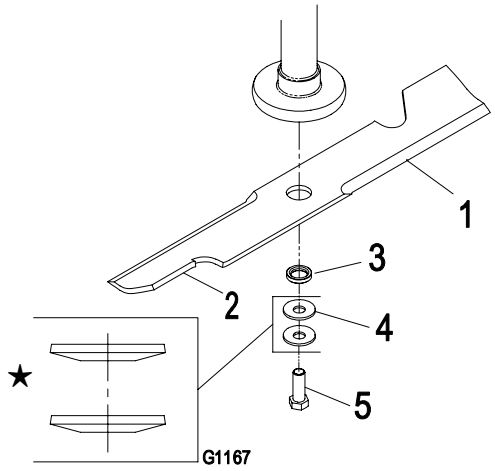

Figure 38

1. Blade
2. Sail area of blade
3. Bushing
4. Spring disk washers
5. Blade bolt
★ Orientation of washers

Sharpening the Blades

1. Use a file to sharpen the cutting edge at both ends of the blade (Figure 39). Maintain the original angle. The blade retains its balance if the same amount of material is removed from both cutting edges.



Figure 39

1. Sharpen at original angle

2. Check the balance of the blade by putting it on a blade balancer (Figure 40). If the blade stays in a horizontal position, the blade is balanced and can be used. If the blade is not balanced, file some metal off the end of the sail area only (Figure 39). Repeat this procedure until the blade is balanced.

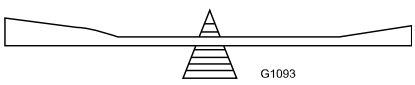

Figure 40

Installing the Blades

1. Install the blade onto the spindle shaft (Figure 38).

   Important: The curved part of the blade must be pointing upward toward the inside of the mower to ensure proper cutting.

2. Hold the blade end using a rag or thickly-padded glove (or place a wrench on the top sheave nut). Install the bushing, two spring disk washers (cupped side toward the blade) and blade bolt (Figure 38).
3. Torque the blade bolt to 45-55 ft-lbs (61-75 N-m).

Incorrect installation of the blade or components used to retain the blade cause the blade to come loose and could seriously injure or kill you or bystanders.

- **Always install the original Toro blades, blade bushing, spring disk washers and blade bolts as shown.**

Leveling the Mower Deck

The mower blades must be level from side to side. Check the side-to-side level any time you install the mower or when you see an uneven cut on your lawn.

1. Park the machine on a level surface and disengage the blade control switch.
2. Move the motion control levers outward to the neutral position, engage parking brake, stop the engine, remove the key, and wait for all moving parts to stop before leaving the operating position.
3. Check the air pressure of all four tires. If needed, adjust to the recommended inflation; refer to Checking the Tire Pressure in Drive System Maintenance. If either one is out of range then follow adjustment procedure.
4. Carefully rotate the blades side to side (Figure 41).

5. Measure between the outside cutting edges and the flat surface (Figure 41). If both measurements are not within 3/16 inch (5mm), an adjustment is required; continue with this procedure.
6. Check the front-to-rear blade level any time you install the mower. If the front blade tip is not 1/16-5/16 inch (1.6-7.9 mm) lower than the rear blade tip, adjust the blade level. If measurements from step 5 or 6 are out of range, then follow Adjusting the Blade Slope.
7. Set anti-scalp rollers to top holes or remove completely for this adjustment.
8. Set the height-of-cut lever to the 3 inch (76 mm) position. Place two 2 1/2" (6.35 cm) thick blocks under the rear edge of the cutting deck skirt; one on each side of the cutting deck. Place two 2 5/16" (5.89 cm) blocks under each side of the front edge of the deck, but not under the anti-scalp roller brackets.
9. Carefully rotate the blades side to side (Figure 41).

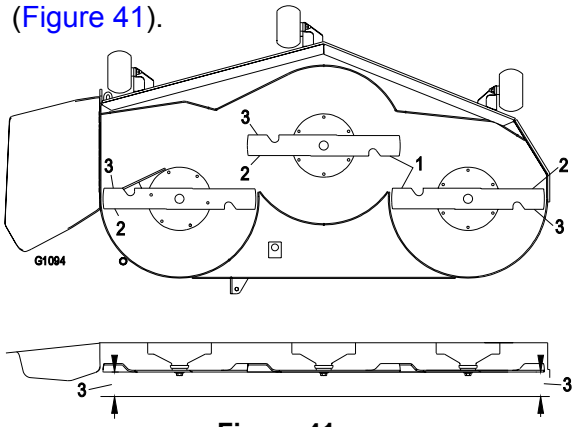

Figure 41

1. Blades side to side
2. Outside cutting edges
3. Measure here

10. Loosen the leveling adjust locking nuts (item 3) on all four corners so that the deck is sitting securely on all four blocks. Make sure that the deck hangers are all the way down (at the top of the slot) and the deck lift foot lever is pushed back against the stop, then tighten the four leveling adjust locking nuts (Figure 42).
11. Recheck that blocks fit just snugly under the deck skirt. Make sure all attachment bolts are tight.
12. Continue leveling the deck by checking the front-to-rear blade slope; refer to Adjusting the Front-to-Rear Blade Slope.
13. Recheck blades for levelness and repeat deck leveling procedure if necessary.

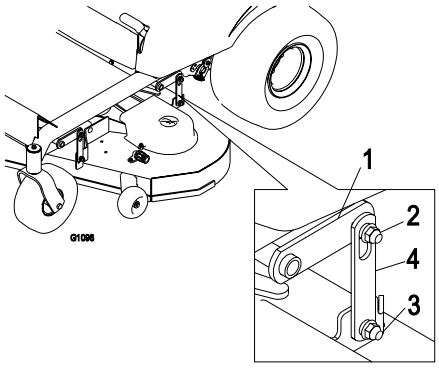

Figure 42

1. Deck lift arm
2. Float retaining nut
3. Leveling adjust locking nut
4. Deck hanger

Adjusting the Blade Slope

1. Check the front-to-rear blade level any time you install the mower. If the front blade tip is not 1/16-5/16 inch (1.6-7.9 mm) lower than the rear blade tip, adjust the blade level using the following instructions:
2. Park the machine on a level surface and disengage the blade control switch.
3. Move the motion control levers outward to the neutral position, engage the parking brake, stop the engine, remove the key, and wait for all moving parts to stop before leaving the operating position.
4. Check the air pressure of all four tires. If needed, adjust to the recommended inflation; refer to Checking the Tire Pressure in Drive System Maintenance.
5. Check and adjust the side-to-side blade level if you have not checked the setting; refer to Leveling the Mower from Side-to-Side.

6. Set the height-of-cut lever to the 3 inch (76 mm) position. Place two 2 1/2” (6.35 cm) thick blocks under the rear edge of the cutting deck skirt; one on each side of the cutting deck. Place two 2 5/16” (5.89 cm) blocks under each side of the front edge of the deck, but not under the anti-scalp roller brackets.
7. Loosen the leveling adjust locking nuts (item 3) on all four corners so that the deck is sitting securely on all four blocks. Make sure that the deck hangers are all the way down (at the top of the slot) and the deck lift foot lever is pushed back against the stop, then tighten the four leveling adjust locking nuts (Figure 44).
8. Carefully rotate the blades so they are facing front to rear (Figure 43).
9. Measure from the tip of the front blade to the flat surface and the tip of the rear blade to the flat surface (Figure 43). If the front blade tip is not 1/16-5/16 inch (1.6-7.9 mm) lower than the rear blade tip, adjust the front deck hanger.

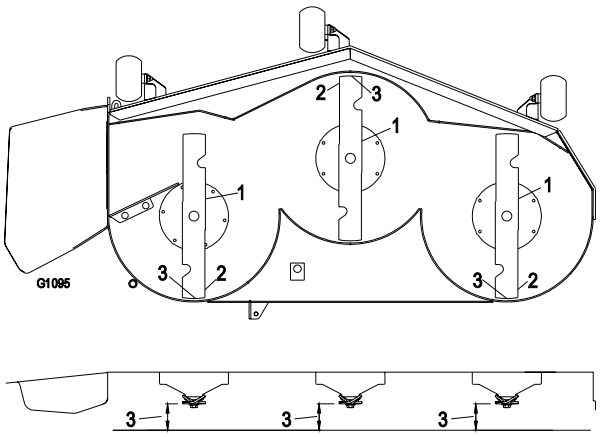

Figure 43

1. Blades front to rear
2. Outside cutting edges
3. Measure here

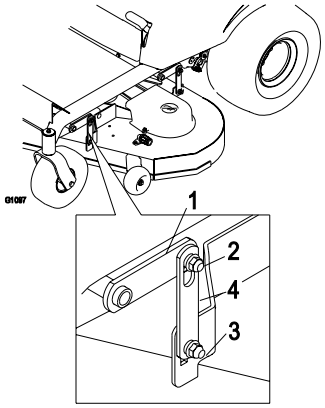

Figure 44

1. Deck lift arm
2. Float retaining nut
3. Leveling adjust locking nut
4. Deck hanger

10. When the front-to-rear blade slope is correct check the side-to-side level of the mower again; refer to Leveling the Mower from Side-to-Side.

Removing the Mower Deck

1. Park the machine on a level surface and disengage the blade control switch.
2. Move the motion control levers outward to the neutral position, engage parking brake, stop the engine, remove the key, and wait for all moving parts to stop before leaving the operating position.
3. Place blocks under deck for support. Lower the height-of-cut lever to the lowest position.
4. Remove the hardware from the deck hanger and deck lift arm on both sides of the deck (Figure 45).

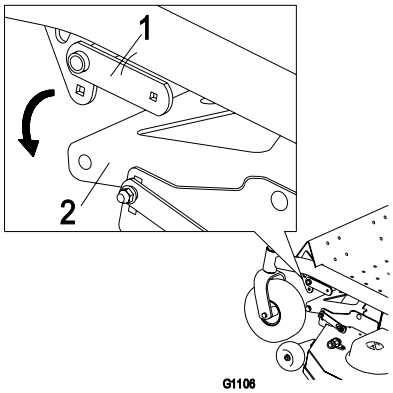

Figure 45

1. Deck lift arm
2. Deck hanger

5. Remove the nut, bolt, and pivot bushing from the deck strut (Figure 45). Carefully lower the front of the mower deck to the ground (Figure 46).

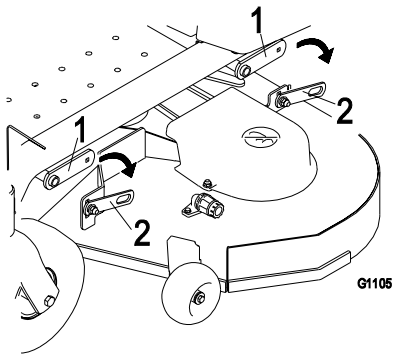

Figure 46

1. Deck lift arm
2. Deck strut

6. Slide the mower rearward to remove the mower belt from the engine pulley.
7. Slide the mower out from underneath the machine.

Note: Retain all parts for future installation.

Mower Belt Maintenance

Inspecting the Belts

Inspect all belts every 25 hours.

Check the belts for cracks, frayed edges, burn marks, or any other damage. Replace damaged belts.

Replacing the Mower Belt

Squealing when the belt is rotating, blades slipping when cutting grass, frayed belt edges, burn marks, and cracks are signs of a worn mower belt. Replace the mower belt if any of these conditions are evident.

1. Park the machine on a level surface and disengage the blade control switch.
2. Move the motion control levers outward to the neutral position, engage parking brake, stop the engine, remove the key, and wait for all moving parts to stop before leaving the operating position.
3. Set the height-of-cut at 1-1/2 inch (38 mm).
4. Remove the belt covers over the outside spindles.
5. Pull the idler pulley in the direction shown in Figure 45 and roll the belt off of the pulleys.

The spring is under tension when installed and can cause personal injury.

Be careful when removing the belt.

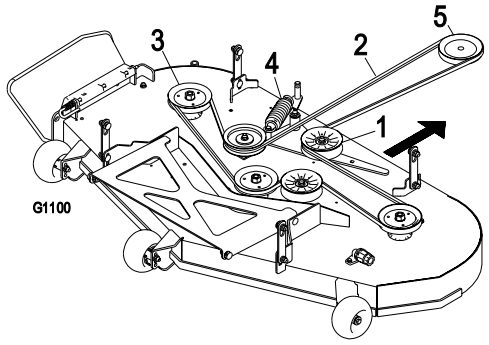

Figure 47

1. Idler pulley
2. Mower belt
3. Outside pulley
4. Spring
5. Engine pulley

6. Route the new belt around the engine pulley and mower pulleys (Figure 47).
7. Pull the idler pulley in the direction shown in Figure 47 and route the belt onto the idler pulley (Figure 47).
8. Install the belt covers over the outside spindles.

Installing the Mower Deck

1. Park the machine on a level surface and disengage the blade control switch.
2. Move the motion control levers outward to the neutral position, engage parking brake, stop the engine, remove the key, and wait for all moving parts to stop before leaving the operating position.
3. Slide the mower under the machine.
4. Lower the height-of-cut lever to the lowest position.

5. Use the existing hardware to attach the rear deck strut of the mower to the deck lift arm (Figure 46).
6. Attach the hardware from the deck hanger and deck lift arm on both sides of the deck (Figure 45).
7. Install the mower belt onto the engine pulley; refer to Replacing the Mower Belt.

Replacing the Discharge Deflector

An uncovered discharge opening could allow the lawn mower to throw objects in the operator's or bystander's direction and result in serious injury. Also, contact with the blade could occur.

Never operate the lawn mower unless you install a mulch plate, discharge deflector, or grass collection system.

1. Locate items shown in Figure 48.
2. Slide the rod out of the short stand-off, spring, and discharge deflector (Figure 48). Remove the damaged or worn discharge deflector.
3. Install new discharge deflector (Figure 48).
4. Orient the spring so that the short leg points towards the discharge deflector and the longer leg points towards the deck as shown in Figure 48. Place spring on rod and slide rod, straight end, through the front discharge deflector bracket, discharge deflector, and rear deflector bracket.
5. Make sure that the spring and rod are installed so that the rod is retained from sliding out by the front bracket and the spring holds the discharge deflector in the down position. Refer to (Figure 48) for proper orientation.

Important: The discharge deflector must be spring loaded in the down position. Lift the deflector up to test that it snaps to the full down position.

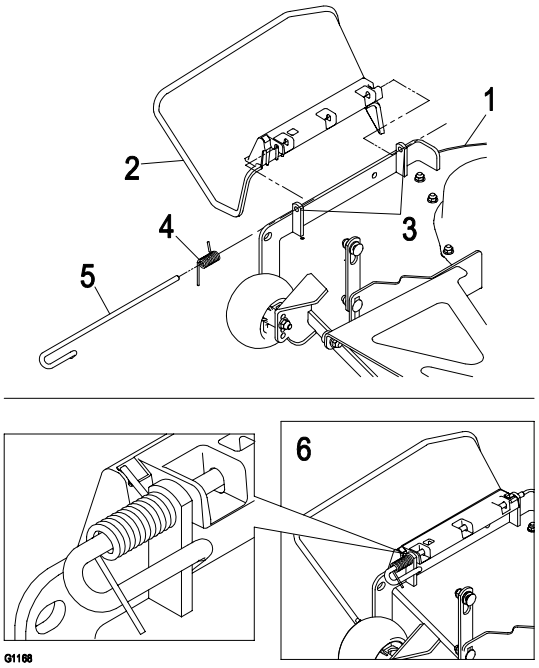

Figure 48

1. Mower deck
2. Discharge deflector
3. Discharge deflector bracket
4. Spring
5. Rod
6. Assembled view

Cleaning

Washing the Underside of the Mower

After each use, wash the underside of the mower to prevent grass buildup for improved mulch action and clipping dispersal.

1. Park the machine on a level surface and disengage the blade control switch.
2. Move the motion control levers outward to the neutral position, engage parking brake, stop the engine, remove the key, and wait for all moving parts to stop before leaving the operating position.
3. Attach the hose coupling to the end of the mower washout fitting, and turn the water on high (Figure 49).

Note: Spread petroleum jelly on the washout fitting O-ring to make the coupling slide on easier and protect the O-ring.

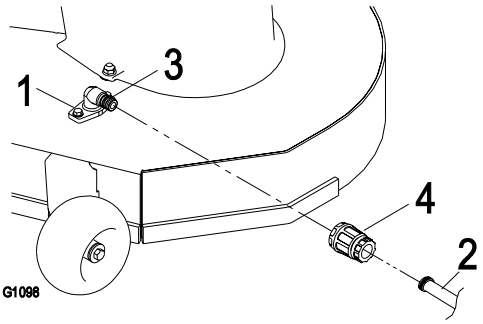

Figure 49

1. Washout fitting
2. Hose
3. O-Ring
3. Coupling

4. Lower the mower to the lowest height-of-cut.
5. Sit on the seat and start the engine. Engage the blade control switch and let the mower run for one to three minutes.
6. Disengage the blade control switch, stop the engine, and remove the ignition key. Wait for all moving parts to stop.
7. Turn the water off and remove the coupling from the washout fitting.

Note: If the mower is not clean after one washing, soak it and let it stand for 30 minutes. Then repeat the process.

8. Run the mower again for one to three minutes to remove excess water.

A broken or missing washout fitting could expose you and others to thrown objects or blade contact. Contact with blade or thrown debris can cause injury or death.

- **Replace broken or missing washout fitting immediately, before using mower again.**
- **Plug any hole(s) in mower with bolts and locknuts.**
- **Never put your hands or feet under the mower or through openings in the mower.**

Storage

Cleaning and Storage

1. Disengage the blade control switch, move the motion controls outward to the neutral position, engage parking brake, stop the engine, and remove the key.
2. Remove grass clippings, dirt, and grime from the external parts of the entire machine, especially the engine. Clean dirt and chaff from the outside of the engine cylinder head fins and blower housing.

   Important: You can wash the machine with mild detergent and water. Do not pressure wash the machine. Avoid excessive use of water, especially near the control panel, engine, hydraulic pumps, and motors.
3. Service the air cleaner; refer to Servicing the Air Cleaner in Engine Maintenance.
4. Grease and oil the machine; refer to Lubrication.
5. Change the crankcase oil and filter; refer to Servicing the Engine Oil in Engine Maintenance.
6. Check the tire pressure; refer to Checking the Tire Pressure in Drive System Maintenance.
7. Charge the battery; refer to Servicing the Battery in Electrical System Maintenance.
8. Check the condition of the blades; refer to Servicing the Cutting Blades in Mower Maintenance.
9. Prepare the machine for storage when non-use occurs over 30 days. Prepare the machine for storage as follows.
10. Add a petroleum based stabilizer/conditioner to the fuel in the tank. Follow the mixing instructions from the stabilizer manufacturer. Do not use an alcohol based stabilizer (ethanol or methanol).

Note: A fuel stabilizer/conditioner is most effective when mixed with fresh gasoline and used at all times.

Run the engine to distribute the conditioned fuel through the fuel system (5 minutes).

Stop the engine, allow it to cool, and drain the fuel tank.

Restart the engine and run it until it stops.

Choke the engine. Start and run the engine until it will not start.

Dispose of fuel properly. Recycle as per local codes.

Important: Do not store stabilizer/conditioned gasoline over 30 days.

11. Remove the spark plug(s) and check its condition; refer to Servicing the Spark Plug in Engine Maintenance. With the spark plug(s) removed from the engine, pour two tablespoons of engine oil into the spark plug hole. Use the starter to crank the engine and distribute the oil inside the cylinder. Install the spark plug(s). Do not install the wire on the spark plug(s).
12. Clean any dirt and chaff from the top of the mower.
13. Scrape any heavy buildup of grass and dirt from the underside of the mower, then wash the mower with a garden hose.
14. Check the condition of the drive and mower belts.
15. Check and tighten all bolts, nuts, and screws. Repair or replace any part that is worn or damaged.
16. Paint all scratched or bare metal surfaces. Paint is available from your Authorized Service Dealer.
17. Store the machine in a clean, dry garage or storage area. Remove the key from the ignition switch and keep it in a memorable place. Cover the machine to protect it and keep it clean.

Troubleshooting

Problem	Possible Cause	Corrective Action
The engine overheats.	1. The engine load is excessive. 2. The oil level in the crankcase is low. 3. The cooling fins and air passages under the engine blower housing are plugged. 4. The air cleaner is dirty. 5. Dirt, water, or stale fuel is in fuel system.	1. Reduce ground speed. 2. Add oil to the crankcase. 3. Remove the obstruction from the cooling fins and air passages. 4. Clean or replace the air cleaner element. 5. Contact an Authorized Service Dealer.
The starter does not crank	1. The blade control switch is engaged. 2. The motion control levers are not in the park position. 3. The operator is not seated. 4. The battery is dead. 5. The electrical connections are corroded or loose. 6. A fuse is blown. 7. A relay or switch is damaged.	1. Move the blade control switch to Disengaged. 2. Move the motion control levers outward to the park position. 3. Sit on the seat. 4. Charge the battery. 5. Check the electrical connections for good contact. 6. Replace the fuse. 7. Contact an Authorized Service Dealer.
The engine will not start, starts hard, or fails to keep running.	1. The fuel tank is empty. 2. The choke is not on. 3. The air cleaner is dirty. 4. The spark plug wire(s) is loose or disconnected. 5. The spark plug(s) is pitted, fouled, or the gap is incorrect. 6. There is dirt in fuel filter. 7. Dirt, water, or stale fuel is in fuel system. 8. There is incorrect fuel in the fuel tank. 9. The oil level in the crankcase is low.	1. Fill the fuel tank. 2. Move the choke lever to On. 3. Clean or replace the air cleaner element. 4. Install the wire(s) on the spark plug. 5. Install a new, correctly gapped spark plug(s). 6. Replace the fuel filter. 7. Contact an Authorized Service Dealer. 8. Drain the tank and replace the fuel with the proper type. 9. Add oil to the crankcase.

Problem	Possible Cause	Corrective Action
The engine loses power.	1. The engine load is excessive. 2. The air cleaner is dirty. 3. The oil level in the crankcase is low. 4. The cooling fins and air passages under the engine blower housing are plugged. 5. The spark plug(s) is pitted, fouled, or the gap is incorrect. 6. The vent in the fuel cap is closed. 7. There is dirt in the fuel filter. 8. Dirt, water, or stale fuel is in the fuel system. 9. There is incorrect fuel in the fuel tank.	1. Reduce ground speed. 2. Clean the air cleaner element. 3. Add oil to the crankcase. 4. Remove the obstruction from the cooling fins and air passages. 5. Install a new, correctly gapped spark plug(s). 6. Open the vent in the fuel cap. 7. Replace the fuel filter. 8. Contact an Authorized Service Dealer. 9. Drain the tank and replace the fuel with the proper type.
The machine does not drive.	1. The drive belts are worn, loose, or broken. 2. The drive belts are off of the pulleys. 3. The drive is in bypass mode.	1. Contact an Authorized Service Dealer. 2. Contact an Authorized Service Dealer. 3. Take machine out of bypass mode. Refer to “Pushing the Machine by Hand.”
There is abnormal vibration.	1. The engine mounting bolts are loose. 2. The engine pulley, idler pulley, or blade pulley is loose. 3. The engine pulley is damaged. 4. The cutting blade(s) is/are bent or unbalanced. 5. A blade is loose. 6. A blade bushing is missing. 7. A blade spindle is bent.	1. Tighten the engine mounting bolts. 2. Tighten the appropriate pulley. 3. Contact an Authorized Service Dealer. 4. Install a new cutting blade(s). 5. Tighten the blade mounting bolt and inspect the blade spring disk washers for damage (See Servicing the Cutting Blades, page 37). 6. Install a blade bushing (See Figure 38, page 39). 7. Contact an Authorized Service Dealer.

Problem	Possible Cause	Corrective Action
Uneven cutting height or poor quality of cut.	1. The blade(s) is not sharp. 2. A cutting blade(s) is/are bent. 3. A blade is loose. 4. The mower is not level. 5. An anti-scalp wheel is not set correctly. 6. The underside of the mower is dirty. 7. The tire pressure is incorrect. 8. A blade spindle is bent.	1. Sharpen the blade(s). 2. Install a new cutting blade(s). 3. Tighten the blade mounting bolt and inspect the blade spring disk washers for damage (See Servicing the Cutting Blades, page 37). 4. Level the mower from side-to-side and front-to-rear. 5. Adjust the anti-scalp wheel height. 6. Clean the underside of the mower. 7. Adjust the tire pressure. 8. Contact an Authorized Service Dealer.
The blades do not rotate.	1. The drive belt is worn, loose or broken. 2. The drive belt is off of the pulley. 3. The mower belt is worn, loose, or broken.	1. Install a new drive belt. 2. Install the drive belt and check the adjusting shafts and belt guides for the correct position. 3. Install a new mower belt.

Schematics

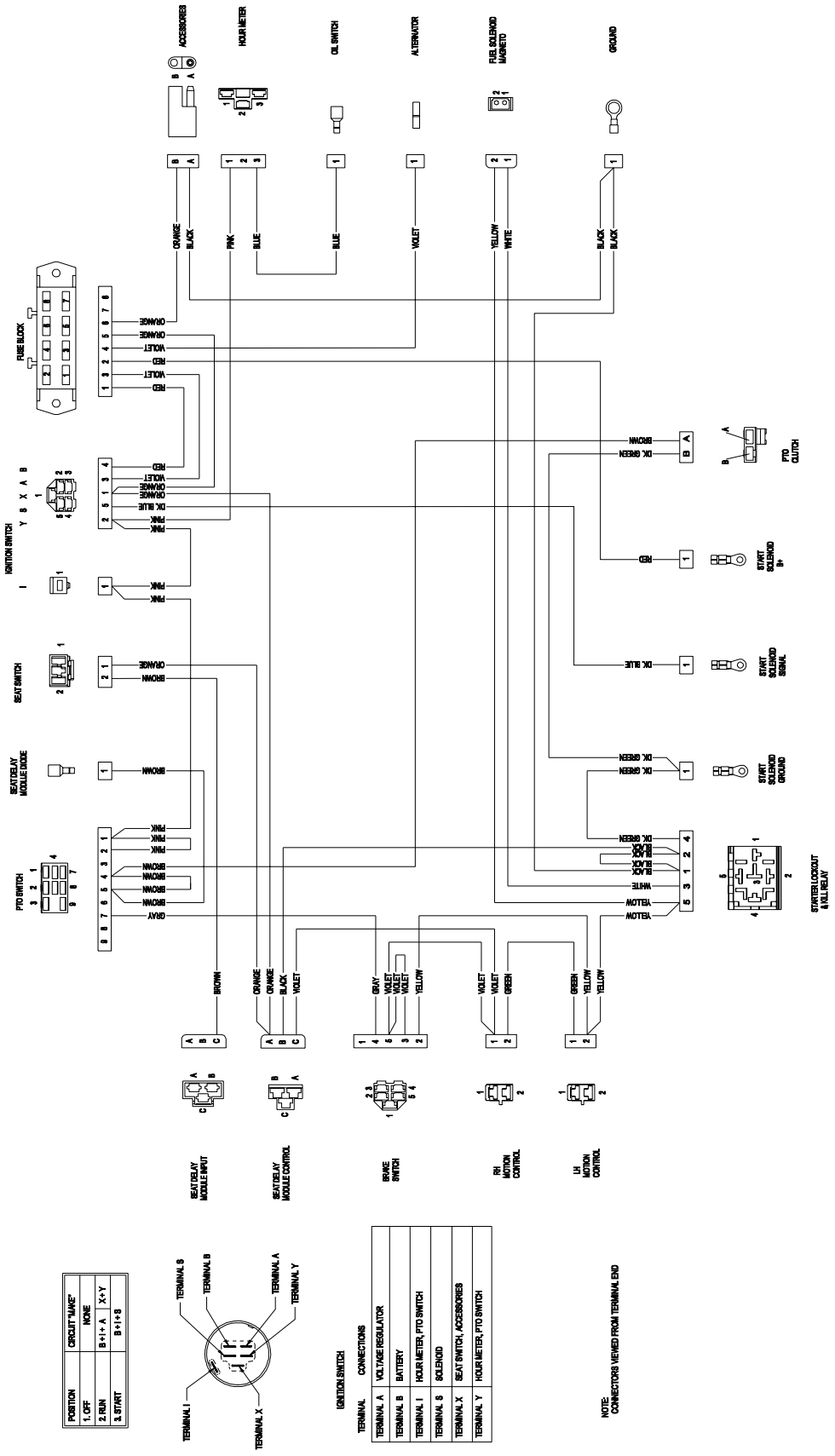

POSITION	CIRCUIT "MAKE"	
1. OFF	NONE	
2. RUN	B+/I+A	X+Y
3. START	B+/I+S	

IGNITION SWITCH

TERMINAL	CONNECTIONS
TERMINAL A	VOLTAGE REGULATOR
TERMINAL B	BATTERY
TERMINAL I	HOUR METER, PTO SWITCH
TERMINAL S	SOLENOID
TERMINAL X	SEAT SWITCH, ACCESSORIES
TERMINAL Y	HOUR METER, PTO SWITCH

Evaporative Emission Control Warranty Statement

California Evaporative Emission Control Warranty Statement
Your Warranty Rights and Obligations

Introduction

The California Air Resources Board and The Toro® Company are pleased to explain the evaporative emission control system's warranty on your 2007 model year equipment. In California, new equipment that use small off-road engines must be designed, built, and equipped to meet the State's stringent anti-smog standards. The Toro® Company must warrant the evaporative emission control system on your equipment for two years provided there has been no abuse, neglect or improper maintenance of your equipment.

Your evaporative emission control system may include parts such as: fuel lines, fuel line fittings, and clamps.

Manufacturer's Warranty Coverage:

This evaporative emission control system is warranted for two years. If any evaporative emission-related part on your equipment is defective, the part will be repaired or replaced by The Toro® Company.

Owner's Warranty Responsibilities:

- As the equipment owner, you are responsible for performance of the required maintenance listed in your Operator's Manual. The Toro® Company recommends that you retain all receipts covering maintenance on your equipment, but The Toro® Company cannot deny warranty solely for the lack of receipts.
- As the equipment owner, you should however be aware that The Toro® Company may deny you warranty coverage if your emission warranty parts have failed due to abuse, neglect, or improper maintenance or unapproved modifications.
- You are responsible for presenting your equipment to an Authorized Service Dealer as soon as the problem exists. The warranty repairs should be completed in a reasonable amount of time, not to exceed 30 days. If you have a question regarding your warranty coverage, you should contact The Toro® Company at 1-952–948–4027 or call us toll free at the number listed in your Toro Warranty statement.

Defects Warranty Requirements:

1. The warranty period begins on the date the engine or equipment is delivered to an ultimate purchaser.
2. General Evaporative Emissions Warranty Coverage. The emission warranty parts must be warranted to the ultimate purchaser and any subsequent owner that the evaporative emission control system when installed was:
   A. Designed, built, and equipped so as to conform with all applicable regulations; and
   B. Free from defects in materials and workmanship that causes the failure of a warranted part for a period of two years.
3. The warranty on evaporative emissions-related parts will be interpreted as follows:
   A. Any warranted part that is not scheduled for replacement as required maintenance in the written instructions must be warranted for the warranty period of two years. If any such part fails during the period of warranty coverage, it must be repaired or replaced by The Toro® Company. Any such part repaired or replaced under the warranty must be warranted for a time not less than the remaining warranty period.
   B. Any warranted part that is scheduled only for regular inspection in the written instructions must be warranted for the warranty period of two years. A statement in such written instructions to the effect of "repair or replace as necessary" will not reduce the period of warranty coverage. Any such part repaired or replaced under warranty must be warranted for a time not less than the remaining warranty period.
   C. Any warranted part that is scheduled for replacement as required maintenance in the written instructions must be warranted for the period of time prior to the first scheduled replacement point for that part. If the part fails prior to the first scheduled replacement, the part must be repaired or replaced by The Toro® Company. Any such part repaired or replaced under warranty must be warranted for a time not less than the remainder of the period prior to the first scheduled replacement point for the part.
   D. Repair or replacement of any warranted part under the warranty provisions of this article must be performed at no charge to the owner at an Authorized Service Dealer.
   E. Notwithstanding the provisions of subsection (D) above, warranty services or repairs must be provided at an Authorized Service Dealer.
   F. The owner must not be charged for diagnostic labor that leads to the determination that a warranted part is in fact defective, provided that such diagnostic work is performed at an Authorized Service Dealer.
   G. Throughout the evaporative emission control system's two year warranty period, The Toro® Company must maintain a supply of warranted parts sufficient to meet the expected demand for such parts.
   H. Manufacturer approved replacement parts must be used in the performance of any warranty maintenance or repairs and must be provided without charge to the owner. Such use will not reduce the warranty obligations of The Toro® Company.
   I. The use of any add-on or modified parts will be grounds for disallowing a warranty claim made in accordance with this article. The Toro® Company will not be liable under this Article to warrant failures of warranted parts caused by the use of an add-on or modified part.
   J. The Toro® Company shall provide any documents that describe the warranty procedures or policies within five working days of request by the Air Resources Board.

Emission Warranty Parts List:

The following lists includes the parts covered under this warranty:

- Fuel Lines
- Fuel Line Fittings
- Clamps

TITAN Z and TimeCutter Z Mowers

The Toro Total Coverage Guarantee

A Three-Year Limited Warranty (Limited Warranty for Commercial Use)

Conditions and Products Covered

The Toro Company and its affiliate, Toro Warranty Company, pursuant to an agreement between them, jointly promise to repair any Toro Product used for normal residential purposes* if defective in materials or workmanship. The following time periods apply from the date of purchase:

Products	Warranty Period
TITAN Z Mowers and Attachments	3 year limited warranty
TimeCutter Z Mowers and Attachments	3 year limited warranty
All Batteries	1 year limited warranty

This warranty includes the cost of parts and labor, but you must pay the cost of transportation to and from the servicing dealer.

This warranty applies to consumer TITAN Z and TimeCutter Z mowers and attachments.

* Normal residential purposes means use of the product on the same lot as your home. Use at more than one location is considered commercial use, and the commercial use warranty would apply.

Limited Warranty for Commercial Use

Toro Consumer Products and attachments used for commercial, institutional, or rental use are warranted against defects in materials or workmanship for the following time periods from the date of purchase:

Products	Warranty Period
Air Cooled Gas Engines	90 day limited warranty
All other items	30 day limited warranty

Instructions for Obtaining Warranty Service

If you think that your Toro Product contains a defect in materials or workmanship, follow this procedure:

1. Contact any Toro Authorized or Master Service Dealer to arrange service at their dealership. To locate a dealer convenient to you, refer to the Yellow Pages of your telephone directory (look under “Lawn Mowers") or access our web site at www.Toro.com. U.S. Customers may also call toll free: 866-854–9035 to use our 24-hour Toro dealer locator system.
2. Bring the product and your proof of purchase (sales receipt) to the Service Dealer.

If for any reason you are dissatisfied with the Service Dealer’s analysis or with the assistance provided, contact us at:

Customer Care Department, Consumer Division
Toro Warranty Company
8111 Lyndale Avenue South
Bloomington, MN 55420-1196
Toll Free: 866-216-6029 (U.S. customers)
Toll Free: 866-216-6030 (Canada customers)

Owner Responsibilities

You must maintain your Toro Product by following the maintenance procedures described in the *Operator’s Manual*. Such routine maintenance, whether performed by a dealer or by you, is at your expense.

Items and Conditions Not Covered

There is no other express warranty except for special emission system coverage on some products. This express warranty does not cover:

- Cost of regular maintenance service or parts, such as filters, fuel, lubricants, tune-up parts, blade sharpening, brake and clutch adjustments.
- Any product or part which has been altered or misused or required replacement or repair due to normal wear, accidents, or lack of proper maintenance.
- Repairs necessary due to improper fuel, contaminants in the fuel system, or failure to properly prepare the fuel system prior to any period of non-use over three months.
- Pickup and delivery charges to and from an Authorized Toro Service Dealer.

General Conditions

All repairs covered by this warranty must be performed by an Authorized Toro Service Dealer using Toro approved replacement parts.

Repair by an Authorized Toro Service Dealer is your sole remedy under this warranty.

Neither The Toro Company nor Toro Warranty Company is liable for indirect, incidental or consequential damages in connection with the use of the Toro Products covered by this warranty, including any cost or expense of providing substitute equipment or service during reasonable periods of malfunction or non-use pending completion of repairs under this warranty.

Some states do not allow exclusion of incidental or consequential damages, so the above exclusion and limitations may not apply to you.

This warranty gives you specific legal rights, and you may also have other rights which vary from state to state.

Countries Other than the United States or Canada

Customers who have purchased Toro products exported from the United States or Canada should contact their Toro Distributor (Dealer) to obtain guarantee policies for your country, province, or state. If for any reason you are dissatisfied with your Distributor’s service or have difficulty obtaining guarantee information, contact the Toro importer. If all other remedies fail, you may contact us at Toro Warranty Company.



© 2007 The Toro Company
8111 Lyndale Ave. South
Bloomington, MN 55420

Contact us at www.Toro.com.
All Rights Reserved
Printed in the USA.