Form No. 3357-131 Rev C

TORO®

Count on it.

Operator's Manual

Dingo® 323 Compact Utility Loader

Model No. 22318—Serial No. 270000001 and Up

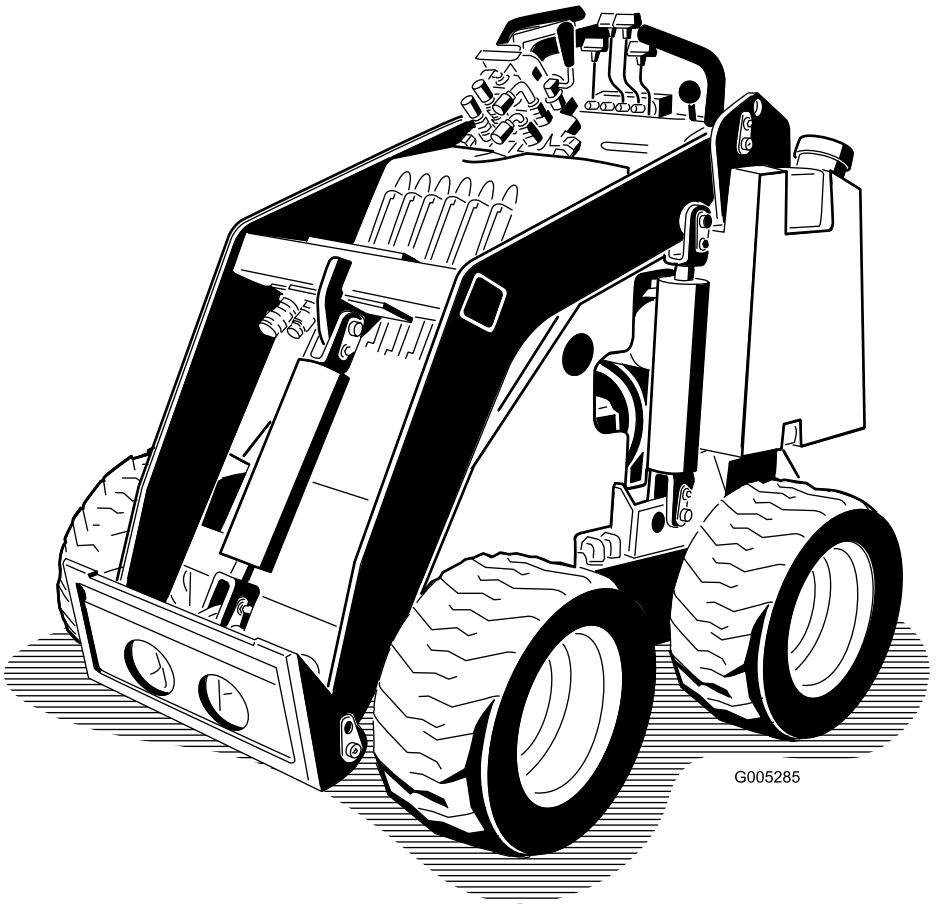

Register your product at www.Toro.com

Original Instructions (EN)

Warning

CALIFORNIA
Proposition 65 Warning

The engine exhaust from this product contains chemicals known to the State of California to cause cancer, birth defects, or other reproductive harm.

Because in some areas there are local, state, or federal regulations requiring that a spark arrester be used on the engine of this machine, a spark arrester is available as an option. If you require a spark arrestor, contact your Authorized Service Dealer.

Genuine Toro spark arresters are approved by the USDA Forestry Service.

Important: It is a violation of California Public Resource Code Section 4442 to use or operate the engine on any forest-covered, brush-covered, or grass-covered land without a spark arrester muffler maintained in working order, or the engine constricted, equipped, and maintained for the prevention of fire. Other states or federal areas may have similar laws.

This spark ignition system complies with Canadian ICES-002

The enclosed Engine Owner's Manual is supplied for information regarding the US Environmental Protection Agency (EPA) and the California Emission Control Regulation of emission systems, maintenance, and warranty. Replacements may be ordered through the engine manufacturer.

Introduction

Read this information carefully to learn how to operate and maintain your product properly and to avoid injury and product damage. You are responsible for operating the product properly and safely.

You may contact Toro directly at www.Toro.com for product and accessory information, help finding a dealer, or to register your product.

Whenever you need service, genuine Toro parts, or additional information, contact an Authorized Service Dealer or Toro Customer Service and have the model and serial numbers of your product ready. Figure 1 identifies the location of the model and serial numbers on the product. Write the numbers in the space provided.

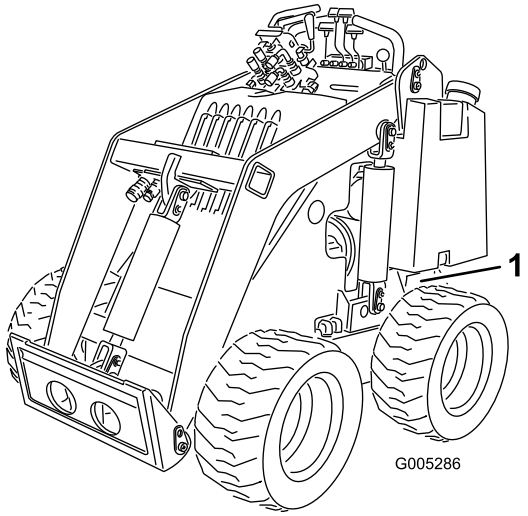

Figure 1

1. Model and serial number location

Model No. _____

Serial No. _____

This manual identifies potential hazards and has safety messages identified by the safety alert symbol (Figure 2), which signals a hazard that may cause serious injury or death if you do not follow the recommended precautions.



Figure 2

1. Safety alert symbol

This manual uses 2 other words to highlight information. **Important** calls attention to special mechanical information and **Note** emphasizes general information worthy of special attention.

© 2007—The Toro® Company
8111 Lyndale Avenue South
Bloomington, MN 55420

Contact us at www.Toro.com.
Printed in the USA.
All Rights Reserved

Contents

Introduction 2
Safety 4
Safe Operating Practices 4
Slope Chart 8
Safety and Instructional Decals 9
Setup 11
1 Installing the Valve Lever 11
2 Checking Fluid Levels and Drive Chain Tension 11
3 Charging the Battery 11
Product Overview 13
Controls 13
Specifications 15
Operation 17
Adding Fuel 17
Checking the Engine Oil Level 18
Removing Debris from the Traction Unit 18
Checking the Hydraulic Fluid Level 19
Checking the Tire Pressure 19
Starting and Stopping the Engine 19
Driving the Traction Unit 20
Stopping the Traction Unit 20
Moving a Non-functioning Traction Unit 20
Using the Cylinder Locks 21
Using Attachments 21
Securing the Traction Unit for Transport 23
Adjusting the Thigh Support 23
Maintenance 25
Recommended Maintenance Schedule(s) 25
Premaintenance Procedures 26
Removing/Installing the Hood 26
Lubrication 26
Greasing the Traction Unit 26
Engine Maintenance 27
Servicing the Air Cleaner 27
Servicing the Engine Oil 28
Servicing the Spark Plugs 29
Fuel System Maintenance 30
Changing the Fuel Filter 30
Draining the Fuel Tanks 30
Electrical System Maintenance 31
Replacing the Battery 31
Servicing the Battery 32
Hydraulic System Maintenance 33
Replacing the Hydraulic Filter 33
Changing the Hydraulic Fluid 34
Checking the Hydraulic Lines 34
Storage 35
Troubleshooting 36
Schematics 38

Safety

Improper use or maintenance by the operator or owner can result in injury. To reduce the potential for injury, comply with these safety instructions and always pay attention to the safety alert symbol ⚠, which means: Caution, Warning, or Danger—personal safety instruction. Failure to comply with the instruction may result in personal injury or death.

Safe Operating Practices

This product is capable of amputating hands and feet. Always follow all safety instructions to avoid serious injury or death.

⚠

Engine exhaust contains carbon monoxide, an odorless, deadly poison that can kill you.

Do not run the engine indoors or in an enclosed area.

Training

- Read the *Operator's Manual* and other training material. If the operator(s) or mechanic(s) can not read English, it is the owner's responsibility to explain this material to them.
- Become familiar with the safe operation of the equipment, operator controls, and safety signs.
- All operators and mechanics should be trained. The owner is responsible for training the users.
- Never let children or untrained people operate or service the equipment. Local regulations may restrict the age of the operator.
- The owner/user can prevent and is responsible for accidents or injuries occurring to himself or herself, other people or property.

Preparation

- Evaluate the terrain to determine what accessories and attachments are needed to properly and safely perform the job. Only use accessories and attachments approved by the manufacturer.
- Wear appropriate clothing including hard hat, safety glasses, long pants, safety shoes, and hearing protection. Long hair, loose clothing or jewelry may get tangled in moving parts.
- Inspect the area where the equipment is to be used and remove all objects such as rocks, toys, and wire which can be thrown by the machine.
- Use extra care when handling gasoline and other fuels. They are flammable and vapors are explosive.
  - Use only an approved container
  - Never remove the gas cap or add fuel with the engine running. Allow the engine to cool before refueling. Do not smoke.
  - Never refuel or drain the machine indoors.
- Check that the operator's presence controls, safety switches, and shields are attached and functioning properly. Do not operate unless they are functioning properly.

Operation

- Never run an engine in an enclosed area.
- Only operate in good light, keeping away from holes and hidden hazards.
- Be sure all drives are in neutral before starting the engine. Only start the engine from the operator's position.
- Slow down and use extra care on hillsides. Be sure to travel in the recommended direction on hillsides. Turf conditions can affect the machine's stability.
- Slow down and use caution when making turns and when changing directions on slopes.
- Never operate with the guards not securely in place. Be sure all interlocks are attached, adjusted properly, and functioning property.
- Do not change the engine governor setting or overspeed the engine.
- Stop on level ground, lower implements, disengage the auxiliary hydraulics, and shut off the engine before leaving the operator's position for any reason.
- Keep hands and feet away from moving attachments.
- Look behind and down before backing up to be sure of a clear path.
- Never carry passengers and keep pets and bystanders away.

- Slow down and use caution when making turns and crossing roads and sidewalks.
- Do not operate the machine under the influence of alcohol or drugs.
- Use care when loading or unloading the machine into a trailer or truck.
- Use care when approaching blind corners, shrubs, trees, or other objects that may obscure vision.
- Read all attachment manuals.
- Ensure that the area is clear of other people before operating the traction unit. Stop the traction unit if anyone enters the area.
- Never leave a running traction unit unattended. Always lower the loader arms, stop the engine, and remove the key before leaving.
- Do not exceed the rated operating capacity, as the traction unit may become unstable which may result in loss of control.
- Do not carry a load with the arms raised. Always carry loads close to the ground.
- Do not over-load the attachment and always keep the load level when raising the loader arms. Logs, boards, and other items could roll down the loader arms, injuring you.
- Never jerk the controls; use a steady motion.
- Watch for traffic when operating near or crossing roadways.
- Do not touch parts which may be hot from operation. Allow them to cool before attempting to maintain, adjust, or service.
- Check for overhead clearances (i.e. branches, doorways, electrical wires) before driving under any objects and do not contact them.
- Ensure that you operate the traction unit in areas where there are no obstacles in close proximity to the operator. Failure to maintain adequate distance from trees, walls, and other barriers may result in injury as the traction unit backs up during operation if the operator is not attentive to the surroundings. Only operate the unit in areas where there is sufficient clearance for the operator to safely maneuver the product.
- Before digging, have the area marked for underground utilities, and do not dig in marked areas.
- Locate the pinch point areas marked on the traction unit and attachments and keep hands and feet away from these areas.
- Before operating the traction unit with an attachment, ensure that the attachment is properly installed.
- Do not place your feet under the platform.

Slope Operation

Slopes are a major factor related to loss-of-control and tip-over accidents, which can result in severe injury or death. All slopes require extra caution.

- Do not operate the traction unit on hillsides or slopes exceeding the angles recommended in the Stability Data section in Specifications, page 15, and those in the attachment *Operator's Manual.* See also the Slope Chart, page 8.
- **Operate up and down slopes with the heavy end of the traction unit uphill.** Weight distribution changes. An empty bucket will make the rear of the traction unit the heavy end, and a full bucket will make the front of the traction unit the heavy end. Most other attachments will make the front of traction unit the heavy end.
- Raising the loader arms on a slope will affect the stability of the machine. Whenever possible, keep the loader arms in the lowered position when on slopes.
- Removing an attachment on a slope will make the rear of the traction unit heavy. Refer to the Stability Data section in Specifications, page 15, to determine whether the attachment can be safely removed on the slope.
- Remove obstacles such as rocks, tree limbs, etc. from the work area. Watch for holes, ruts, or bumps, as uneven terrain could overturn the traction unit. Tall grass can hide obstacles.
- Use only Toro-approved attachments. Attachments can change the stability and the operating characteristics of the traction unit. Warranty may be voided if used with unapproved attachments.
- Keep all movements on slopes slow and gradual. Do not make sudden changes in speed or direction.
- Avoid starting or stopping on a slope. If the traction unit loses traction, proceed slowly, straight down the slope.

- Avoid turning on slopes. If you must turn, turn slowly and keep the heavy end of the traction unit uphill.
- Do not operate near drop-offs, ditches, or embankments. The traction unit could suddenly turn over if a wheel goes over the edge of a cliff or ditch, or if an edge caves in.
- Do not operate on wet grass. Reduced traction could cause sliding.
- Do not park the traction unit on a hillside or slope without lowering the attachment to the ground and chocking the wheels.
- Do not try to stabilize the traction unit by putting your foot on the ground.

Maintenance and Storage

- Disengage the auxiliary hydraulics, lower the attachment, stop the engine, and remove the key. Wait for all movement to stop before adjusting, cleaning, or repairing.
- Clean debris from attachments, drives, mufflers, and engine to help prevent fires. Clean up oil or fuel spillage.
- Let the engine cool before storing and do not store near flame.
- Do not store fuel near flames or drain indoors.
- Park the machine on level ground. Never allow untrained personnel to service the machine.
- Use jack stands to support components when required.
- Carefully release pressure from components with stored energy.
- Disconnect the battery or remove the spark plug wires before making any repairs. Disconnect the negative terminal first and the positive last. Reconnect positive first and negative last.
- Keep hands and feet away from moving parts. If possible, do not make adjustments with the engine running.
- Charge batteries in an open well ventilated area, away from spark and flames. Unplug the charger before connecting or disconnecting it from the battery. Wear protective clothing and use insulated tools.
- Keep all parts in good working condition and all hardware tightened. Replace all worn or damaged decals.
- If any maintenance or repair requires the loader arms to be in the raised position, secure the arms in the raised position with the hydraulic cylinder lock.
- Keep nuts and bolts tight. Keep equipment in good condition.
- Never tamper with safety devices.
- Keep the traction unit free of grass, leaves, or other debris build-up. Clean up oil or fuel spillage. Allow the traction unit to cool before storing.
- Use extra care when handling gasoline and other fuels. They are flammable and vapors are explosive.
  - Use only an approved container.
  - Never remove the gas cap or add fuel when the engine is running. Allow the engine to cool before refueling. Do not smoke.
  - Never refuel the traction unit indoors.
  - Never store the traction unit or fuel container inside where there is an open flame, such as near a water heater or furnace.
  - Never fill a container while it is inside a vehicle, trunk, pick-up bed, or any surface other than the ground.
  - Keep container nozzle in contact with the tank during filling.
- Stop and inspect the equipment if you strike an object. Make any necessary repairs before restarting.
- Use only genuine Toro replacement parts to ensure that original standards are maintained.

- Battery acid is poisonous and can cause burns. Avoid contact with skin, eyes, and clothing. Protect your face, eyes, and clothing when working with a battery.
- Battery gases can explode. Keep cigarettes, sparks and flames away from the battery.
- Keep your body and hands away from pin hole leaks or nozzles that eject high pressure hydraulic fluid. Use cardboard or paper to find hydraulic leaks; never use your hands. Hydraulic fluid escaping under pressure can penetrate skin and cause injury requiring surgery within a few hours by a qualified surgeon or gangrene may result.

Slope Chart

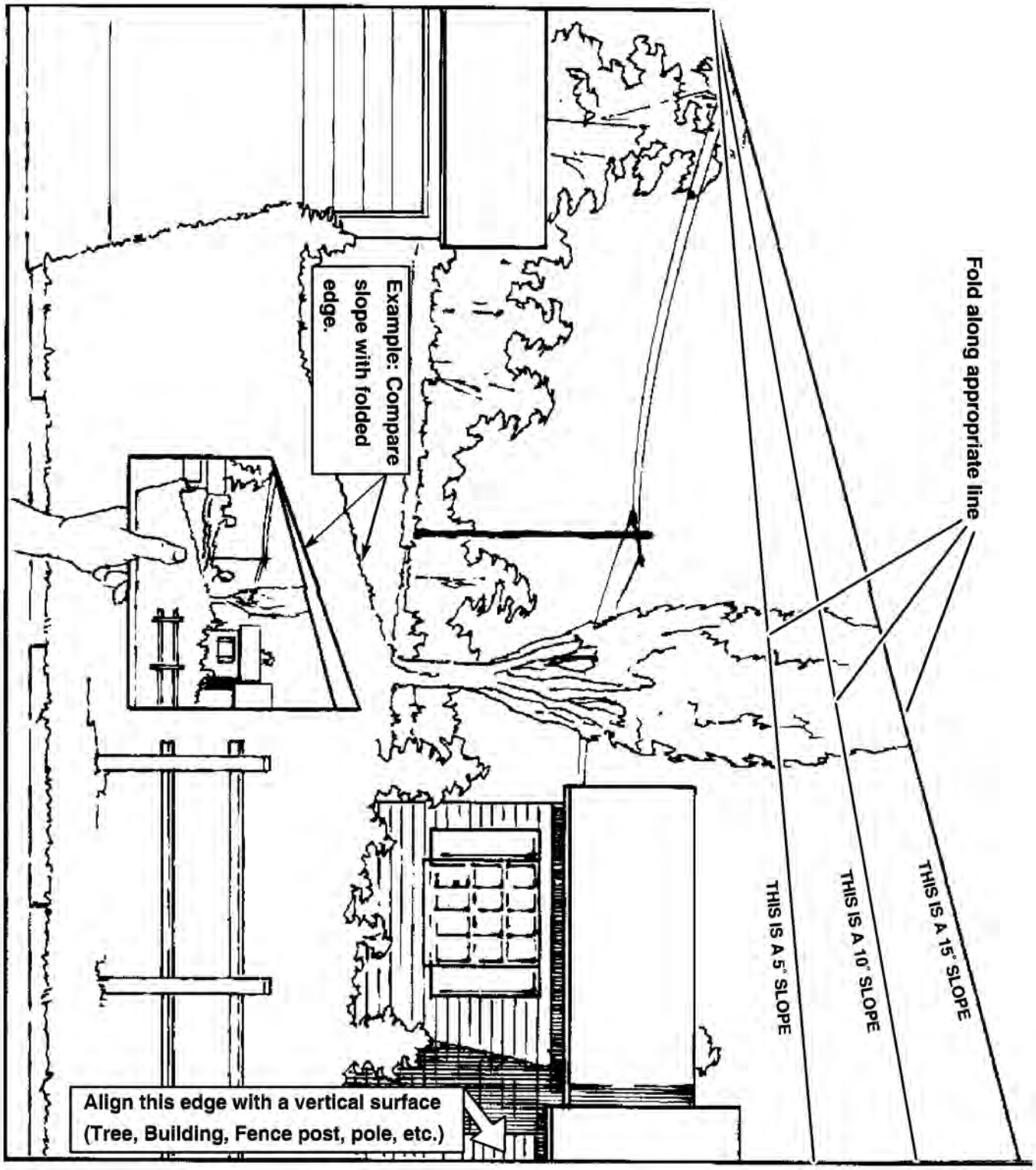
Fold along appropriate line
THIS IS A 15° SLOPE
THIS IS A 10° SLOPE
THIS IS A 5° SLOPE
Example: Compare slope with folded edge.
Align this edge with a vertical surface
(Tree, Building, Fence post, pole, etc.)

Safety and Instructional Decals

Safety decals and instructions are easily visible to the operator and are located near any area of potential danger. Replace any decal that is damaged or lost.



98-9051

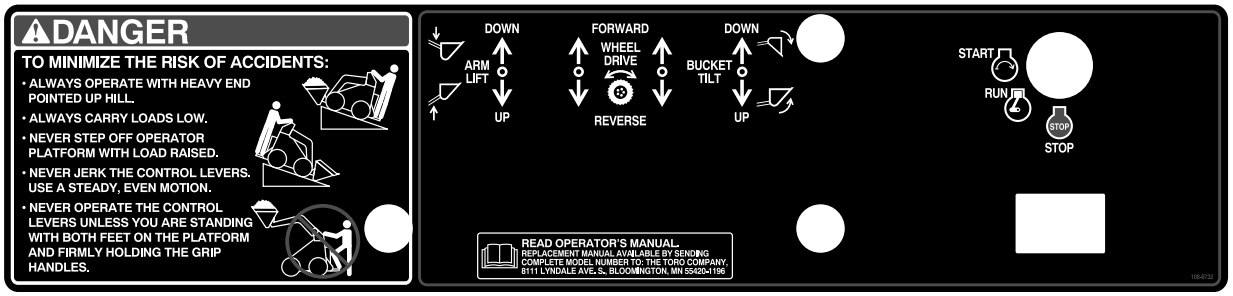

108-9732



98-4682



100-6141



105-8432

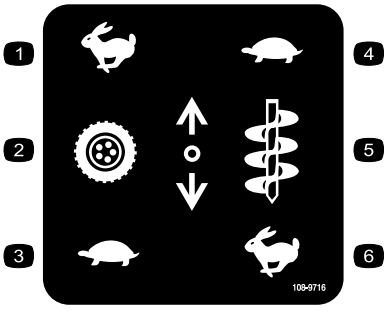

108-9716

1. Fast
2. Traction drive
3. Slow
4. Slow
5. Attachment speed
6. Fast

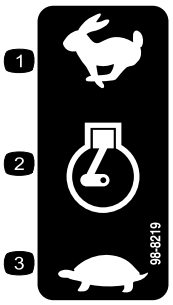

98-8219

1. Fast
2. Throttle
3. Slow

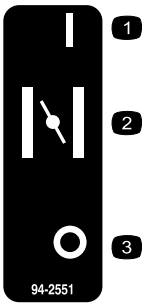

94-2551

1. On
2. Choke
3. Off

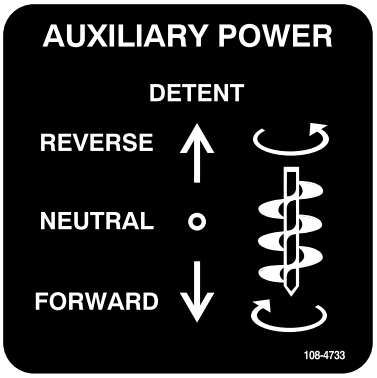

108-4733



Battery Symbols

Some or all of these symbols are on your battery

1. Explosion hazard
2. No fire, open flame, or smoking.
3. Caustic liquid/chemical burn hazard
4. Wear eye protection
5. Read the *Operator's Manual.*
6. Keep bystanders a safe distance from the battery.
7. Wear eye protection; explosive gases can cause blindness and other injuries
8. Battery acid can cause blindness or severe burns.
9. Flush eyes immediately with water and get medical help fast.
10. Contains lead; do not discard.

Setup

Step 1

Installing the Valve Lever

Parts needed for this step:

1	Speed selector valve lever

Procedure

1. Remove and discard the nut securing the bolt and lock washer to the speed selector lever.
2. Secure the lever to the speed selector valve using the bolt and lock washer as illustrated in Figure 3.

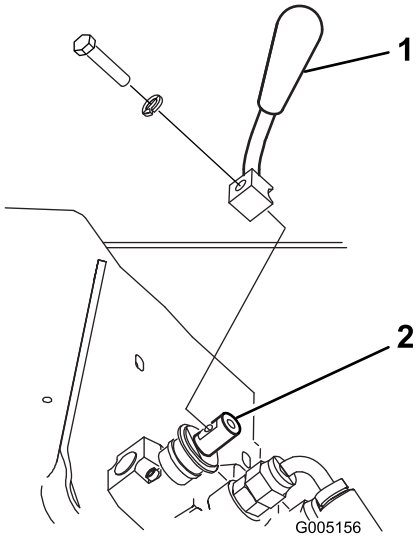

Figure 3

1. Speed selector valve lever 2. Speed selector valve

Step 2

Checking Fluid Levels and Drive Chain Tension

No Parts Required

Procedure

Before starting the engine for the first time, check the engine oil and hydraulic fluid levels and the traction drive chain tension. Refer to Operation and Maintenance for more information.

Step 3

Charging the Battery

No Parts Required

Procedure

Warning

CALIFORNIA
Proposition 65 Warning

Battery posts, terminals, and related accessories contain lead and lead compounds, chemicals known to the State of California to cause cancer and reproductive harm. Wash hands after handling.

Battery terminals or metal tools could short against metal components, causing sparks. Sparks can cause the battery gasses to explode, resulting in personal injury.

- **When removing or installing the battery, do not allow the battery terminals to touch any metal parts of the traction unit.**
- **Do not allow metal tools to short between the battery terminals and metal parts of the traction unit.**

1. Park the traction unit on a level surface, raise the loader arms, and install the cylinder locks.
2. Stop the engine and remove the key.
3. Connect a charger to the battery (Figure 4) and charge it for a minimum of 1 hour at 6 to 10 amps. Do not overcharge the battery.

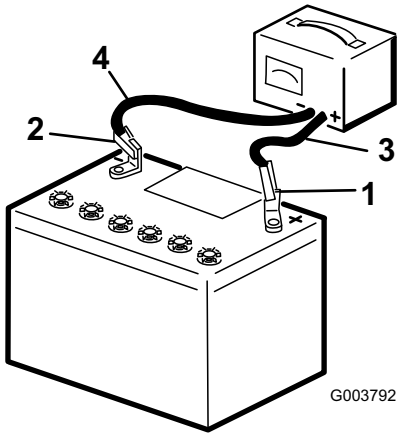

Figure 4

1. Positive post
2. Negative post
3. Charger red (+) wire
4. Charger black (—) wire

Charging the battery produces gasses that can explode.

Never smoke near the battery and keep sparks and flames away from battery.

4. When the battery is fully charged, unplug the charger from the electrical outlet, then disconnect the charger leads from the battery posts (Figure 4).

Product Overview

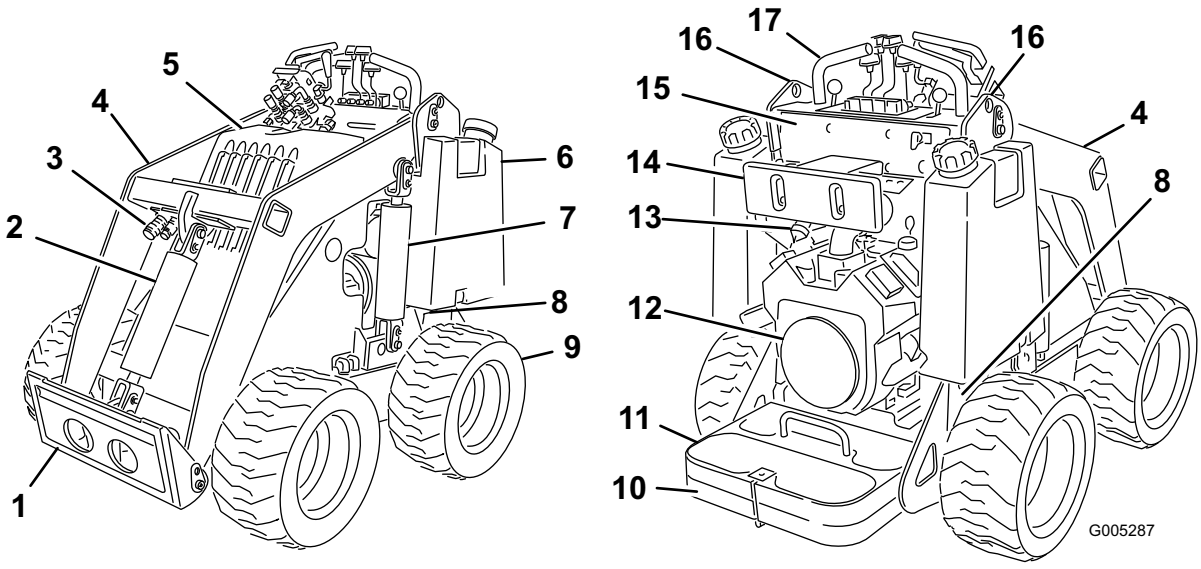

Figure 5

1. Mount plate
2. Tilt cylinder
3. Auxiliary hydraulic couplers
4. Loader arms
5. Hood
6. Fuel tank
7. Lift cylinder
8. Tow valve
9. Wheel
10. Operator platform
11. Counterweight
12. Engine
13. Air cleaner
14. Thigh support
15. Control panel
16. Lift points
17. Handles

Controls

Become familiar with all the controls (Figure 6) before you start the engine and operate the traction unit.

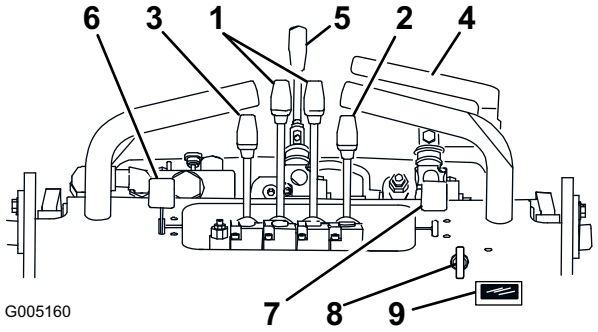

Figure 6

1. Traction control levers
2. Attachment tilt lever
3. Loader arm lever
4. Auxiliary hydraulics lever
5. Speed selector lever
6. Throttle lever
7. Choke lever
8. Key switch
9. Hour meter/tachometer

Key Switch

The key switch, used to start and stop the engine, has three positions: off, run, and start.

To start the engine, rotate the key to the start position. Release the key when engine starts and it will move automatically to the run position.

To stop the engine, rotate the key to the off position.

Throttle Lever

Move the control forward to increase the engine speed and rearward to decrease speed.

Choke Lever

Before starting a cold engine, move the choke lever forward. After the engine starts, regulate the choke to keep the engine running smoothly. As soon as possible, move the choke lever all the way rearward.

Note: A warm engine requires little or no choking.

Traction Control Levers

- **To move forward**, move the traction control levers forward. To move rearward, move the traction control levers rearward.

- **To go straight**, move both traction control levers equally.
- **To turn**, move the lever located on the side you want to turn back toward the neutral position while keeping the other lever engaged.

  Note: The farther you move the traction control levers in either direction, the faster the traction unit will move in that direction.
- **To slow or stop**, move the traction control levers to neutral.

Attachment Tilt Lever

To tilt the attachment forward, slowly push the attachment tilt lever forward.

To tilt the attachment rearward, slowly pull the attachment tilt lever rearward.

Loader Arm Lever

To lower the loader arms, slowly push the loader arm lever forward.

To raise the loader arms, slowly pull the loader arm lever rearward.

Auxiliary Hydraulics Lever

To operate a hydraulic attachment in forward direction, slowly pull the auxiliary hydraulics lever upward and then rearward.

To operate a hydraulic attachment in reverse direction, slowly pull the auxiliary hydraulics lever upward and then push it forward. This is also called the detent position because it does not require operator presence.

Speed Selector Lever

Move the speed selector lever to the forward position to set the traction drive, loader arms, and attachment tilt to high speed and the auxiliary hydraulics to low speed.

Move the speed selector lever to the rearward position to set the auxiliary hydraulics to high speed and the traction drive, loader arms, and attachment tilt to low speed.



If you move the speed selector lever while the traction unit is in motion, the traction unit will either stop suddenly or accelerate quickly. If you operate the traction unit with the speed selector lever in an intermediate position, the traction unit will operate erratically and may be damaged. You could lose control of the traction unit and injure bystanders or yourself.

- **Do not move the speed selector lever when the traction unit is in motion.**
- **Do not operate the traction unit when the speed selector is in any intermediate position (i.e., any position other than fully forward or fully rearward).**

Hour Meter/Tachometer

When the engine is off, the hour meter/tachometer displays the number of hours of operation that have been logged on the traction unit. When the engine is running, it displays the speed of the engine in revolutions per minute (rpm).

After 50 hours and then every 100 hours thereafter (that is at 150, 250, 350, etc.) the screen displays CHG OIL to remind you to change the oil. After every 100 hours, the screen displays SVC to remind you to perform the other maintenance procedures based on a 100, 200, or 400 hour schedule. These reminders come on starting three hours prior to the service interval time and flash at regular intervals for six hours.

Specifications

Note: Specifications and design are subject to change without notice.

Width	40.5 inches (103 cm)
Length	60 inches (152 cm)
Height	49 inches (125 cm)
Weight (without attachment or counterweight)	1567 lb (711 Kg)
Weight of the counterweight	180 lb (81.6 Kg)
Operating capacity (with 200 lb operator, the standard bucket, and without the counterweight)	515 lb (234 Kg)
Tipping capacity (with 200 lb operator, the standard bucket, and without the counterweight)	1030 lb (467 Kg)
Wheelbase	28 inches (71 cm)
Dump height (with standard bucket)	47 inches (120 cm)
Reach—fully raised (with standard bucket)	26 inches (66 cm)
Height to hinge pin (narrow bucket in standard position)	66 inches (168 cm)

Attachments/Accessories

A selection of Toro approved attachments and accessories are available for use with the machine to enhance and expand its capabilities. Contact your Authorized Service Dealer or Distributor or go to www.Toro.com for a list of all approved attachments and accessories.

Important: Use only Toro approved attachments. Other attachments may create an unsafe operating environment or damage the traction unit.

Stability Data

The following tables list the maximum slope recommended for the traction unit in the positions listed in the tables. Slopes over the listed degree may cause the traction unit to become unstable. The data in the tables assume that the loader arms are fully lowered; raised arms may affect the stability.

In each attachment manual is a set of three stability ratings, one for each hill position. To determine the maximum slope you can traverse with the attachment installed, find the degree of slope that corresponds to the stability ratings of the attachment. Example: If the attachment has a Front Uphill rating of B, a Rear Uphill rating of D, and a Side Uphill rating of C, then you could drive forward up an 20° slope, rearward up a 10° slope, or sideways on a 13° slope, as listed in the following table.

Configuration	Maximum Recommended Slope when Operating with: Front Uphill 	Rear Uphill 	Side Uphill 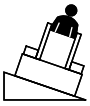
Traction unit without attachment	10°	20°	18°
Traction unit with counterweight, without attachment	8°	20°	19°
Traction unit with an attachment rated with one of the following stability ratings for each slope position:*			
A	25°	25°	20°
B	20°	20°	17°
C	15°	15°	13°
D	10°	10°	9°
E	5°	5°	5°

Operation

Note: Determine the left and right sides of the machine from the normal operating position.

Important: Before operating, check the fuel and oil level, remove debris from the traction unit, and check the tire pressure. Also, ensure that the area is clear of people and debris. You should also know and have marked the locations of all utility lines.

You could fall off of the platform and be seriously injured during operation.

Do not move the control levers unless you are standing with both feet on the platform and your hands are holding the handles.

Adding Fuel

In certain conditions, gasoline is extremely flammable and highly explosive. A fire or explosion from gasoline can burn you and others and can damage property.

- **Fill the fuel tanks outdoors, in an open area, when the engine is cold. Wipe up any gasoline that spills.**
- **Never fill the fuel tanks inside an enclosed trailer.**
- **Do not fill the fuel tanks completely full. Add gasoline to the fuel tank until the level is 1/4 to 1/2 inch (6 to 13 mm) below the bottom of the filler neck. This empty space in the tank allows gasoline to expand.**
- **Never smoke when handling gasoline, and stay away from an open flame or where gasoline fumes may be ignited by a spark.**
- **Store gasoline in an approved container and keep it out of the reach of children. Never buy more than a 30-day supply of gasoline.**
- **Do not operate without entire exhaust system in place and in proper working condition.**

In certain conditions during fueling, static electricity can be released causing a spark which can ignite the gasoline vapors. A fire or explosion from gasoline can burn you and others and can damage property.

- **Always place gasoline containers on the ground away from your vehicle before filling.**
- **Do not fill gasoline containers inside a vehicle or on a truck or trailer bed because interior carpets or plastic truck bed liners may insulate the container and slow the loss of any static charge.**
- **When practical, remove gas-powered equipment from the truck or trailer and refuel the equipment with its wheels on the ground.**
- **If this is not possible, then refuel such equipment on a truck or trailer from a portable container, rather than from a gasoline dispenser nozzle.**
- **If a gasoline dispenser nozzle must be used, keep the nozzle in contact with the rim of the fuel tank or container opening at all times until fueling is complete.**

Use unleaded gasoline (87 pump octane minimum). Leaded, regular gasoline may be used if unleaded is not available.

Important: Do not use methanol, gasoline containing methanol, or gasohol containing more than 10% ethanol because the fuel system could be damaged. Do not mix oil with gasoline.

Using Stabilizer/Conditioner

Use a fuel stabilizer/conditioner in the traction unit to provide the following benefits:

- Keeps gasoline fresh during storage of 90 days or less. For longer storage it is recommended that the fuel tank be drained.
- Cleans the engine while it runs
- Eliminates gum-like varnish buildup in the fuel system, which causes hard starting

Important: Do not use fuel additives containing methanol or ethanol.

Add the correct amount of gas stabilizer/conditioner to the gas.

Note: A fuel stabilizer/conditioner is most effective when mixed with fresh gasoline. To minimize the chance of varnish deposits in the fuel system, use fuel stabilizer at all times.

Filling the Fuel Tanks

1. Park the traction unit on a level surface, lower the loader arms, and stop the engine.
2. Remove the key and allow the engine to cool.
3. Clean around the fuel tank caps and remove them.
4. Add unleaded gasoline to the fuel tanks, until the level is 1/4 to 1/2 inch (6 to 13 mm) below the bottom of the filler necks.

   Important: This space in the tanks allows gasoline to expand. Do not fill the fuel tanks completely full.
5. Install the fuel tank caps securely.
6. Wipe up any gasoline that may have spilled.

Checking the Engine Oil Level

1. Park the traction unit on a level surface, lower the loader arms, and stop the engine.
2. Remove the key and allow the engine to cool.
3. Clean around the oil dipstick (Figure 7).

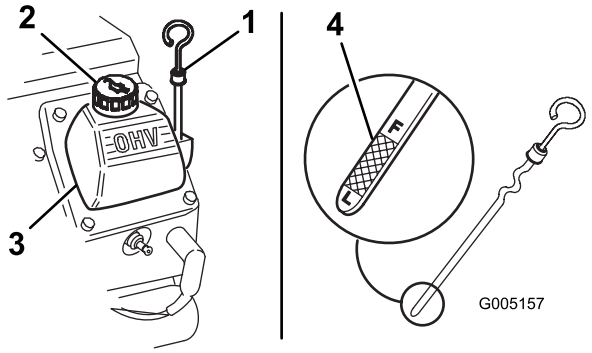

Figure 7

1. Oil dipstick
2. Filler cap
3. Valve cover
4. Metal end

4. Pull out the dipstick and wipe the metal end clean (Figure 7).
5. Slide the dipstick fully into the dipstick tube (Figure 7).
6. Pull the dipstick out and look at the metal end.
7. If the oil level is low, clean around the oil filler cap and remove the cap (Figure 7).
8. Slowly pour only enough oil into the valve cover to raise the level to the F (full) mark.

   Important: Do not overfill the crankcase with oil because the engine may be damaged.
9. Replace the filler cap and dipstick.

Removing Debris from the Traction Unit

Important: Operating the engine with a blocked grass screen, dirty or plugged cooling fins, and/or cooling shrouds removed, will result in engine damage from overheating.

1. Park the traction unit on a level surface, raise the loader arms, and install the cylinder locks.
2. Stop the engine and remove the key.
3. Clean any debris from the grill before each use and/or during use, if required.
4. Wipe away debris from the air cleaner before each use and/or during use, if required.
5. Clean any debris build-up on the engine with a brush or blower before each use.

Important: **It is preferable to blow dirt out, rather than washing it out. If water is used, keep it away from electrical items and hydraulic valves. Do not use a high-pressure washer. High-pressure washing can damage the electrical system and hydraulic valves or deplete grease.**

6. Remove and store the cylinder locks and lower the loader arms.

Checking the Hydraulic Fluid Level

Check the hydraulic fluid level before the engine is first started and after every 25 operating hours.

Hydraulic Tank Capacity: 17.25 US gallons (67 l)

Use 10W-30 or 15W-40 detergent, diesel engine oil (API service CH-4 or higher).

1. Remove the attachment, if one is installed.
2. Park the traction unit on a level surface, raise the loader arms, and install the cylinder locks.
3. Stop the engine, remove the key, and allow the engine to cool.
4. Clean the area around the filler neck of the hydraulic tank (Figure 8).
5. Remove the cap from the filler neck and check the fluid level on the dipstick (Figure 8).

   The fluid level should be between the marks on the dipstick.

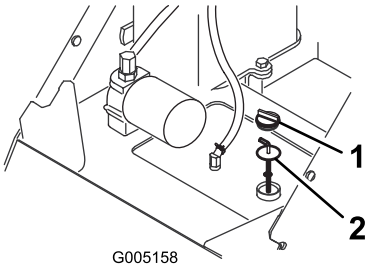

Figure 8

1. Filler neck cap
2. Dipstick

6. If the level is low, add enough fluid to raise it to the proper level.
7. Install the cap on the filler neck.
8. Remove and store the cylinder locks and lower the loader arms.

Checking the Tire Pressure

Maintain the air pressure in the tires as specified. Check the tires when they are cold to get the most accurate reading.

Pressure: 15-20 psi

Note: Use a lower tire pressure (15 psi) when operating in sandy soil conditions to provide better traction in the loose soil.

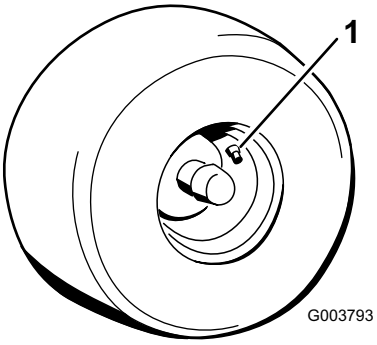

Figure 9

1. Valve stem

Starting and Stopping the Engine

Starting the Engine

1. Stand on the platform.
2. Ensure that the auxiliary hydraulics lever is in neutral.
3. Move the choke lever fully forward if you are starting a cold engine.

   Note: A warm or hot engine may not require choking.
4. Move the throttle lever midway between slow (turtle) and fast (rabbit) positions.
5. Turn the ignition key to the start position. When the engines starts, release the key.

   Important: **Do not engage the starter for more than 10 seconds at a time. If the engine fails to start, allow a 30 second cool-down period between attempts. Failure to follow these instructions can burn out the starter motor.**
6. After the engine starts, gradually move the choke rearward. If the engine stalls or hesitates,

move the choke forward again until the engine warms up.

7. Move the throttle lever to desired setting.

   Important: If you run the engine at high speeds when the hydraulic system is cold (i.e., when the ambient air temperature is near freezing or lower), hydraulic system damage could occur. When starting the engine in cold conditions, allow the engine to run in the middle throttle position for 2 to 5 minutes before moving the throttle to fast (rabbit).

   Note: If outdoor temperature is below freezing, store the traction unit in a garage to keep it warmer and aid in starting.

Stopping the Engine

1. Move the throttle lever to the slow (turtle) position.
2. Lower the loader arms to the ground.
3. Turn the ignition key off.

   Note: If the engine has been working hard or is hot, let it idle for a minute before turning the ignition key off. This helps cool the engine before it is stopped. In an emergency, the engine may be stopped immediately.

Driving the Traction Unit

The throttle control regulates the engine speed as measured in rpm (revolutions per minute). Place the throttle lever in the fast (rabbit) position for best performance.

Note: The throttle position can be utilized to operate at slower speeds.

To drive the traction unit, complete the following actions as necessary:

- To move forward, move the traction control levers forward.
- To move rearward, move the traction control levers rearward.
- To go straight, move both traction control levers equally.
- To turn, move the lever located on the side you want to turn toward the neutral position while keeping the other lever engaged.
- To slow or stop, move the traction control levers to neutral.

Note: The farther you move the traction control levers in either direction, the faster the traction unit will move in that direction.

Stopping the Traction Unit

To stop the traction unit, move the traction control levers to neutral, move the throttle lever to slow (turtle), lower loader arms to the ground, and stop the engine. **Remove the key.**

A child or untrained bystander could attempt to operate the traction unit and be injured.

Remove the key from the switch when leaving the traction unit, even if just for a few seconds.

Moving a Non-functioning Traction Unit

Important: Do not tow or pull the traction unit without first opening the tow valves, or the hydraulic system will be damaged.

1. Stop the engine.
2. Remove the plug covering each tow valve, located under each fuel tank (Figure 10).

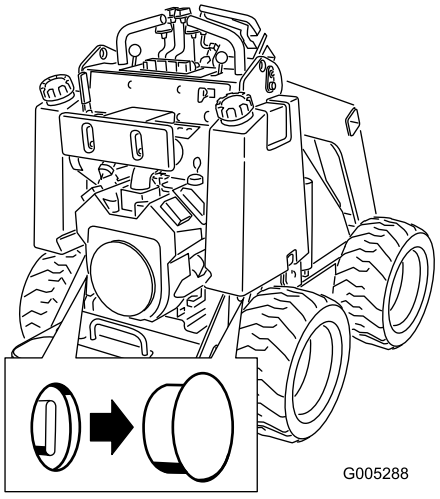

Figure 10

3. Loosen the jam nut on each tow valve.
4. Turn each valve counterclockwise one turn with a hex wrench to open them.
5. Tow the traction unit as required.

   Important: Do not exceed 3 mph when towing.
6. When you have repaired the traction unit, close the tow valves and tighten the jam nuts.

   Important: Do not over tighten the tow valves.
7. Replace the plugs.

Using the Cylinder Locks

The loader arms may lower when in the raised position crushing anyone under them.

Install the cylinder locks before performing maintenance that requires raised loader arms.

Installing the Cylinder Locks

1. Start the engine.
2. Raise the loader arms to the fully raised position.
3. Stop the engine.
4. Position a loader arm cylinder lock over each lift cylinder rod (Figure 11).
5. Secure each loader arm cylinder lock with a clevis pin and cotter pin (Figure 11).

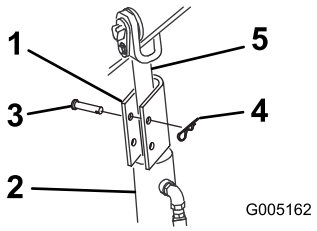

Figure 11

1. Cylinder lock
2. Lift cylinder
3. Hairpin cotter
4. Clevis pin
5. Lift cylinder rod

6. With the engine off, lower the loader arms.

Removing/Storing the Cylinder Lock

1. Start the engine.
2. Raise the loader arms to the fully raised position.
3. Stop the engine.
4. Remove the clevis pin and cotter pin securing each cylinder lock.
5. Remove the cylinder locks.
6. Lower the loader arms.
7. Install the cylinder locks over the hydraulic hoses and secure them with the clevis pins and cotter pins (Figure 12).

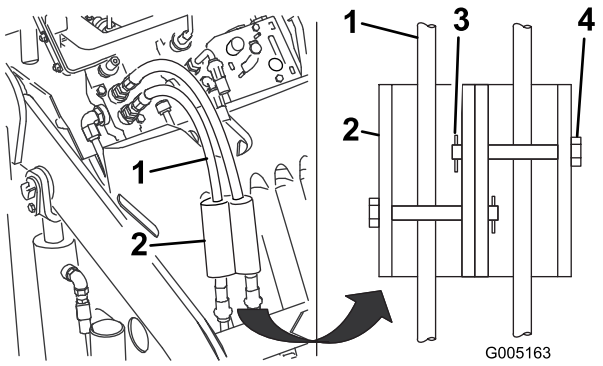

Figure 12

1. Hydraulic hoses
2. Cylinder locks
3. Hairpin cotter
4. Clevis pin

Using Attachments

Installing an Attachment

Important: Use only Toro-approved attachments. Attachments can change the stability and the operating characteristics of the traction unit. The warranty of the traction unit may be voided if used with unapproved attachments.

Important: Before installing the attachment, ensure that the mount plates are free of any dirt or debris and that the pins rotate freely. If the pins do not rotate freely, grease them.

1. Position the attachment on a level surface with enough space behind it to accommodate the traction unit.
2. Start the engine.
3. Tilt the attachment mount plate forward.

4. Position mount plate into the upper lip of the attachment receiver plate (Figure 13).

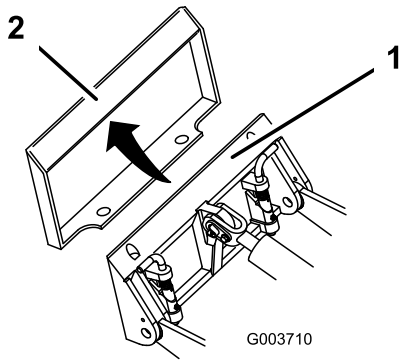

Figure 13

1. Mount plate
2. Receiver plate

5. Raise the loader arms while tilting back the mount plate at the same time.

   Important: The attachment should be raised enough to clear the ground, and the mount plate should be tilted all the way back.

6. Stop the engine.
7. Engage the quick attach pins, ensuring that they are fully seated in the mount plate (Figure 14).

   Important: If the pins do not rotate to the engaged position, the mount plate is not fully aligned with the holes in the attachment receiver plate. Check the receiver plate and clean it if necessary.

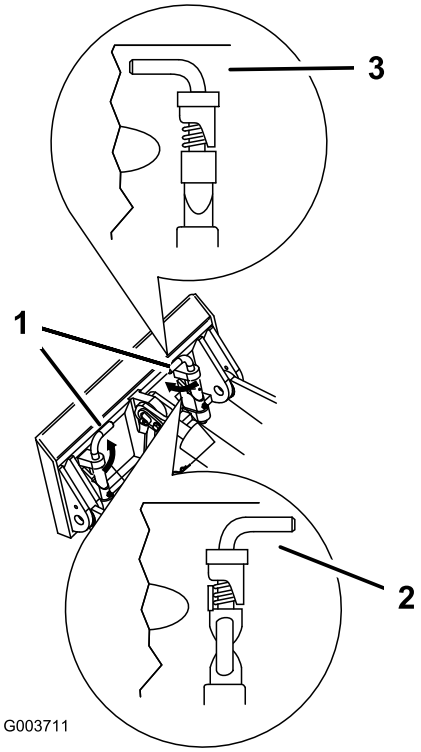

Figure 14

1. Quick attach pins (shown in engaged position)
2. Disengaged position
3. Engaged position

If you do not fully seat the quick attach pins through the attachment mount plate, the attachment could fall off of the traction unit, crushing you or bystanders.

Ensure that your quick attach pins are fully seated in the attachment mount plate.

Connecting the Hydraulic Hoses

If the attachment requires hydraulics for operation, connect the hydraulic hoses as follows:

1. Stop the engine.
2. Move the auxiliary hydraulics lever forward, backward, and back to neutral to relieve pressure at the hydraulic couplers.
3. Move the auxiliary hydraulics lever forward into the detent position.
4. Remove the protective covers from the hydraulic couplers on the traction unit.
5. Ensure that all foreign matter is cleaned from the hydraulic connectors.

6. Push the attachment male connector into the female connector on the traction unit.

   Note: When you connect the attachment male connector first, you will relieve any pressure built up in the attachment.

Hydraulic fluid escaping under pressure can penetrate skin and cause injury. Fluid injected into the skin must be surgically removed within a few hours by a doctor familiar with this form of injury or gangrene may result.

- **Keep your body and hands away from pin hole leaks or nozzles that eject high pressure hydraulic fluid.**
- **Use cardboard or paper to find hydraulic leaks, never use your hands.**

Hydraulic couplers, hydraulic lines/valves, and hydraulic fluid may be hot. If you contact hot components you may be burned.

- **Wear gloves when operating the hydraulic couplers.**
- **Allow the traction unit to cool before touching hydraulic components.**
- **Do not touch hydraulic fluid spills.**

7. Push the attachment female connector into the male connector on the traction unit.
8. Confirm that the connection is secure by pulling on the hoses.
9. Move the auxiliary hydraulics lever to neutral.

Removing an Attachment

1. Lower the attachment to the ground.
2. Stop the engine.
3. Disengage the quick attach pins by turning them to the outside.
4. If the attachment uses hydraulics, move the auxiliary hydraulics lever forward, backward, and back to neutral to relieve pressure at the hydraulic couplers.
5. If the attachment uses hydraulics, slide the collar back on the hydraulic couplers and disconnect them.

   Important: Connect the attachment hoses together to prevent hydraulic system contamination during storage.
6. Install the protective covers onto the hydraulic couplers on the traction unit.
7. Start the engine, tilt the mount plate forward, and back the traction unit away from the attachment.

Securing the Traction Unit for Transport

When transporting the traction unit on a trailer, always use the following procedure:

Important: Do not operate or drive the traction unit on roadways.

1. Lower the loader arms.
2. Stop the engine.
3. Secure the traction unit to the trailer with chains or straps using the tie-down/lift loops (Figure 5) to secure the rear of the traction unit and the loader arms/mount plate to secure the front of the traction unit.

Adjusting the Thigh Support

To adjust the thigh support (Figure 15), loosen the knobs and raise or lower the support pad to the desired height. You can also obtain additional adjustment by loosening the nut securing the pad to the adjustment plate, moving the plate up or down as needed. Tighten all fasteners securely when finished.

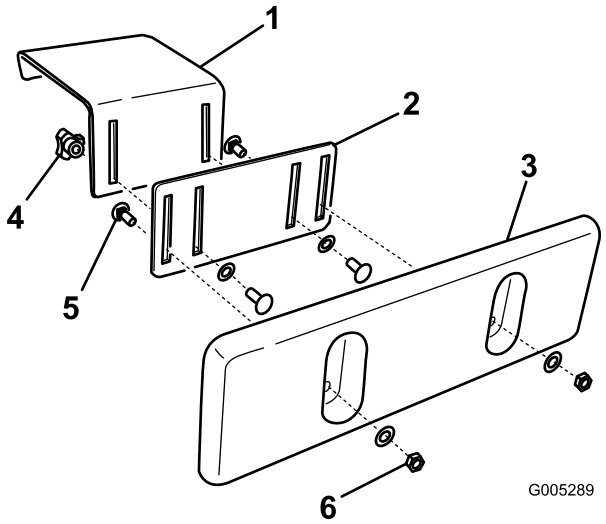

Figure 15

1. Thigh support bracket
2. Adjustment plate
3. Thigh support pad
4. Knob and flat washer
5. Carriage bolt
6. Locknut and flat washer

Maintenance

Note: Determine the left and right sides of the machine from the normal operating position.

Recommended Maintenance Schedule(s)

Maintenance Service Interval	Maintenance Procedure
After the first 8 operating hours	• Replace the hydraulic filter. • Torque the wheel lug nuts to 50 ft-lb (68 N·m).
After the first 50 operating hours	• Change the engine oil and filter.
Before each use or daily	• Check the engine oil level. • Remove debris from the traction unit. • Check the tire pressure. • Grease the traction unit. • Check for loose fasteners.
Every 25 hours	• Check the hydraulic fluid level. • Check the hydraulic lines for leaks, loose fittings, kinked lines, loose mounting supports, wear, weather, and chemical deterioration.
Every 100 hours	• Change the engine oil and filter (more frequently when operating conditions are extremely dusty or sandy). • Check the battery electrolyte level (replacement battery only). • Check the battery cable connections. • Torque the wheel lug nuts to 50 ft-lb (68 N·m).
Every 200 hours	• Replace the primary filter. • Check the spark plugs.
Every 400 hours	• Replace the hydraulic filter.
Every 1,500 hours	• Replace all moving hydraulic hoses.
Yearly	• Replace the safety (secondary) air filter. • Change the fuel filter. • Change the hydraulic fluid.
Yearly or before storage	• Touch up chipped paint

Important: **Refer to your Engine Operator's Manual for additional maintenance procedures.**

If you leave the key in the ignition switch, someone could accidently start the engine and seriously injure you or other bystanders.

Remove the key from the ignition and disconnect the wires from the spark plugs before you do any maintenance. Set the wires aside so that they do not accidentally contact the spark plugs.

Premaintenance Procedures

Removing/Installing the Hood

Removing the Hood

Before performing many maintenance procedures, you will need to remove the hood.

1. Raise the loader arms and install the cylinder locks.

   Note: In the case that you need to remove the hood without raising the loader arms, be very careful not to damage the hood or hydraulic hoses as you maneuver the hood out from under the arms.

2. Stop the engine and remove the key.
3. Release the four locking tabs (Figure 16, top, left tab illustrated).

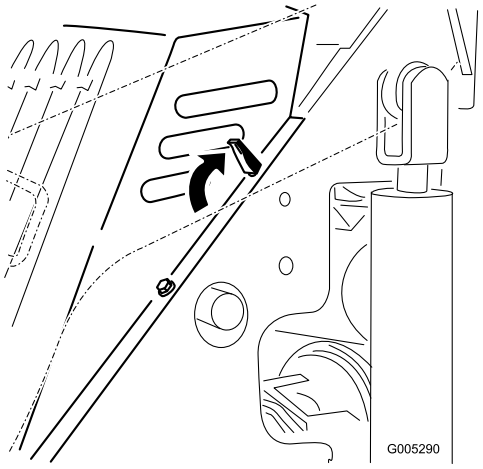

Figure 16

4. Pull the hood off of the traction unit.

Installing the Hood

1. Position the hood over the traction unit frame with the posts on the hood fitting into the holes in the frame (Figure 16).
2. Secure the hood by pushing the locking taps forward and down (Figure 16)

Lubrication

Greasing the Traction Unit

Grease all pivot joints every 8 operating hours and immediately after every washing.

Grease Type: General-purpose grease.

1. Lower the loader arms and stop the engine. Remove the key.
2. Clean the grease fittings with a rag.
3. Connect a grease gun to each fitting (Figure 17 and Figure 18).

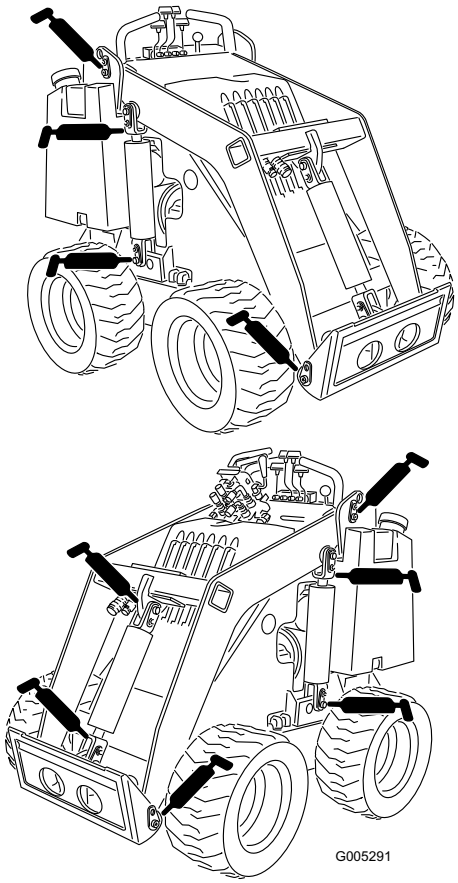

Figure 17

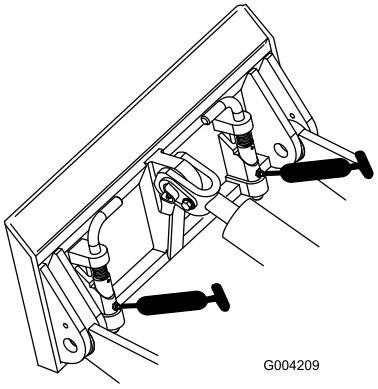

Figure 18

4. Pump grease into the fittings until grease begins to ooze out of the bearings (approximately 3 pumps).
5. Wipe up any excess grease.

Engine Maintenance

Servicing the Air Cleaner

Replace the primary filter every 200 operating hours. Replace the secondary filter yearly.

Note: Service the air cleaner more frequently if operating conditions are extremely dusty or sandy.

Important: Do not clean the filters. Cleaning them may damage them, allowing contaminants into the engine.

Removing the Filters

1. Lower the loader arms, stop the engine, and remove the key.
2. Release the latches on the air cleaner and pull the air cleaner cover off of the air cleaner body (Figure 19).

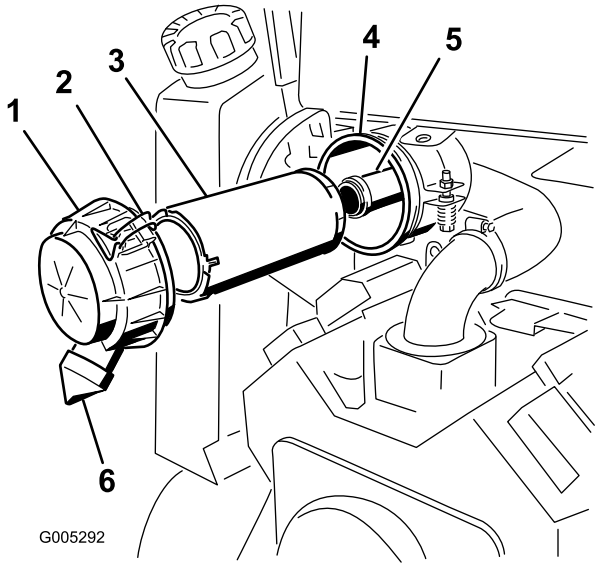

Figure 19

1. Air cleaner cover
2. Latches
3. Primary filter
4. Air cleaner body
5. Safety filter
6. Rubber outlet

3. Clean the inside of the air cleaner cover with compressed air.
4. Remove the rubber outlet on the cover and clean it and the port it covers thoroughly.
5. Replace the rubber outlet.
6. Gently slide the primary filter out of the air cleaner body and discard it (Figure 19). Avoid knocking the filter into the side of the body.
7. If you are also replacing the safety filter, gently slide it out of the air cleaner body and discard it (Figure 19).. Avoid knocking the filter into the side of the body.

Important: Never clean either filter element in any way. Cleaning it may damage it, allowing contaminants into the engine. Replace the elements if they are dirty or damaged.

Installing the Filters

1. Check each filter for shipping damage, especially to the sealing end ().

   Important: Do not use a damaged filter.
2. If you are replacing the safety filter, carefully slide it into the air cleaner body (Figure 19).. Ensure that it is fully seated by pushing firmly on the outer rim of the filter while installing it.
3. Carefully slide the primary filter into the air cleaner body (Figure 19).. Ensure that it is fully

seated by pushing firmly on the outer rim of the filter while installing it.

Important: Do not press on the soft inside area of the filter.

4. Install the cover, spacer and secure it with the cover nut (Figure 19). Torque the nut to 95 inch-lb (11 N·m).
5. Install the air cleaner cover with the rubber outlet pointing down in a 5:00 to 7:00 position (viewed from the end)(Figure 19) and secure it with the latches..

Servicing the Engine Oil

Change oil and filter after the first 50 operating hours and then every 100 operating hours thereafter.

Note: Change oil more frequently when operating conditions are extremely dusty or sandy.

Oil Type: Detergent oil (API service SG, SH, SJ, or higher)

Crankcase Capacity: w/filter, 2.1 qt. (2 l)

Viscosity: See table below

USE THESE SAE VISCOSITY OILS

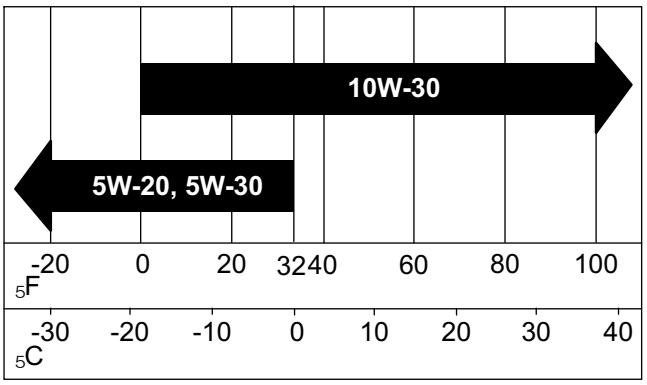

Figure 20

Changing the Oil and Filter

1. Start the engine and let it run for five minutes. This warms the oil so it drains better.
2. Park the traction unit so that the drain side is slightly lower than the opposite side to ensure that the oil drains completely.
3. Lower the loader arms, chock the wheels, stop the engine, and remove the key.

Components will be hot if the traction unit has been running. If you touch hot components you may be burned.

Allow the traction unit to cool before performing maintenance or touching components under the hood.

4. Place one end of a hose on the drain valve and the other end in a pan (Figure 21).

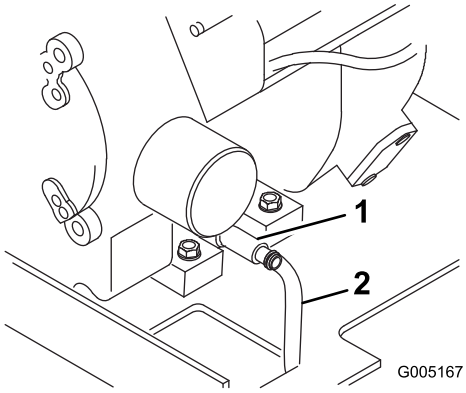

Figure 21

1. Oil drain valve

5. Open the drain valve by turning it counterclockwise, pulling out as you turn it (Figure 21).
6. When the oil has drained completely, close the drain valve and remove the hose.

   Note: Dispose of the used oil at a certified recycling center.
7. Remove the old filter and wipe the filter adapter (Figure 22) gasket surface.

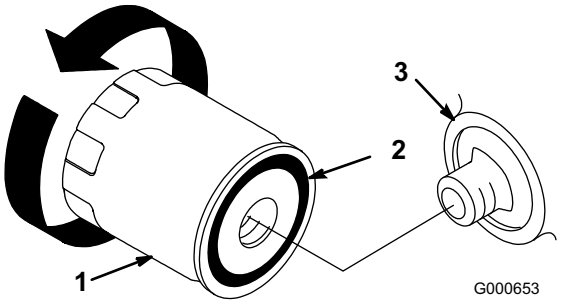

Figure 22

1. Oil filter
2. Gasket
3. Adapter

8. Pour new oil of the proper type in through the center hole of the filter. Stop pouring when the oil reaches the bottom of the threads.
9. Allow a minute or two for the oil to be absorbed by filter material, then pour off the excess oil.
10. Apply a thin coat of new oil to the rubber gasket on the replacement filter (Figure 22).
11. Install the replacement oil filter to the filter adapter. Turn the oil filter clockwise until the rubber gasket contacts the filter adapter, then tighten the filter an additional 1/2 turn (Figure 22).
12. Remove the oil fill cap and slowly pour approximately 80% of the specified amount of oil in through the valve cover.
13. Check the oil level; refer to Checking the Oil Level, Operation, page 17.
14. Slowly add additional oil to bring the level to the F (full) mark on the dipstick.
15. Replace the fill cap.

Servicing the Spark Plugs

Check the spark plugs after every 200 operating hours. Ensure that the air gap between the center and side electrodes is correct before installing each spark plug. Use a spark plug wrench for removing and installing the spark plugs and a gapping tool/feeler gauge to check and adjust the air gap. Install new spark plugs if necessary.

Type: Champion Premium Gold 2071, RC12YC, or equivalent. Air Gap: 0.030 inch (0.76 mm)

Removing the Spark Plugs

1. Lower the loader arms, stop the engine, and remove the key.
2. Pull the wires off of the spark plugs (Figure 23).

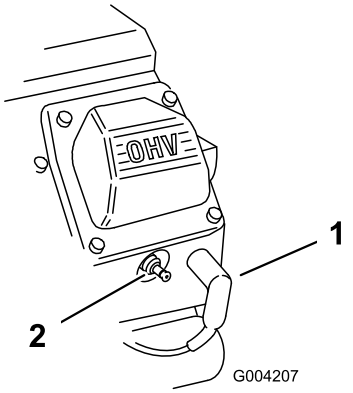

Figure 23

1. Spark plug wire
2. Spark plug

3. Clean around the spark plugs.
4. Remove both spark plugs and metal washers.

Checking the Spark Plugs

1. Look at the center of both spark plugs (Figure 24). If you see light brown or gray on the insulator, the engine is operating properly. A black coating on the insulator usually means the air cleaner is dirty.

   Important: Never clean the spark plugs. Always replace the spark plugs when they have a black coating, worn electrodes, an oily film, or cracks.

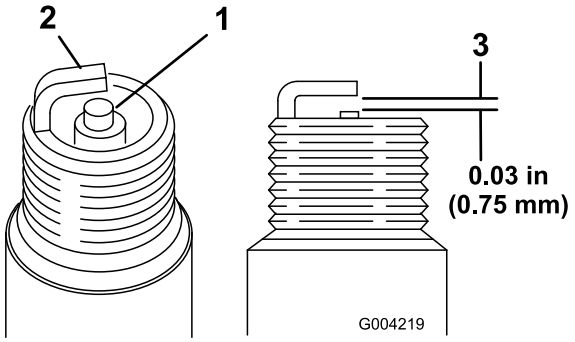

Figure 24

1. Center electrode insulator
2. Side electrode
3. Air gap (not to scale)

2. Check the gap between the center and side electrodes (Figure 24).
3. Bend the side electrode (Figure 24) if the gap is not correct.

Installing the Spark Plugs

1. Thread the spark plugs into the spark plug holes.

2. Tighten the spark plugs to 20 ft-lb (27 N·m).
3. Push the wires onto the spark plugs (Figure 23).

Fuel System Maintenance

Changing the Fuel Filter

Replace the fuel filter yearly.

Important: Never install a dirty filter.

1. Lower the loader arms, stop the engine, and remove the key.
2. Shut off the fuel valve on the bottom of each fuel tank (Figure 26).
3. Clamp the fuel line between the fuel tanks and the fuel filter to block the fuel flow.
4. Squeeze the ends of the hose clamps together and slide them away from the filter (Figure 25).

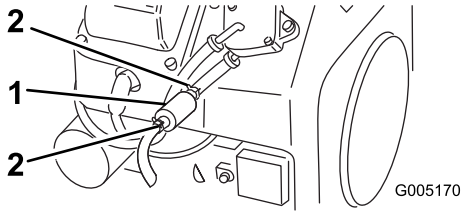

Figure 25

1. Filter
2. Hose clamp

5. Place a drain pan under the fuel lines to catch any leaks, then remove the filter from the fuel lines (Figure 25).
6. Install a new filter and move the hose clamps close to the filter.
7. Remove the clamp blocking fuel flow and open the fuel valve.

Draining the Fuel Tanks

In certain conditions, gasoline is extremely flammable and highly explosive. A fire or explosion from gasoline can burn you and others and can damage property.

- **Drain gasoline from the fuel tanks when the engine is cold. Do this outdoors in an open area. Wipe up any gasoline that spills.**
- **Never smoke when draining gasoline, and stay away from an open flame or where a spark may ignite the gasoline fumes.**

1. Park the traction unit on a level surface, to ensure that the fuel tanks drain completely.
2. Lower the loader arms, stop the engine, and remove the key.
3. Shut off the fuel valve in the hose near the bottom of the fuel tanks (Figure 26).

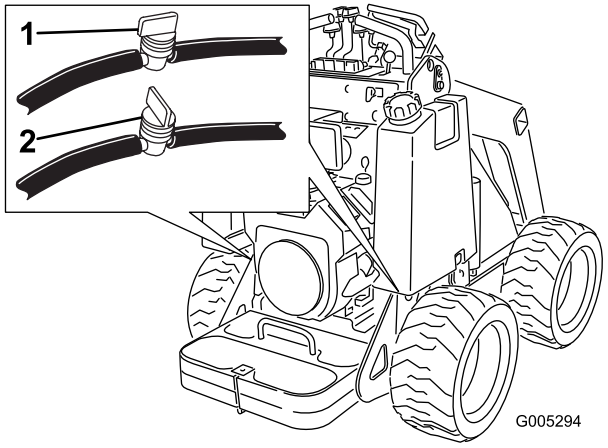

Figure 26

1. Fuel valve, open
2. Fuel valve, closed

4. Loosen the hose clamp at the fuel filter and slide it up the fuel line away from the filter.
5. Pull the fuel line off of the fuel filter, open the fuel valve, and allow the gasoline to drain into a gas can or drain pan.
6. Install the fuel line onto the fuel filter.

7. Slide the hose clamp close to the fuel filter to secure the fuel line.
8. Open the fuel valves in the hoses near the bottom of the fuel tanks as illustrated in Figure 26.

Note: Now is the best time to install a new fuel filter because the fuel tank is empty.

Electrical System Maintenance

Warning

CALIFORNIA
Proposition 65 Warning

Battery posts, terminals, and related accessories contain lead and lead compounds, chemicals known to the State of California to cause cancer and reproductive harm. Wash hands after handling.

Replacing the Battery

When the battery no longer holds a charge, replace it.

Important: Use only a genuine Toro replacement battery.

1. Park the traction unit on a level surface, raise the loader arms, and install the cylinder locks.
2. Stop the engine and remove the key.
3. Remove the hood.
4. Remove the wing nuts and bar securing the battery (Figure 27).

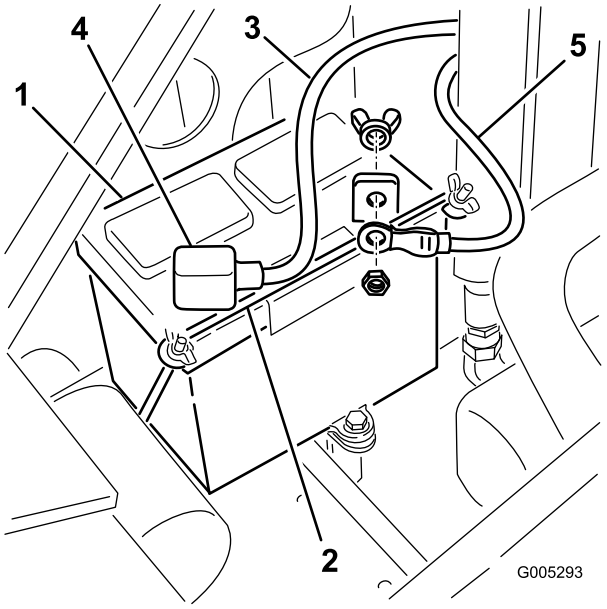

Figure 27

1. Battery
2. Bar
3. Positive cable
4. Rubber cover
5. Negative cable

Battery terminals or metal tools could short against metal components, causing sparks. Sparks can cause the battery gasses to explode, resulting in personal injury.

- **When removing or installing the battery, do not allow the battery terminals to touch any metal parts of the traction unit.**
- **Do not allow metal tools to short between the battery terminals and metal parts of the traction unit.**

5. Disconnect the negative (black) battery cable from the battery, saving the bolt and nut.
6. Disconnect the positive (red) battery cable from the battery, saving the bolt and nut.
7. Gently push the hydraulic hoses aside and lift the battery out of the chassis.
8. Activate the new battery as directed on the battery labeling.
9. Install the battery into the chassis (Figure 27).
10. Secure the battery in the chassis (Figure 27).
11. Using the bolt and wing nut supplied with the battery, connect the positive (red) cable to the

positive (+) battery post (Figure 27). Slide the rubber cover over the battery post.

Incorrect battery cable routing could damage the traction unit and cables, causing sparks. Sparks can cause the battery gasses to explode, resulting in personal injury.

- **Always disconnect the negative (black) battery cable before disconnecting the positive (red) cable.**
- **Always connect the positive (red) battery cable before connecting the negative (black) cable.**

12. Using the bolt and wing nut supplied with the battery, connect the negative (black) cable to the negative (-) battery post (Figure 27).

    Note: Ensure that the battery cables do not contact any sharp edges or each other.

Servicing the Battery

Important: The following procedures apply when servicing a (dry) battery that has replaced the original battery. The original (wet) battery does not require service.

Check the electrolyte level in the battery every 100 hours. Always keep the battery clean and fully charged. Use a paper towel to clean the battery case. If the battery terminals are corroded, clean them with a solution of four parts water and one part baking soda. Apply a light coating of grease to the battery terminals to reduce corrosion.

Voltage: 12 v, 450 Cold Cranking Amps

Checking the Electrolyte Level

1. Stop the engine and remove the key.
2. Remove the hood.
3. Look at the side of the battery. The electrolyte must be up to the Upper line (Figure 28). Do not allow the electrolyte to fall below the Lower line (Figure 28).

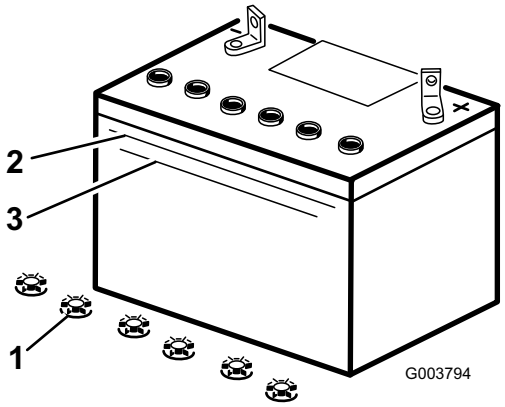

Figure 28

1. Filler caps
2. Upper line
3. Lower line

4. If the electrolyte is low, add the required amount of distilled water; refer to Adding Water to the Battery.

Adding Water to the Battery

The best time to add distilled water to the battery is just before you operate the traction unit. This lets the water mix thoroughly with the electrolyte solution.

Battery electrolyte contains sulfuric acid which is a deadly poison and causes severe burns.

- **Do not drink electrolyte and avoid contact with skin, eyes or clothing. Wear safety glasses to shield your eyes and rubber gloves to protect your hands.**
- **Fill the battery where clean water is always available for flushing the skin.**

1. Remove the battery from the traction unit.

   Important: Never fill the battery with distilled water while the battery is installed in the traction unit. Electrolyte could be spilled on other parts and cause corrosion.

2. Clean the top of the battery with a paper towel.
3. Remove the filler caps from the battery (Figure 28).
4. Slowly pour distilled water into each battery cell until the electrolyte level is up to the Upper line (Figure 28) on the battery case.

Important: **Do not overfill the battery because electrolyte (sulfuric acid) can cause severe corrosion and damage to the chassis.**

5. Wait five to ten minutes after filling the battery cells. Add distilled water, if necessary, until the electrolyte level is up to the Upper line (Figure 28) on the battery case.
6. Install the battery filler caps.

Charging the Battery

Charging the battery produces gasses that can explode.

Never smoke near the battery and keep sparks and flames away from battery.

Important: **Always keep the battery fully charged (1.265 specific gravity). This is especially important to prevent battery damage when the temperature is below 325F (05C).**

1. Check the electrolyte level; refer to Checking Electrolyte Level.
2. Make sure the filler caps are installed in the battery.
3. Charge the battery for 10 to 15 minutes at 25 to 30 amps or 30 minutes at 4 to 6 amps (Figure 29). Do not overcharge the battery.

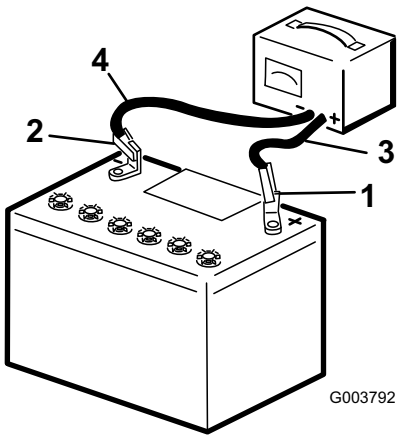

Figure 29

1. Positive battery post
2. Negative battery post
3. Red (+) charger lead
4. Black (-) charger lead

4. When the battery is fully charged, unplug the charger from the electrical outlet, then disconnect the charger leads from the battery posts (Figure 29).

Hydraulic System Maintenance

Replacing the Hydraulic Filter

Important: **Do not substitute an automotive oil filter or severe hydraulic system damage may result.**

Change the hydraulic filter after the first 8 operating hours and then every 400 operating hours thereafter.

1. Position traction unit on a level surface.
2. Raise the loader arms and install the cylinder locks, stop the engine, and remove the key.
3. Remove the hood.
4. Place a drain pan under the filter.
5. Remove the old filter (Figure 30) and wipe the surface of the filter adapter gasket clean.

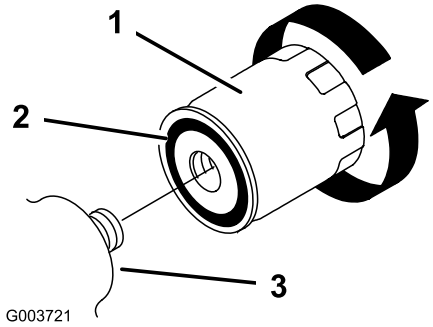

Figure 30

1. Hydraulic filter

6. Apply a thin coat hydraulic fluid to the rubber gasket on the replacement filter (Figure 30).
7. Install the replacement hydraulic filter onto the filter adapter (Figure 30). Tighten it clockwise until the rubber gasket contacts the filter adapter, then tighten the filter an additional 1/2 turn.
8. Clean up any spilled fluid.
9. Start the engine and let it run for about two minutes to purge air from the system.

10. Stop the engine and check for leaks.

Hydraulic fluid escaping under pressure can penetrate skin and cause injury. Fluid injected into the skin must be surgically removed within a few hours by a doctor familiar with this form of injury or gangrene may result.

- **Keep your body and hands away from pin hole leaks or nozzles that eject high pressure hydraulic fluid.**
- **Use cardboard or paper to find hydraulic leaks, never use your hands.**

11. Check the fluid level in the hydraulic tank (refer to Checking the Hydraulic Fluid in Operation, page 17) and add fluid to raise the level to mark on dipstick. Do not over fill the tank.
12. Install the hood.
13. Remove and store the cylinder locks and lower the loader arms.

Changing the Hydraulic Fluid

Change the hydraulic fluid yearly.

1. Position the traction unit on a level surface.
2. Raise the loader arms and install the cylinder locks.
3. Stop the engine and remove the key.
4. Remove the hood.
5. Place a large drain pan under the traction unit that can hold at least 17 US gallons (67 l).
6. Remove the drain plug from the bottom of the hydraulic tank and allow the fluid to completely drain out.
7. Install the drain plug.
8. Fill the hydraulic tank with approximately 15 US gallons (57 L) of 10W-30 or 15w40 detergent, diesel engine oil (API service CH-4 or higher); refer to Checking Hydraulic Fluid in Operation, page 17.

   Note: Dispose of used oil at a certified recycling center.

9. Install the hood.
10. Remove and store the cylinder locks and lower the loader arms.

Checking the Hydraulic Lines

After every 25 operating hours, check the hydraulic lines and hoses for leaks, loose fittings, kinked lines, loose mounting supports, wear, weather, and chemical deterioration. Replace all moving hydraulic hoses every 1500 hours or 2 years, which ever comes first. Make necessary repairs before operating.

Hydraulic fluid escaping under pressure can penetrate skin and cause injury. Fluid injected into the skin must be surgically removed within a few hours by a doctor familiar with this form of injury or gangrene may result.

- **Keep your body and hands away from pin hole leaks or nozzles that eject high pressure hydraulic fluid.**
- **Use cardboard or paper to find hydraulic leaks, never use your hands.**

Storage

1. Lower the loader arms, stop the engine, and remove the key.
2. Remove dirt and grime from the external parts of the entire traction unit, especially the engine. Clean dirt and chaff from the outside of the engine's cylinder head fins and blower housing.

   Important: You can wash the traction unit with mild detergent and water. Do not pressure wash the traction unit. Avoid excessive use of water, especially near the control panel, engine, hydraulic pumps, and motors.
3. Service the air cleaner; refer to Servicing the Air Cleaner.
4. Grease the traction unit; refer to Greasing the Traction Unit.
5. Change the crankcase oil; refer to Servicing the Engine Oil.
6. Remove the spark plugs and check the condition of each; refer to Servicing the Spark Plugs.
7. With the spark plugs removed from the engine, pour two tablespoons of engine oil into each spark plug hole.
8. Place rags over the spark plug holes to catch any oil spray, then use the starter to crank the engine and distribute the oil inside the cylinder.
9. Install the spark plugs, but do not install the wires on the spark plugs.
10. Check the tire pressure; refer to Checking the Tire Pressure.
11. Charge the battery; refer to the Setup section.
12. For storage over 30 days, prepare the traction unit as follows:

    A. Add a petroleum based stabilizer/conditioner to fuel in the tank. Follow mixing instructions from stabilizer manufacturer (1 oz. per gallon). **Do not use an alcohol based stabilizer (ethanol or methanol).**

    Note: A fuel stabilizer/conditioner is most effective when mixed with fresh gasoline and used at all times.

    B. Run the engine to distribute conditioned fuel through the fuel system (5 minutes).

    C. Stop the engine, allow it to cool, and drain the fuel tanks; refer to Draining the Fuel Tank.

    D. Start the engine and run it until it stops.

    E. Choke the engine.

    F. Start and run the engine until it will not start again.

    G. Dispose of fuel properly. Recycle as per local codes.

    Important: Do not store stabilizer/conditioned gasoline over 90 days.
13. Check and tighten all bolts, nuts, and screws. Repair or replace any part that is damaged or defective.
14. Paint all scratched or bare metal surfaces. Paint is available from your Authorized Service Dealer.
15. Store the traction unit in a clean, dry garage or storage area. Remove the key from the ignition switch and keep it in a memorable place.
16. Cover the traction unit to protect it and keep it clean.

Important: When removing the traction unit from storage, charge the battery; refer to the Setup section.

Troubleshooting

Problem	Possible Cause	Corrective Action
The starter does not crank	1. The auxiliary hydraulics lever is not in the neutral position. 2. The battery is discharged. 3. The electrical connections are corroded or loose. 4. The relay or switch is damaged.	1. Move the lever to the neutral position. 2. Charge the battery or replace it. 3. Check the electrical connections for good contact. 4. Contact your Authorized Service Dealer.
The engine will not start, starts hard, or fails to keep running.	1. The fuel tank is empty. 2. The choke is not on. 3. The air cleaner is dirty. 4. The spark plug wires are loose or disconnected. 5. The spark plugs are pitted, fouled, or the gap is incorrect. 6. There is dirt in the fuel filter. 7. Dirt, water, or stale fuel is in fuel system.	1. Fill the fuel tank with gasoline. 2. Move the choke lever fully forward. 3. Replace the air cleaner elements. 4. Install the wires on the spark plugs. 5. Install new, correctly gapped spark plugs. 6. Replace the fuel filter. 7. Contact your Authorized Service Dealer.
The engine loses power.	1. The engine load is excessive. 2. The air cleaner is dirty. 3. The oil level in crankcase is low. 4. The cooling fins and air passages under the engine blower housing are plugged. 5. The spark plugs are pitted, fouled, or the gap is incorrect. 6. There is dirt in the fuel filter. 7. Dirt, water, or stale fuel is in fuel system.	1. Reduce ground speed. 2. Replace the air cleaner elements. 3. Check and add oil to the crankcase. 4. Remove any obstructions from the cooling fins and air passages. 5. Install new, correctly gapped spark plugs. 6. Replace the fuel filter. 7. Contact your Authorized Service Dealer.

Problem	Possible Cause	Corrective Action
The engine overheats.	1. The engine load is excessive. 2. The oil level in the crankcase is low. 3. The cooling fins and air passages under the engine blower housing are plugged.	1. Reduce ground speed. 2. Check and add oil to the crankcase. 3. Remove any obstructions from the cooling fins and air passages.
Abnormal vibration.	1. The engine mounting bolts are loose.	1. Tighten the engine mounting bolts.
The traction unit does not drive.	1. The hydraulic fluid level low. 2. The hydraulic system is damaged. 3. Tow valves are open.	1. Check and add hydraulic fluid. 2. Contact your Authorized Service Dealer. 3. Close the tow valves.
When at rest, the loader arms creep downward more than 3 inches per hour (less than 3 inches an hour is normal for this traction unit).	1. The valve spool is leaking	1. Contact your Authorized Service Dealer.
When at rest, loader arms settle downward 2 inches quickly and then stop.	1. The cylinder seals are leaking	1. Replace the seals.

Schematics

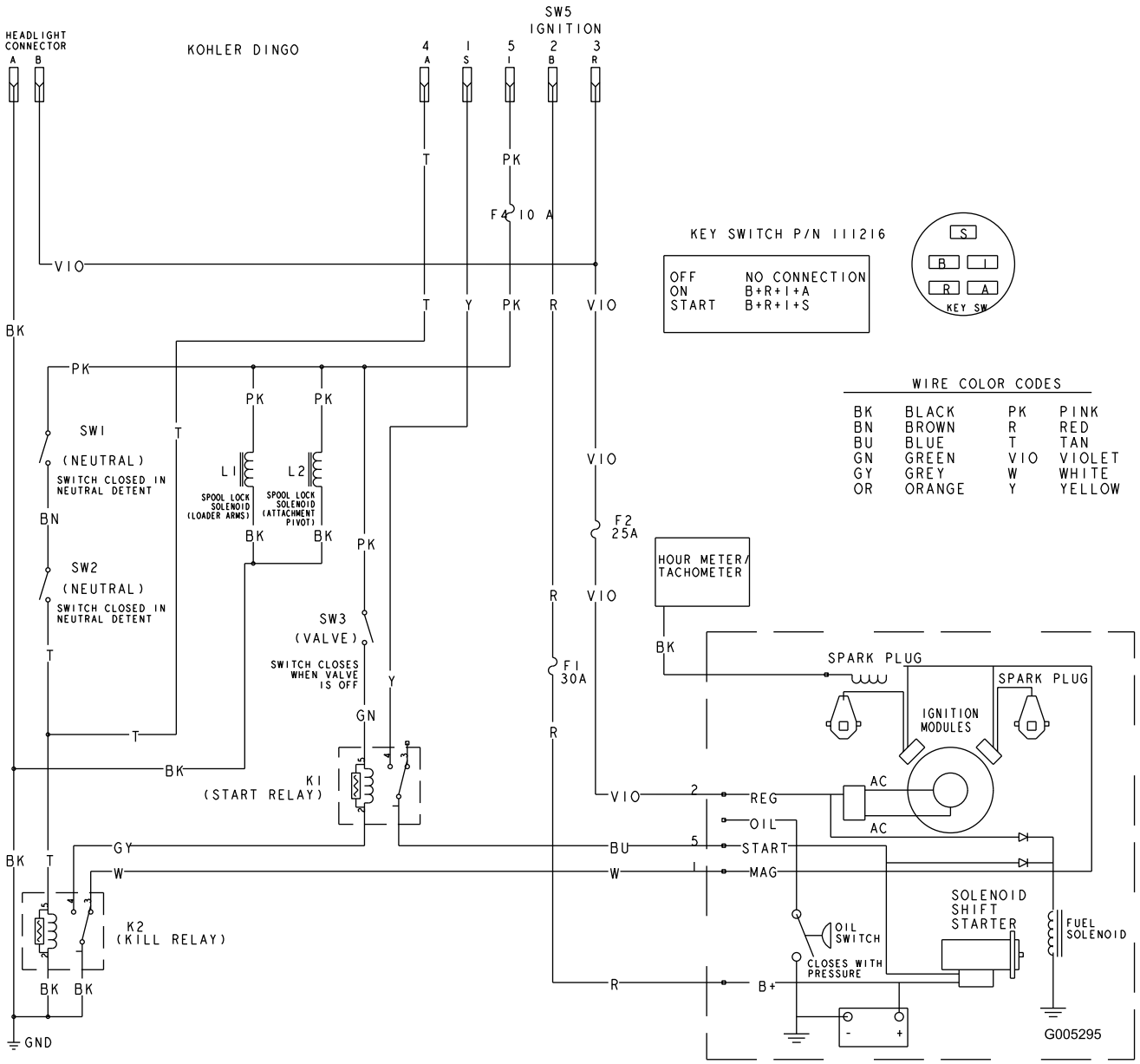

Electrical Schematic (Rev. A)

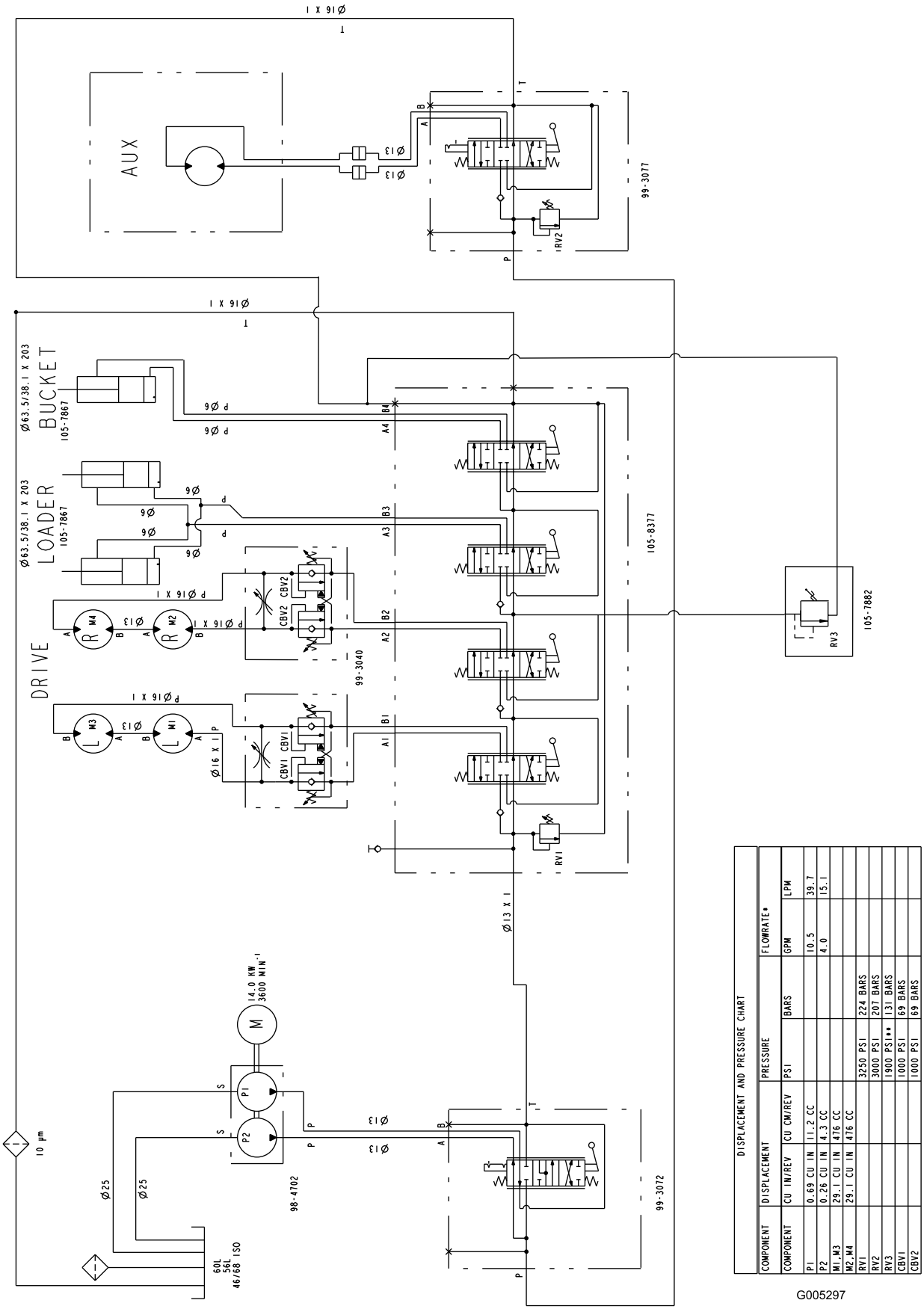

DISPLACEMENT AND PRESSURE CHART						
COMPONENT	DISPLACEMENT		PRESSURE		FLOWRATE*	
COMPONENT	CU IN/REV	CU CM/REV	PSI	BARS	GPM	LPM
P1	0.69 CU IN	11.2 CC			10.5	39.7
P2	0.26 CU IN	4.3 CC			4.0	15.1
M1, M3	29.1 CU IN	476 CC				
M2, M4	29.1 CU IN	476 CC				
RV1			3250 PSI	224 BARS		
RV2			3000 PSI	207 BARS		
RV3			1900 PSI**	131 BARS		
CBV1			1000 PSI	69 BARS		
CBV2			1000 PSI	69 BARS		

G005297

* FLOWRATE CALCULATED AT 3600 RPM AND 98% EFFICIENCY.
** CRACKING PRESSURE. FULL FLOW (~8 GPM) RELIEF PRESSURE APPROX. 2100 PSI.

Hydraulic Schematic (Rev. A)

Evaporative Emission Control Warranty Statement

California Evaporative Emission Control Warranty Statement
Your Warranty Rights and Obligations

Introduction

The California Air Resources Board and The Toro® Company are pleased to explain the evaporative emission control system's warranty on your 2007 model year equipment. In California, new equipment that use small off-road engines must be designed, built, and equipped to meet the State's stringent anti-smog standards. The Toro® Company must warrant the evaporative emission control system on your equipment for two years provided there has been no abuse, neglect or improper maintenance of your equipment.

Your evaporative emission control system may include parts such as: fuel lines, fuel line fittings, and clamps.

Manufacturer's Warranty Coverage:

This evaporative emission control system is warranted for two years. If any evaporative emission-related part on your equipment is defective, the part will be repaired or replaced by The Toro® Company.

Owner's Warranty Responsibilities:

- As the equipment owner, you are responsible for performance of the required maintenance listed in your Operator's Manual. The Toro® Company recommends that you retain all receipts covering maintenance on your equipment, but The Toro® Company cannot deny warranty solely for the lack of receipts.
- As the equipment owner, you should however be aware that The Toro® Company may deny you warranty coverage if your emission warranty parts have failed due to abuse, neglect, or improper maintenance or unapproved modifications.
- You are responsible for presenting your equipment to an Authorized Service Dealer as soon as the problem exists. The warranty repairs should be completed in a reasonable amount of time, not to exceed 30 days. If you have a question regarding your warranty coverage, you should contact The Toro® Company at 1-952–948–4027 or call us toll free at the number listed in your Toro Warranty statement.

Defects Warranty Requirements:

1. The warranty period begins on the date the engine or equipment is delivered to an ultimate purchaser.
2. General Evaporative Emissions Warranty Coverage. The emission warranty parts must be warranted to the ultimate purchaser and any subsequent owner that the evaporative emission control system when installed was:
   A. Designed, built, and equipped so as to conform with all applicable regulations; and
   B. Free from defects in materials and workmanship that causes the failure of a warranted part for a period of two years.
3. The warranty on evaporative emissions-related parts will be interpreted as follows:
   A. Any warranted part that is not scheduled for replacement as required maintenance in the written instructions must be warranted for the warranty period of two years. If any such part fails during the period of warranty coverage, it must be repaired or replaced by The Toro® Company. Any such part repaired or replaced under the warranty must be warranted for a time not less than the remaining warranty period.
   B. Any warranted part that is scheduled only for regular inspection in the written instructions must be warranted for the warranty period of two years. A statement in such written instructions to the effect of "repair or replace as necessary" will not reduce the period of warranty coverage. Any such part repaired or replaced under warranty must be warranted for a time not less than the remaining warranty period.
   C. Any warranted part that is scheduled for replacement as required maintenance in the written instructions must be warranted for the period of time prior to the first scheduled replacement point for that part. If the part fails prior to the first scheduled replacement, the part must be repaired or replaced by The Toro® Company. Any such part repaired or replaced under warranty must be warranted for a time not less than the remainder of the period prior to the first scheduled replacement point for the part.
   D. Repair or replacement of any warranted part under the warranty provisions of this article must be performed at no charge to the owner at an Authorized Service Dealer.
   E. Notwithstanding the provisions of subsection (D) above, warranty services or repairs must be provided at an Authorized Service Dealer.
   F. The owner must not be charged for diagnostic labor that leads to the determination that a warranted part is in fact defective, provided that such diagnostic work is performed at an Authorized Service Dealer.
   G. Throughout the evaporative emission control system's two year warranty period, The Toro® Company must maintain a supply of warranted parts sufficient to meet the expected demand for such parts.
   H. Manufacturer approved replacement parts must be used in the performance of any warranty maintenance or repairs and must be provided without charge to the owner. Such use will not reduce the warranty obligations of The Toro® Company.
   I. The use of any add-on or modified parts will be grounds for disallowing a warranty claim made in accordance with this article. The Toro® Company will not be liable under this Article to warrant failures of warranted parts caused by the use of an add-on or modified part.
   J. The Toro® Company shall provide any documents that describe the warranty procedures or policies within five working days of request by the Air Resources Board.

Emission Warranty Parts List:

The following lists includes the parts covered under this warranty:

- Fuel Lines
- Fuel Line Fittings
- Clamps

The Toro Dingo® Product Line Warranty

A One-Year Limited Warranty

Conditions and Products Covered

The Toro® Company and its affiliate, Toro Warranty Company, pursuant to an agreement between them, jointly warrant your Toro Dingo Product ("Product") to be free from defects in materials or workmanship. The following time periods apply from the date the Product is delivered to the original retail purchaser:

Products	Warranty Period
All traction units and attachments	1 year or 1000 operational hours, whichever occurs first
All engines	2 years

Where a warrantable condition exists, we will repair the Product at no cost to you including diagnosis, labor, and parts.

Instructions for Obtaining Warranty Service

If you think that your Toro Product contains a defect in materials or workmanship, follow this procedure:

1. Contact any Authorized Dingo Service Dealer to arrange service at their dealership. To locate a dealer convenient to you, access our website at www.Toro.com. U.S. Customers may also call 800-348-2424.
2. Bring the product and your proof of purchase (sales receipt) to the Service Dealer.

If for any reason you are dissatisfied with the Service Dealer's analysis or with the assistance provided, contact us at:

LCB Customer Service Department
Toro Warranty Company
8111 Lyndale Avenue South
Bloomington, MN 55420-1196
Toll Free: 888-577-7466 (U.S. customers)
Toll Free: 877-484-9255 (Canada customers)

Owner Responsibilities

You must maintain your Toro Product by following the maintenance procedures described in the *Operator's Manual*. Such routine maintenance, whether performed by a dealer or by you, is at your expense. Parts scheduled for replacement as required maintenance ("Maintenance Parts"), are warranted for the period of time up to the scheduled replacement time for that part. Failure to perform required maintenance and adjustments can be grounds for disallowing a warranty claim.

Items and Conditions Not Covered

Not all product failures or malfunctions that occur during the warranty period are defects in materials or workmanship. This express warranty does not cover the following:

- Product failures which result from the use of non-Toro replacement parts, or from installation and use of add-on, modified, or unapproved accessories
- Product failures which result from failure to perform required maintenance and/or adjustments
- Product failures which result from operating the Product in an abusive, negligent or reckless manner
- Parts subject to consumption through use unless found to be defective. Examples of parts which are consumed, or used up, during normal Product operation include, but are not limited to, digging teeth, tines, spark plugs, tires, tracks, filters, chains, etc.
- Failures caused by outside influence. Items considered to be outside influence include, but are not limited to, weather, storage practices, contamination, use of unapproved coolants, lubricants, additives, or chemicals, etc.
- Normal "wear and tear" items. Normal "wear and tear" includes, but is not limited to, worn painted surfaces, scratched decals or windows, etc.
- Any component covered by a separate manufacturer's warranty
- Pickup and delivery charges

General Conditions

Repair by an Authorized Toro Service Dealer is your sole remedy under this warranty.

Neither The Toro® Company nor Toro Warranty Company is liable for indirect, incidental or consequential damages in connection with the use of the Toro Products covered by this warranty, including any cost or expense of providing substitute equipment or service during reasonable periods of malfunction or non-use pending completion of repairs under this warranty.

Some states do not allow exclusions of incidental or consequential damages, or limitations on how long an implied warranty lasts, so the above exclusions and limitations may not apply to you.

This warranty gives you specific legal rights, and you may also have other rights which vary from state to state.

Except for the Emissions warranty referenced below, if applicable, there is no other express warranty. All implied warranties of merchantability and fitness for use are limited to the duration of this express warranty.

Note to California residents: The Emissions Control System on your Product may be covered by a separate warranty meeting requirements established by the U.S. Environmental Protection Agency (EPA) or the California Air Resources Board (CARB). The hour limitations set forth above do not apply to the Emissions Control System Warranty. Refer to the California Emission Control Warranty Statement printed in you operator's manual or contained in the engine manufacturer's documentation for details.

Countries Other than the United States or Canada

Customers who have purchased Toro products exported from the United States or Canada should contact their Toro Distributor (Dealer) to obtain guarantee policies for your country, province, or state. If for any reason you are dissatisfied with your Distributor's service or have difficulty obtaining guarantee information, contact the Toro importer. If all other remedies fail, you may contact us at Toro Warranty Company.