FORM NO. 3314-920

TORO®

MODEL NO. 30148-20001 & UP

PARTS CATALOG

48" RECYCLER CUTTING UNIT WIDE AREA MOWERS

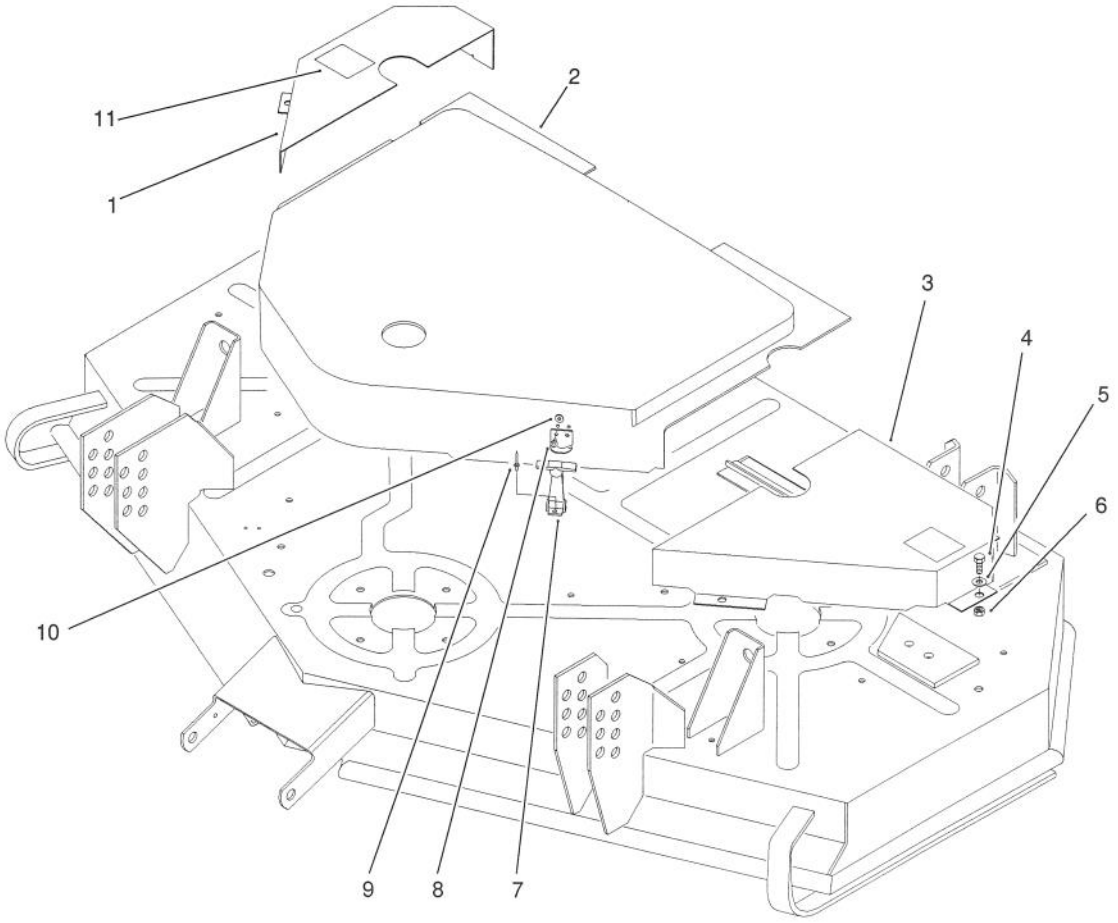

C-0702

COVER ASSEMBLY

Ref. No.	Part No.	Description	No. Used
1	82-8590	Cover - R.H.	1
2	82-8960	Cover - Center	1
3	82-8580	Cover - L.H.	1
4	3235-18	Screw - Hex Hd. Cap	6
5	3256-1	Washer - Flat	6
6	32117-2	Nut - Insert	6

Ref. No.	Part No.	Description	No. Used
7	59-9740	Latch Assembly	2
8	3290-415	Rivet - Dome Hd.	4
9	3290-271	Rivet - Pop	4
10	3256-13	Washer - Flat	4
11	61-5950	Decal - No Step	2

TPS

©The TORO Company - 1991

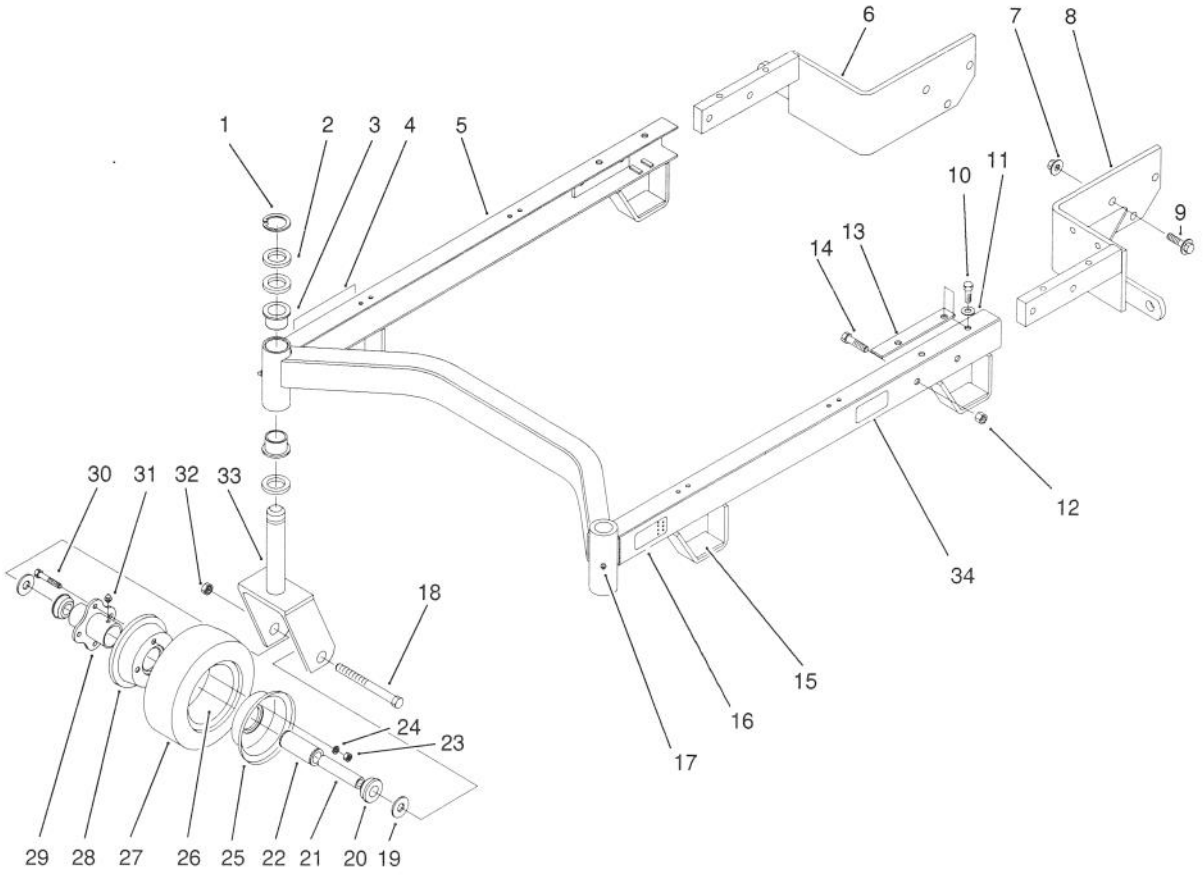

C-0703

CARRIER FRAME ASSEMBLY

Ref. No.	Part No.	Description	No. Used
1	32151-91	Ring - Retaining	2
2	3-6781	Washer - Thrust	8
3	28-9290	Bushing	4
4	68-8360	Decal - H.O.C	1
5	55-4631	Frame Suspension Ass'y	1
6	82-2430	Angle Bracket Ass'y R.H.	1
7	32128-23	Nut - Lock	6
8	82-2420	Angle Bracket Ass'y L.H.	1
9	3234-6	Screw - Hex Flange Hd.	6
10	3235-21	Screw - Hex Hd. Cap	4
11	3256-24	Washer - Flat	4
12	32152-2	Nut - Lock	4
13	62-6980	Shim - Carrier	2
14	323-9	Screw - Hex Hd. Cap	4
15	74-0340	Cushion - Rubber	4
16	74-0940	Decal - H.O.C.	1
17	302-5	Fitting - Grease	2

Ref. No.	Part No.	Description	No. Used
18	325-19	Screw - Hex Hd. Cap	2
19	3256-6	Washer - Flat	4
20	62-5580	Bushing	4
21	68-8980	Spanner	2
22	62-5570	Bearing	2
23	3217-6	Nut - Lock	8
24	3253-4	Washer - Lock	8
25	68-8930	Wheel Half - Male	2
26	68-8950	Tube w/Valve	2
27	68-8960	Tire	2
28	68-8920	Wheel Half - Female	2
29	68-8940	Hub - Centered	2
30	54-8890	Bolt - Wheel	8
31	302-61	Fitting - Grease	2
32	32153-5	Nut - Lock	2
33	74-0250	Front Caster Fork Ass'y	2
34	82-7480	Decal - H.O.C	2

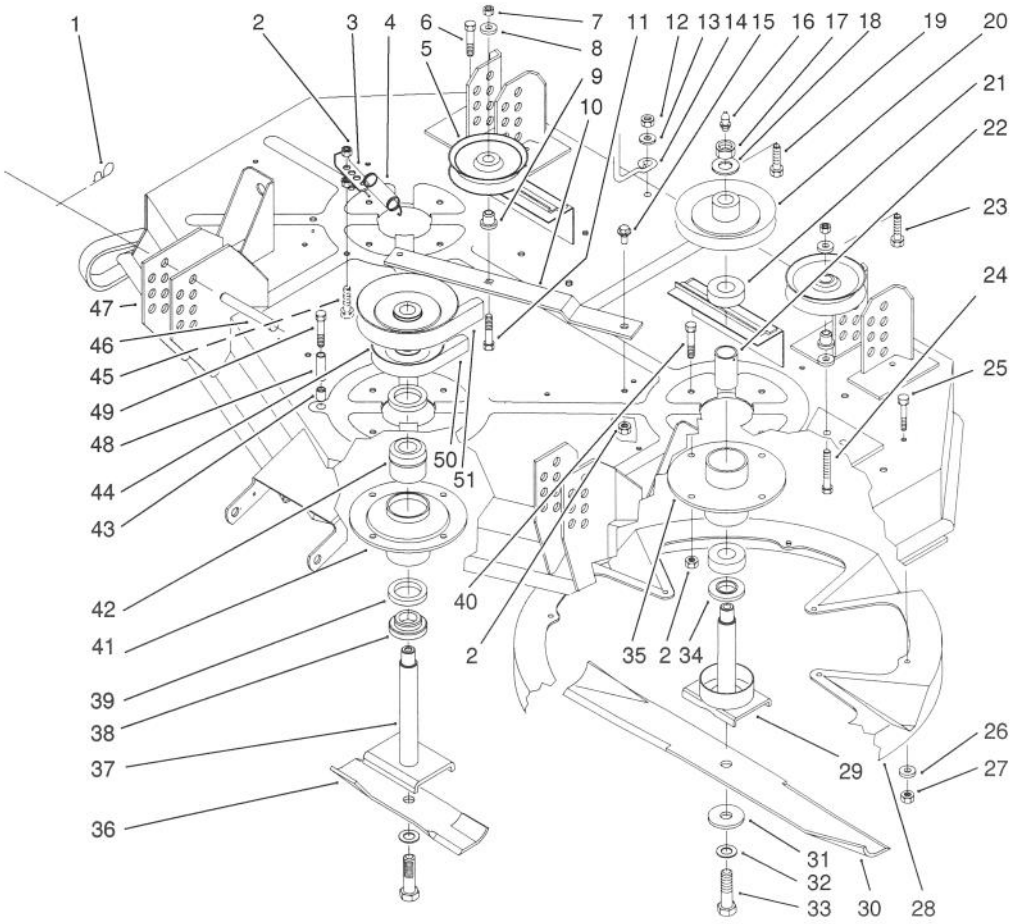

C-0706

DECK & SPINDLE ASSEMBLY

Ref. No.	Part No.	Description	No. Used
1	3290-355	Pin - Hair Cotter	4
2	3296-29	Nut - Lock	15
3	72-7590	Anchor - Deck Spring	1
4	54-1160	Spring - Extension Deck	1
5	65-5940	Pulley - Idler	2
6	321--6	Screw - Hex Hd. Cap	1
7	3296-39	Nut - Hex	2
8	7-0081	Washer - Flat	3
9	65-5950	Bushing - Pulley	2
10	72-7620	Lever - Idler	1
11	323-9	Screw - Hex Hd. Cap	1
12	32128-21	Nut - Flange Lock	2
13	3256-24	Washer - Flat	2
14	52-4782	Rod - Belt	1
15	19-1470	Bolt - Shoulder	1
16	302-2	Fitting - Grease	3
17	32146-20	Nut - Lock	3
18	7-4150	Spacer - Bearing	3
19	323-6	Screw - Hex Hd. Cap	2
20	67-7690	Pulley - Outside	2
21	251-257	Bearing - Ball	4
22	67-7580	Spacer - Bearing	2
23	323-6	Screw - Hex Hd. Cap	2
24	323-11	Screw - Hex Hd. Cap	1
25	321-4	Screw - Hex Hd. Cap	15
26	3256-1	Washer - Flat	16

Ref. No.	Part No.	Description	No. Used
27	3296-16	Nut - Lock	16
28	82-9890	Insert - Kicker	2
29	71-2780	Spindle Shaft	2
30	72-7730	Blade - L.H.	1
*	72-7740	Blade - R.H.	1
31	82-7460	Washer - Blade	2
32	3253-8	Washer - Lock	3
33	51-4060	Bolt - Blade	3
34	67-7570	Spacer - Spindle	2
35	67-7590	Housing - Spindle	2
36	72-7690	Blade - Center	1
37	51-3552	Spindle Shaft	1
38	27-0950	Spacer Spindle Bearing	1
39	253-139	Seal	2
40	322-4	Screw - Hex Hd. Cap	12
41	82-5990	Housing - Spindle	1
42	46-8530	Bearing Assembly	1
43	3290-472	Nut - Insert	1
44	82-2410	Pulley - Center	1
45	322-5	Screw - Hex Hd. Cap	1
46	283-55	Pin - Clevis	4
47	14-3729	Deck W/Decals	1
48	47-0920	Spacer - Tube	1
49	322-11	Screw - Hex Hd. Cap	1
50	82-2390	V-Belt - Deck	1
51	82-6420	V-Belt - Deck Drive	1

*Not Illustrated

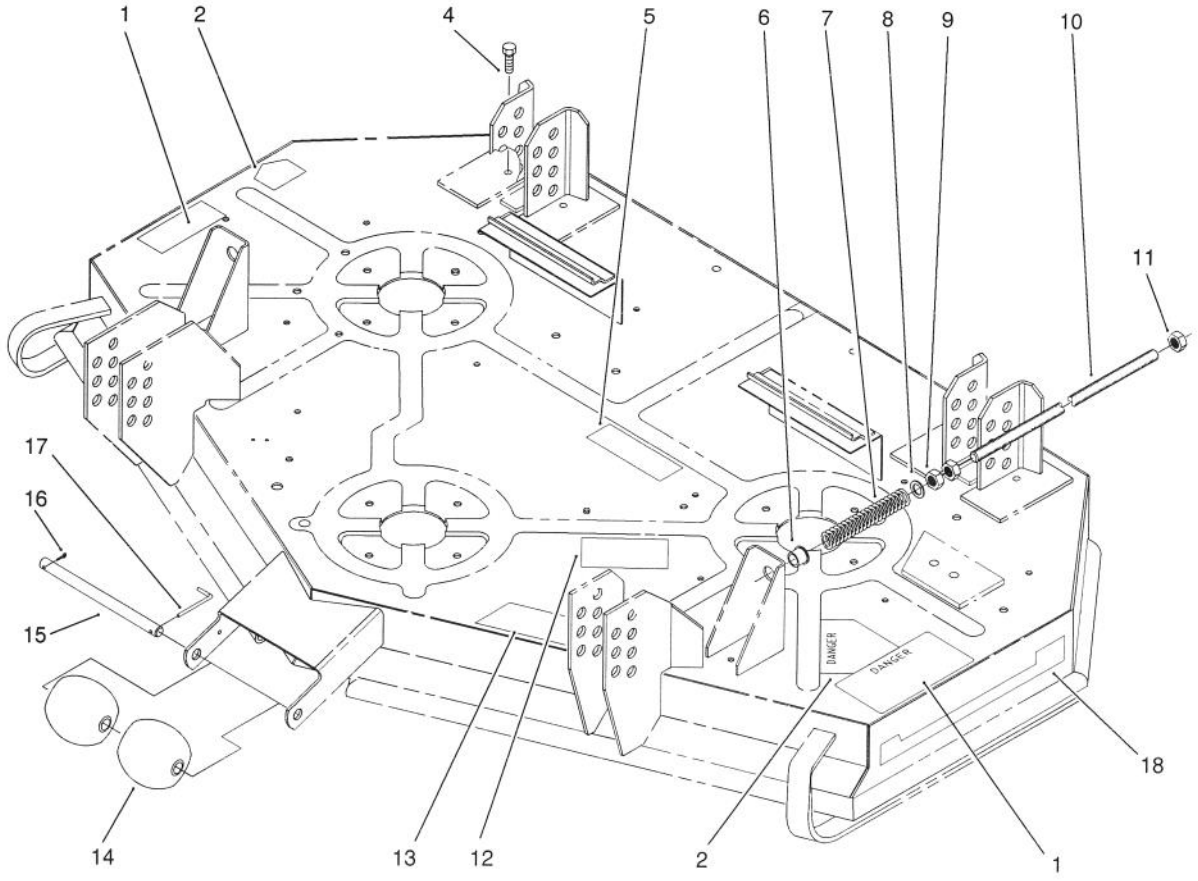

C–0710

ROLLER & SHAFT ADJUSTING ASSEMBLY

Ref. No.	Part No.	Description	No. Used
1	72–7890	Decal – Danger	2
2	43–8480	Decal – Danger	2
4	321–6	Screw – Hex Hd. Cap	1
5	72–7760	Decal – Belt Routing	1
6	256–156	Bushing	2
7	74–0290	Spring – Compression	2
8	41–8440	Washer	2
9	3218–5	Nut – Jam	4
10	74–0310	Shaft – Adjusting	2

Ref. No.	Part No.	Description	No. Used
11	3296–45	Nut – Lock	2
12	67–5360	Decal – Danger	1
13	68–8340	Decal – Caution	1
14	29–4820	Roller	2
15	40–6400	Shaft – Roller	1
16	3272–11	Pin – Cotter	1
17	57–0690	Pin – Special Cotter	1
18	82–8830	Decal – Recycle	2