Form No. 3351–743 Rev B

Right Hand Groomer Kit
Left Hand Groomer Kit
Reelmaster 5500–D, 6500–D & 6700–D

Model No. 03811
Model No. 03810

Installation Instructions

Note: The Right and Left Groomer Kits can be used on Reelmaster 55/6000 Cutting Unit Models 03860, 03861 & 03862 with or without a Rear Roller Brush Kit.

Loose Parts

Description	Quantity
Drive assembly w/O–ring Bolt M10 x 1.5 Bolt 3/8–16 x 1.25	1 2 2
Height of cut assembly–RH Capscrew 3/8–16 x .75” lg. Washer–.406 I.D. x .812 O.D. x .065 Thk. Washer–.406 I.D. x .812 O.D. x .030 Thk.	1 2 8 4
Alignment tool	1
Height of cut assembly–LH Capscrew 3/8–16 x .75” lg. Washer–.406 I.D. x .812 O.D. x .065 Thk. Washer–.406 I.D. x .812 O.D. x .030 Thk.	1 8 4
Groomer assembly Seal guard	1 2
Groomer plate assembly–LH	1
Groomer plate Brush plate–LH	1 1
Retaining plate Flange head screw–.312 x .62” lg. Spacer Retaining ring	1 2 2 1
Drive pulley Square key Flange head screw–.312 x .62” lg.	1 1 1
Pulley spacer Washer–.474 I.D. x .938 O.D. x .030 Thk. Washer–.474 I.D. x .938 O.D. x .030 Thk. Drive pulley Square key Flange nut–3/8–16	1 2 2 1 1 1
Belt	1
Cover (Groomer) Cover (Brush & groomer) Flange nut–5/16–18	1 2 2

Note: These instructions and illustrations show the installation of the Left Hand Groomer Kit onto the cutting units with the counter weights mounted on the left end of the cutting unit.

Use the following installation instructions if the cutting units are not equipped with rear roller brushes. If the cutting units are equipped with rear roller brushes, proceed to page 6 for the installation instructions.

For Cutting Units Not Equipped with a Roller Brush

1. Park the traction unit on a level surface and engage the parking brake.
2. Ensure that the cutting units are disengaged. Lower the cutting units to the ground. Turn the engine off and remove the key. Remove all cutting units from traction unit.
3. Remove the top cone nuts securing both **front** roller support rods to the height of cut brackets (Fig. 1).

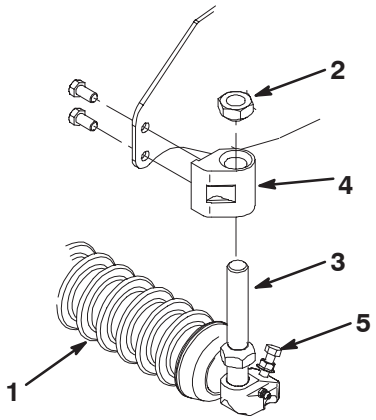

Figure 1

1. Front roller
2. Cone nut
3. Rod support
4. Height of cut bracket
5. Roller shaft screw

4. Loosen the roller shaft screw on one height of cut bracket (Fig. 1). Slide the rod supports and roller assembly out of the height of cut brackets.

© 2005 by The Toro Company
8111 Lyndale Avenue South
Bloomington, MN 55420-1196

All Rights Reserved
Printed in the USA

5. Remove the (2) capscrews securing the height of cut brackets to each end of the cutting unit (Fig. 1). Discard the height of cut brackets and the capscrews.

6. Remove the (2) bolts securing the counter weight to the left end of the cutting unit. Remove and discard the counter weight and O–ring (Fig. 2).

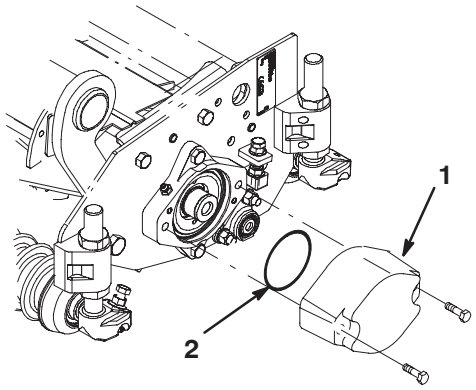

Figure 2

1. Counter weight
2. O–ring

7. Mount the new drive assembly and new O–ring (Fig. 3) to the left end of the cutting unit as follows:

- If the cutting unit serial number is higher than 219999999, use (2) 3/8–16 x 1.25" bolts to mount the drive assembly. Torque the bolts to 34 to 42 ft–lbs.
- If the cutting unit serial number is prior to 219999999, use (2) M10 x 1.5 bolts to mount the drive assembly. Torque the bolts to 34 to 42 ft–lbs.

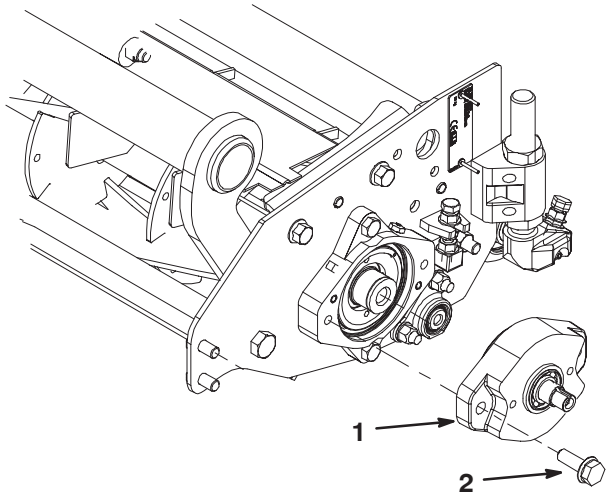

Figure 3

1. Drive assembly
2. Tap bolt

8. Loosely mount the LH height of cut assembly to the left end of the cutting unit with (2) 3/8–16 x .75" lg. capscrews and (2) .406 ID x .812 OD x .065 thk. washers (Fig. 4).

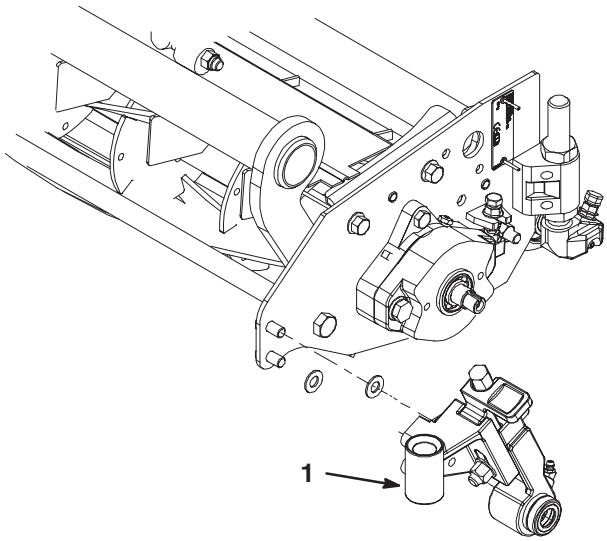

Figure 4

1. L.H. height of cut assembly

9. Position the edge of the alignment tool onto the flat surfaces of the drive assembly and the LH height of cut assembly, as shown in figure 5. If the surfaces do not align, the LH height of cut assembly can be adjusted in or out by adding or substituting .406 ID x .812 OD x .030 thk. washers. The surfaces should be aligned to within .030 in.

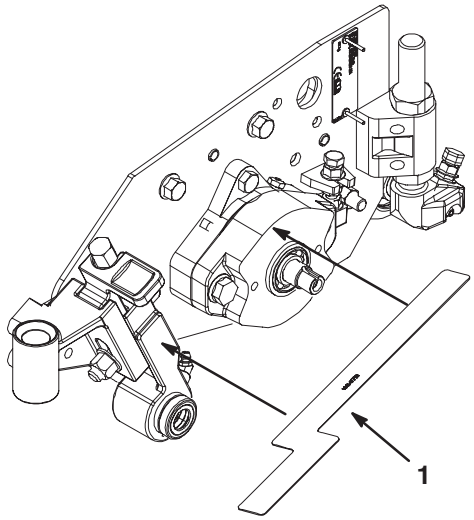

Figure 5

1. Alignment tool

10. Mount the groomer plate assembly to the drive assembly with the retaining plate and (2) .312 x .62" lg. flange head screws and spacers (Fig. 6). Make sure the groomer plate is positioned over the LH height of cut assembly .Torque the screws to 200 in–lbs.

11. Secure the groomer plate assembly to the height of cut assembly with a retaining ring (Fig. 6).

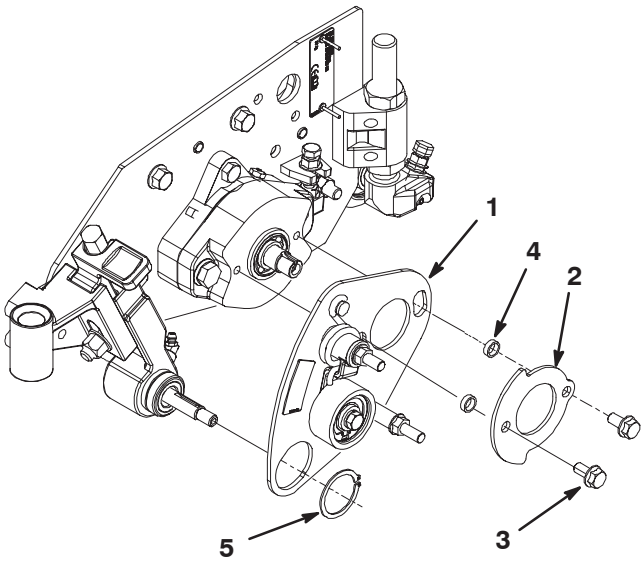

Figure 6

1. Groomer plate
2. Retaining plate
3. Flange head capscrew
4. Spacer
5. Retaining ring

12. Tighten the capscrews securing the L.H. height of cut assembly to the left end of the cutting unit (Fig. 4). Torque the capscrews to 35 ft–lbs.

13. Insert a seal guard onto each end of the groomer shaft assembly (Fig. 7). Apply a film of grease onto the seal lip. The seal guards are to be positioned so they curve toward each end of the shaft.

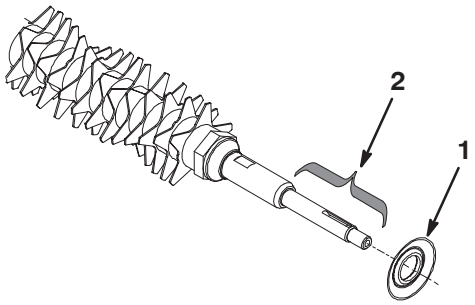

Figure 7

1. Seal guard
2. Grease here (2)

14. Apply a film of grease to each end of the groomer shaft (Fig. 7) and onto the seals in the L.H. height of cut assembly.

15. Carefully insert the key way end of the groomer shaft into the LH height of cut assembly until the shaft **clicks** into position (Fig. 8).Take care not to damage the seals in the height of cut assembly.

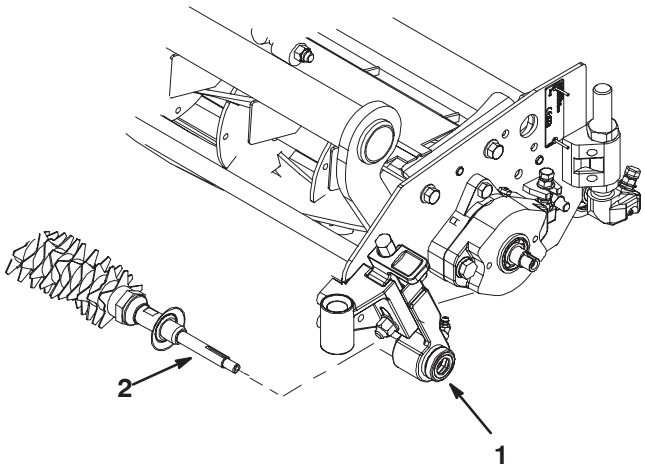

Figure 8

1. L.H. height of cut assembly
2. Groomer shaft

16. Apply a film of grease onto the seals in the R.H. height of cut assembly. Insure that the O–ring is in position on the RH end of the groomer shaft.

17. Carefully insert the RH height of cut assembly onto the RH end of the groomer shaft until the shaft **clicks** into position (Fig. 9).Take care not to damage the seals in the height of cut assembly.

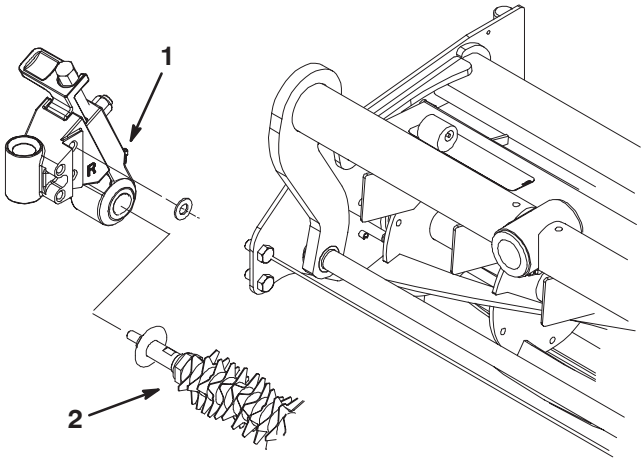

Figure 9

1. R.H. height of cut assembly
2. Groomer

18. Mount the RH height of cut assembly to the right end of the cutting unit with the (2) 3/8–16 x .75” lg capscrews and (2) .406 ID x .812 OD x .065 thk. washers (Fig. 9).

Note: If additional washers were used to shim out the LH height of cut assembly, washers are not required on the RH height of cut assembly. If additional washers were not used on the LH side they should be used on the RH side. Torque the RH height of cut assembly mounting capscrews to 35 ft–lbs.

19. Slide the seal guards against the height of cut assembly bearing housings on both ends of the groomer shaft (Fig. 10).

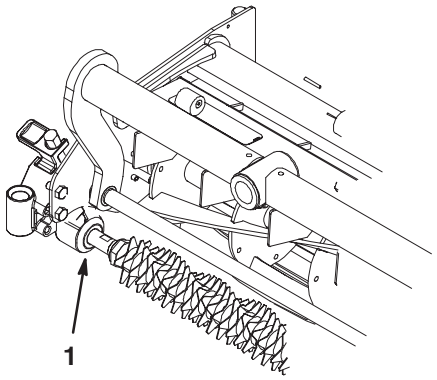

Figure 10

1. Seal guard

20. Mount the drive pulley to the drive assembly shaft with a .125 x .312 square key and a .312 x .62” lg. flange head screw (Fig. 11). Apply Loctite 242 to the threads of the screw. Torque the capscrew to 200 in–lbs.

21. Apply a film of grease to the pulley spacer (Fig. 11) and carefully insert it into the L.H. height of cut assembly Take care not to damage the seals in the height of cut assembly.

22. Insert the .474 ID x .938 OD x .065” thk. washer onto the groomer shaft (Fig. 11).

23. Loosely install the driven pulley to the height of cut assembly shaft with a square key and a 3/8–16 flange head nut (Fig. 11).

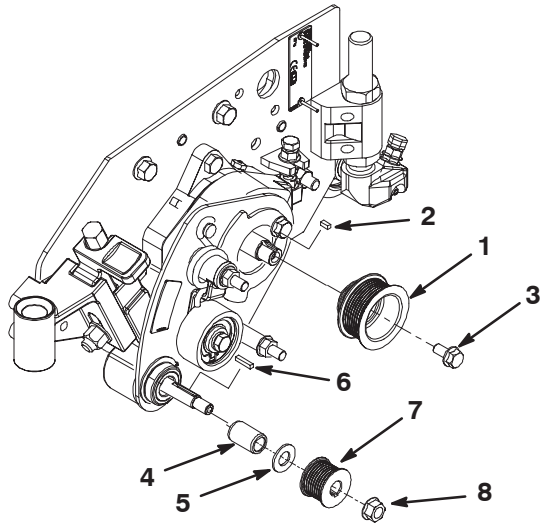

Figure 11

1. Drive pulley
2. Square key
3. Flange head capscrew
4. Pulley spacer
5. Washer
6. Square key
7. Driven pulley
8. Flange nut

24. Using the alignment tool, check the alignment of the drive and driven pulleys (Fig. 12). If the pulleys do not align, the driven pulley can be adjusted in or out by adding or substituting .474 ID x .938 OD x .030 thk. washers. The pulleys should be aligned to within .015 in. After the pulleys are aligned, torque the nut to 25 ft–lbs.

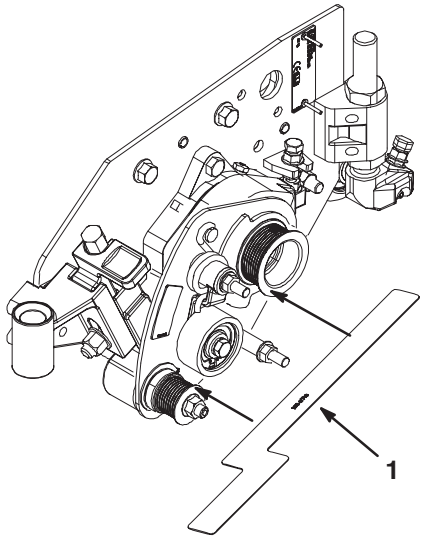

Figure 12

1. Alignment tool

25. Install the belt around the drive and driven pulleys and under the idler pulley (Fig. 13).

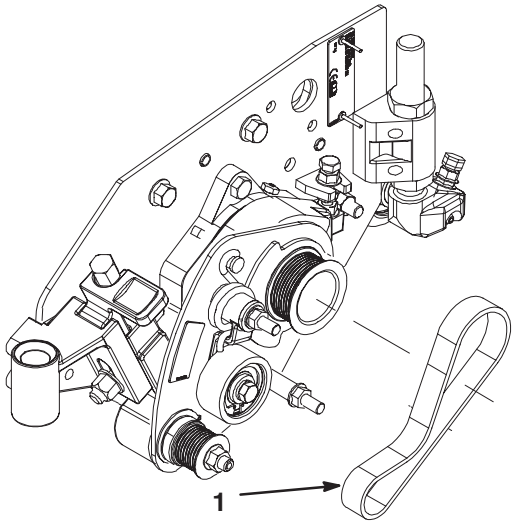

Figure 13

1. Belt

26. Insert the cover onto the tap bolts and secure with (2) 5/16–18 flange nuts (Fig. 14). Torque the nuts to 90 to 120 in–lbs.

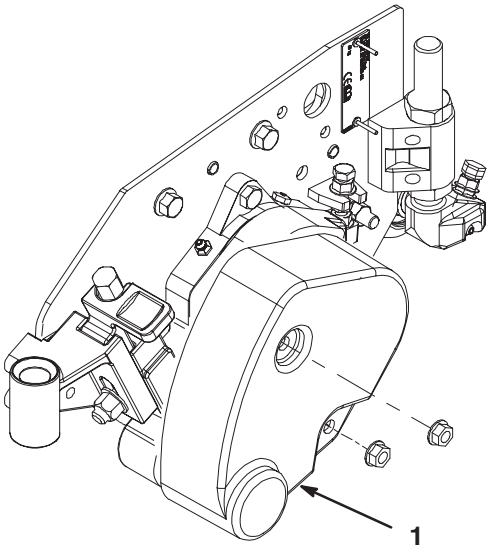

Figure 14

1. Cover

27. Install the front roller and set the desired height of cut.

28. Fill each reel bearing housing with grease (Fig. 15). Excess grease will purge between the inboard seals and the seal guards.

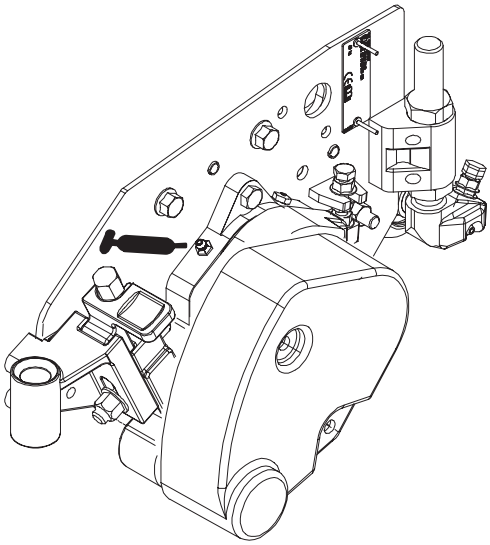

Figure 15

29. Grease each of the groomer shaft bearings (2 or 3 pumps maximum) (Fig. 16). Do not over-grease as excess grease may cause seal failure. Wipe off any excess grease.

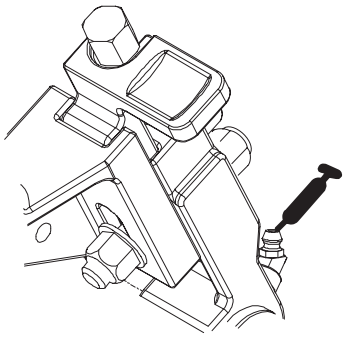

Figure 16

Note: After greasing groomer bearings, operate groomer for 30 seconds, stop machine and wipe excess grease from groomer shaft and seals.

Important It is recommended that the Lynch pin (Fig. 17) be installed on the front center cutting unit to prevent the covers from contacting each other. Also, it is recommended that the Lynch pin be installed on all the rear cutting units on the Reelmaster 5500 series.

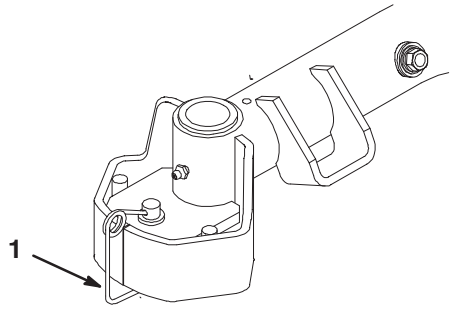

Figure 17

1. Lynch pin

For Cutting Units Equipped with Rear Roller Brushes

1. Remove the (2) washers and lock nuts securing the belt cover to the mounting bolts (Fig. 18).

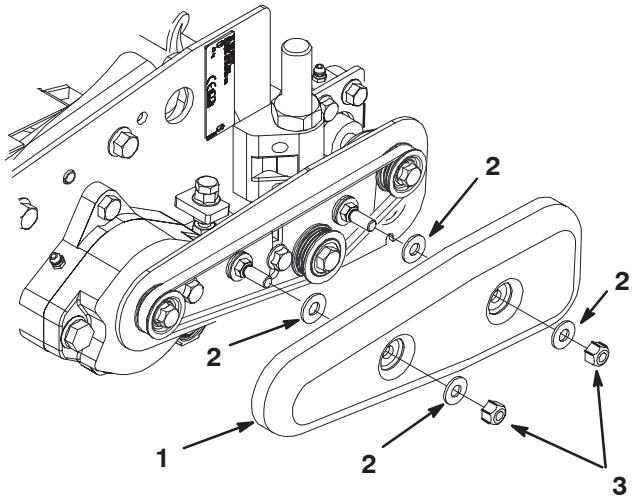

Figure 18

1. Cover
2. Locknuts
3. Washers

2. Remove the washer from each cover mounting bolt (Fig. 18).

3. Loosen the (2) flange bolts securing the brush plate assembly to the drive assembly and the threaded spacer (Fig. 19).

4. Remove the belt from the pulleys (Fig. 19).

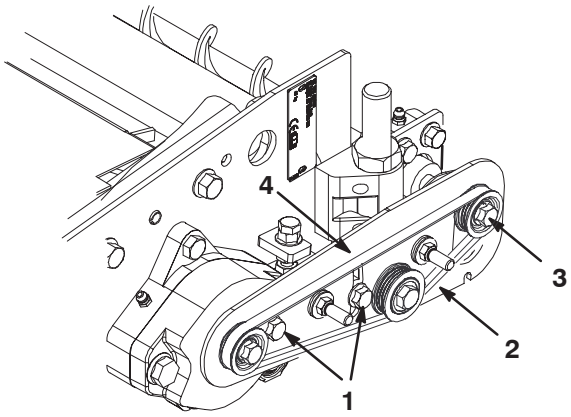

Figure 19

1. Flange bolts
2. Belt
3. Roller brush pulley

5. Remove the bolt securing the pulley to the roller brush shaft (Fig. 19).

Note: Hold the roller shaft with a 7/16” wrench to loosen pulley bolt.

6. Remove the pulley and key from the roller brush shaft (Fig. 19).

7. Remove the (2) flange bolts securing the brush plate assembly to the drive assembly and the threaded spacer (Fig. 20).

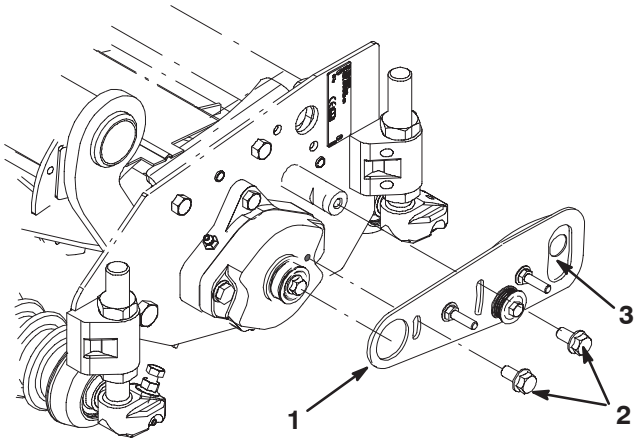

Figure 20

1. Pivot plate assembly
2. Flange bolts
3. Guard plate

8. Remove the (2) bolts securing the drive assembly to the left end of the cutting unit. Remove and discard the drive assembly and O–ring (Fig. 21).

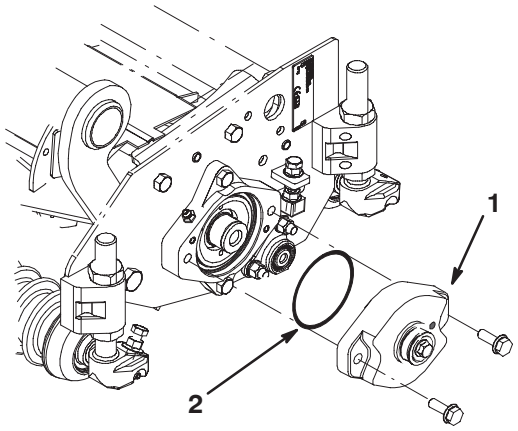

Figure 21

1. Drive assembly
2. O–ring

9. Remove the top cone nuts securing both **front** roller support rods to the height of cut brackets (Fig. 22).

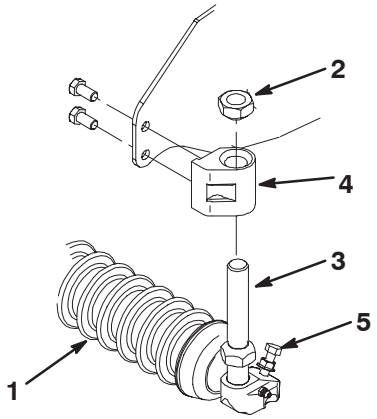

Figure 22

1. Front roller
2. Cone nut
3. Rod support
4. Height of cut bracket
5. Roller shaft screw

10. Loosen the roller shaft screw on one height of cut bracket (Fig. 22). Slide the rod supports and roller assembly out of the height of cut brackets.

11. Remove the (2) capscrews securing the height of cut brackets to each end of the cutting unit (Fig. 22). Discard the height of cut brackets and the capscrews.

12. Mount the new drive assembly and new O–ring (Fig. 23) to the left end of the cutting unit as follows:

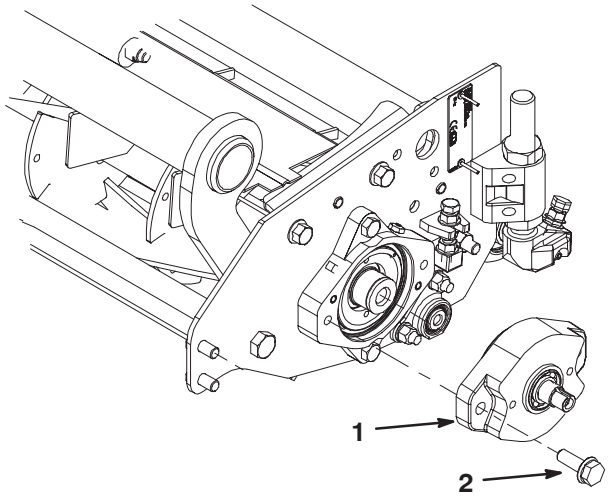

Figure 23

1. Drive assembly
2. Tap bolt

- If the cutting unit serial number is higher than 219999999, use (2) 3/8–16 x 1.25” bolts to mount the drive assembly. Torque the bolts to 34 to 42 ft–lbs.
- If the cutting unit serial number is prior to 219999999, use (2) M10 x 1.5 bolts to mount the drive assembly. Torque the bolts to 34 to 42 ft–lbs.

13. Loosely mount the LH height of cut assembly to the left end of the cutting unit with (2) 3/8–16 x .75” lg. capscrews and (2) .406 ID x .812 OD x .065 thk. washers (Fig. 24).

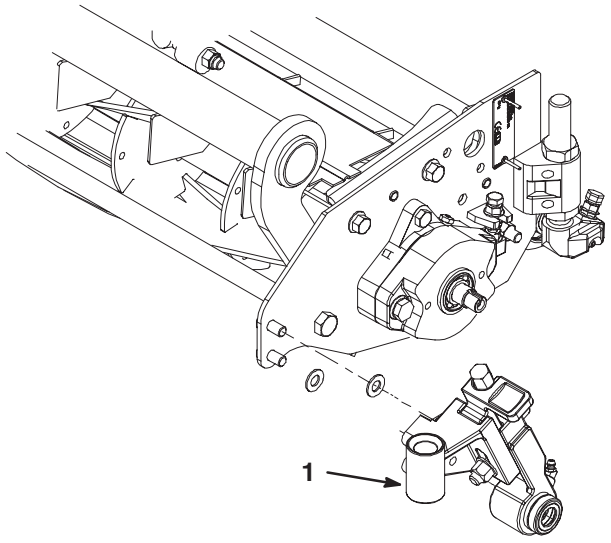

Figure 24

1. L.H. height of cut assembly

14. Position the edge of the alignment tool onto the flat surfaces of the drive assembly and the LH height of cut assembly, as shown in figure 25. If the surfaces do not align, the LH height of cut assembly can be adjusted in or out by adding or substituting .406 ID x .812 OD x .030 thk. washers. The surfaces should be aligned to within .030 in.

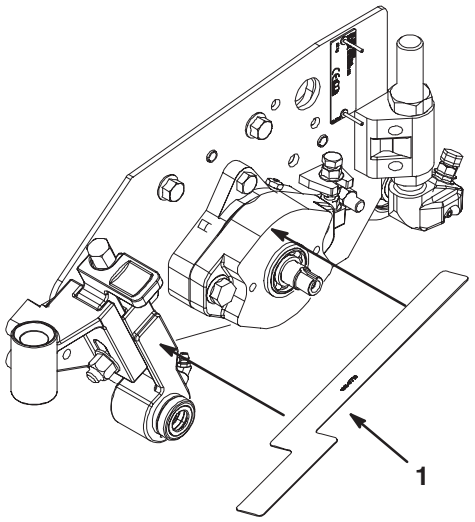

Figure 25

1. Alignment tool

15. Remove the cover mounting bolts, washers, flange nuts, idler pulley and the guard plate w/bolt from the existing brush plate (Fig. 26). and install them on the new brush plate (Fig. 27). Leave the guard plate bolt (Fig. 27) loose for adjustment later.

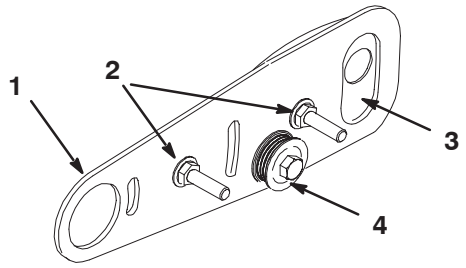

Figure 26

1. Existing brush plate
2. Cover mounting bolts, washers and flange nuts
3. Guard plate
4. Idler pulley

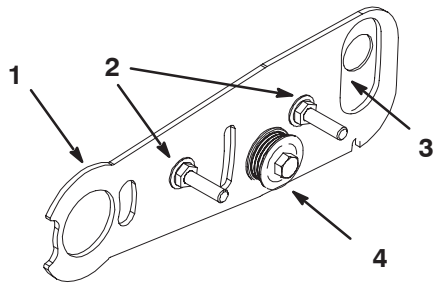

Figure 27

1. New brush plate
2. Cover mounting bolts, washers and flange nuts
3. Guard plate
4. Idler pulley

16. Remove the (2) tap bolts, spacers, nuts, idler assembly and spring from the groomer plate (Fig. 28). and install them on the groomer plate to be used with the roller brush (Fig. 29).

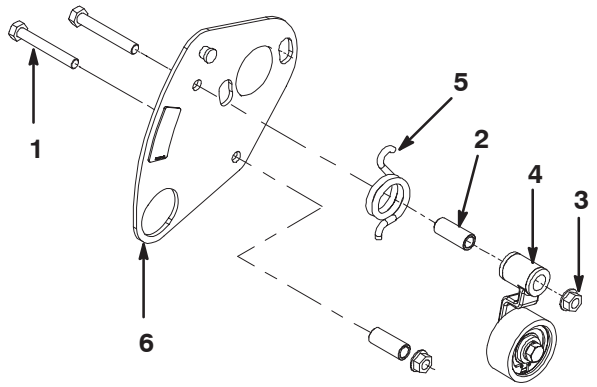

Figure 28

1. Tap bolt
2. Spacer
3. Nut
4. Idler assembly
5. Spring
6. Groomer plate (Groomer only)

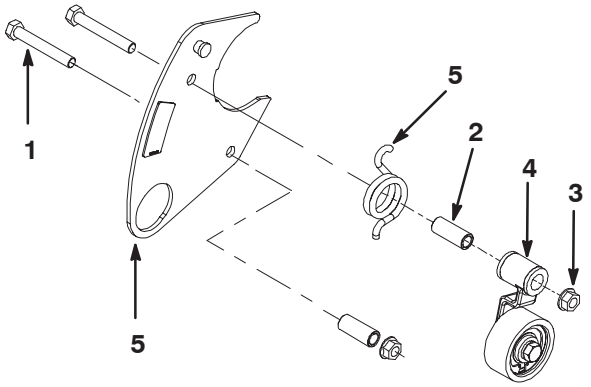

Figure 29

1. Tap bolt (2)
2. Spacer (2)
3. Nut (2)
4. Idler assembly
5. Spring
6. Groomer plate (Groomer and roller brush)

17. Mount the new brush plate assembly and the groomer plate to the drive assembly with the retaining plate and (2) .312 x .62" lg. flange head screws and spacers (Fig. 30). Also, mount the brush plate to the threaded spacer with a .312 x .62" lg. flange head screw. Make sure the brush plate is positioned over the roller brush shaft.

18. Insert the square key into the key way on the roller brush shaft (Fig. 30).

19. Slide pulley onto key and end of roller brush shaft (Fig. 30).

20. Apply 242–Loctite (blue) to threads of 5/16–18 x 5/8" lg. flange bolt. Secure pulley to shaft with bolt and torque to 15 to 19 ft.–lbs. (1/2" wrench) (Fig. 30).

Note: Hold roller shaft with a 7/16" wrench to tighten pulley bolt.

21. Secure the groomer plate assembly to the height of cut assembly with a retaining ring (Fig. 30).

22. Tighten the capscrews securing the L.H. height of cut assembly to the left end of the cutting unit (Fig. 24). Torque the capscrews to 35 ft–lbs.

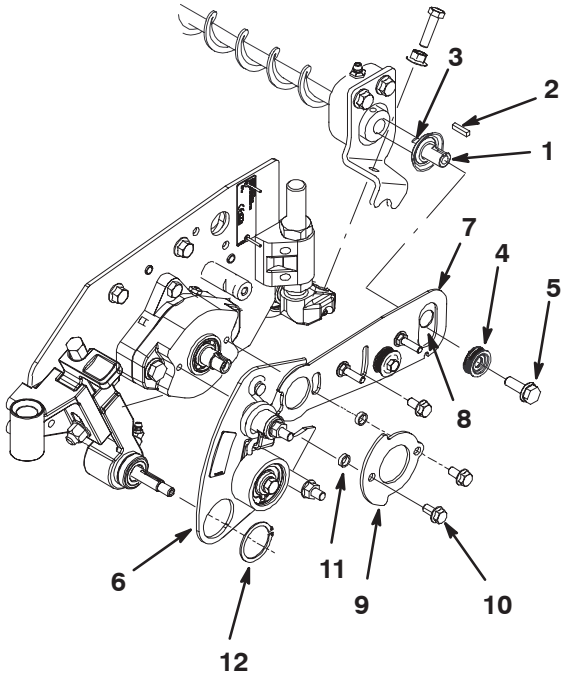

Figure 30

1. Roller shaft
2. Square key
3. Slot in shaft (7/16" wrench)
4. Pulley
5. Flange bolt
6. LH groomer plate
7. Brush plate
8. Guard plate
9. Retaining plate
10. Flange head capscrew
11. Spacer
12. Retaining ring

23. Insert a seal guard onto each end of the groomer shaft assembly (Fig. 31). Apply a film of grease onto the seal lip. The seal guards are to be positioned so they curve toward each end of the shaft.

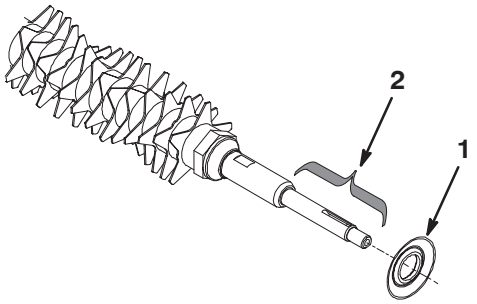

Figure 31

1. Seal guard
2. Grease here (2)

24. Apply a film of grease to each end of the groomer shaft and onto the seals in the L.H. height of cut assembly

25. Carefully insert the key way end of the groomer shaft into the LH height of cut assembly until the shaft **clicks** into position (Fig. 32).Take care not to damage the seals in the height of cut assembly.

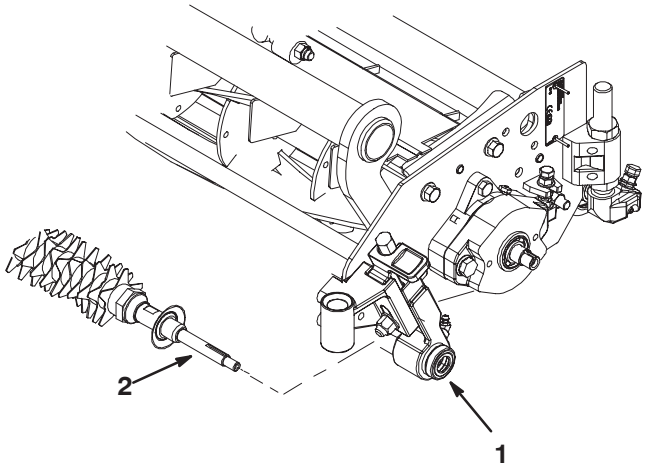

Figure 32

1. L.H. height of cut assembly
2. Groomer shaft

26. Apply a film of grease onto the seals in the R.H. height of cut assembly. Insure that the O–ring is in position on the RH end of the groomer shaft.

27. Carefully insert the RH height of cut assembly onto the RH end of the groomer shaft until the shaft **clicks** into position (Fig. 33).Take care not to damage the seals in the height of cut assembly.

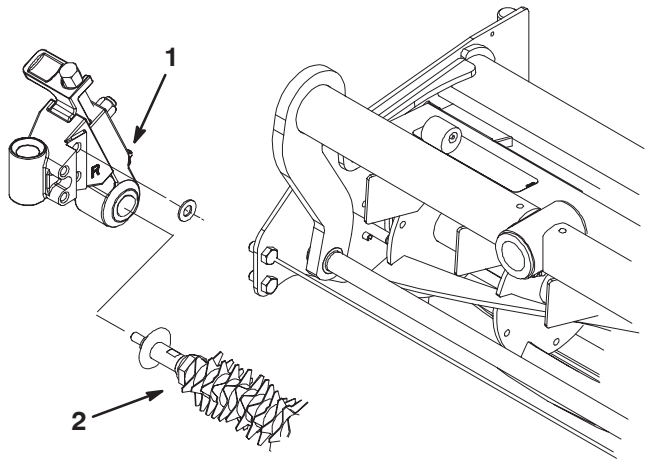

Figure 33

1. R.H. height of cut assembly
2. Groomer

28. Mount the RH height of cut assembly to the right end of the cutting unit with the (2) 3/8–16 x .75" lg capscrews and (2) .406 ID x .812 OD x .065 thk. washers (Fig. 33).

Note: If additional washers were used to shim out the LH height of cut assembly, washers are not required on the RH height of cut assembly. If additional washers were not used on the LH side they should be used on the RH side. Torque the RH height of cut assembly mounting capscrews to 35 ft–lbs.

29. Slide the seal guards against the height of cut assembly bearing housings on both ends of the groomer shaft (Fig. 34).

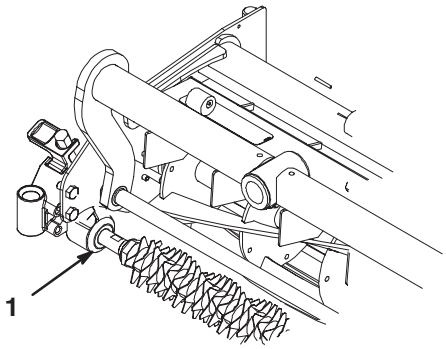

Figure 34

1. Seal guard

30. Mount the drive pulley to the drive assembly shaft with a .125 x .312 square key and a .312 x .62" lg. flange head screw (Fig. 35). Apply Loctite 242 to the threads of the screw. Torque the capscrew to 200 in–lbs.

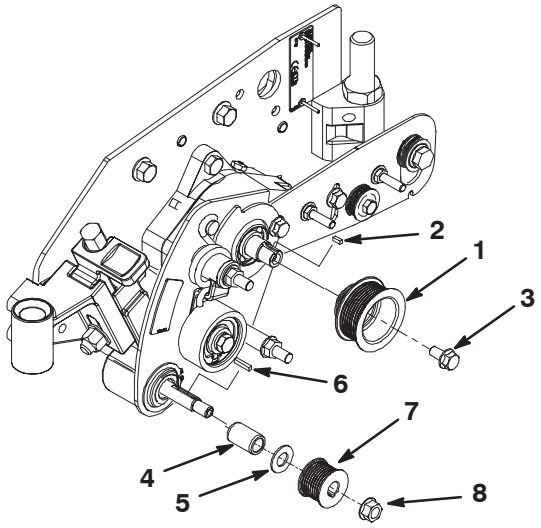

Figure 35

1. Drive pulley
2. Square key
3. Flange head capscrew
4. Pulley spacer
5. Washer
6. Square key
7. Driven pulley
8. Flange nut

---

31. Apply a film of grease to the pulley spacer (Fig. 35) and carefully insert it into the L.H. height of cut assembly Take care not to damage the seals in the height of cut assembly.

32. Insert the .474 ID x .938 OD x .065" thk. washer onto the groomer shaft (Fig. 35).

33. Loosely install the driven pulley to the height of cut assembly shaft with a square key and a 3/8–16 flange head nut (Fig. 35).

34. Using the alignment tool, check the alignment of the drive and driven pulleys (Fig. 36). If the pulleys do not align, the driven pulley can be adjusted in or out by adding or substituting .474 ID x .938 OD x .030 thk. washers. The pulleys should be aligned to within .015 in. After the pulleys are aligned, torque the nut to 25 ft–lbs.

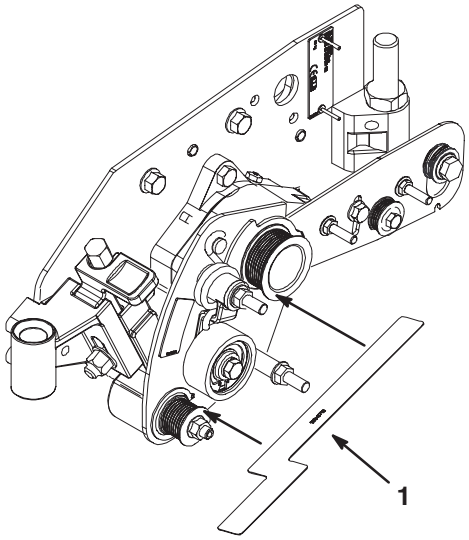

Figure 36

1. Alignment tool

---

35. Using the alignment tool, (Fig. 37). position the roller brush assembly to align the drive pulley with brush drive and idler pulleys.

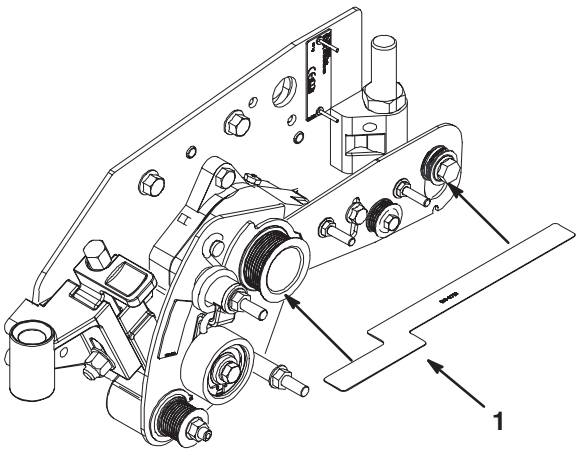

Figure 37

1. Alignment tool

Note: The roller brush idler pulley can be adjusted out, if required, by adding .406 ID x .812 OD x .035 or.065 thk. washers under the existing spacer.

36. Lock the driven pulley into place. Refer to the Roller Brush Installation Instructions.

37. Install the brush belt around the rear drive pulley, brush pulley and idler pulley (Fig. 38).

38. Using about 5 lbs of force, push down on the rear end of brush plate to initially set belt tension. Tighten the 5/16” flange bolts securing the brush plate to the drive housing and threaded spacer (Fig. 38).

39. Check belt tension. Correct belt tension should have approximately 0.25” deflection at the center of the belt with 2 lbs of force applied (Fig. 38).

40. Adjust the guard plate so that it covers the hole in the brush plate and does not contact rear roller brush shaft (Fig. 38). Tighten bolt and flange nut securing guard plate.

Note: Proper installation of guard plate and excluder seal will help prevent debris and water from enter pulley area and preventing premature wear of components.

41. Install the groomer belt around the drive and driven pulleys and under the idler pulley (Fig. 38).

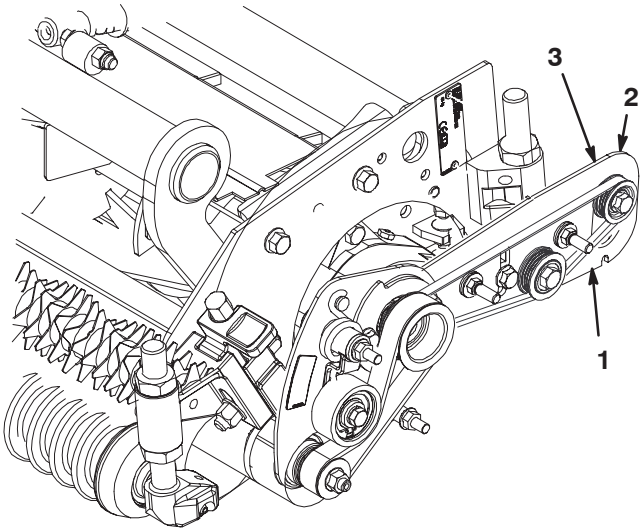

Figure 38

1. Brush plate
2. Press down here to tension belt
3. Guard plate

42. Insert a washer onto each brush cover mounting bolt (Fig. 39).

43. Slide the brush belt cover onto the mounting bolts and secure with (2) washers and lock nuts (Fig. 39). **Do not overtighten nuts as damage to cover may occur.**

44. Insert the groomer drive cover onto the tap bolts and secure with (2) 5/16–18 flange nuts (Fig. 39). **Do not overtighten nuts as damage to cover may occur.**

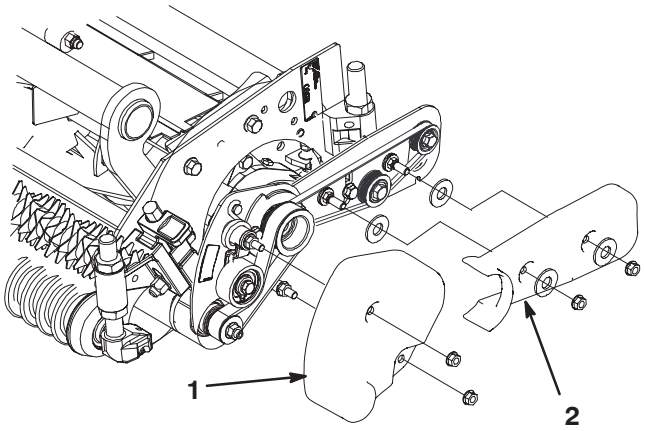

Figure 39

1. Drive cover
2. Brush cover

45. Install the front roller and set the desired height of cut.

46. Fill each reel bearing housing with grease (Fig. 40). Excess grease will purge between the inboard seals and the seal guards.

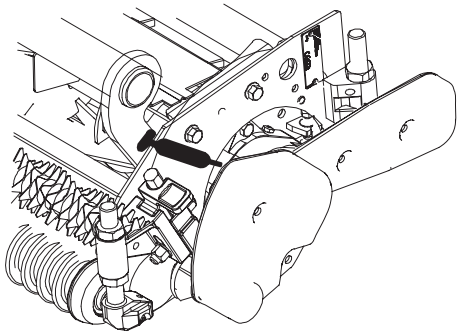

Figure 40

47. Grease each of the groomer shaft bearings (2 or 3 pumps maximum) (Fig. 41). Do not over-grease as excess grease may cause seal failure. Wipe off any excess grease.

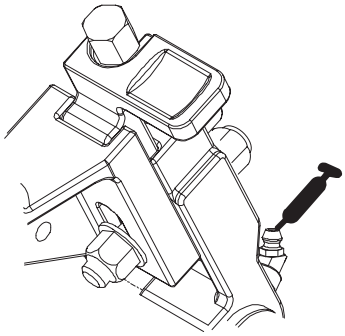

Figure 41

Note: After greasing groomer bearings, operate groomer for 30 seconds, stop machine and wipe excess grease from groomer shaft and seals.

Important It is recommended that the Lynch pin (Fig. 42) be installed on the front center cutting unit to prevent the covers from contacting each other. Also, it is recommended that the Lynch pin be installed on all the rear cutting units on the Reelmaster 5500 series.

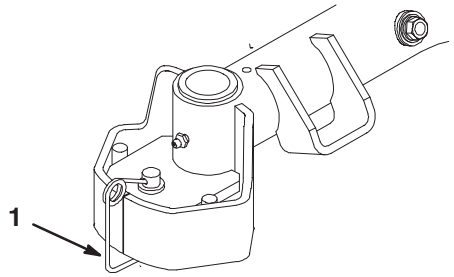

Figure 42

1. Lynch pin 2.

Important When a brush kits is installed, make sure the recommended spacers and chains are properly installed per the installation instructions included with the Roller Brush Kit.

Adjusting the Turf Compensation Spring

The Turf Compensation Spring (Fig. 43), connecting carrier frame to cutting unit, controls the amount of fore-aft rotation available, as well as the amount of ground clearance in transport and turn around.

The Turf Compensation Spring also transfers weight from the front to rear roller. This helps to reduce a wave pattern in the turf, also known as bobbing.

Important Make spring adjustments with cutting unit mounted to traction unit and lowered to shop floor. Refer to Traction Unit Operator's Manual for mounting instructions.

1. Tighten lock nut on rear of spring rod until the gap (C) between rear of spring bracket and front of washer is 1" (26 mm) (Fig. 43).
2. Tighten hex nuts on front end of spring rod until the compressed length (A) of spring is 8" (203 mm) (Fig. 43).

   Note: When cutting rough or undulating turf, increase the compressed length (A) of the spring to 8-1/2" (216 mm) and the gap (C) between the rear of the spring bracket and the front of the washer to 1-1/2" (39 mm) (Fig. 43).

   Note: As the compressed spring length (A) **decreases**, the weight transfer from the front roller to the rear roller **increases** and the carrier frame/cutting unit rotation angle (B) **decreases**.

   Note: As the gap (C) between the spring bracket and the washer **increases**, the cutting unit ground clearance **decreases** and the carrier frame/cutting unit rotation angle (B) **increases**.

Note: When cutting under normal conditions, the compressed spring length (A) can be set as short as 7–1/8" (181 mm) and the gap (C) can be set to 1-1/2" (39 mm) to compensate for the additional weight of the groomer attachment.

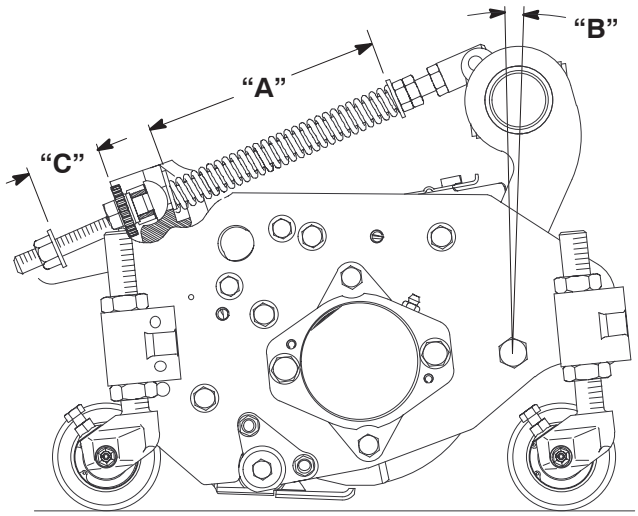

Figure 43

Operation

Grooming is performed above the soil level. Grooming promotes vertical growth of the grass by cutting runners (stolons), removing thatch, and encouraging denser growth and deeper rooting (Fig. 44).

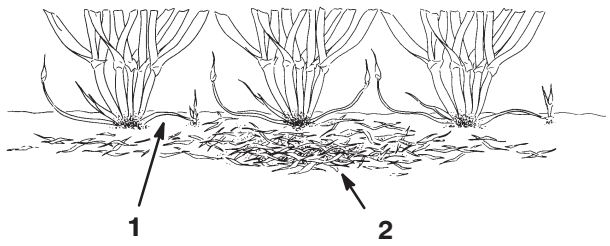

Figure 44

1. Grass runners
2. Thatch

Grooming is similar to verti-cutting in its runner cutting action. However, grooming blades should never penetrate the soil like verti-cutting or dethatching. Groomer blades are spaced closer together and are used more often than verti-cutters so that they are more effective in cutting runners and removing thatch. Verti-cutters are used primarily for renovation while groomers are used for ongoing upkeep.

It is difficult to make precise recommendations on the use of grooming reels because so many variables affect the performance of grooming, including:

- The time of the year (i.e., the growing season) and weather pattern
- The general condition of each fairway
- The frequency of grooming/cutting—both how many cuttings per week and how many passes per cutting
- The height of cut setting on the main reel
- The height/depth setting on the grooming reel
- How long the grooming reel has been in use
- The type of grass
- The overall management program (i.e. irrigation, fertilizing, spraying, coring, over seeding, etc.)
- The traffic on the fairway
- Stress periods (i.e., high temperatures, high humidity, unusually high traffic)

Note: The practice of changing the direction of cut each time the fairway is cut should be continued when a groomer is used. This rotation will enhance the effects of the grooming.

Adjusting the Depth/Height

1. Park the machine on a clean and level surface, lower the cutting units completely to the ground, stop the engine, engage the parking brake and remove the key from the ignition switch.
2. Make sure the rollers are clean and cutting reel is set to the desired height–of–cut (see Cutting Unit Operator's Manual).
3. Loosen the lock nut that retains the groomer depth (Fig. 45).

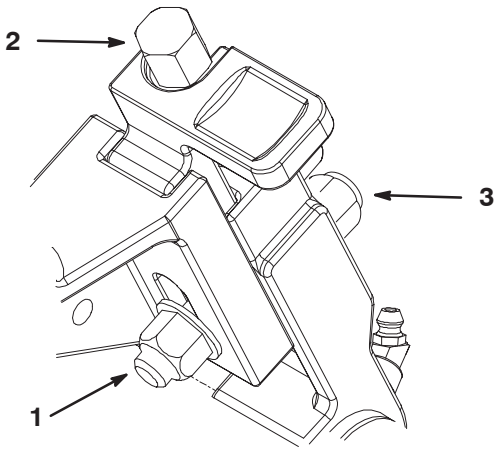

Figure 45

1. Locknut for quick raise
2. Height adjustment screw
3. Locknut for setting grooming depth

Note: Improper or over–aggressive use of the groomer reel (i.e. too deep or too frequent grooming) may cause unnecessary stress of the turf leading to severe turf damage. Use the groomer cautiously.

4. Adjust the groomer to the Engaged position at the bottom of the slot. Tighten the quick raise locknut.
5. On one end of the groomer reel, measure the distance from the lowest tip of the groomer blade to the working surface. Turn height adjustment screw (Fig. 45) to raise or lower the groomer blade tip to the desired height.
6. Repeat step 4 on the opposite end of the groomer. Then, recheck the setting on the first side of groomer. Height setting on both ends of the groomer should be identical.
7. Tighten the (2) lock nuts locking the adjustment (Fig. 45).

Testing the Groomer Performance

Important Improper or over-aggressive use of the grooming reel (i.e., too deep or too frequent grooming) may cause unnecessary stress on the turf leading to severe damage. Use the groomer cautiously.

Danger

Contact with the reels or other moving parts can result in personal injury.

- **Before making any adjustments to the cutting units, disengage the reels, set the parking brake, stop the engine, and remove the ignition key.**
- **Keep fingers, hands, and clothing away from the reels or other moving parts.**

It is important to determine the performance of the groomer before putting it into regular use

We suggest that a formal test procedure be used. The following is a practical way of determining the proper height/depth setting:

1. Set the main cutting reels to the height of cut that would normally be used without the grooming reel. Use a Wiehle roller on the front and a full roller on the rear.
2. Set each of the grooming reels to the desired depth setting.
3. Examine the test area and determine if the groomed areas gives the desired results. If not, increase or decrease the height/depth of the groomers, and make another test pass. The amount of grass removed is a key indicator in determining the height/depth setting of the grooming reel.

Check the test area 2 or 3 days after the first grooming for general condition/damage. If the groomed areas are turning yellow/brown, and the non-groomed areas are green, then the grooming was too aggressive.

Using Grass Baskets

The grooming reel will increase the amount of grass and thatch picked up. This means the grass baskets will have to be emptied more often.

The Grass Basket Mounting Kit, Part No. 108–6743 and Basket, Part No. 107–9518 are required when grass baskets are required with the groomers installed.

Also, it is required that Basket Tipper Kits, Part No. 100–9945 (1 ea.) be installed on all Reelmaster 5500 series traction units if not currently equipped with baskets.

Maintenance

Cleaning

Hose off the grooming reel after using it. Do not direct the water stream directly at the groomer bearing seals. Do not permit the grooming reel to stand in water so that the components rust.

Clean under the belt cover(s) every 50 hours.

Lubrication

If the groomer is used every day, lubricate the 2 grease fittings weekly. Use a hand pump or grease gun (2 or 3 pumps maximum) (Fig. 46). Do not over-grease as excess grease may cause seal failure. Wipe off any excess grease.

Note: After greasing groomer bearings, operate groomer for 30 seconds, stop machine and wipe excess grease from groomer shaft and seals.

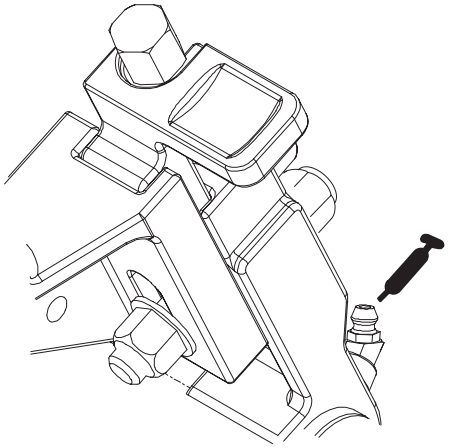

Figure 46

Inspecting the Blades

Inspect the grooming reel blades frequently for damage and wear. Bent blades may be straightened with a pliers. Either replace worn blades or reverse the blades on the shaft to put the sharpest blade edge forward (Fig. 47). When inspecting the blades, check to see that the right and left blade shaft end nuts are tight.

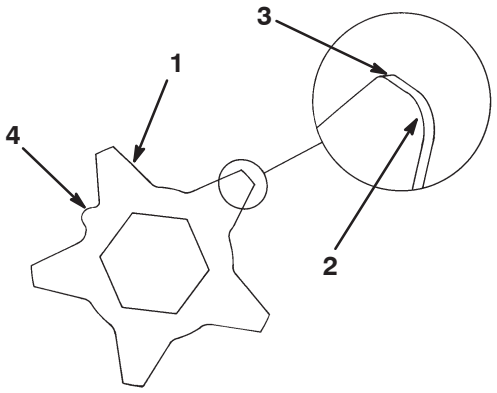

Figure 47

1. Grooming blade
2. Dull (rounded) edge
3. Sharp edge
4. Location mark

Note: Because the groomer may introduce more debris (i.e., dirt and sand) into the cutting unit than what the reel would normally be exposed to, the bedknife and main reel should be checked for wear more frequently. This is especially important in sandy soil.

Important Backlapping at the incorrect reel speed may loosen and strip the drive pulley threads. Refer to the Cutting Unit Operator's Manual for backlapping procedure.

Important When performing cutting unit maintenance, rotate cutting unit up onto front roller and carrier frame to prevent damage to rear roller brush, if applicable.

Note: Groomer blades, idler bearing, and belt(s) are considered consumable items.

Optional Equipment

Wiehle Roller Scraper (one per cutting unit)	Part No. 108–0605
Gauge bar	Part No. 108–6715

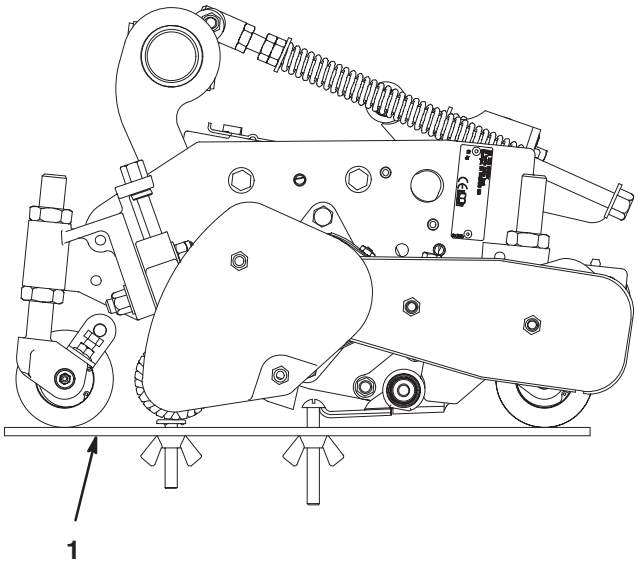

Figure 48

1. Gauge bar