Form No. 3356-911 Rev B

TORO®

Count on it.

Operator's Manual

Workman® 1110 Utility Vehicle

Model No. 07264—Serial No. 270000001 and Up

Model No. 07264TC—Serial No. 270000001 and Up

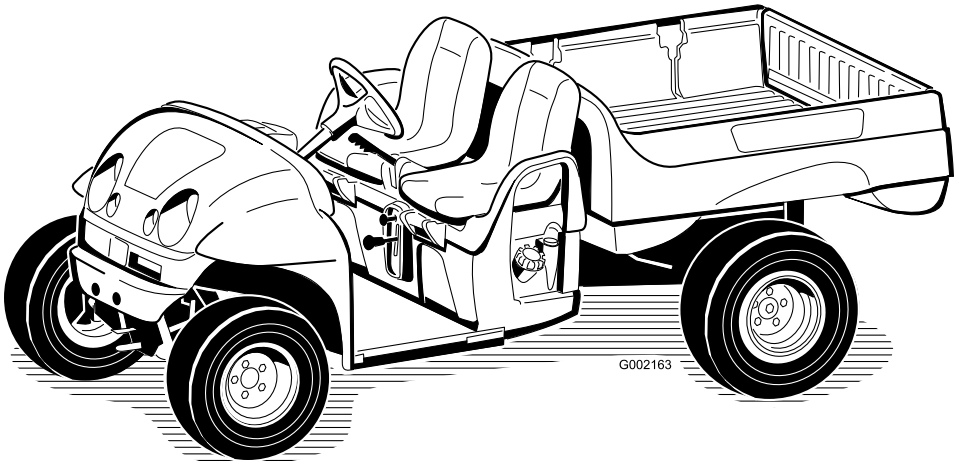

CE

Register your product at www.Toro.com

Original Instructions (EN)

Warning

CALIFORNIA
Proposition 65 Warning

The engine exhaust from this product contains chemicals known to the State of California to cause cancer, birth defects, or other reproductive harm.

Important: This engine is not equipped with a spark arrester muffler. It is a violation of California Public Resource Code Section 4442 to use or operate the engine on any forest-covered, brush-covered, or grass-covered land. Other states or federal areas may have similar laws.

This spark ignition system complies with Canadian ICES-002

The enclosed Engine Owner's Manual is supplied for information regarding the US Environmental Protection Agency (EPA) and the California Emission Control Regulation of emission systems, maintenance, and warranty. Replacements may be ordered through the engine manufacturer.

Introduction

Read this information carefully to learn how to operate and maintain your product properly and to avoid injury and product damage. You are responsible for operating the product properly and safely.

You may contact Toro directly at www.Toro.com for product and accessory information, help finding a dealer, or to register your product.

Whenever you need service, genuine Toro parts, or additional information, contact an Authorized Service Dealer or Toro Customer Service and have the model and serial numbers of your product ready. Figure 1 identifies the location of the model and serial numbers on the product. Write the numbers in the space provided.

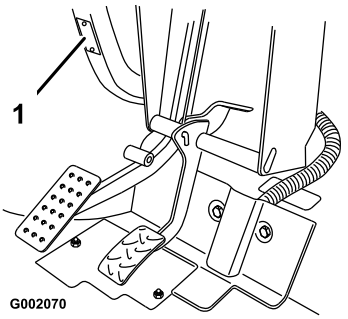

Figure 1

1. Model and serial number location

Model No. _____

Serial No. _____

This manual identifies potential hazards and has safety messages identified by the safety alert symbol (Figure 2), which signals a hazard that may cause serious injury or death if you do not follow the recommended precautions.



Figure 2

1. Safety alert symbol

This manual uses 2 other words to highlight information. **Important** calls attention to special mechanical information and **Note** emphasizes general information worthy of special attention.

© 2005—The Toro® Company
8111 Lyndale Avenue South
Bloomington, MN 55420

Contact us at www.Toro.com.
Printed in the USA.
All Rights Reserved

Contents

Introduction 2
Safety 4
Safe Operating Practices 4
Before Operating 4
Operation 5
Maintenance 8
Sound Pressure 8
Vibration 8
Safety and Instructional Decals 9
Setup 11
1 Installing the Wheels 11
2 Installing the Steering Wheel 12
3 Installing the Bumper 12
4 Installing the Seats 13
5 Installing the Hitch 13
6 Installing the Cargo Box 14
7 Activating the Battery 15
8 Adjusting the Front Wheel Toe-in 15
9 Reading the Manual and Viewing the Safety Video 16
Product Overview 18
Controls 18
Specifications 21
Operation 22
Think Safety First 22
Pre-Starting Checks 22
Checking the Engine Oil 22
Checking the Brake Fluid Level 22
Checking the Tire Pressure 22
Adding Fuel 23
Checking the Transmission Oil Level 24
Starting the Engine 24
Stopping the Vehicle 24
Parking the Vehicle 24
Operating the Cargo Box 24
Breaking in a New Vehicle 25
Loading the Cargo Box 26
Transporting the Vehicle 26
Towing the Vehicle 26
Towing a Trailer 27
Maintenance 28
Recommended Maintenance Schedule(s) 28
Daily Maintenance Checklist 29
Premaintenance Procedures 30
Maintaining the Vehicle under Special Operating Conditions 30
Jacking the Vehicle 30
Lubrication 30
Adding Grease 30
Engine Maintenance 31
Servicing the Air Cleaner 31
Servicing the Engine Oil 32
Servicing the Spark Plug 33
Fuel System Maintenance 33
Inspecting Fuel Lines and Connections 33
Replacing the Fuel Filter 33
Electrical System Maintenance 34
Replacing the Fuses 34
Replacing the Headlights 34
Servicing the Battery 34
Drive System Maintenance 36
Checking and Adjusting Neutral 36
Inspecting the Tires 37
Adjusting the Front Suspension 37
Adjusting Front Wheel Toe-In 38
Maintaining the Primary Drive Clutch 39
Changing the Transaxle Fluid 40
Cooling System Maintenance 40
Cleaning the Engine Cooling Areas 40
Brake Maintenance 41
Inspecting the Brakes 41
Checking the Brake Fluid Level 41
Adjusting the Parking Brake 41
Belt Maintenance 41
Servicing the Drive Belt 41
Adjusting the Starter Generator Belt 42
Cleaning 42
Washing the Vehicle 42
Storage 43
Schematics 44

Safety

Improper use or maintenance by the operator or owner can result in injury. To reduce the potential for injury, comply with these safety instructions and always pay attention to the safety alert symbol, which means **Caution**, **Warning**, or **Danger**—"personal safety instruction." Failure to comply with the instruction may result in personal injury or death.

Supervisors, operators, and service persons should be familiar with the following standards and publications (the material may be obtained from the address shown):

- Flammable and Combustible Liquids Code: ANSI/NFPA 30
- National Fire Protection Association:

  ANSI/NFPA #505; Powered Industrial Trucks, National Fire Prevention Association, Barrymarch Park, Quincy, Massachusetts 02269 U.S.A.
- ANSI/ASME B56.8 Personal Burden Carriers

  American National Standards Institute, Inc., 1430 Broadway, New York, New York 10018 U.S.A.
- SAE J2258 Light Utility Vehicle

  SAE International, 400 Commonwealth Drive, Warrendale, PA 15096-0001 U.S.A.
- ANSI/UL 558; Internal Combustion Engine Powered Industrial Trucks

  American National Standards Institute, Inc., 1430 Broadway, New York, New York 10018 U.S.A.

  or

  Underwriters Laboratories, 333 Pfingsten Road, Northbrook, Illinois 60062 U.S.A.

Safe Operating Practices



The Workman is an off-highway vehicle only and is not designed, equipped, or manufactured for use on public streets, roads, or highways.

Supervisor's Responsibilities

- Make sure that operators are thoroughly trained and familiar with the *Operator's Manual* and all labels on the vehicle.
- Be sure to establish your own special procedures and work rules for unusual operating conditions (e.g. slopes too steep for vehicle operation).

Before Operating

- Operate the machine only after reading and understanding the contents of this manual.
- Never allow children to operate the vehicle. Anyone who operates the vehicle should have a motor vehicle license.
- Never allow other adults to operate the vehicle without first reading and understanding the *Operator's Manual.* Only trained and authorized persons should operate this vehicle. Make sure that all operators are physically and mentally capable of operating the vehicle.
- This vehicle is designed to carry only you, the operator, and one passenger in the seat provided by the manufacturer. Never carry any other passengers on the vehicle.
- Never operate the vehicle when under the influence of drugs or alcohol. Even prescription drugs and cold medicines can cause drowsiness.
- Do not drive the vehicle when you are tired. Be sure to take occasional breaks. It is very important that you stay alert at all times.
- Become familiar with the controls and know how to stop the engine quickly.
- Keep all shields, safety devices, and decals in place. If a shield, safety device, or decal is malfunctioning, illegible, or damaged, repair or replace it before operating the machine.
- Always wear substantial shoes. Do not operate the machine while wearing sandals, tennis shoes or sneakers. Do not wear loose fitting clothing or jewelry which could get caught in moving parts and cause personal injury.
- Wearing safety glasses, safety shoes, long pants and a helmet is advisable and required by some local safety and insurance regulations.

- Avoid driving when it is dark, especially in unfamiliar areas. If you must drive when it is dark, be sure to drive cautiously, use the headlights, and even consider adding additional lights.
- Be extremely careful when operating around people. Always be aware of where bystanders might be.
- Before operating the vehicle, always check the designated areas of the vehicle that are stated in the pre-starting section of this manual. If something is wrong, do not use the vehicle. Make sure that the problem is corrected before the vehicle or attachment is operated.
- Since gasoline is highly flammable, handle it carefully.
  - Use an approved gasoline container.
  - Do not remove the cap from the fuel tank when the engine is hot or running.
  - Do not smoke while handling gasoline.
  - Fill the fuel tank outdoors, and fill it to about 1 inch (25 mm) below the top of the tank (the bottom of the filler neck). Do not overfill it.
  - Wipe up any spilled gasoline.

Operation

Engine exhaust contains carbon monoxide, which is an odorless, deadly poison that can kill you.

Do not run engine indoors or in an enclosed area.

- The operator and passenger should remain seated whenever the vehicle is in motion. The operator should keep both hands on the steering wheel whenever possible, and the passenger should use the hand holds provided. Keep your arms and legs within the vehicle body at all times.
- Drive slower and turn less sharply when you are carrying a passenger. Remember your passenger may not be expecting you to brake or turn and may not be ready.
- Always watch out for and avoid low overhangs such as tree limbs, door jambs, and over-head walkways. Make sure there is enough room over head to easily clear the vehicle and your head.
- Always shift into neutral and apply the parking brake before leaving an idling vehicle, or else the vehicle may creep.
- Failure to operate the vehicle safely may result in an accident, tip over of the vehicle, and serious injury or death. Drive carefully. To prevent tipping or loss of control:
  - Use extreme caution, reduce speed, and maintain a safe distance around sand traps, ditches, creeks, ramps, unfamiliar areas, or any areas that have abrupt changes in ground conditions or elevation.
  - Watch for holes or other hidden hazards.
  - Use extra caution when operating the vehicle on wet surfaces, in adverse weather conditions, at higher speeds, or with a full load. Stopping time and distance will increase with a full load.
  - Avoid sudden stops and starts. Do not go from reverse to forward or forward to reverse without first coming to a complete stop.
  - Slow down before turning. Do not attempt sharp turns or abrupt maneuvers or other unsafe driving actions that may cause a loss of vehicle control.
  - When dumping, do not let anyone stand behind the vehicle and do not dump the load on anyone's feet. Release the tailgate latches from the side of the box, not from behind.
  - Only operate the vehicle when the cargo box is down and latched.
  - Before backing up, look to the rear and ensure that no one is behind you. Back up slowly.
  - Watch out for traffic when you are near or crossing roads. Always yield the right of way to pedestrians and other vehicles. This vehicle is not designed for use on streets or highways. Always signal your turns or stop early enough so that other people know what you plan to do. Obey all traffic rules and regulations.
  - The electrical and exhaust systems of the vehicle can produce sparks capable of

igniting explosive materials. Never operate the vehicle in or near an area where there is dust or fumes in the air which are explosive.

– If you are ever unsure about safe operation, stop work and ask your supervisor.

- Do not touch the engine or muffler while the engine is running or soon after it has stopped. These areas may be hot enough to cause burns.
- If the machine ever vibrates abnormally, stop immediately, wait for all motion to stop, and inspect the vehicle for damage. Repair all damage before commencing operation.
- Before getting off of the seat:
  1. Stop the movement of the machine.
  2. Set the parking brake.
  3. Turn the ignition key to Off.
  4. Remove the ignition key.

  Note: If the vehicle is on an incline, block the wheels after getting off of the vehicle.

Braking

- Slow down before you approach an obstacle. This gives you extra time to stop or turn away. Hitting an obstacle can damage the vehicle and its contents. More important, it can injure you and your passenger.
- Gross Vehicle Weight (GVW) has a major impact on your ability to stop and/or turn. Heavy loads and attachments make a vehicle harder to stop or turn. The heavier the load, the longer it takes to stop.
- Decrease the vehicle speed if the cargo box has been removed and there is no attachment on the vehicle. The braking characteristics change and fast stops may cause the rear wheels to lock up, which may affect the control of the vehicle.
- Turf and pavement are much more slippery when they are wet. It can take 2 to 4 times as long to stop on wet surfaces as on dry surfaces. If you drive through standing water deep enough to get the brakes wet, they will not work well until they are dry. After driving through water, you should test the brakes to make sure they work properly. If they do not, drive slowly while putting light pressure on the brake pedal. This will dry the brakes out.

Operating on Hills

Operating the vehicle on a hill may cause tipping or rolling of the vehicle, or the engine may stall and you could lose headway on the hill. This could result in personal injury.

- **Do not accelerate quickly or slam on the brakes when backing down a hill, especially with a load.**
- **If the engine stalls or you lose headway on a hill, slowly back straight down the hill. Never attempt to turn the vehicle around.**
- **Operate the vehicle slowly on a hill and use caution.**
- **Avoid turning on a hill.**
- **Reduce your load and the speed of the vehicle.**
- **Avoid stopping on hills, especially with a load.**

These extra cautions need to be taken when operating the vehicle on a hill:

- Slow down before starting up or down a hill.
- If the engine stalls or you begin to lose headway while climbing a hill, gradually apply the brakes and slowly back straight down the hill.
- Turning while traveling up or down hills can be dangerous. If you have to turn while on a hill, do it slowly and cautiously. Never make sharp or fast turns.
- Heavy loads affect stability. Reduce the weight of the load and your speed when operating on hills or if the load has a high center of gravity. Secure the load to prevent it from shifting and take extra care when hauling loads that shift easily (liquid, rock, sand, etc.).
- Avoid stopping on hills, especially with a load. Stopping while going down a hill will take longer than stopping on level ground. If the vehicle must be stopped, avoid sudden speed changes, which may initiate tipping or rolling of the vehicle. Do not slam on the brakes

when rolling backward, as this may cause the vehicle to overturn.

- We strongly recommend installing the optional ROPS Kit when operating on hilly terrain.

Operating on Rough Terrain

Reduce speed and load when operating on rough terrain, uneven ground, and near curbs, holes, and other sudden changes in terrain. Loads may shift, causing the vehicle to become unstable.

We strongly recommend installing the optional ROPS Kit when operating on rough terrain.

Sudden changes in terrain may cause abrupt steering wheel movement, possibly resulting in hand and arm injuries.

- **Reduce your speed when operating on rough terrain and near curbs.**
- **Grip the steering wheel loosely around the perimeter. Keep your hands clear of the steering wheel spokes.**

Loading and Dumping

The weight and position of the cargo and passenger can change the vehicle center of gravity and vehicle handling. To avoid loss of control and personal injury, follow these guidelines:

- Do not carry loads which exceed the load limits described on the vehicle weight label; refer to Specifications in Product Overview, page 18, for vehicle weight limits. The load rating is for level surfaces only.
- Reduce the weight of the load when operating on hills and rough terrain to avoid tipping or overturning of the vehicle.
- Reduce the weight of the load if the center of gravity is high. Items such as bricks, fertilizer, or landscape timbers stack higher in the box. The higher a load is stacked, the more likely the vehicle is to tip over. Distribute the load as low as possible, making sure that the load does not affect rear visibility.
- Position the weight of the load evenly from side to side. If you position the load toward one of the sides, the vehicle is more likely to tip over while turning.
- Position the weight of a load evenly from front to back. If you position the load behind the rear axle, it will reduce the weight on the front wheels. This may result in a loss of steering control or cause the vehicle to tip over on hills or bumpy terrain.
- Use extra caution if the load exceeds the dimensions of the box and when handling off-center loads that cannot be centered. Keep loads balanced and secure to prevent them from shifting.
- Always secure loads so that they do not shift. If a load is not secured, or you are transporting a liquid in a large container such as a sprayer, the load can shift. This shifting happens most often while turning, going up or down hills, suddenly changing speeds, or while driving over rough surfaces. Shifting loads can cause the vehicle to tip over.

The weight of the box may be heavy. Hands or other body parts could be crushed.

- **Keep hands and other body parts clear when lowering the box.**
- **Do not dump materials on bystanders.**

- Never dump a loaded cargo box while the vehicle is sideways on a hill. The change in weight distribution may cause the vehicle to overturn.
- When operating with a heavy load in the cargo box, reduce your speed and allow for sufficient braking distance. Do not suddenly apply the brakes. Use extra caution on slopes.
- Be aware that heavy loads increase your stopping distance and reduce your ability to turn quickly without tipping over.
- The rear cargo space is intended for load carrying purposes only, not for passengers.
- Never overload your vehicle. The decal (located on the rear frame) shows load limits for the vehicle. Never overload the attachments or exceed the Gross Vehicle Weight (GVW).

Maintenance

- Only qualified and authorized personnel shall be permitted to maintain, repair, adjust, or inspect the vehicle.
- Before servicing or making adjustments to the machine, stop the engine, set the parking brake, and remove the key from the ignition to prevent someone from accidentally starting the engine.
- To make sure that the entire machine is in good condition, keep all nuts, bolts, and screws properly tightened.
- To reduce the potential for fire, keep the engine area free of excessive grease, grass, leaves, and accumulation of dirt.
- Never use an open flame to check the level or leakage of fuel or battery electrolyte.
- If the engine must be running to perform a maintenance adjustment, keep your hands, feet, clothing, and any parts of your body away from the engine and any moving parts. Keep everyone away.
- Do not use open pans of fuel or flammable cleaning fluids for cleaning parts.
- Do not adjust the ground speed governor. To ensure safety and accuracy, have an Authorized Toro Distributor check the ground speed.
- If major repairs are ever needed or assistance is required, contact an Authorized Toro Distributor.
- To be sure of optimum performance and safety, always purchase genuine Toro replacement parts and accessories. Replacement parts and accessories made by other manufacturers could be dangerous. Altering this vehicle in any manner that may affect vehicle operation, performance, durability, or its use, may result in injury or death. Such use could void the product warranty.

Sound Pressure

This unit has a maximum sound pressure level at the operator's ear of 78 dBA, based on measurements of identical machines per EN 11094.

Vibration

This unit does not exceed a hand/arm vibration level of 2.5 m/s^2, based on measurements of identical machines per EN 1033.

This unit does not exceed a whole body vibration level of 0.5 m/s^2, based on measurements of identical machines per EN 1032.

Safety and Instructional Decals

Safety decals and instructions are easily visible to the operator and are located near any area of potential danger. Replace any decal that is damaged or lost.

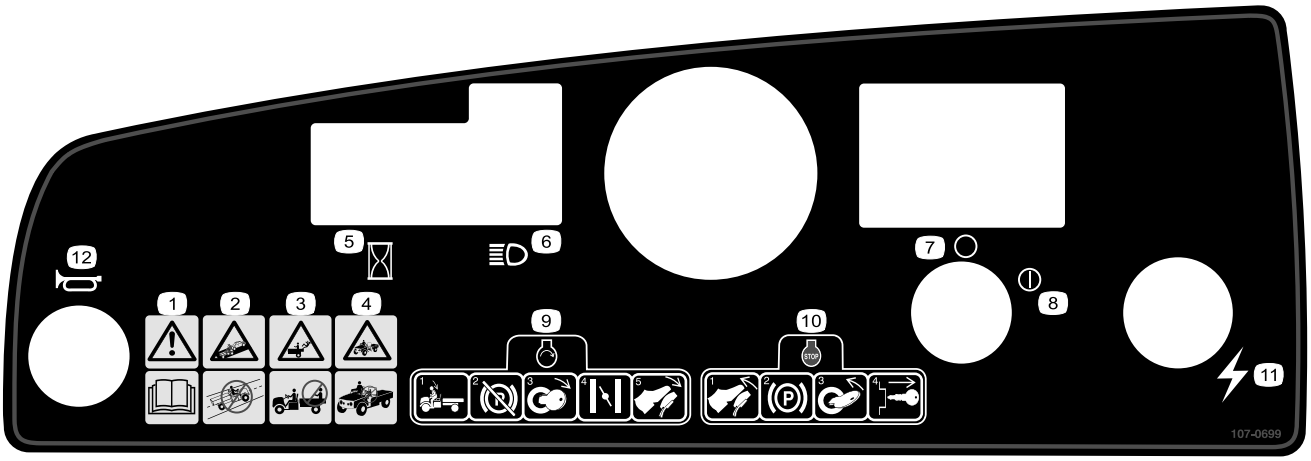

107–0699

1. Warning—read the *Operator's Manual*.
2. Collision hazard—do not operate the vehicle on public streets, roads, or highways.
3. Falling hazard—do not carry passengers in the cargo bed.
4. Falling hazard—do not allow children to operate the vehicle.
5. Hour meter
6. Headlights
7. Ignition—Off
8. Ignition—On
9. To start the engine, sit on the operator's seat, release the parking brake, turn the ignition key on, pull the choke lever out (if needed), and press the accelerator pedal.
10. To stop the engine, release the accelerator pedal, set the parking brake, turn the ignition key off, and remove the ignition key.
11. Electrical power (power point)
12. Horn

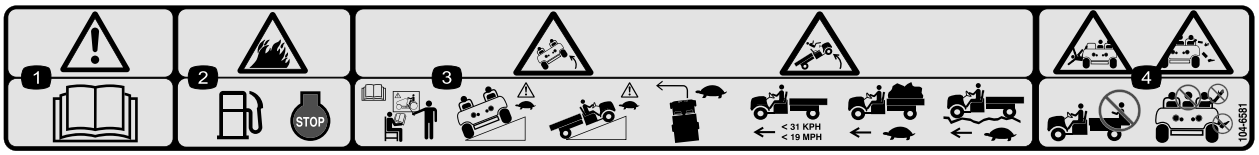

104–6581

1. Warning—read the *Operator's Manual*.
2. Fire hazard—before fueling, stop the engine.
3. Tipping hazard—receive training before operating the machine, use caution and drive slowly while on slopes; drive slowly when turning, keep the vehicle speed under 19 MPH (31 km/h) when carrying a full or heavy load and when driving on rough terrain .
4. Falling and arm/leg injury hazards—do not carry passengers in the cargo bed and keep arms and legs inside of the vehicle at all times.

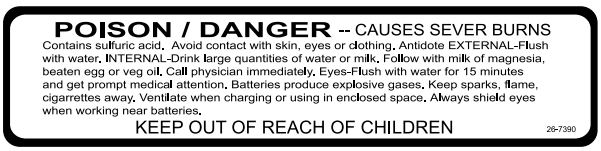

26-7390

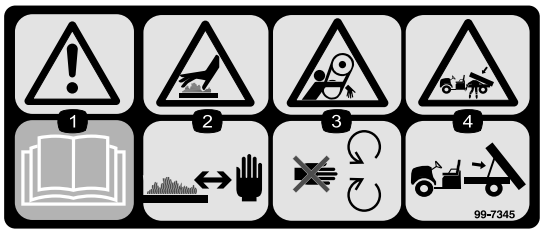

99–7345

1. Warning—read the *Operator's Manual*.
2. Hot surface/burn hazard—stay a safe distance from the hot surface.
3. Entanglement hazard, belt—stay away from moving parts
4. Crushing hazard, cargo box—use the prop rod to support the cargo bed

---

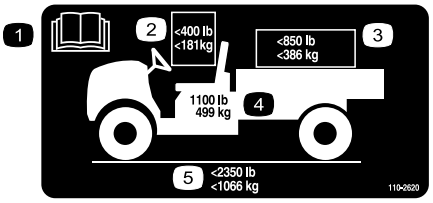

110–2620

1. Read the *Operator's Manual*.
2. The maximum combined operator and passenger weight is 400 lb (181 kg).
3. The maximum cargo weight is 850 lb (386 kg).
4. The base weight of the vehicle is 1100 lb (499 kg).
5. The maximum gross vehicle weight is 2350 lb (1066 kg).

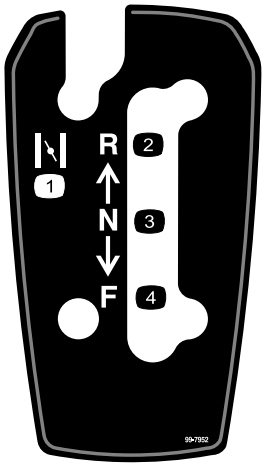

99–7952

1. Choke
2. Reverse
3. Neutral
4. Forward

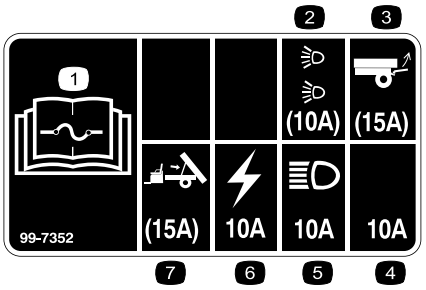

99–7352

1. Read the *Operator's Manual* for information on fuses.
2. 10 amp. fuse for the optional Road Light Kit
3. 15 amp. fuse for the optional Rear Lift Kit
4. 10 amp. fuse—open
5. 10 amp. fuse for the headlights
6. 10 amp. fuse for the ignition system
7. 15 amp. fuse for the optional Electric Bed Lift Kit



99–7954

1. Warning—read the *Operator's Manual*.
2. Falling hazard—do not carry passengers in the cargo bed.
3. Explosion hazard, static discharge into fuel container—do not fill fuel containers in the cargo bed; place fuel containers on the ground before filling.

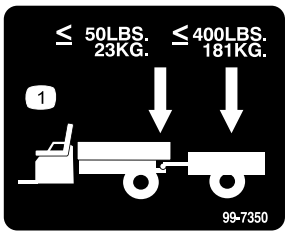

99–7350

1. Maximum tongue weight is 50 lb (23 kg); maximum trailer weight is 400 lb (181 kg).

Setup

Loose Parts

Use the chart below to verify that all parts have been shipped.

Step	Description	Qty.	Use
1	Wheel assembly	4	Install the wheels (Model 07264TC only).
2	Steering wheel	1	Install the steering wheel (Model 07264TC only).
3	Bumper	1	Install the bumper (Model 07264TC only).
4	Seat	2	Install the seats (Model 07264TC only).
5	Hitch	1	Install the hitch (Model 07264TC only).
6	Cargo box Right-hand pivot bracket Left-hand pivot bracket Flange head screw (3/8 x 1 inch) Bolt (5/16 x 3/4 inch) Flange nut (5/16 inch)	1 1 1 4 1 1	Install the cargo box (Model 07264TC only).
7	No parts required	–	Activate the battery (Model 07264TC only).
8	No parts required	–	Adjust the front wheel toe-in.
9	Operator's Manual Engine Operator's Manual Parts Catalog Safety Video Registration Card Predelivery Inspection Form Key	1 1 1 1 1 1 2	Read the Operator's Manual and watch the video before operating the machine.

Note: Determine the left and right sides of the machine from the normal operating position.

Step 1

Installing the Wheels

Parts needed for this step:

4	Wheel assembly

Procedure

Note: This procedure is only needed for Model No. 07264TC.

1. Remove the fasteners securing the wheels.
2. Remove the shipping bracket secured to the wheel studs.
3. Mount the wheels with the previously removed fasteners (Figure 3) and torque to 45-65 ft-lb (61-88 N·m).

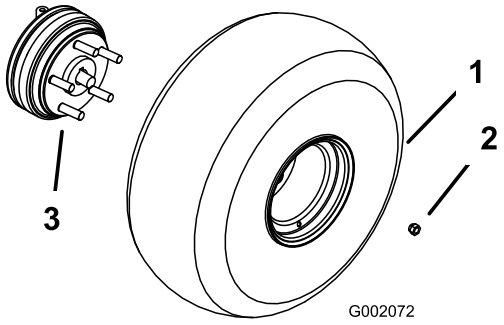

Figure 3

1. Wheel assembly
2. Wheel nut
3. Wheel stud (rear wheel hub shown)

Step 2

Installing the Steering Wheel

Parts needed for this step:

1	Steering wheel

Procedure

Note: This procedure is only needed for Model No. 07264TC.

1. Remove the nut and washer from the steering shaft.
2. Slide the steering wheel and washer onto the shaft. Position the steering wheel on the shaft so that the cross beam is horizontal when the tires are pointed straight ahead and the thicker spoke of the steering wheel is downward.
3. Secure the steering wheel to the shaft with the nut (Figure 4). Torque the nut to 18-22 ft-lb (24-29 N·m)

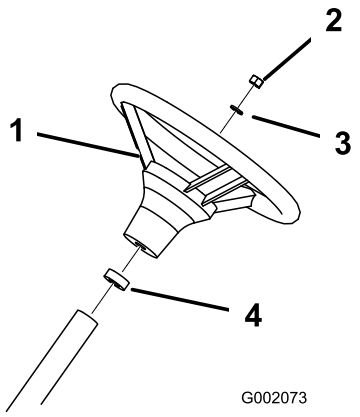

Figure 4

1. Steering wheel
2. Nut
3. Washer
4. Foam seal

Step 3

Installing the Bumper

Parts needed for this step:

1	Bumper

Procedure

Note: This procedure is only needed for Model No. 07264TC.

1. Remove the 2 bolts, washers, and nuts secured to the front of the frame.
2. Align the mounting holes and secure the bumper to the frame with the fasteners previously removed (Figure 5).

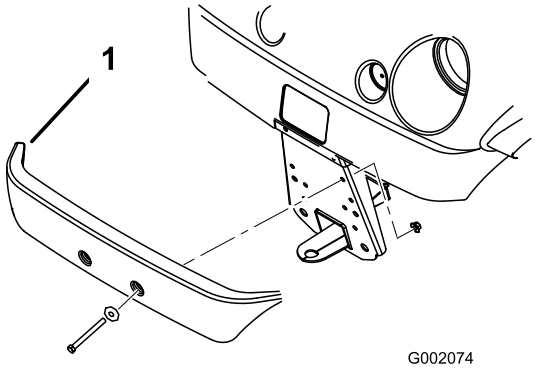

Figure 5

1. Bumper

Step 4

Installing the Seats

Parts needed for this step:

2	Seat

Procedure

Note: This procedure is only needed for Model No. 07264TC.

Insert the seat bracket into the seat base opening and pivot the seat downward (Figure 6).

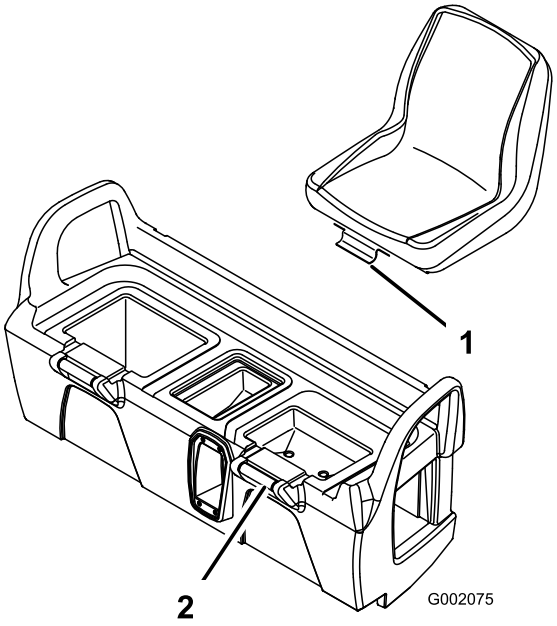

Figure 6

1. Seat bracket
2. Seat base

Step 5

Installing the Hitch

Parts needed for this step:

1	Hitch

Procedure

Note: This procedure is only needed for Model No. 07264TC.

1. Remove the 4 bolts and nuts from the inside rear of the frame.
2. Align the hitch with the mounting holes on the frame. Secure the hitch with the screws and nuts (Figure 7).

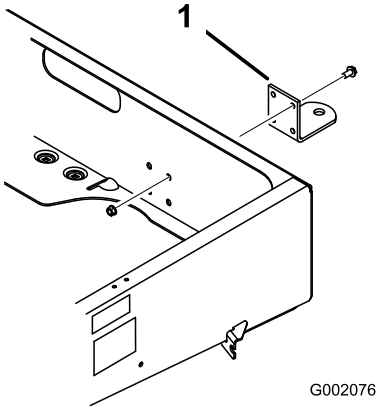

Figure 7

1. Hitch

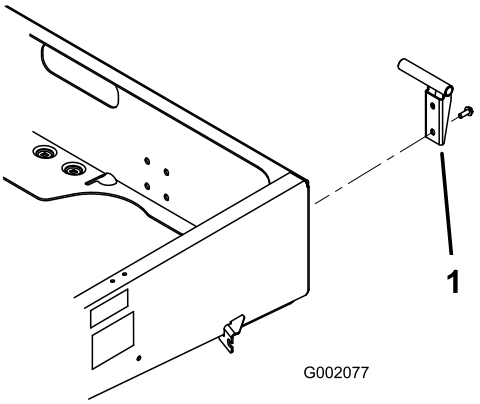

Figure 8

1. Pivot bracket

Step 6

Installing the Cargo Box

Parts needed for this step:

1	Cargo box
1	Right-hand pivot bracket
1	Left-hand pivot bracket
4	Flange head screw (3/8 x 1 inch)
1	Bolt (5/16 x 3/4 inch)
1	Flange nut (5/16 inch)

Procedure

Note: This procedure is only needed for Model No. 07264TC.

1. Position the cargo box onto the frame. The cargo box must lay flat and be centered.
2. Mount the left hand pivot bracket to the left rear corner of the frame with 2 flange head screws (3/8 x 1 inch). Position the bracket as shown in Figure 8.
3. Slide the cargo box mounting hole onto the pivot bracket (Figure 9).

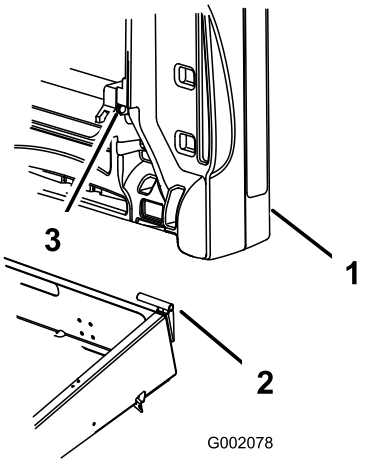

Figure 9

1. Cargo box
2. Pivot bracket
3. Cargo box mounting hole

4. Insert the right hand pivot bracket into the mounting hole in the cargo box and then mount it to the frame.
5. Have another person help to raise the cargo box.
6. Loosen the bolt securing the prop rod clip to the frame until you can slide the J-hook end of the prop rod under the clip (Figure 10).

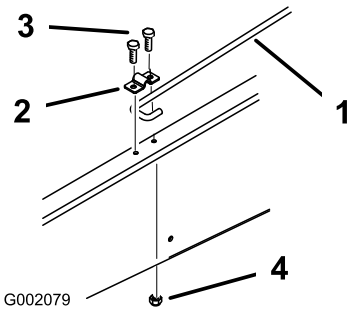

Figure 10

1. Prop rod
2. Prop rod clip
3. Bolt (5/16 x 3/4 inch)
4. Flange nut (5/16 inch)

7. Tighten the bolt and secure the other side of the clip with a new bolt (5/16 x 3/4 inch) and flange nut (5/16 inch) (Figure 10).
8. Lower the cargo box.

Step 7

Activating the Battery

No Parts Required

Procedure

None

Note: This procedure is only needed for Model No. 07264TC.

If the battery is not filled with electrolyte or activated, it must be removed from the vehicle, filled with electrolyte, and charged. Bulk electrolyte with 1.260 specific gravity must be purchased from a local battery supply outlet.

1. Remove the battery hold-down and lift the battery out of the battery base.

Battery electrolyte contains sulfuric acid which is a deadly poison and causes severe burns.

- **Do not drink electrolyte or allow it to contact your skin, eyes or clothing. Wear safety glasses to shield your eyes and rubber gloves to protect your hands.**
- **Fill the battery where clean water is always available for flushing the skin.**

2. Remove the filler caps from the battery and slowly fill each cell until electrolyte is just above the plates.
3. Replace the filler caps and connect a 3 to 4 amp. battery charger to the battery posts. Charge the battery at a rate of 3 to 4 amperes for 4 to 8 hours (12 volts). Do not overcharge the battery.

Charging the battery produces gasses that can explode.

Never smoke near the battery and keep sparks and flames away from battery.

4. When the battery is charged, disconnect the charger from the electrical outlet and battery posts.
5. Remove the filler caps. Slowly add electrolyte to each cell until electrolyte is up to the fill line. Install the filler caps.

   Important: Do not overfill the battery. Electrolyte will overflow onto other parts of the vehicle and severe corrosion and deterioration will result.
6. Install the battery; refer to Installing the Battery, Electrical System Maintenance, page 34.

Step

8

Adjusting the Front Wheel Toe-in

No Parts Required

Procedure

The toe-in should be 1/8-5/8 inch (3-16 mm) with the following parameters:

- The tire pressure should be at 12 psi (83 kPa).
- The ride height should be correct before setting the toe-in; refer to the Adjusting the Front Suspension procedure in Maintenance, page 28.
- The vehicle should be driven back and forth a few times to relax the A-arms.
- Measure the toe-in with the wheels facing straight ahead and a 175-225 lb (79-102 kg) operator in the driver's seat.

  Note: The driver should drive up to the measurement area and stay seated in the vehicle while the measurement is being taken.

  If the vehicle will be run with medium to heavy loads most of the time, set the toe-in on the high side of the recommended amount. If it is going to be run with a light load most of the time, set the toe-in on the low side of the recommended amount.

1. Measure the distance between both of the front tires at the axle height at both the front and rear of the front tires (Figure 11). A fixture or alignment gauge is needed for the rear measurement of the front tires at axle height. Use the same fixture or alignment gauge to accurately measure the front of the front tires at axle height (Figure 11).

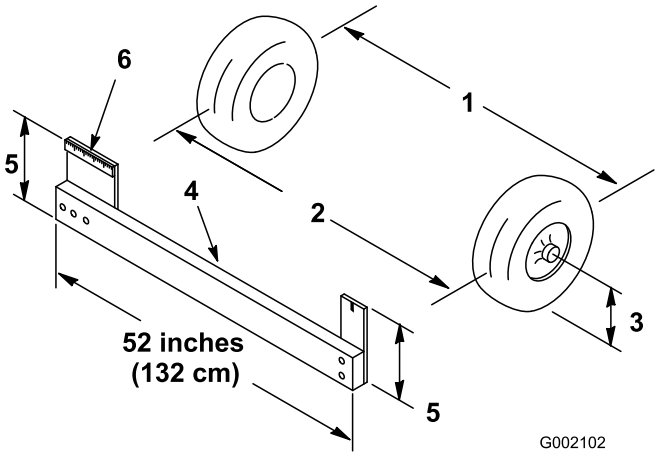

Figure 11

1. Tire center line-back
2. Tire center line-front
3. Axle center line
4. Fixture
5. Axle center line distance
6. 6 inches (15 cm) ruler

2. If the measurement does not fall within the specified range (refer to the dimensions and parameters at the beginning of this procedure), loosen the jam nuts at both ends of the tie rods (Figure 12).

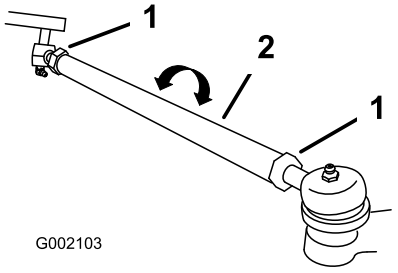

Figure 12

1. Jam nut
2. Tie rod

3. Rotate both tie rods to move the front of the tire inward or outward.
4. Tighten the tie rod jam nuts when the adjustment is correct.
5. Ensure that there is full travel of the steering wheel in both directions.

Step
9

Reading the Manual and Viewing the Safety Video

Parts needed for this step:

1	*Operator's Manual*
1	*Engine Operator's Manual*
1	*Parts Catalog*
1	Safety Video
1	Registration Card
1	*Predelivery Inspection Form*
2	Key

Procedure

- Read the *Operator's Manual* and *Engine Operator's Manual*.
- View the safety video.
- Fill out the registration card.
- Complete the *Predelivery Inspection Form* and file it in your customer history portfolio.

Product Overview

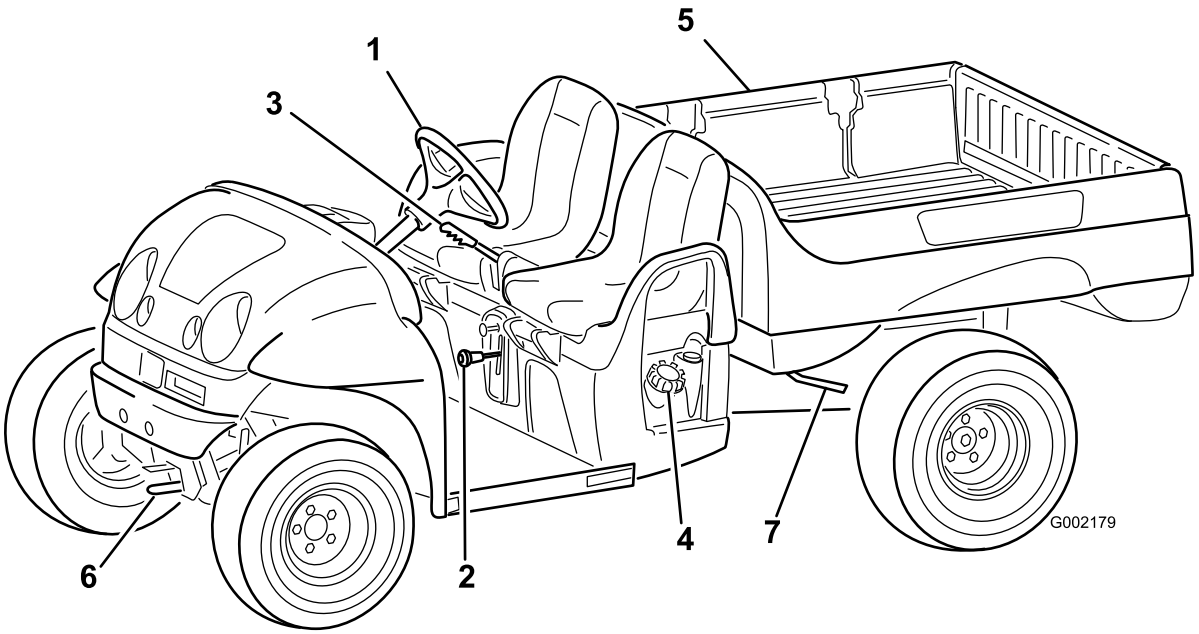

Figure 13

1. Steering wheel
2. Gear shift selector
3. Parking brake
4. Fuel cap
5. Cargo box
6. Towing tongue
7. Cargo box release lever

Controls

Accelerator Pedal

The accelerator pedal (Figure 14) gives the operator the ability to vary ground speed of the vehicle. Pressing the pedal starts the engine. Pressing the pedal farther increases ground speed. Releasing the pedal will slow the vehicle and the engine will stop running. Maximum forward speed is 14 mph (22 km/h).

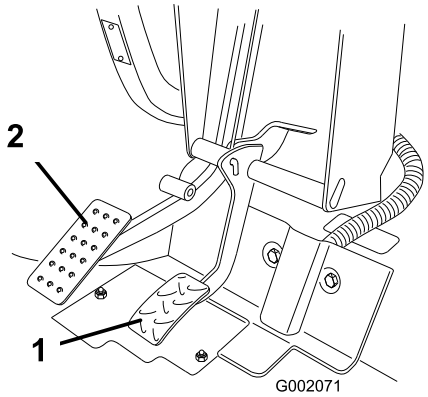

Figure 14

1. Accelerator pedal
2. Brake pedal

Brake Pedal

The brake pedal is used to stop or slow the vehicle (Figure 14).

Brakes can become worn or can be misadjusted resulting in personal injury.

If brake pedal travels to within 1 inch (25 mm) of the vehicle floor board, the brakes must be adjusted or repaired.

Parking Brake

The parking brake is between the seats (Figure 15). Whenever the engine is shut off, the parking brake must be engaged to prevent accidental movement of the vehicle. To engage the parking brake, pull back on the lever. To disengage, push the lever forward. If the vehicle is parked on a steep grade, make sure that the parking brake is applied. Place blocks at the downhill side of the wheels.

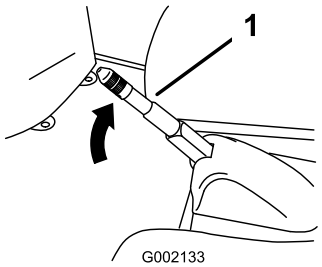

Figure 15

1. Parking brake lever

Choke Control

The choke control is located below and to the right of the operator's seat. To start a cold engine, pull the choke control outward (Figure 16). After the engine starts, regulate the choke to keep the engine running smoothly. As soon as possible, push the control in to the Off position. A warm engine requires little or no choking.

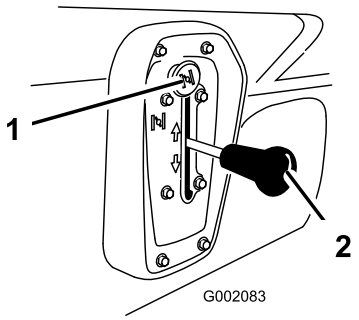

Figure 16

1. Choke
2. Gear shift selector

Gear Shift Selector

The gear shift selector has three positions: forward, reverse, and neutral (Figure 16). The engine will start and run in any of the three positions.

Note: If the gear shift selector is in Reverse when the ignition is turned on, a buzzer will sound to warn the operator.

Important: Always stop the vehicle before changing gears.

Ignition Switch

The ignition switch (Figure 17), used to start and stop the engine, has two positions: Off and On. Rotate the key clockwise to the On position to allow operation. When the vehicle is stopped, rotate the key counterclockwise to the Off position. Remove the key from the ignition.

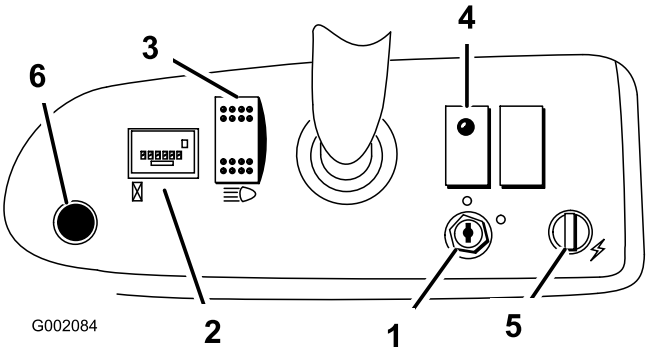

Figure 17

1. Ignition switch
2. Hour meter
3. Light switch
4. Oil light
5. Power Point
6. Horn Button

Hour Meter

The hour meter (Figure 17) indicates the total number of hours the engine has run. The hour meter starts to function whenever the accelerator is pressed.

Oil Light

The oil light warns the operator if the engine oil level drops below a safe level (Figure 17). If the light comes on and remains lit, the oil level should be checked and oil added if necessary; refer to Checking the Engine Oil in Operation, page 22.

Note: The oil light may flicker. This is normal and no action needs to be taken.

Light Switch

Toggle the switch to activate the headlights. Push to turn the lights on (Figure 17).

Power Point

Use the power point to power 12 volt optional electrical accessories (Figure 17).

Horn Button

Press the horn button to sound the horn (Figure 17).

Fuel Gauge

The fuel gauge (Figure 18) shows the amount of fuel in the tank.

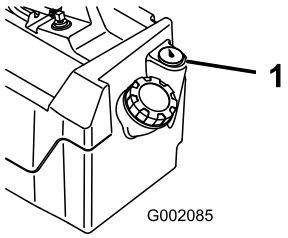

Figure 18

1. Fuel gauge

Passenger Hand Holds

The passenger hand holds are located on the right side of the dash panel and at the outside of each seat (Figure 19).

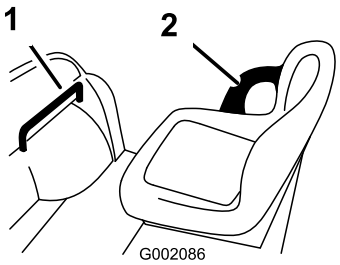

Figure 19

1. Passenger hand hold
2. Hip restraint

Specifications

Note: Specifications and design are subject to change without notice.

Base weight	Dry 1050 lb (476 kg)
Rated capacity (on level ground)	1250 lb (567 kg) total, including 200 lb (90.7 kg) operator and 200 lb (90.7 kg) passenger, load, trailer tongue weight, gross trailer weight, accessories, and attachments
Maximum gross vehicle weight (GVW) (on level ground)	2350 lb (1066 kg) total, including all of the weights listed above
Maximum cargo capacity (on level ground)	850 lb (386 kg) total, including trailer tongue weight and gross trailer weight
Tow capacity: Standard Hitch Heavy Duty Hitch	 Tongue weight 50 lb (23 kg) Maximum trailer weight 400 lb (182 kg) Tongue weight 100 lb (45 kg) Maximum trailer weight 800 lb (363 kg)
Overall width	60 inches (152.4 cm)
Overall length	117 inches (297.2 cm)
Ground clearance	9-1/4 inches (23.5 cm) at the front with no load or operator, 6-1/2 inches (19.7 cm) at the rear with no load or operator
Wheel base	79 inches (200.7 cm)
Wheel tread (center line to center line)	49 inches (124.5 cm) in the front, 48-1/4 inches (122.6 cm) in the rear
Cargo box length	46 inches (116.8 cm) inside, 51 inches (129.5 cm) outside
Cargo box width	49 inches (124.5 cm) inside, 54 inches (137.2 cm) outside
Cargo box height	10 inches (25.4 cm) inside

Attachments/Accessories

A selection of Toro approved attachments and accessories are available for use with the machine to enhance and expand its capabilities. Contact your Authorized Service Dealer or Distributor or go to www.Toro.com for a list of all approved attachments and accessories.

Operation

Note: Determine the left and right sides of the machine from the normal operating position.

Think Safety First

Please carefully read all of the safety instructions and decals in the safety section. Knowing this information could help you or bystanders avoid injury.

Pre-Starting Checks

Check the following items each time you begin using the vehicle for the day:

- Check the tire pressure.

  Note: These tires are different than car tires; they require less pressure to minimize turf compaction and damage.
- Check all fluid levels and add the appropriate amount of specified fluids, if any are found to be low.
- Check the brake pedal operation.
- Ensure that the lights are working.
- Turn the steering wheel to the left and right to check steering response.
- Check for oil leaks, loose parts, and any other noticeable malfunctions. Make sure the engine is off and all moving parts have stopped before checking for oil leaks, loose parts, and other malfunctions.

  If any of the above items are not correct, notify your mechanic or check with your supervisor before taking the vehicle out for the day. Your supervisor may want you to check other items on a daily basis, so ask what your responsibilities are.

Checking the Engine Oil

Note: The engine is shipped with oil in the crankcase; however, the level of the oil must be checked before and after the engine is first started.

Check the engine oil level before starting the engine each day.

1. Position the machine on a level surface.
2. Clean around the oil dipstick (Figure 20) so dirt cannot fall into the hole and damage the engine.



Figure 20

1. Oil dipstick

3. Remove the oil dipstick and wipe the metal end clean.
4. Slide the oil dipstick fully into the filler tube. Pull the dipstick out and look at the metal end.

   If the oil level is low, add oil of the proper type to raise the level to, but not over, the F mark on the dipstick. Refer to Servicing the Engine Oil in Engine Maintenance, page 31, for the proper oil type and viscosity. Add the oil slowly and check the level often during this process. Do not overfill.
5. Install the oil dipstick.

Checking the Brake Fluid Level

Check the brake fluid level before the engine is first started; refer to Checking the Brake Fluid Level in Brake Maintenance, page 41.

Checking the Tire Pressure

Check the tire pressure every 8 hours or daily to ensure proper levels.

The air pressure range in the front and rear tires is 8–22 psi (55–103 kPa).

The air pressure needed is determined by the payload carried. The lower the air pressure, the

less the compaction, smoother the ride, and tire marks are minimized. Lower pressure should not be used for heavy payloads at high speeds.

Higher pressures should be used for heavier payloads at higher speeds. Do not exceed the maximum pressure.

Adding Fuel

Use fresh, clean, unleaded regular gasoline suitable for automotive use (87 pump octane minimum). Leaded gasoline may be used if unleaded regular is not available.

Important: Never use gasoline containing methanol, gasoline containing more than 10% ethanol, gasoline additives, or white gas because engine fuel system damage could result.

In certain conditions, gasoline is extremely flammable and highly explosive. A fire or explosion from gasoline can burn you and others and can damage property.

- **Fill the fuel tank outdoors, in an open area, when the engine is cold. Wipe up any gasoline that spills.**
- **Never fill the fuel tank inside an enclosed trailer.**
- **Do not fill the fuel tank completely full. Add gasoline to the fuel tank until the level is 1/4 to 1/2 inch (6 to 13 mm) below the bottom of the filler neck. This empty space in the tank allows gasoline to expand.**
- **Never smoke when handling gasoline, and stay away from an open flame or where gasoline fumes may be ignited by a spark.**
- **Store gasoline in an approved container and keep it out of the reach of children. Never buy more than a 30-day supply of gasoline.**
- **Do not operate without entire exhaust system in place and in proper working condition.**

In certain conditions during fueling, static electricity can be released causing a spark which can ignite the gasoline vapors. A fire or explosion from gasoline can burn you and others and can damage property.

- **Always place gasoline containers on the ground away from your vehicle before filling.**
- **Do not fill gasoline containers inside a vehicle or on a truck or trailer bed because interior carpets or plastic truck bed liners may insulate the container and slow the loss of any static charge.**
- **When practical, remove gas-powered equipment from the truck or trailer and refuel the equipment with its wheels on the ground.**
- **If this is not possible, then refuel such equipment on a truck or trailer from a portable container, rather than from a gasoline dispenser nozzle.**
- **If a gasoline dispenser nozzle must be used, keep the nozzle in contact with the rim of the fuel tank or container opening at all times until fueling is complete.**

Filling the Fuel Tank

The fuel tank capacity is approximately 7 gallons (26.5 l).

1. Shut the engine off and set the parking brake.
2. Clean the area around the fuel tank cap (Figure 21).

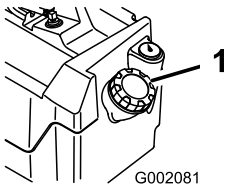

Figure 21

1. Fuel tank cap

3. Remove the fuel tank cap.
4. Fill the tank to about 1 inch (25 mm) below the top of tank, (bottom of the filler neck). This

space in the tank allows gasoline to expand. Do not overfill.

5. Install the fuel tank cap securely. Wipe up any fuel that may have spilled.

Checking the Transmission Oil Level

The transaxle fluid level should be at the bottom of the level indicator hole (Figure 22). If it is not, fill the reservoir with the appropriate fluid; refer to Changing the Transaxle Fluid in Drive System Maintenance, page 36.

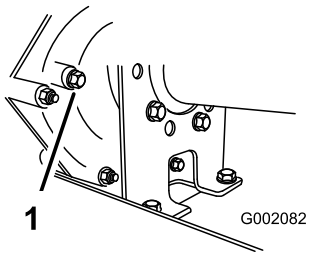

Figure 22

1. Level indicator hole

Starting the Engine

1. Sit in the operator's seat, insert the key into the ignition switch, and rotate the key clockwise to the On position.

   Note: If the gear shift selector is in Reverse, the buzzer will sound to warn the operator.

2. Move the gear shift selector to the desired position.
3. Release the parking brake.
4. Slowly step on the accelerator pedal.

   Note: If the engine is cold, press and hold the accelerator pedal about half-way down, and pull the choke knob out to the On position. Return the choke knob to Off after the engine warms up.

   Important: Do not attempt to push or tow the vehicle to get it started.

Stopping the Vehicle

To stop the vehicle, remove your foot from the accelerator pedal and slowly press the brake pedal.

Note: Stopping distance may vary depending on the vehicle load and speed.

Parking the Vehicle

1. Engage the parking brake and rotate the ignition key to Off.
2. Remove the key from the ignition switch to prevent accidental starting.

Operating the Cargo Box

Raising the Box

Driving the vehicle with the cargo box raised may cause the vehicle to tip or roll easier. The box structure may become damaged if you operate the vehicle with the box raised.

- **Only operate the vehicle when the cargo box is down.**
- **After dumping a load, lower the cargo box.**

1. Lift the lever on either side of the box and lift the box up (Figure 23).

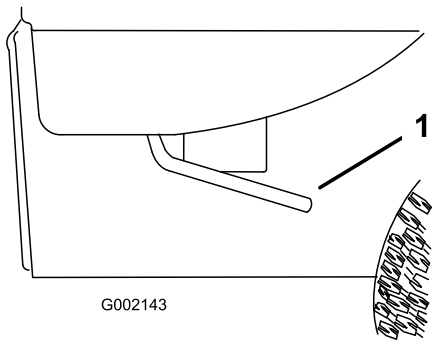

Figure 23

1. Lever

2. Pull the prop rod into the detent slot, securing the box (Figure 24).

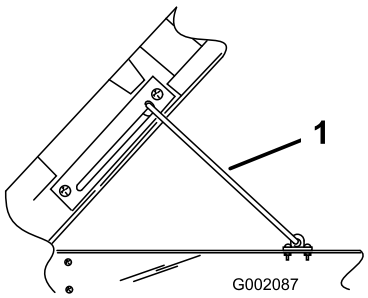

Figure 24

1. Prop rod

Lowering the Box

The weight of the box may be heavy. Hands or other body parts could be crushed.

Keep hands and other body parts clear when lowering the box.

Pull the prop rod out of the detent slot and lower the box until it latches into place.

Adjusting the Box Latches

If the box latch does not latch tightly, vibrating up and down as you drive the vehicle, you can adjust the latch posts to make the latches fit snugly.

1. Loosen the nut on the end of the latch post (Figure 25).

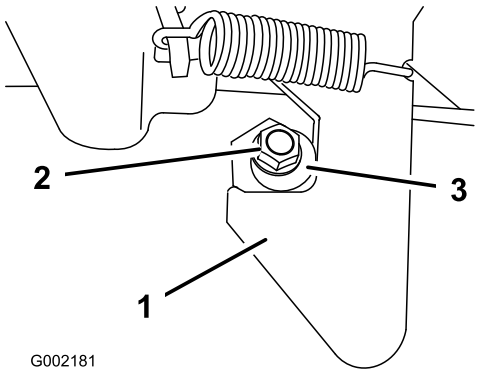

Figure 25

1. Latch
2. Nut
3. Latch post

2. Turn the latch post clockwise until it is snug against the latch and then tighten the nut (Figure 25).
3. Repeat this procedure for the latch on the other side of the vehicle.

Operating the Tailgate Latches

1. To open the tailgate latches, lift the latch handles up (Figure 26). The latches will spring out toward the center of the tailgate. Slowly lower the tailgate.

   Note: You may need to push the end of the tailgate in (especially if there is a load against the tailgate) before the latches will spring toward the center of the tailgate and release.

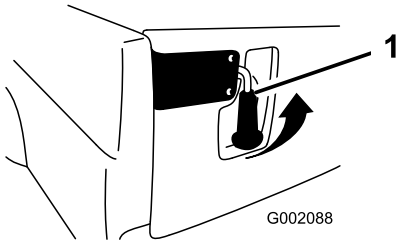

Figure 26

1. Tailgate latch

2. To close the tailgate latches, lift the handles upward and slide them toward the outside of the vehicle.
3. Push the latch handles downward to secure the latch and tailgate.

Breaking in a New Vehicle

To provide proper performance and long vehicle life, follow these guidelines for the first 100 operating hours:

- Check the fluid and engine oil levels regularly and be alert for indications of overheating in any component of the vehicle.
- After starting a cold engine, let it warm up for about 15 seconds before accelerating.
- Avoid hard braking situations for the first several hours of new vehicle break-in operation. New brake linings may not be at optimum performance until several hours of use has caused the brakes to become burnished (broken-in).
- Vary the vehicle speed during operation. Avoid fast starts and quick stops.
- A break-in oil for engine is not required. Original engine oil is the same type specified for regular oil changes.

- Refer to the Maintenance section for any special low hour checks.
- Check the front suspension positioning and adjust it if necessary; refer to Adjusting the Front Suspension in Drive System Maintenance, page 36.

Loading the Cargo Box

The capacity of the cargo box is 13 ft^3 (0.37 m^3). The amount (volume) of material that can be placed in the box without exceeding the vehicle load ratings can vary greatly depending on the density of the material. For example, a level box of wet sand weighs 1500 lb (680 kg), which exceeds the load rating by 650 lb (295 kg). But a level box of wood weighs 650 lb (295 kg), which is under the load rating.

See the table below for load volume limits with various materials:

Material	Density (lb/ft^3)	Max. cargo box capacity (on level ground)
Gravel, dry	95	2/3 full (approx.)
Gravel, wet	120	1/2 full (approx.)
Sand, dry	90	2/3 full
Sand, wet	120	1/2 full
Wood	45	Full
Bark	<45	Full
Earth, packed	100	2/3 full (approx.)

Transporting the Vehicle

For moving the vehicle long distances, a trailer should be used. Make sure that the vehicle is secured to the trailer. Refer to Figure 27 and Figure 28 for the location of the tie-down points.

Loose seats may fall off of the vehicle and trailer when transporting and land on another vehicle or become an obstruction on the road.

Remove the seats or make sure that the seats are securely fastened in the detents.



Figure 27

1. Tie down points

Towing the Vehicle

In case of an emergency, the vehicle can be towed for a short distance. However, we do not recommend this as a standard procedure.

Towing at excessive speeds could cause a loss of steering control, resulting in personal injury.

Never tow the vehicle faster than 5 mph (8 km/h).

Towing the vehicle is a two person job. If the machine must be moved a considerable distance, transport it on a truck or trailer; refer to Transporting the Vehicle.

1. Remove the drive belt; refer to Replacing the Drive Belt in Belt Maintenance, page 41.
2. Affix a tow line to the tongue on the front of the frame (Figure 28).
3. Put the vehicle in neutral and release the parking brake.

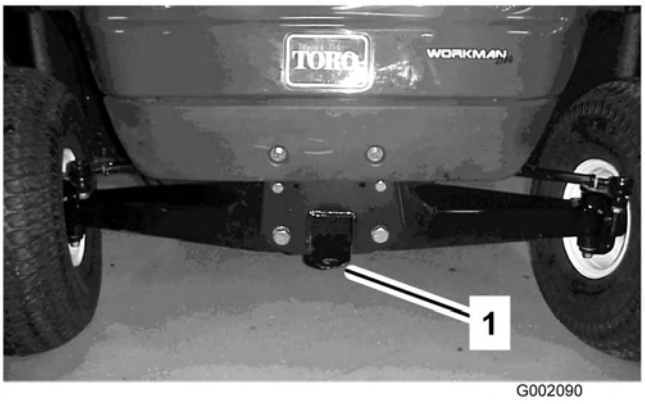

Figure 28

1. Towing tongue and tie down point

Towing a Trailer

The vehicle is capable of pulling trailers. Two types of tow hitches are available for the vehicle, depending on your application. Contact your Authorized Toro Distributor for details.

When hauling cargo or towing a trailer, do not overload your vehicle or trailer. Overloading can cause poor performance or damage to the brakes, axle, engine, transaxle, steering, suspension, body structure, or tires. Always load a trailer with 60% of the cargo weight in the front of the trailer. This places approximately 10% of the Gross Trailer Weight (GTW) on the tow hitch of the vehicle.

The maximum cargo load shall not exceed 850 lb (386 kg), including the GTW and tongue weight. For example, if the GTW = 400 lb (181.5 kg) and tongue weight = 50 lb (23 kg), then the maximum cargo load = 400 lb (181.5 kg)

To provide adequate braking and traction, always load the cargo box when trailering. Do not exceed the GTW limits.

Avoid parking a vehicle with a trailer on a hill. If you must park on a hill, engage the parking brake and block the trailer tires.

Maintenance

Note: Determine the left and right sides of the machine from the normal operating position.

Recommended Maintenance Schedule(s)

Maintenance Service Interval	Maintenance Procedure
After the first 8 operating hours	• Check the engine oil. • Check the condition and tension of the drive belt. • Check the tension of the starter generator belt.
After the first 25 operating hours	• Change the engine oil. • Check the front wheel toe-in and front suspension.
Before each use or daily	• Check the engine oil. • Check the tire pressure. • Check the transmission oil level. • Check the brake fluid level.
Every 50 hours	• Check the battery cable connections for wear or damage. • Check the battery electrolyte level.
Every 100 hours	• Grease the bearings and bushings. • Inspect and clean the air filter element (twice as often in special operating conditions; refer to Maintaining the Vehicle under Special Operating Conditions). • Change the engine oil (twice as often in special operating conditions; refer to Maintaining the Vehicle under Special Operating Conditions). • Check the spark plug. • Check the operation of the Neutral gear shift position. • Inspect the condition and wear of the tires. • Torque the wheel lug nuts to 45-65 ft-lb (61-88 N·m). • Check the front wheel toe-in and front suspension. • Clean the engine cooling areas (twice as often in special operating conditions; refer to Maintaining the Vehicle under Special Operating Conditions). • Inspect the brakes.
Every 200 hours	• Replace the air filter element. • Adjust the parking brake. • Check the condition and tension of the drive belt. • Check the tension of the starter generator belt.
Every 400 hours	• Inspect the fuel lines and connections. • Clean and lubricate the primary drive clutch.
Every 800 hours	• Replace the fuel filter. • Change the transaxle fluid.
Yearly	• Complete all yearly maintenance procedures specified in the Engine Operator's Manual.

Important: **Refer to your Engine Operator's Manual for additional maintenance procedures.**

Daily Maintenance Checklist

Duplicate this page for routine use.

Maintenance Check Item	For the week of:						
	Mon.	Tues.	Wed.	Thurs.	Fri.	Sat.	Sun.
Check brake and parking brake operation.							
Check gear shift/neutral operation.							
Check fuel level.							
Check engine oil level.							
Check transaxle oil level.							
Inspect air filter.							
Inspect engine cooling fins.							
Check unusual engine noises.							
Check unusual operating noises.							
Check tire pressure.							
Check fluid leaks.							
Check instrument operation.							
Check accelerator operation.							
Check ride height and toe-in.							
Lubricate all grease fittings.							
Touch up damaged paint.							



If you leave the key in the ignition switch, someone could accidently start the engine and seriously injure you or other bystanders.

Remove the key from the ignition and disconnect the wire from the spark plug before you do any maintenance. Set the wire aside so that it does not accidentally contact the spark plug.



The bed must be raised to perform some routine maintenance.

A raised bed can fall and injure persons that are underneath it.

- **Always use the prop rod to hold the bed up before working under it.**
- **Remove any load material from the bed before working under it.**

Premaintenance Procedures

Maintaining the Vehicle under Special Operating Conditions

If the vehicle is subjected to any of the conditions listed below, maintenance should be performed twice as frequently.

- Desert operation
- Cold climate operation (below 50 degrees F [10 degrees C])
- Trailer towing
- Driving time typically less than 5 minutes
- Frequent operation in dusty conditions
- Construction work
- After extended operation in mud, sand, water, or similar dirty conditions, have your brakes inspected and cleaned as soon as possible. This will prevent any abrasive material from causing excessive wear.
- Under frequent heavy duty operating conditions, lubricate all grease fittings and inspect air cleaner daily to prevent excessive wear.

Jacking the Vehicle

Whenever the engine is run for routine maintenance and/or engine diagnostics, the rear wheels of the vehicle should be 1 inch (25 mm) off the ground with the rear axle supported on jack stands.

The vehicle may be unstable when using a jack. It could slip off the jack, injuring anyone beneath it.

- **Do not start the engine while the vehicle is on a jack.**
- **Always remove the key from the ignition before getting off of the vehicle.**
- **Block the tires when the vehicle is on a jack.**

The jacking point at the front of the vehicle is on the front of the frame behind the towing tongue (Figure 29) The jacking point at the rear of the vehicle is under the axle tubes (Figure 30).

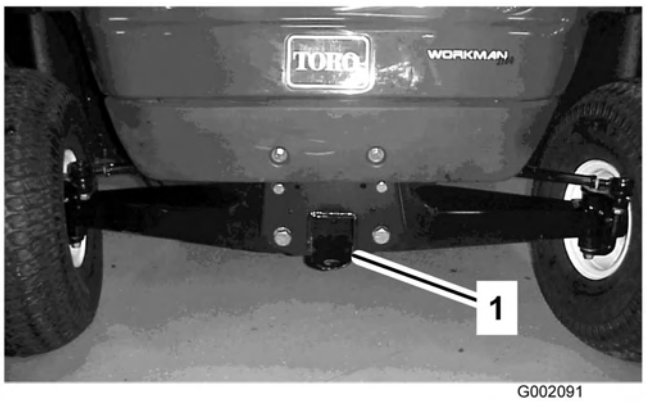

Figure 29

1. Front jacking point



Figure 30

1. Rear jacking points

Lubrication

Lubricate all of the bearings and bushings every 100 hours or once a year, whichever occurs first. Grease them more frequently when using the vehicle for heavy-duty operations.

Grease Type: Number 2 General Purpose Lithium Base Grease

Adding Grease

1. Wipe the grease fitting clean so foreign matter cannot be forced into the bearing or bushing.
2. Pump grease into the bearing or bushing.
3. Wipe off excess grease.

The grease fittings are located at the four tie rod ends (Figure 31 and the two king pins (Figure 32).

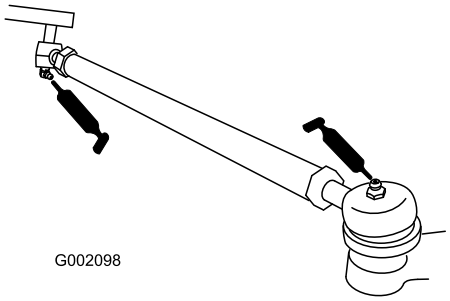

Figure 31

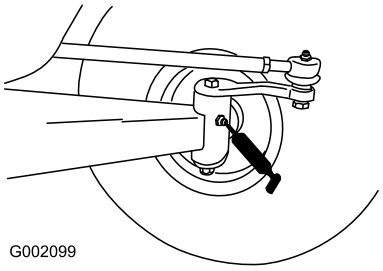

Figure 32

Engine Maintenance

Servicing the Air Cleaner

Check the air cleaner body for damage which could possibly cause an air leak. Replace a damaged air cleaner body.

Ensure the cover is sealing around the air cleaner body.

Air Cleaner Filter: Inspect after every 100 operating hours; replace after every 200 hours or sooner if dirty or damaged.

Note: Service the air cleaner more frequently (every few hours) if operating conditions are extremely dusty or sandy.

Removing the Filter Element

1. Park the machine on a level surface, set the parking brake, turn the ignition off, and remove the key.
2. Raise the bed and secure it with the prop rod.
3. Release the latches securing the air cleaner cover to the air cleaner body. Separate the cover from the body. Clean the inside of the air cleaner cover (Figure 33).
4. Gently slide the filter out of the air cleaner body to reduce the amount of dust dislodged (Figure 33). Avoid knocking the filter against the air cleaner body.

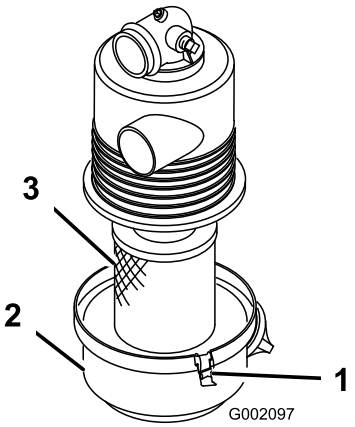

Figure 33

1. Air cleaner latches
2. Cover
3. Filter

5. Inspect the filter and discard it if it is damaged.

Cleaning the Filter Element

Important: Do not wash or reuse a damaged filter.

- **Washing method:**
  1. Prepare a solution of filter cleaner and water and soak the filter element for about 15 minutes. Refer to the directions on the filter cleaner carton for complete information.
  2. After soaking the filter for 15 minutes, rinse it with clear water. Rinse the filter from the clean side to the dirty side.

     Important: To prevent damage to the filter element, the maximum water pressure must not exceed 40 psi. (276 kPa).
  3. Dry the filter element using warm, flowing air at 160 degrees F (71 degrees C) maximum, or allow the element to air-dry.

     Important: Do not use a light bulb to dry the filter element because damage could result.
- **Compressed air method:**

1. Blow compressed air from the inside to the outside of the dry filter element. Keep the air hose nozzle at least 2 inches (51 mm) from the filter and move the nozzle up and down while rotating the filter element.

   Important: To prevent damage to the filter element, do not exceed 100 psi (689 kPa) air pressure.

2. Inspect the filter element for holes and tears by looking through the filter toward a bright light.

Installing the Filter Element

Important: To prevent engine damage, always operate the engine with the complete air cleaner assembly installed.

1. Inspect the new filter for shipping damage. Check the sealing end of the filter.

   Important: Do not install a damaged filter.

2. Insert the new filter into air cleaner body. Ensure the filter is sealed properly by applying pressure to the outer rim of the filter when installing it. Do not press on the flexible center of the filter.
3. Install the cover and secure the latches.

Servicing the Engine Oil

Check the oil level before each use.

Change the oil after the first 25 operating hours and every 100 operating hours thereafter. Change the oil twice as often in special operating conditions; refer to Maintaining the Vehicle under Special Operating Conditions.

Note: Change the oil more frequently when operating conditions are extremely dusty or sandy.

Oil Type: Detergent oil (API service SG, SH, SJ, or higher)

Viscosity: See the table below.

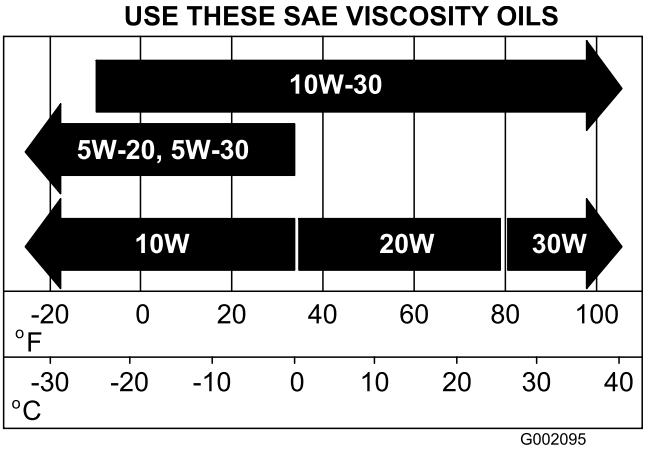

Figure 34

Checking the Oil Level

To check the oil level, refer to Checking the Engine Oil in Operation, page 22.

Changing the Oil

1. Start the vehicle and let it run for a few minutes to warm the oil.
2. Park the machine on a level surface, set the parking brake, turn the ignition off, and remove the key.
3. Raise the bed and secure it with the prop rod.
4. Disconnect the spark plug wires and battery cables.
5. Remove the drain plug (Figure 35) and let the oil flow into a drain pan. When the oil has drained completely, install the drain plug and torque it to 13 ft-lb (17.6 N·m).



Figure 35

1. Engine oil drain plug

Note: Dispose of the used oil at a certified recycling center.

6. Clean around the oil dipstick and unscrew the cap.
7. Slowly pour approximately 80% of the specified amount of oil into the filler tube and check the oil level; refer to Checking the Crankcase Oil in Operation, page 22. Slowly add oil to bring the level to the F mark on the dipstick.
8. Install the dipstick.

Servicing the Spark Plug

Check the spark plug after every 100 operating hours or yearly, whichever occurs first. Replace if necessary.

Type: Champion RN14YC (or equivalent)

Air Gap: 0.030 inch (0.762 mm)

Checking and Replacing the Spark Plug

Note: The spark plug usually lasts a long time; however, the plug should be removed and checked whenever the engine malfunctions.

1. Clean the area around the spark plugs so that foreign matter cannot fall into the cylinder when the spark plug is removed.
2. Pull the wires off of the spark plugs and remove the plugs from the cylinder head.
3. Check the condition of the side electrode, center electrode, and center electrode insulator to ensure that there is no damage (Figure 36).

Important: A cracked, fouled, dirty, or malfunctioning spark plug must be replaced. Do not sand-blast, scrape, or clean electrodes by using a wire brush because grit may eventually release from the plug and fall into the cylinder. The result is usually a damaged engine.

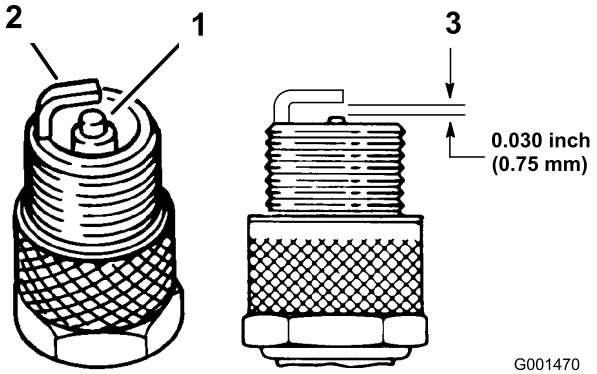

Figure 36

1. Center electrode insulator
2. Side electrode
3. Air gap (not to scale)

4. Set the air gap between the center and side of the electrodes at 0.030 inch (0.762 mm) (Figure 36). Install the correctly gapped spark plug and tighten the plug to 14 ft-lb (20 N·m).
5. Install the spark plug wires.

Fuel System Maintenance

Inspecting Fuel Lines and Connections

Check the fuel lines and connections every 400 operating hours or yearly, whichever occurs first. Inspect them for deterioration, damage, or loose connections.

Replacing the Fuel Filter

Replace the fuel filter every 800 operating hours or yearly, whichever occurs first.

1. Raise the box and support it with the prop rod.

2. Place a clean container under the fuel filter.
3. Remove the clamps securing the fuel filter to the fuel lines (Figure 37).

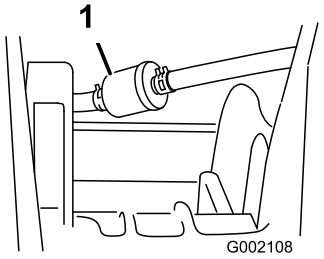

Figure 37

1. Fuel filter

4. Install the replacement filter to the fuel lines with the clamps previously removed.

   Mount the filter so that the arrow points **toward** the carburetor.

Electrical System Maintenance

Replacing the Fuses

There are 3 fuses in the electrical system. They are located beneath the bed in a box on the right hand side of the frame (Figure 38).

Ignition System	10 amp.
Lights	10 amp.
Power Point	10 amp. (15 amp. max.)

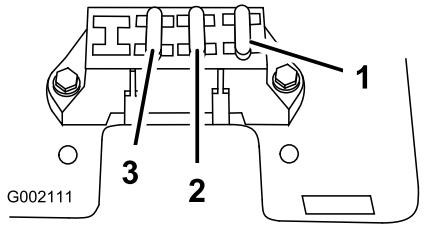

Figure 38

1. Ignition system
2. Lights
3. Power point

Replacing the Headlights

Specification: GE Headlight #H7610

1. Set the parking brake, turn the ignition off, and remove the key.
2. Reach beneath the dash and push the headlight out of the hood.
3. Remove the screws attaching the wire harness to the headlight.
4. Remove the rubber seal from around the headlight (Figure 39). Discard the headlight.

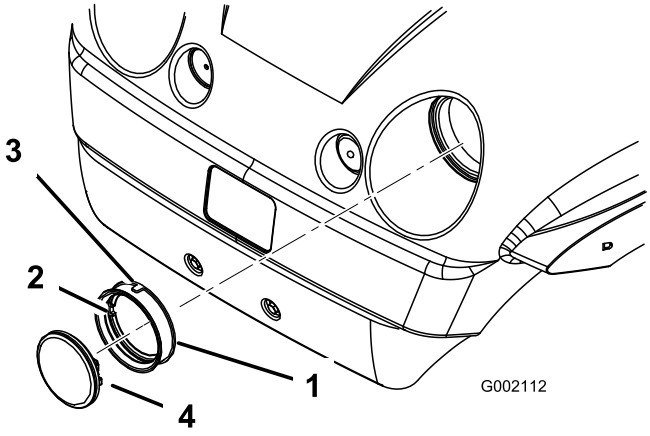

Figure 39

1. Rubber seal
2. Inside notch-align with the notch on the headlight
3. Outside notch-align with notch in hood
4. Headlight

5. Align the notch on the inside of the seal with the notch on the new headlight (Figure 39). Slide the seal onto the headlight until the seal is firmly in place.
6. Attach the headlight to the wire harness using the previously removed screws.
7. Align the notch on the outside of the seal with the notch in the hood. Push the headlight and seal into the hood until it is firmly in place.

   Note: Applying soapy water to the outside of the seal may aid in sliding the seal into the hood.

Servicing the Battery

Warning

CALIFORNIA
Proposition 65 Warning

Battery posts, terminals, and related accessories contain lead and lead compounds, chemicals known to the State of California to cause cancer and reproductive harm. Wash hands after handling.

Important: Do not jump start the vehicle.

Always keep the battery clean and fully charged. Use a paper towel to clean the battery and battery box. If the battery terminals are corroded, clean them with a solution of four parts water and one part baking soda. Apply a light coating of grease to the battery terminals to prevent corrosion.

Voltage: 12 volt with 280 cold cranking Amps @ 0 degrees F (-18 degrees C).

Removing the Battery

1. Position the vehicle on a level surface, set the parking brake, turn the ignition off, and remove the key.
2. Raise the bed and secure it with the prop rod.
3. Remove the battery hold-down.
4. Disconnect the negative (black) ground cable from the battery post.

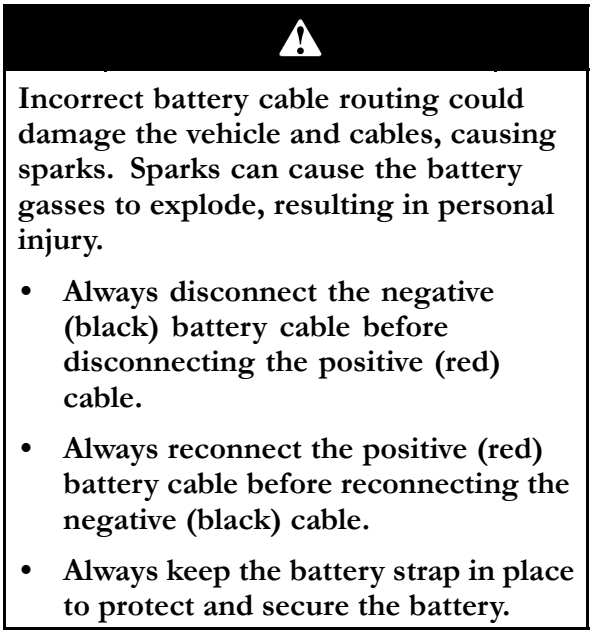

Incorrect battery cable routing could damage the vehicle and cables, causing sparks. Sparks can cause the battery gasses to explode, resulting in personal injury.

- **Always disconnect the negative (black) battery cable before disconnecting the positive (red) cable.**
- **Always reconnect the positive (red) battery cable before reconnecting the negative (black) cable.**
- **Always keep the battery strap in place to protect and secure the battery.**

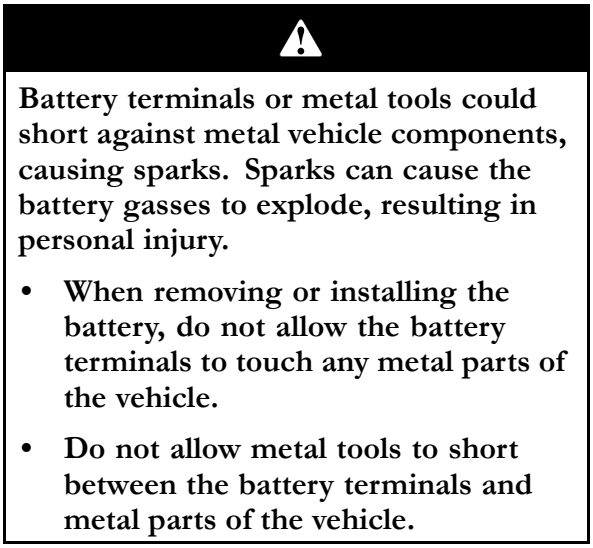

Battery terminals or metal tools could short against metal vehicle components, causing sparks. Sparks can cause the battery gasses to explode, resulting in personal injury.

- **When removing or installing the battery, do not allow the battery terminals to touch any metal parts of the vehicle.**
- **Do not allow metal tools to short between the battery terminals and metal parts of the vehicle.**

5. Disconnect the positive (red) cable from the battery post.
6. Remove the battery from the chassis.

Installing the Battery

1. Set the battery on the battery base so the battery posts are toward the rear of the vehicle.
2. Connect the positive (red) cable to the positive (+) battery post and the negative (black) cable to the negative (-) battery post using the bolts and wing nuts. Slide the rubber boot over the positive battery post.
3. Replace the battery hold-down to secure the battery to the base.

Important: Always keep the battery hold-down in place to protect and secure the battery.

Checking the Electrolyte Level

Check the electrolyte level every 50 operating hours or, if the machine is in storage, every 30 days.

1. Raise the bed and secure it with the prop rod.
2. Remove the filler caps. If the electrolyte is not up to the fill line, add the required amount of distilled water; refer to Adding Water to the Battery.

Battery electrolyte contains sulfuric acid which is a deadly poison and causes severe burns.

- **Do not drink electrolyte or allow it to contact your skin, eyes or clothing. Wear safety glasses to shield your eyes and rubber gloves to protect your hands.**
- **Fill the battery where clean water is always available for flushing the skin.**

Adding Water to the Battery

The best time to add distilled water to the battery is just before you operate the machine. This lets the water mix thoroughly with the electrolyte solution.

1. Clean the top of the battery with a paper towel.
2. Remove the filler caps from the battery and slowly fill each cell with distilled water until the level is up to the fill line. Replace the filler caps.

   Important: Do not overfill the battery. Electrolyte will overflow onto other parts of the vehicle and severe corrosion and deterioration will result.

Charging the Battery

Important: Always keep the battery fully charged (1.260 specific gravity). This is especially important to prevent battery damage when the temperature is below 32 degrees F (0 degrees C).

1. Remove the battery from the chassis; refer to Removing the Battery.
2. Connect a 3 to 4 amp battery charger to the battery posts. Charge the battery at a rate of 3 to 4 amperes for 4 to 8 hours (12 volts). Do not overcharge the battery.

   Charging the battery produces gasses that can explode.

   Never smoke near the battery and keep sparks and flames away from battery.

3. Install the battery in the chassis; refer to Installing the Battery.

Storing the Battery

If the machine will be stored for more than 30 days, remove the battery and charge it fully. Either store it on the shelf or on the machine. Leave the cables disconnected if it is stored on the machine. Store the battery in a cool atmosphere to avoid quick deterioration of the charge in the battery. To prevent the battery from freezing, make sure it is fully charged.

Drive System Maintenance

Checking and Adjusting Neutral

When performing routine maintenance and/or engine diagnostics, the transaxle must be shifted into neutral (Figure 40). The vehicle has a neutral position on the shift lever, which controls the neutral in the transaxle. The following steps should be taken to make sure that the neutral shift lever operates the transaxle neutral correctly:

1. Set the shift lever into the Neutral position.
2. Ensure that the neutral bracket is in the neutral position (level) by turning the drive clutch (Figure 40). The vehicle should not roll back and forth. If it does, manually move the neutral bracket to the neutral position.

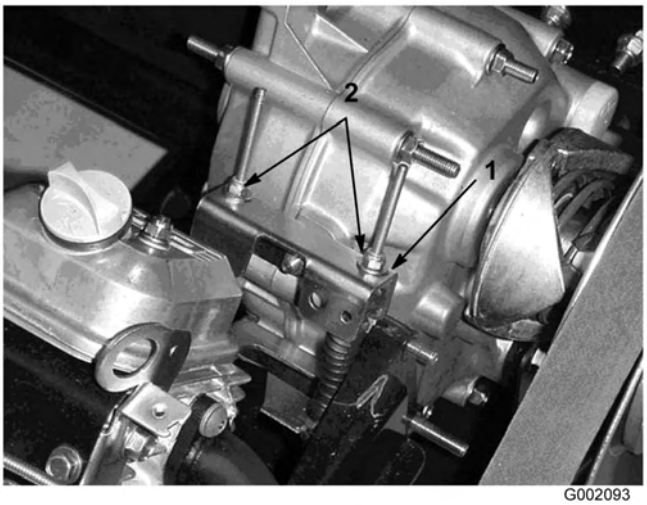

Figure 40

1. Neutral bracket
2. Locknuts

3. Tighten one of the locknuts (Figure 40) just enough to take the slack out of the shift cable.

   Note: You must hold the threaded shaft below the bracket to tighten the locknut on top.

4. Tighten the other locknut just enough to take the slack out of the other shift cable.

5. Pull up on each shift cable an ensure that there is no gap between the nut/washer and the neutral bracket (Figure 41). If there is a gap, tighten the nut.

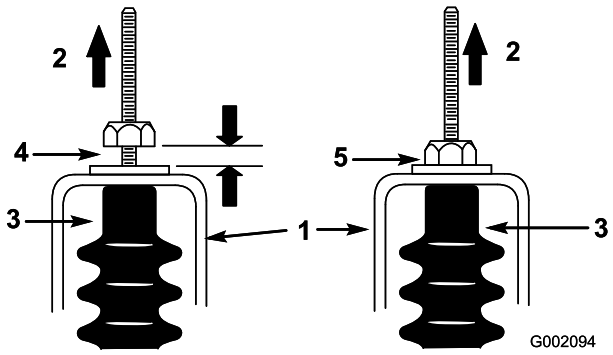

Figure 41

1. Neutral bracket
2. Pull up
3. Cable boot
4. Wrong, must tighten the nut
5. Correct adjustment

6. Start the engine and shift into Forward, Reverse, and Neutral several times to ensure that the neutral bracket is operating properly.

Inspecting the Tires

Check the tire condition at least every 100 hours of operation. Operating accidents, such as hitting curbs, can damage a tire or rim and also disrupt wheel alignment, so inspect tire condition after an accident.

Check the wheels to ensure that they are mounted securely. Torque the lug nuts to 45-65 ft-lb (61-88 N·m).

Adjusting the Front Suspension

The ride height of each side of the vehicle can be adjusted separately. The ride height should be 8-3/4 to 9-1/2 inches (22.2 to 24 cm) with the following parameters:

- The tire pressure should be at 12 psi (83 kPa).
- The vehicle should be driven back and forth a few times to relax the A-arms.
- Measure the ride height with the wheels facing straight ahead and a 175-225 lb (79-102 kg) operator in the driver's seat.

  Note: The driver should drive up to the measurement area and stay seated in the vehicle while the measurement is being taken.

- Measure the ride height on a flat surface, from the bottom of the front tongue to the ground.

1. Jack the front end of the vehicle off of the ground; refer to Jacking the Vehicle in Premaintenance Procedures, page 30.
2. Remove the travel limiting bolt (Figure 42).
3. Loosen the centering bolts in the front A-arm (Figure 42).
4. Remove the ride height adjustment bolt (Figure 42).

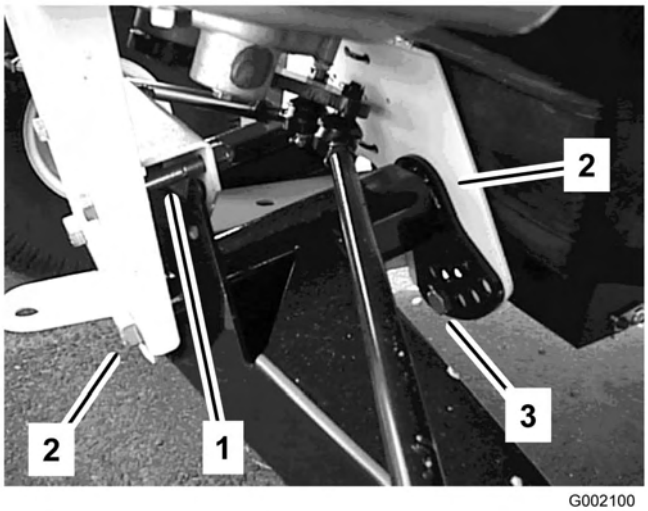

Figure 42

1. Travel limiting bolt
2. Centering bolt
3. Ride height adjustment bolt

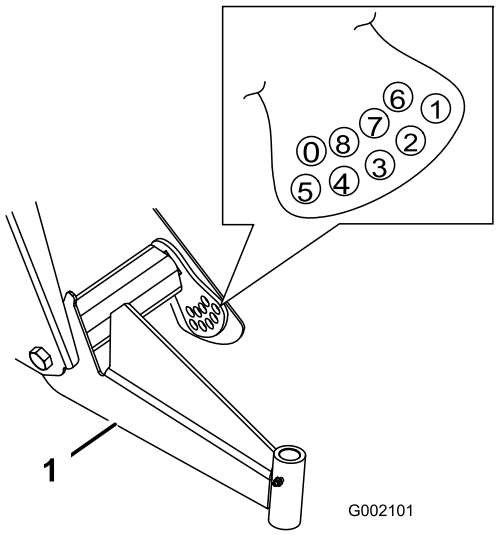

Figure 43

1. Left-hand A-arm

5. Rotate the front A-arm to the desired position (refer to the note below) and replace the ride height adjustment bolt (Figure 42).

   Note: The A-arms are made with rubber and have different spring rates. Because of the different spring rates, the A-arms come adjusted from the factory based on that spring rate. Generally the adjustment bolts will be installed in hole number 2, 3, or 4 (Figure 43) and it may be different from the left side (driver side) to the right side (passenger side). If the A-arms look like they are sagging, then they should be adjusted to the next higher number (Figure 43). Each hole equals about 3/4 inch (19 mm) of adjustment at the wheel. You will also need to do this if you are adding heavy attachments or carrying heavy loads often.

6. Torque the ride height adjustment bolt to 135-165 ft-lb (183-224 N·m).
7. Replace the travel limiting bolt (Figure 42).

   Note: The vehicle may need to be lowered to the ground on that side to install the bolt.

8. Tighten and torque the centering bolts to 240-290 ft-lb (325-393 N·m).
9. Check the ride height at the front tongue per the dimensions and parameters given at the beginning of this procedure.

Adjusting Front Wheel Toe-In

Check the front wheel toe-in after every 100 operating hours, or annually, whichever occurs first.

The toe-in should be 1/8-5/8 inch (3-16 mm) with the following parameters:

- The tire pressure should be at 12 psi (83 kPa).
- The ride height should be correct before setting the toe-in; refer to Adjusting the Front Suspension.
- The vehicle should be driven back and forth a few times to relax the A-arms.
- Measure the toe-in with the wheels facing straight ahead and a 175-225 lb (79-102 kg) operator in the driver's seat.

Note: The driver should drive up to the measurement area and stay seated in the vehicle while the measurement is being taken.

If the vehicle will be run with medium to heavy loads most of the time, set the toe-in on the high side of the recommended amount. If it is going to be run with a light load most of the time, set the toe-in on the low side of the recommended amount.

1. Ensure that the front suspension is adjusted properly; refer to Adjusting the Front Suspension. Adjust if necessary.
2. Measure the distance between both of the front tires at the axle height at both the front and rear of the front tires (Figure 44). A fixture or alignment gauge is needed for the rear measurement of the front tires at axle height. Use the same fixture or alignment gauge to accurately measure the front of the front tires at axle height (Figure 44).

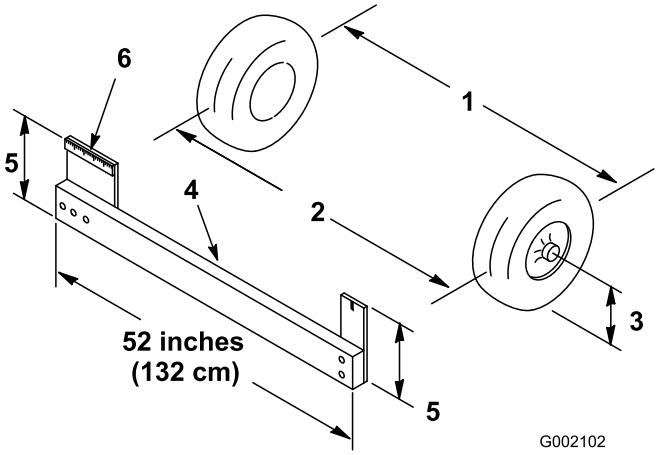

Figure 44

1. Tire center line-back
2. Tire center line-front
3. Axle center line
4. Fixture
5. Axle center line distance
6. 6 inches (15 cm) ruler

3. If the measurement does not fall within the specified range (refer to the dimensions and parameters at the beginning of this procedure), loosen the jam nuts at both ends of the tie rods (Figure 45).

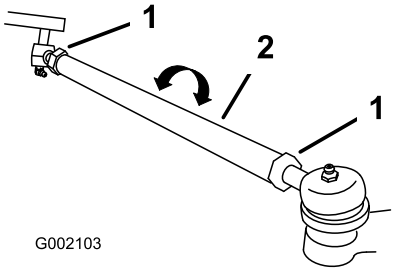

Figure 45

1. Jam nut
2. Tie rod

4. Rotate both tie rods to move the front of the tire inward or outward.
5. Tighten the tie rod jam nuts when the adjustment is correct.
6. Ensure that there is full travel of the steering wheel in both directions.

Maintaining the Primary Drive Clutch

After every 400 operating hours or yearly, clean and lubricate the clutch as follows:

1. Raise and latch the cargo box.
2. Stop the engine, remove the key, and set the parking brake.
3. Remove the 3 bolts securing the cover to the clutch and remove the cover (Figure 46).

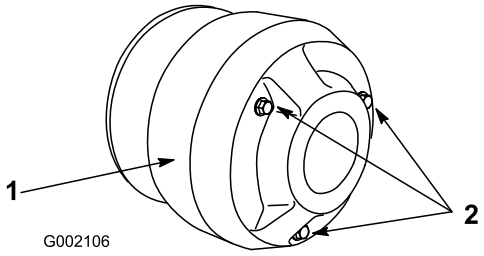

Figure 46

1. Cover
2. Bolts

4. Thoroughly clean the inside of the cover and the inner workings of the clutch using compressed air.

The dust in the clutch will become airborne and could damage your eyes or you could inhale it causing breathing difficulties.

Wear safety goggles and a dust mask or other eye and respiratory protection when performing this procedure.

5. Lubricate the moving parts in the areas circled in Figure 47 using Toro Dry Lubricant Spray, available through your Authorized Toro Dealer or Distributor.

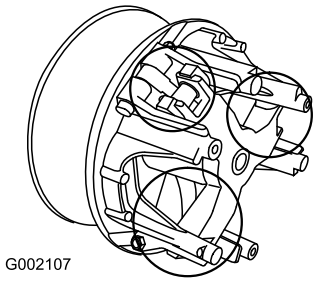

Figure 47

6. Install the clutch cover and secure it with the 3 bolts removed previously.

Changing the Transaxle Fluid

Change the transaxle fluid every 800 operating hours or yearly, whichever occurs first.

1. Position the vehicle on a level surface, set the parking brake, turn the ignition off, and remove the key.
2. Remove the drain plug from the right side of the reservoir (Figure 48) and let the fluid flow into a drain pan. Install and tighten the plug when the fluid stops draining.

   Note: Dispose of the used oil at a certified recycling center.

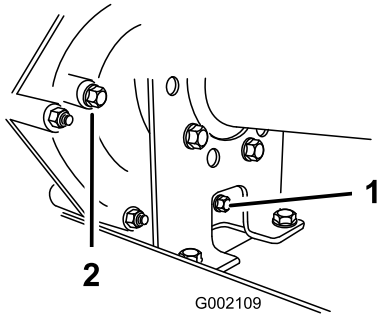

Figure 48

1. Drain plug
2. Level indicator hole

3. Fill the reservoir (Figure 49) with approximately 1-1/2 qt. (1.4 liters) of SAE 10W30 motor oil or until the oil level is at the bottom of the level indicator hole (Figure 48).

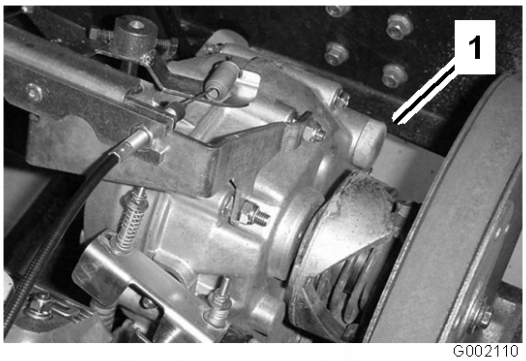

Figure 49

1. Oil fill

4. Start the engine and operate it to fill the system. Recheck the oil level and replenish it, if required.

Cooling System Maintenance

Cleaning the Engine Cooling Areas

Clean the rotating screen, cooling fins, and external surfaces of the engine every 100 operating hours or more often under extremely dusty and dirty conditions.

Important: Operating the engine with a blocked rotating screen, dirty or plugged cooling fins, or cooling shrouds removed will cause engine damage due to overheating.

Important: Never clean the engine with pressurized water because water could contaminate the fuel system.

Brake Maintenance

Inspecting the Brakes

Brakes are a critical safety component of the vehicle. As with all safety components, they should be closely inspected at regular intervals to ensure optimum performance and safety. The following inspections should be done every 100 hours:

- Inspect the brake shoes for wear or damage. If the lining (brake pad) thickness is less than 1/16 inch (1.6 mm), the brake shoes should be replaced.
- Inspect the backing plate and other components for signs of excessive wear or deformation. If any deformation is found, the appropriate components must be replaced.
- Check the brake fluid level; refer to Checking the Brake Fluid Level.

Checking the Brake Fluid Level

The brake fluid reservoir is filled and shipped from the factory with DOT 3 brake fluid. Check the level before the engine is first started and every 8 hours or daily, thereafter.

1. Park the machine on a level surface, set the parking brake, turn the ignition off, and remove the key.
2. Look at the side of the reservoir. The level should be above the Minimum line (Figure 50). If the fluid level is low, clean the area around the cap, remove the cap, and fill the reservoir to above the Minimum line. Do not overfill.

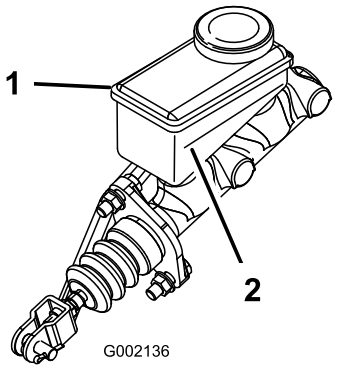

Figure 50

1. Brake fluid reservoir
2. Minimum line

Adjusting the Parking Brake

Check the parking brake adjustment every 200 hours.

1. Pry the rubber cover off of the parking brake.
2. Loosen the set screw securing the knob to the parking brake lever (Figure 51).

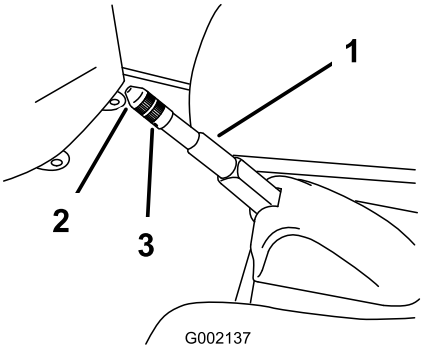

Figure 51

1. Parking brake lever
2. Knob
3. Set screw

3. Rotate the knob until a force of 30-35 lb (133-156 N) is required to actuate the lever.
4. Tighten the set screw and install the rubber cover.

Belt Maintenance

Servicing the Drive Belt

Checking the Drive Belt

Check the condition and tension of the drive belt after the first day of operation and every 200 operating hours thereafter.

1. Park the machine on a level surface, shift into Neutral, set the parking brake, turn the ignition off, and remove the key.
2. Raise the bed and secure it with the prop rod.
3. Rotate and inspect the belt (Figure 52) for excessive wear or damage. Replace the belt if necessary.

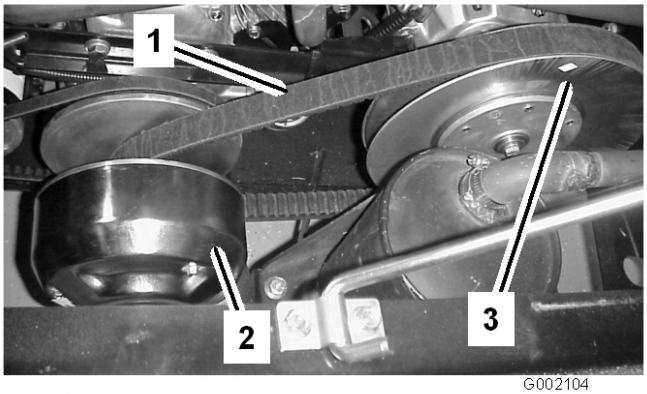

Figure 52

1. Drive belt
2. Primary clutch
3. Secondary clutch

Replacing the Drive Belt

1. Rotate and route the belt over the secondary clutch (Figure 52).
2. Remove the belt from the primary clutch (Figure 52).
3. To replace the belt, reverse the procedure.

Adjusting the Starter Generator Belt

Check the tension of the starter generator belt after the first day of operation and every 200 operating hours thereafter.

1. Park the machine on a level surface, set the parking brake, turn the ignition off, and remove the key.
2. Loosen the starter generator pivot bolt (Figure 53).

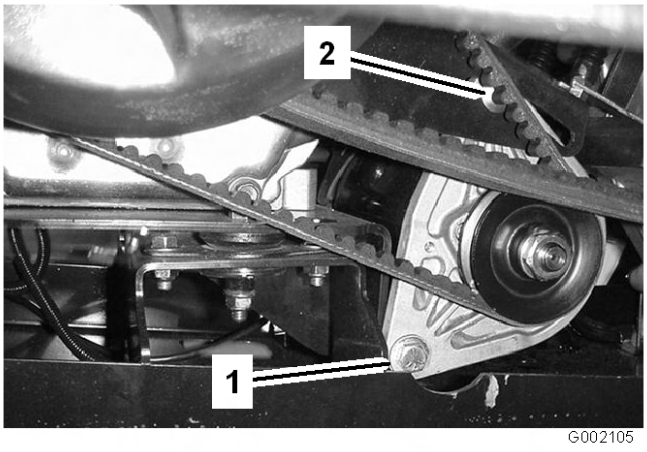

Figure 53

1. Generator pivot bolt
2. Adjusting carriage bolt

3. Wedge a pry bar between the engine mount and starter. Loosen the nut on the adjusting carriage bolt (Figure 53).
4. Tilt the starter in the slot until the belt flexes 1/4 inch (6 mm) with 10 lb (44.5 N) of force.
5. Tighten the carriage bolt nut and remove the pry bar. Tighten the starter generator pivot bolt (Figure 53).

Cleaning

Washing the Vehicle

The vehicle should be washed as needed. Use water alone or with a mild detergent. A rag may be used, however the hood will loose some of its luster.

Important: Pressurized water is not recommended when washing the machine. It may damage the electrical system, loosen important decals, or wash away necessary grease at friction points. Avoid excessive use of water, especially near the control panel, engine, and battery.

Storage

1. Position the machine on a level surface, set the parking brake, stop the engine, and remove the ignition key.
2. Clean dirt and grime from the entire machine, including the outside of the engine's cylinder head fins and blower housing.

   Important: You can wash the machine with mild detergent and water. Do not use high pressure water to wash the machine. Pressure washing may damage the electrical system or wash away necessary grease at friction points. Avoid excessive use of water, especially near the control panel, lights, engine, and the battery.
3. Inspect the brakes; refer to Inspecting the Brakes in Brake Maintenance, page 41.
4. Service the air cleaner; refer to Servicing the Air Cleaner in Engine Maintenance, page 31.
5. Grease the machine; refer to Lubrication, page 30.
6. Change the engine oil; refer to Servicing Engine Oil in Engine Maintenance, page 31.
7. Check the tire pressure; refer to Checking the Tire Pressure in Drive System Maintenance, page 36.
8. For storage over 30 days, prepare the fuel system as follows:
   A. Add a petroleum based stabilizer/conditioner to fuel in the tank.

      Follow mixing instructions from stabilizer manufacturer. (1 oz. per gallon). Do not use an alcohol based stabilizer (ethanol or methanol).

      Note: A fuel stabilizer/conditioner is most effective when mixed with fresh gasoline and used at all times.
   B. Run the engine to distribute conditioned fuel through the fuel system (5 minutes).
   C. Stop the engine, allow it to cool, and drain the fuel tank.
   D. Restart the engine and run it until it stops.
   E. Choke the engine.
   F. Start and run the engine until it will not start again.
   G. Dispose of fuel properly. Recycle as per local codes.

      Important: Do not store stabilizer/conditioned gasoline over 90 days
9. Remove the spark plugs and check their condition; refer to Changing Spark Plugs in Engine Maintenance, page 31.
10. With the spark plugs removed from the engine, pour two tablespoons of engine oil into the spark plug hole.
11. Use the electric starter to crank the engine and distribute the oil inside the cylinder.
12. Install the spark plugs and tighten to recommended torque; refer to Changing Spark Plugs in Engine Maintenance, page 31.

    Note: Do not install the wire on the spark plug(s).
13. Remove the battery from the chassis, check the electrolyte level, and charge it fully; refer to Servicing the Battery in Electrical System Maintenance, page 34.

    Note: Do not connect the battery cables to the battery posts during storage.

    Important: The battery must be fully charged to prevent it from freezing and being damaged at temperatures below 32 degrees F (0 degrees C). A fully charged battery maintains its charge for about 50 days at temperatures lower than 40 degrees F (4 degrees C). If the temperatures will be above 40 degrees F (4 degrees C), check the water level in the battery and charge it every 30 days.
14. Check and tighten all bolts, nuts, and screws. Repair or replace any part that is damaged.
15. Paint all scratched or bare metal surfaces.

    Paint is available from your Authorized Service Dealer.
16. Store the machine in a clean, dry garage or storage area.
17. Remove the ignition key and put it in a safe place out of the reach of children.
18. Cover the machine to protect it and keep it clean.

Schematics

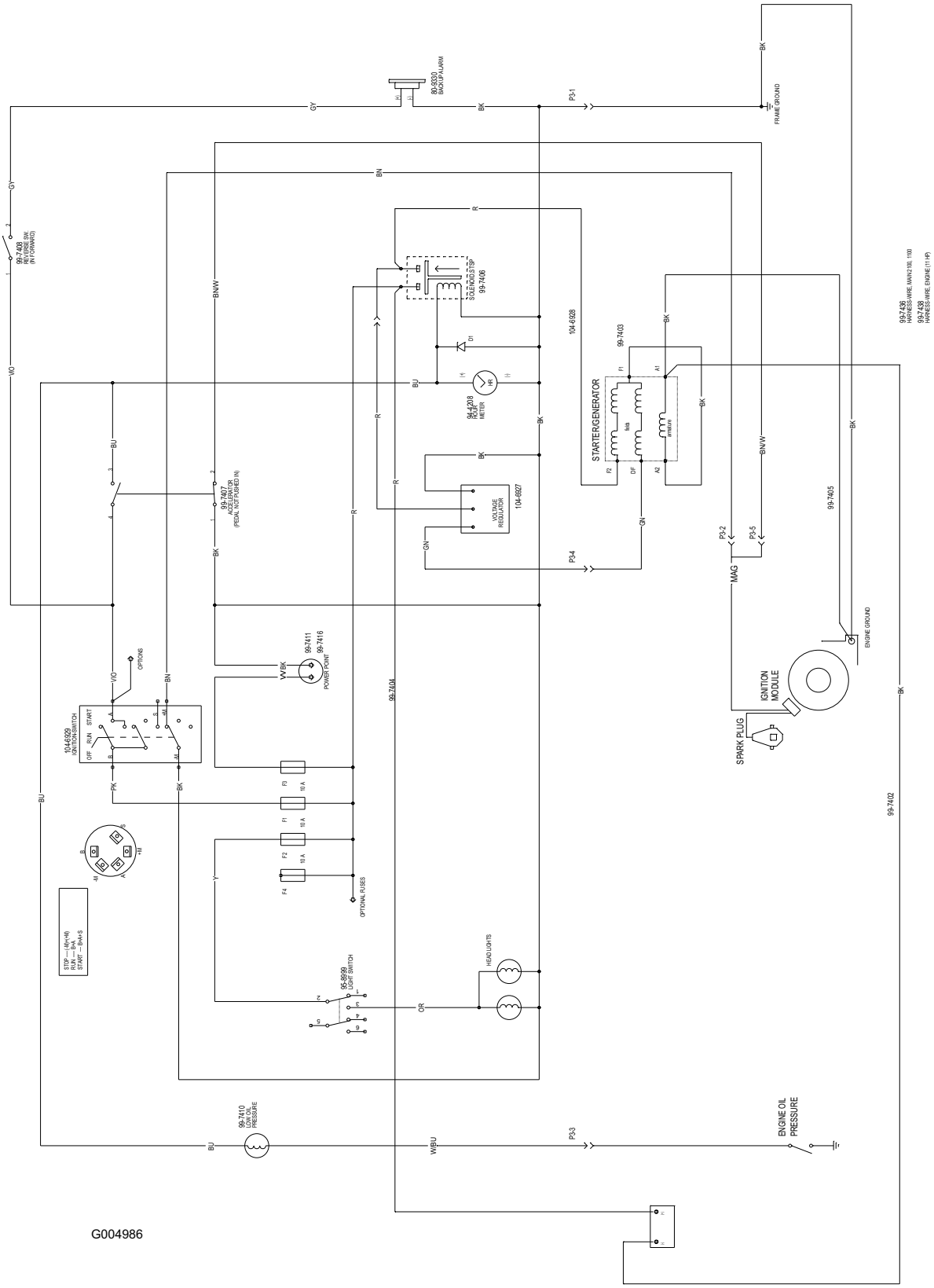

Electrical Schematic (Rev. A)

The Toro General Commercial Products Warranty

A Two-Year Limited Warranty

Conditions and Products Covered

The Toro® Company and its affiliate, Toro Warranty Company, pursuant to an agreement between them, jointly warrant your Toro Commercial Product ("Product") to be free from defects in materials or workmanship for two years or 1500 operational hours*, whichever occurs first. Where a warrantable condition exists, we will repair the Product at no cost to you including diagnosis, labor, parts, and transportation. This warranty begins on the date the Product is delivered to the original retail purchaser.

* Product equipped with hour meter

Instructions for Obtaining Warranty Service

You are responsible for notifying the Commercial Products Distributor or Authorized Commercial Products Dealer from whom you purchased the Product as soon as you believe a warrantable condition exists.

If you need help locating a Commercial Products Distributor or Authorized Dealer, or if you have questions regarding your warranty rights or responsibilities, you may contact us at:

Toro Commercial Products Service Department
Toro Warranty Company
8111 Lyndale Avenue South
Bloomington, MN 55420-1196
952-888-8801 or 800-982-2740
E-mail: commercial.service@toro.com

Owner Responsibilities

As the Product owner, you are responsible for required maintenance and adjustments stated in your operator's manual. Failure to perform required maintenance and adjustments can be grounds for disallowing a warranty claim.

Items and Conditions Not Covered

Not all product failures or malfunctions that occur during the warranty period are defects in materials or workmanship. This express warranty does not cover the following:

- Product failures which result from the use of non-Toro replacement parts, or from installation and use of add-on, modified, or unapproved accessories
- Product failures which result from failure to perform required maintenance and/or adjustments
- Product failures which result from operating the Product in an abusive, negligent or reckless manner
- Parts subject to consumption through use unless found to be defective. Examples of parts which are consumed, or used up, during normal Product operation include, but are not limited to, blades, reels, bedknives, tines, spark plugs, castor wheels, tires, filters, belts, and certain sprayer components such as diaphragms, nozzles, and check valves, etc.
- Failures caused by outside influence. Items considered to be outside influence include, but are not limited to, weather, storage practices, contamination, use of unapproved coolants, lubricants, additives, or chemicals, etc.
- Normal "wear and tear" items. Normal "wear and tear" includes, but is not limited to, damage to seats due to wear or abrasion, worn painted surfaces, scratched decals or windows, etc.

Parts

Parts scheduled for replacement as required maintenance are warranted for the period of time up to the scheduled replacement time for that part.

Parts replaced under this warranty become the property of Toro. Toro will make the final decision whether to repair any existing part or assembly or replace it. Toro may use factory remanufactured parts rather than new parts for some warranty repairs.

General Conditions

Repair by an Authorized Toro Distributor or Dealer is your sole remedy under this warranty.

Neither The Toro® Company nor Toro Warranty Company is liable for indirect, incidental or consequential damages in connection with the use of the Toro Products covered by this warranty, including any cost or expense of providing substitute equipment or service during reasonable periods of malfunction or non-use pending completion of repairs under this warranty. Except for the Emissions warranty referenced below, if applicable, there is no other express warranty. All implied warranties of merchantability and fitness for use are limited to the duration of this express warranty.

Some states do not allow exclusions of incidental or consequential damages, or limitations on how long an implied warranty lasts, so the above exclusions and limitations may not apply to you.

This warranty gives you specific legal rights, and you may also have other rights which vary from state to state.

Note regarding engine warranty: The Emissions Control System on your Product may be covered by a separate warranty meeting requirements established by the U.S. Environmental Protection Agency (EPA) and/or the California Air Resources Board (CARB). The hour limitations set forth above do not apply to the Emissions Control System Warranty. Refer to the Engine Emission Control Warranty Statement printed in your *Operator's Manual* or contained in the engine manufacturer's documentation for details.

Countries Other than the United States or Canada

Customers who have purchased Toro products exported from the United States or Canada should contact their Toro Distributor (Dealer) to obtain guarantee policies for your country, province, or state. If for any reason you are dissatisfied with your Distributor's service or have difficulty obtaining guarantee information, contact the Toro importer. If all other remedies fail, you may contact us at Toro Warranty Company.