Form No. 3358-365 Rev A

Recycler® Conversion Kit

for a Z597-D Z Master with a 52in Rear Discharge Mower

Model No. 114–1820

Installation Instructions

Note: Determine the left and right sides of the machine from the normal operating position.

Installation

Loose Parts

Use the chart below to verify that all parts have been shipped.

Procedure	Description	Qty.	Use
1	No parts required	–	Prepare the mower.
2	No parts required	–	Remove the existing blades.
3	Center baffle Carriage bolt, (3/8 x 1 inch) Locknut, (3/8 inch)	1 2 2	Install the center baffle.
4	Right baffle Left baffle Carriage bolt, (3/8 x 1 inch) Locknut, (3/8 inch) Carriage bolt, (3/8 x 1-1/4 inches)	1 1 5 6 1	Install the left and right baffles.
5	Kicker Carriage bolt, (3/8 x 1 inch) Locknut, (3/8 inch)	3 6 6	Install the kickers.
6	Blades	3	Install the Recycler® Blades

1

Preparing the Mower

No Parts Required

Procedure

1. Thoroughly clean mower deck. All debris must be removed to ensure baffles will fit properly against mower deck.
2. Repair all bent or damaged areas of mower deck and replace any missing parts.

2

Removing the Existing Blades

No Parts Required

Procedure

1. Remove the 3 existing blades from the mower deck. Retain the blades for use in rear discharge mode (Figure 1).

© 2007—The Toro® Company
8111 Lyndale Avenue South
Bloomington, MN 55420

Register at www.Toro.com.

Original Instructions (EN)
Printed in the USA.
All Rights Reserved

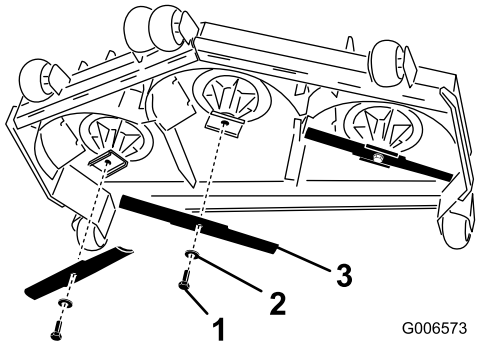

Figure 1

1. Blade bolt
2. Curved washer
3. Blade

2. Remove the belt covers from the top of the mower deck.

3

Installing the Center Baffle

Parts needed for this procedure:

1	Center baffle
2	Carriage bolt, (3/8 x 1 inch)
2	Locknut, (3/8 inch)

Procedure

Note: All holes exist in the mower deck for installing the new baffles.

Note: Loosely install the baffles to align the baffles with the existing holes in the mower.

1. Position the center baffle into the mower.
2. Loosely install the center baffle to the mower deck with 2 carriage bolts (3/8 x 1 inch) and 2 locknuts (3/8 inch) (Figure 2).

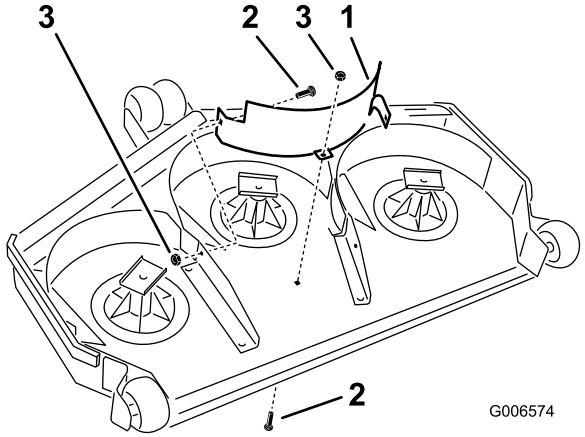

Figure 2

1. Center baffle
2. Carriage bolt (3/8 x 1 inch)
3. Locknut (3/8 inch)

4

Installing the Left and Right Baffles

Parts needed for this procedure:

1	Right baffle
1	Left baffle
5	Carriage bolt, (3/8 x 1 inch)
6	Locknut, (3/8 inch)
1	Carriage bolt, (3/8 x 1-1/4 inches)

Procedure

Note: All holes exist in the mower deck for installing the new baffles.

Note: Loosely install the baffles to align the baffles with all existing holes in the mower.

1. Position the right baffle into the mower.
2. Loosely install the right baffle to the mower deck with 2 carriage bolts (3/8 x 1 inch) and 2 locknuts (3/8 inch) (Figure 3). Make sure the bolt heads are on the inside of the cutting chamber.
3. Loosely install the right baffle to the center baffle with 1 carriage bolt (3/8 x 1 inch) and alocknut (3/8 inch) (Figure 3).
4. Install the left baffle into the mower.
5. Loosely install the left baffle to the mower deck with 2 carriage bolts (3/8 x 1 inch) and 2 locknuts (3/8 inch) (Figure 3).

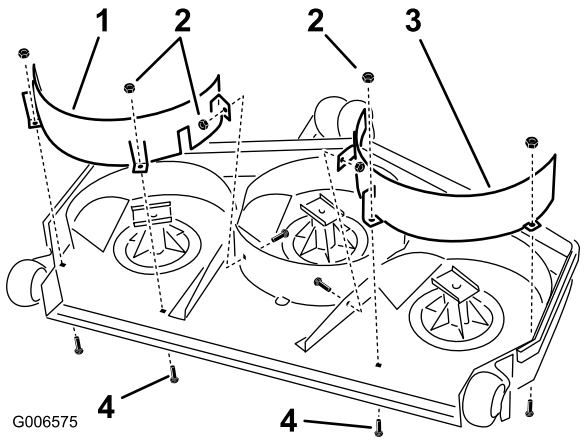

Figure 3

1. Right baffle
2. Locknut (3/8 inch)
3. Left baffle
4. Carriage bolt (3/8 x 1 inch)

6. Loosely install the left baffle and the center baffle to the mower deck baffle with a carriage bolt (3/8 x 1-1/4 inches) and a locknut (3/8 inch) (Figure 3).

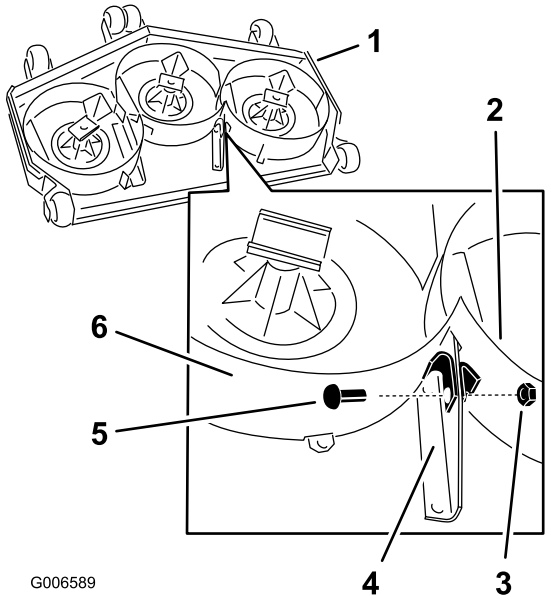

Figure 4

1. Mower deck
2. Left baffle
3. Locknut (3/8 inch)
4. Mower deck baffle
5. Carriage bolt (3/8 x 1-1/4 inches)
6. Center baffle

5

Installing the Kickers

Parts needed for this procedure:

3	Kicker
6	Carriage bolt, (3/8 x 1 inch)
6	Locknut, (3/8 inch)

Procedure

Note: All holes exist in the mower deck for installing the kickers.

Install the 3 kickers to the mower deck in the positions shown with 6 carriage bolts (3/8 x 1 inch) and 6 locknuts (3/8 inch) (Figure 5).

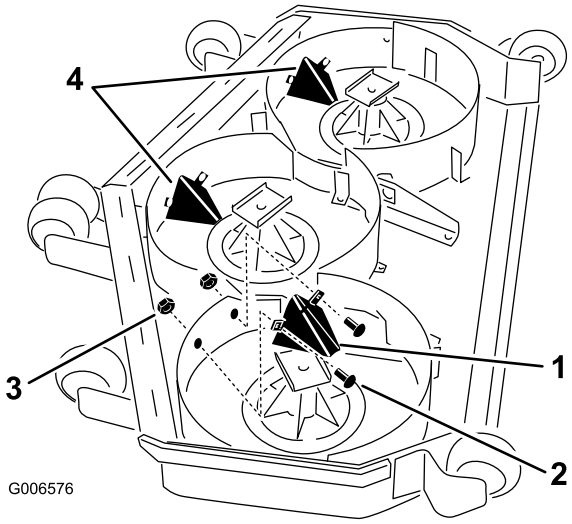

Figure 5

1. Kicker
2. Carriage bolt (3/8 x 1 inch)
3. Locknut (3/8 inch)
4. Kicker installed

6

Installing the Recycler® Blades

Parts needed for this procedure:

3	Blades

Procedure

1. Install the new blades.

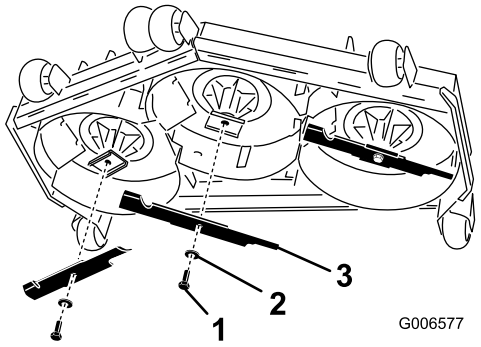

Figure 6

1. Blade bolt
2. Curved washer
3. Recycler blade

2. Tighten all fasteners.
3. Rotate the blades to ensure there is clearance between the blade tips and baffles.

Operation

Selecting the Proper Height-of-Cut

Remove approximately one inch or no more than 1/3 of the grass blade when cutting. In exceptionally lush and dense grass you may need to raise the height-of-cut setting or convert to rear discharge.

Mowing in Extreme Conditions

Air is required to cut and recut grass clippings in the mower housing, so do not set the height-of-cut too low or totally surround the housing by uncut grass. Always try to have one side of the mower housing free from uncut grass, allowing air to be drawn into the housing. When making an initial cut through the center of an uncut area, operate the machine slower and back up if the mower starts to clog.

Mowing at Proper Intervals

Under most normal conditions you will need to mow every 4–5 days. However, grass grows at different rates at different times. Thus, in order to maintain the same height-of-cut, which is a good practice, you'll need to cut more frequently in early spring; as the grass growth rate slows in mid summer, cut only every 8–10 days. If you are unable to mow for an extended period due to weather conditions or other reasons, convert to rear discharge or mow first with the height-of-cut at a high level; then mow again 2–3 days later with a lower height setting.

Mowing with Sharp Blades

A sharp blade cuts cleanly and without tearing or shredding the grass. A dull blade will tear and shred the grass. Tearing and shredding causes the grass to turn brown at the edges which impairs growth and increases susceptibility to disease.

After Operating

To ensure optimum performance, clean the underside of the mower housing after each use. If residue is allowed to build up in the mower housing, cutting performance will decrease.



Count on it.