FORM NO. 3314-947

TORO®

MODEL NO. 38570-2000001 & UP

PARTS CATALOG

828 SNOWTHROWER

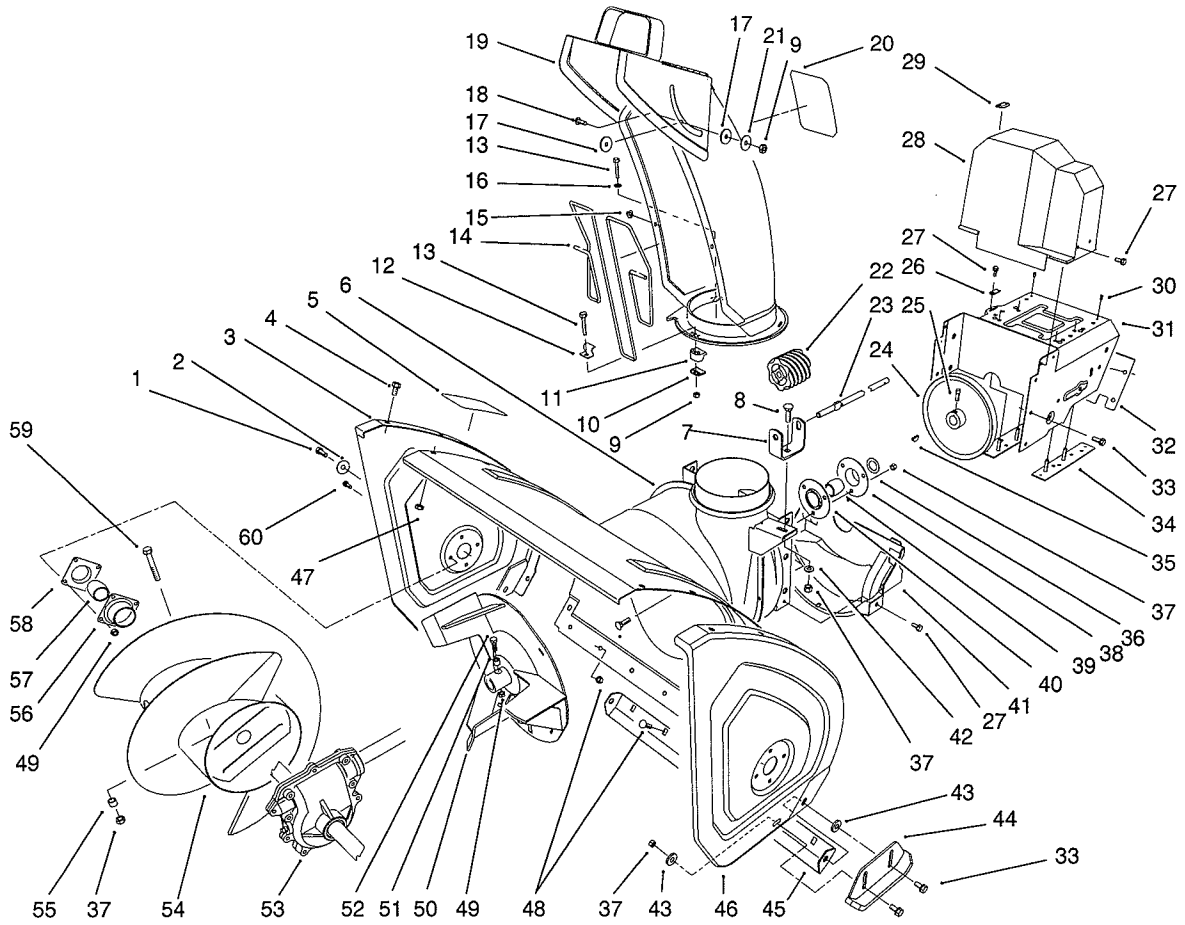

C-0045

HOUSING & CHUTE ASSEMBLY

Ref. No.	Part No.	Description	No. Used
1	323-6	Screw - Hex Hd.	2
2	3-0750	Washer - Retaining	2
3	66-7821	Plate - Side R.H.	1
4	3234-28	Screw - Hex Flange Hd.	10
5	53-7670	Decal - Danger Auger	1
6	62-0721	Housing - 28"	1
7	63-2180	Bracket - Gear	1
8	3230-2	Bolt - Carriage	1
9	3296-2	Nut - Lock	4
10	63-2670	Plate - Chute Retainer	3
11	62-1430	Retainer - Chute	3
12	63-3130	Clip - Chute Guard	1
13	3274-13	Screw - Machine	3
14	63-3020	Guard - Chute	1
15	3290-326	Nut - Push	2
16	3256-14	Washer - Flat	1

Ref. No.	Part No.	Description	No. Used
17	63-2900	Washer - Plastic	2
18	32122-32	Screw	1
19	62-0840	Chute Assembly	1
20	63-3740	Decal - Danger Chute	1
21	3256-61	Washer - Flat	1
22	62-0820	Gear - Worm	1
23	62-1720	Rod - Chute Gear	1
24	62-1300	Pulley - Impeller	1
25	3242-4	Screw - Set Sq. Hd.	2
26	63-2300	Retainer - Cable	1
27	32144-4	Screw - Hex Flange Hd.	6
28	63-2080	Cover - Belt (Upper)	1
29	63-3290	Cover - Cable	1
30	3269-23	Rivet	4
31	66-6981	Frame - Engine	1
32	62-1440	Cover - Engine Frame	1

©The TORO Company - 1991

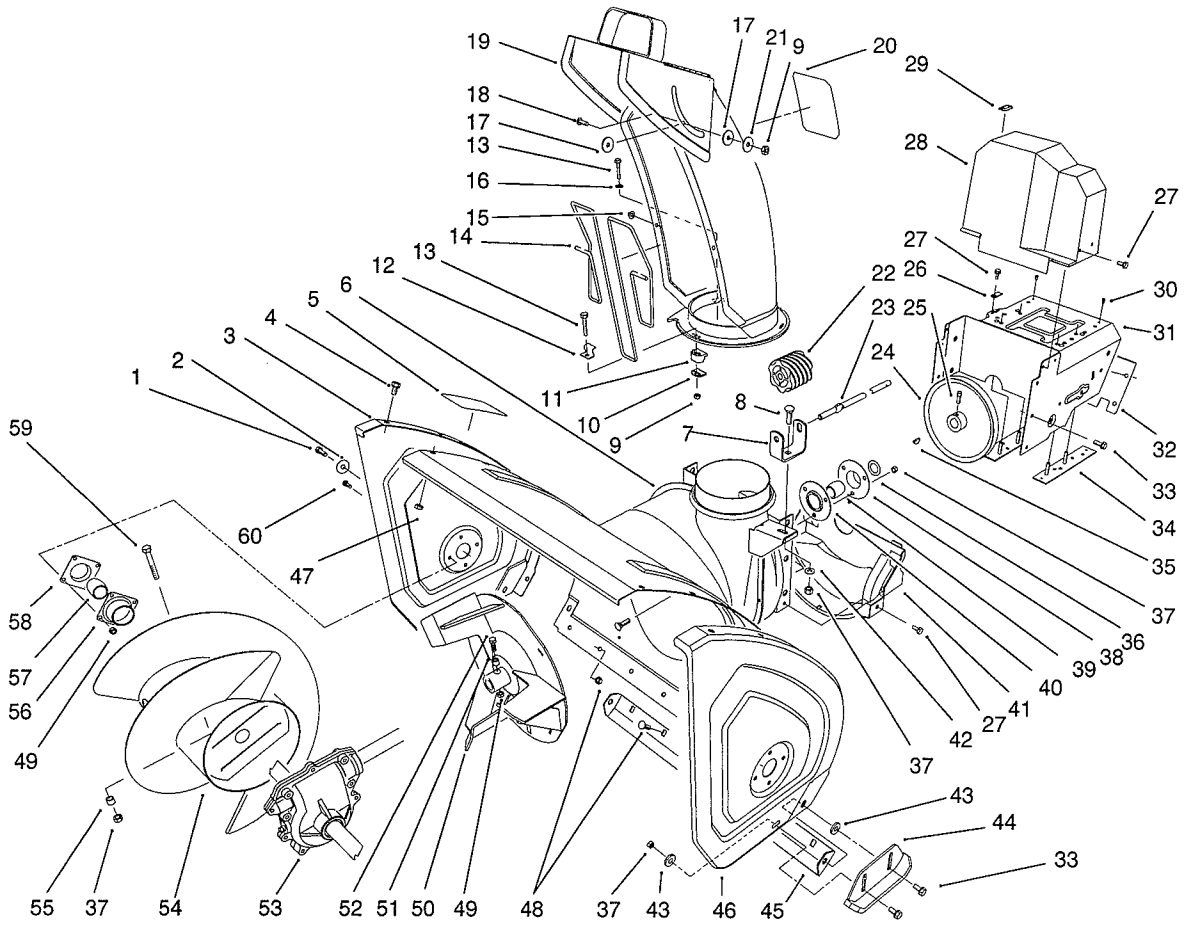

C-0045

HOUSING ASSEMBLY (Continued)

Ref. No.	Part No.	Description	No. Used
33	3234-5	Screw - Hex. Washer Hd.	10
34	68-4170	Plate - Engine Stud L.H.	1
*	68-4160	Plate - Engine Stud R.H.	1
35	3257-23	Key - Woodruff	1
36	252-80	Washer - Thrust	1
37	3296-29	Nut - Lock	12
38		Flange - Bearing (Rear)	1
39	63-3450	Bearing - Impeller	1
40		Flange - Bearing (Front)	1
41	62-1400	Cover - Belt (Lower)	1
42	3256-23	Washer - Flat	1
43	52-2861	Washer	4
44	74-1440	Skid Assembly	2
45	66-7761	Blade - Scraper	1
46	66-7831	Plate - Side L.H.	1
47	3296-47	Nut - Lock	12
48	3230-23	Screw - Carriage	10

Ref. No.	Part No.	Description	No. Used
49	3296-42	Nut - Lock	10
50	66-7920	Impeller	1
51	66-8010	Spacer	2
52	321-44	Screw - Hex. Hd.	2
53	74-1561	Auger Gearbox Assembly	1
54	63-2751	Auger - R.H.	1
*	63-2761	Auger - L.H.	1
55	25-5090	Spacer - Auger Hub	2
56	20-0990	Flange - Bearing (Inner)	2
57	20-0980	Bearing - Auger	2
58	20-1000	Flange - Bearing (Outer)	2
59	17-7030	Bolt - Auger	2
60	321-3	Screw - Hex Hd.	8
*	12-8789	Impeller Bearing Assembly (Incl. Ref. #38-40)	1
*	12-8949	Loose Parts	1

*Not Illustrated

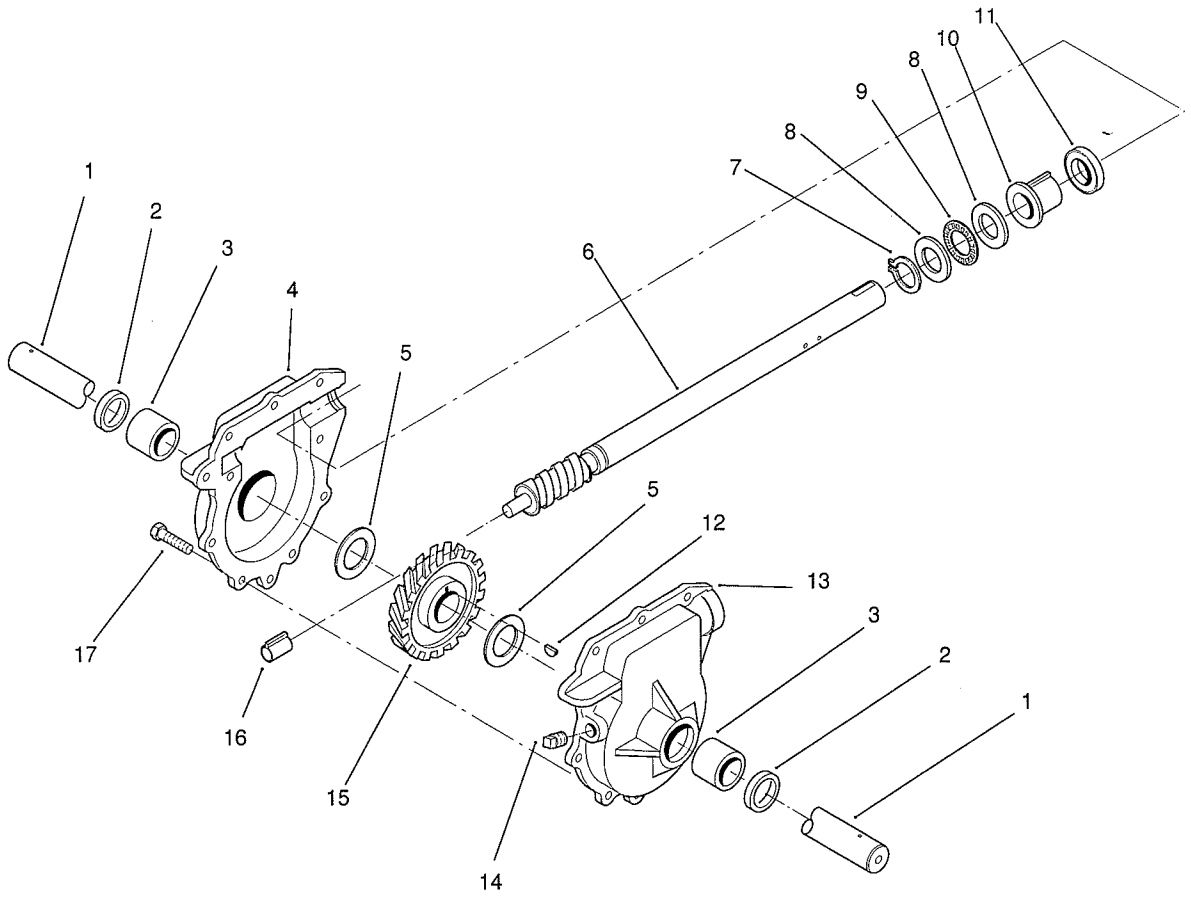

C-1015

28" AUGER GEARCASE ASSEMBLY NO. 74-1561

Ref. No.	Part No.	Description	No. Used
1	62-1531	Shaft - Auger (28")	1
2	7-0045	Seal - Oil	2
3	256-237	Bushing - Sleeve	2
4	74-1580	Gearcase Assembly - R.H. (Incl. Ref. # 2-3)	2
5	252-71	Bearing - Thrust	2
6	66-7811	Shaft - Impeller	1
7	32151-33	Ring - Snap	1
8	252-78	Washer - Thrust	2
9	252-76	Bearing - Thrust	1

Ref. No.	Part No.	Description	No. Used
10	37-6560	Bushing - Input	1
11	253-149	Seal - Input	1
12	3257-10	Key - Woodruff	1
13	71-1570	Gearcase Assembly - L.H. (Incl. Ref. # 2-3)	1
14	281-1	Plug - Pipe Sq. Hd.	1
15	62-0120	Gear - Helical	1
16	62-1150	Bushing - Worm	1
17	32144-110	Screw - Hex Washer Hd.	9
*	505-129	Sealant - 100g Tube	1

*Not Illustrated

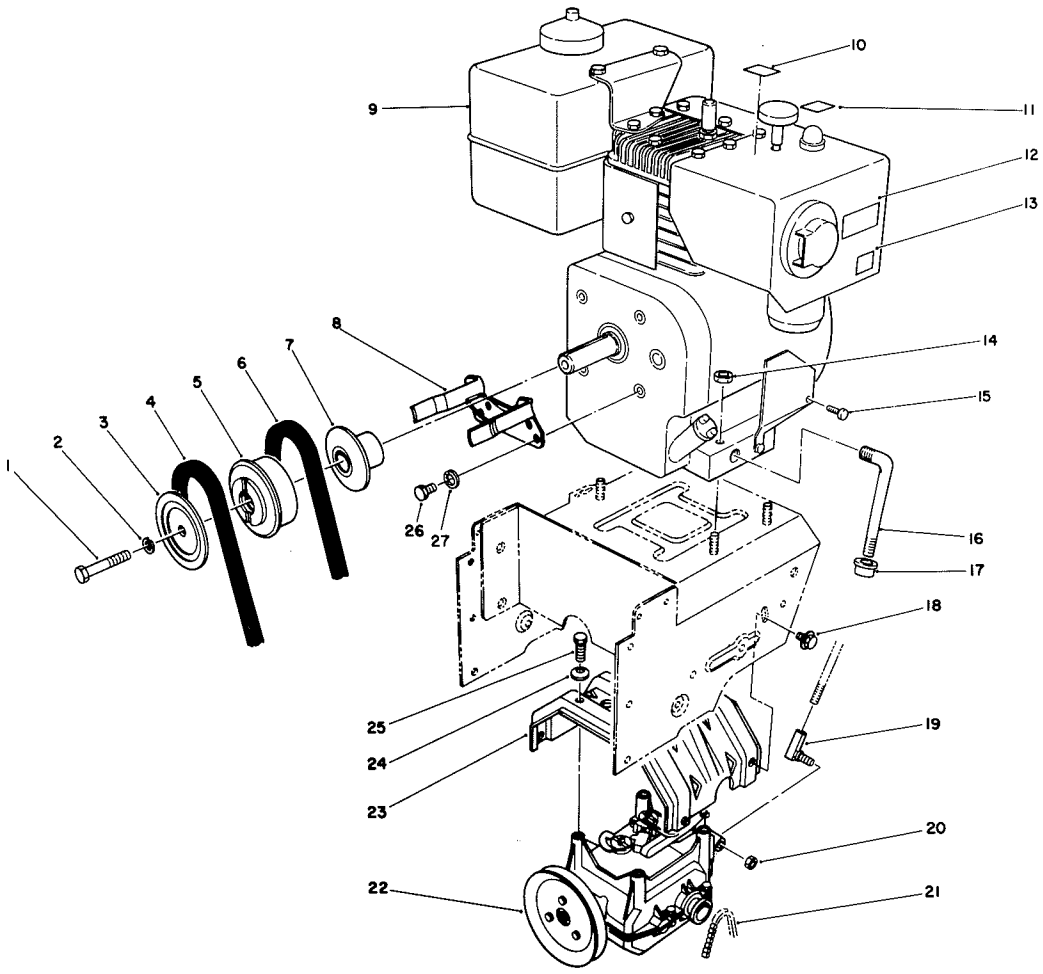

C-0050

ENGINE ASSEMBLY

Ref. No.	Part No.	Description	No. Used
1	3212-8	Screw - Hex. Hd.	1
2	3253-6	Washer - Lock	1
3	62-0940	Sheave Half - Impeller	1
4	63-2964	Belt - Impeller	1
5	62-0930	Hub - Sheave	1
6	63-2953	Belt - Traction	1
7	62-0920	Sheave Half - Traction	1
8	68-7510	Guide - Belt	1
†9		Engine - Briggs & Stratton (Model No. 190406 Type No. 3104-01)	1
10	63-2340	Decal - Throttle	1
11	63-2320	Decal - Primer	1
12	66-6840	Decal - Hot Surface	1
13	63-2360	Decal - Choke	1

Ref. No.	Part No.	Description	No. Used
14	32128-20	Nut - Lock	4
15	2210-250	Screw - Hex. Washer Hd.	1
16	67-9301	Pipe - Oil Drain	1
17	288-10	Cap - Pipe	1
18	3234-7	Screw - Hex Flange Hd.	4
19	63-2640	Joint- Ball	1
20	3296-39	Nut - Lock	1
21	63-2930	Chain - Drive	1
22	66-8030	Transmission Assembly	1
23	63-2990	Frame - Transmission	1
24	3290-461	Washer - Belleville	4
25	11-0590	Screw - Hex Hd.	4
26	3210-1	Screw - Hex Hd.	2
27	3253-4	Washer - Lock	2

†Obtain from your local Briggs & Stratton Dealer.

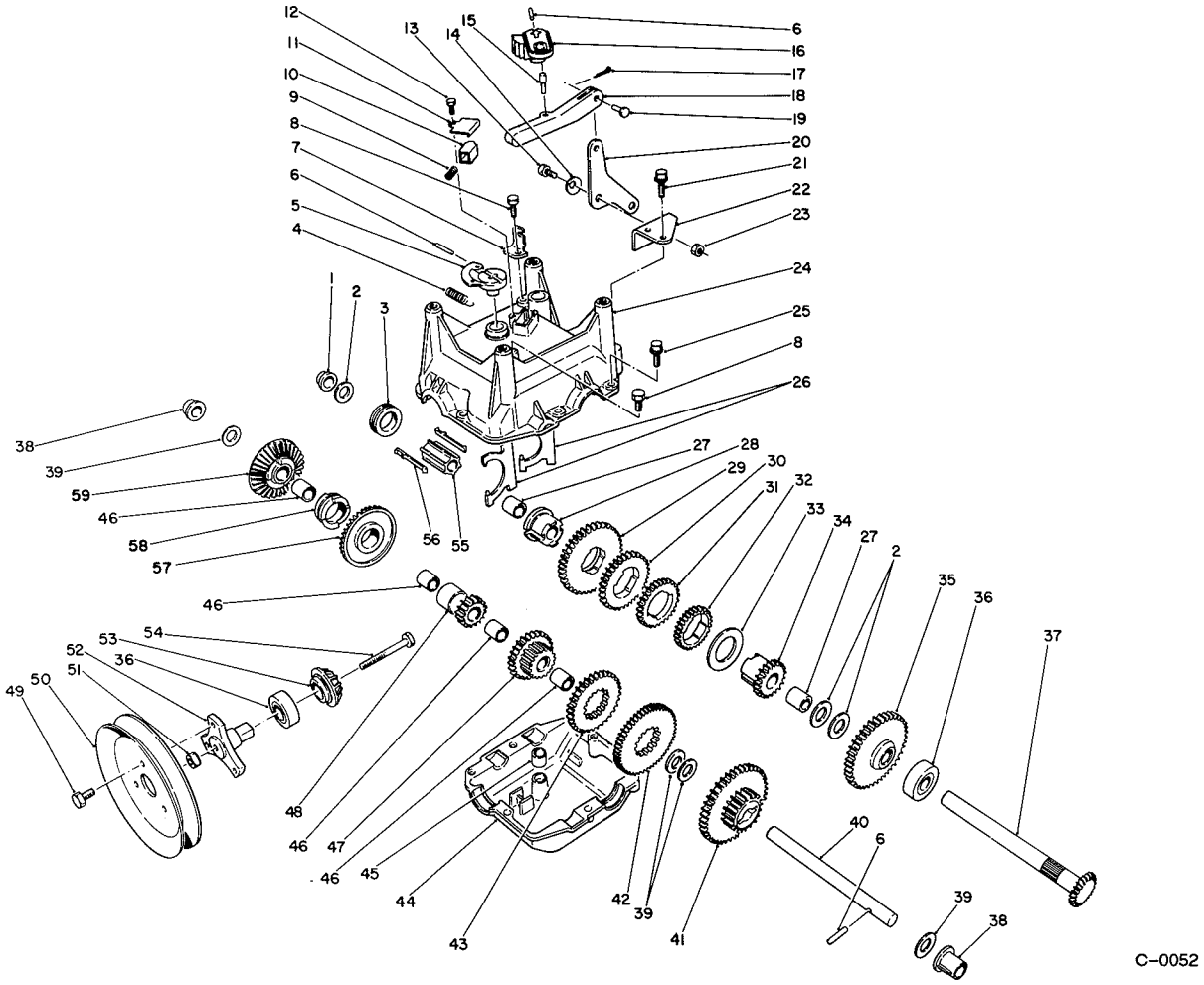

TRANSMISSION ASSEMBLY NO. 66-8030

Ref. No.	Part No.	Description	No. Used
1	62-1180	Bushing - Output (Flange)	1
2	252-59	Washer - Thrust	3
3	62-0430	Collar - Shift (Speed)	1
4	63-2920	Spring - Extension (F/R Return)	1
5	62-0880	Lever - Direction Shift	1
6	32121-106	Pin - Coil	3
7	62-1740	Bracket - Cable	1
8	32144-4	Screw - Self Tapping	2
9	63-2890	Spring - Compression (Detent)	1
10	62-1020	Button - Detent	1
11	62-1690	Cover - Detent	1
12	32104-71	Screw - Pan Hd.	1
13	63-3410	Bolt - Shoulder	1
14	3290-477	Washer - Curved	1
15	63-2190	Pin - Gearshift Link	1
16	62-0870	Lever - Gear Shift	1
17	3272-1	Pin - Cotter	1
18	62-0860	Link - Gearshift	1
19	283-3	Pin - Clevis	1
20	63-2600	Bellcrank	1
21	32104-95	Screw - Hex Washer Hd.	2

Ref. No.	Part No.	Description	No. Used
22	62-1190	Bracket - Bellcrank	1
23	3296-42	Nut - Lock	1
24	62-0490	Gear Case - Upper	1
25	32144-86	Screw - Hex Washer Hd.	6
26	62-1040	Yoke-Shift	2
27	62-1350	Bushing - Output	2
28	62-0320	Sleeve	1
29	62-0240	Gear - 45T	1
30	62-0220	Gear - 34T	1
31	62-0200	Gear - 27T	1
32	62-0250	Gear - 29T	1
33	63-2280	Washer - Thrust	1
34	62-0340	Sleeve - Gear 19T	1
35	62-0370	Gear - 41T	1
36	38-7820	Bearing - Ball	2
37	62-1080	Shaft - Output	1
38	62-1170	Bushing - Flange	2
39	257-10	Washer - Thrust	4
40	62-0330	Shaft - Intermediate	1
41	62-0360	Gear - Compound 19T/41T	1
42	62-0260	Gear - 51T	1
43	62-0210	Gear - 33T	1
44	62-0480	Gear Case - Lower	1

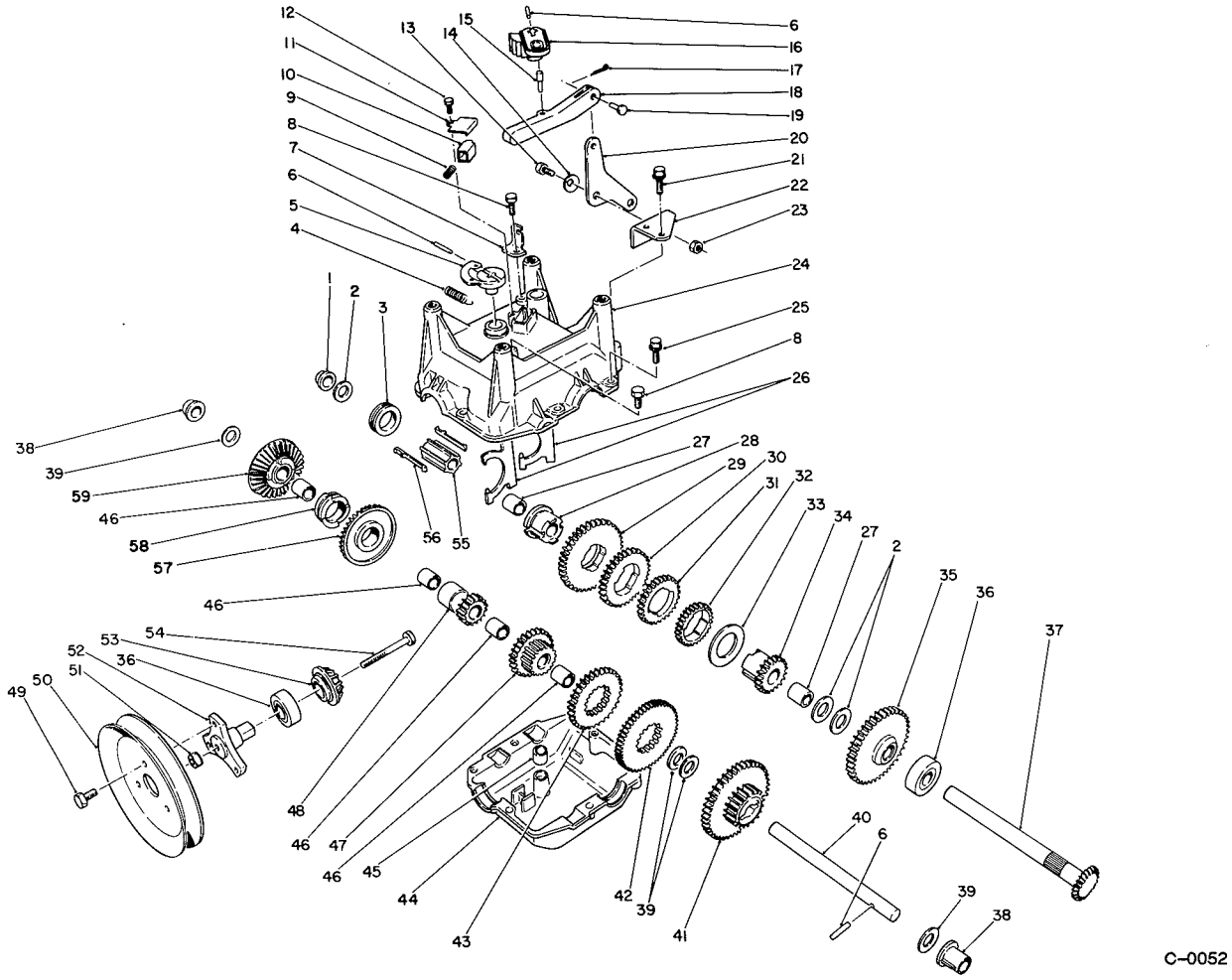

TRANSMISSION ASSEMBLY NO. 66-8030 (Continued)

Ref. No.	Part No.	Description	No. Used
45	29-9570	Bushing - Yoke	1
46	62-1160	Bushing - Intermediate	4
47	68-4310	Gear - 26T	1
48	62-0500	Gear - 15T	1
49	12-3270	Screw	3
50	62-1310	Pulley - Traction	1
51	32128-32	Nut - Flange Lock	1
52	62-0380	Hub - Pulley	1
53	62-0350	Pinion - Bevel 19T	1

Ref. No.	Part No.	Description	No. Used
54	321-15	Screw - Hex Hd.	1
55	68-4320	Sleeve - Shift	1
56	62-0310	Key - Shift	2
57	67-5870	Gear - Bevel 36T	1
58	67-5880	Collar - Shift	1
59	13-3559	Gear - Bevel Reverse 36T (Incl. Ref. #46)	1
*	505-101	Grease - 14.5 oz. Cartridge	1

*Not Illustrated

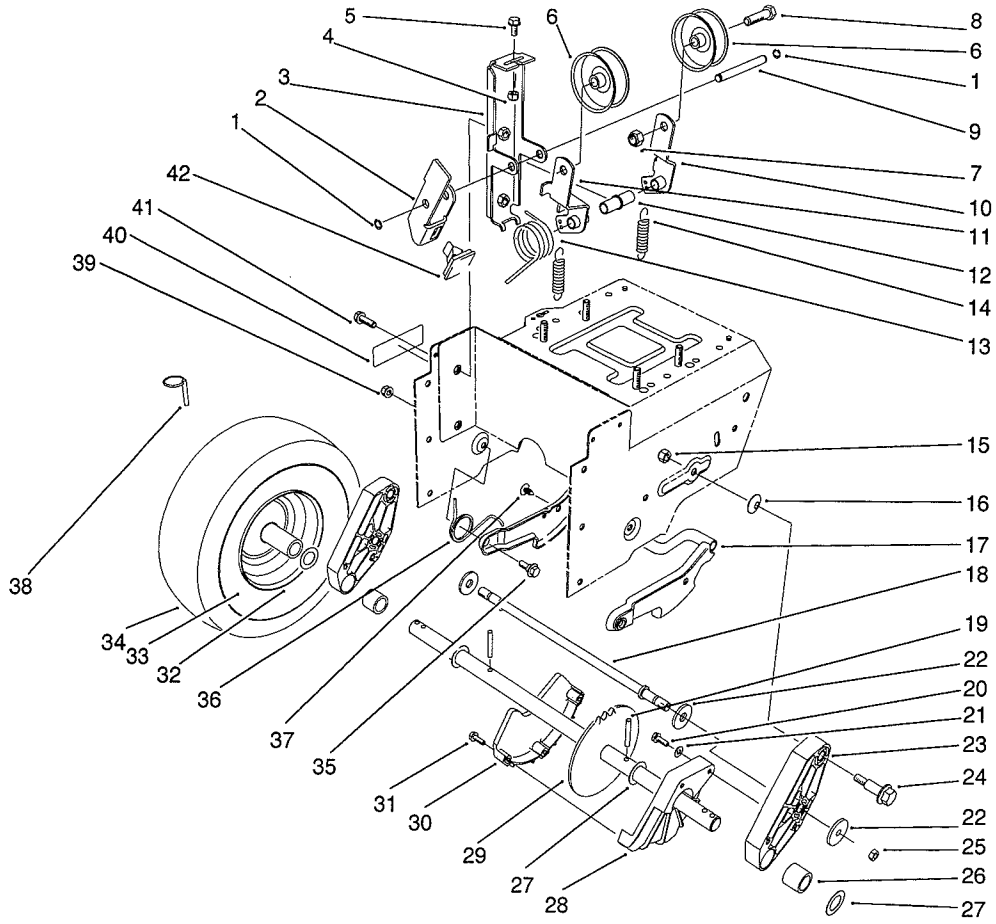

C-0053

TRACTION DRIVE ASSEMBLY

Ref. No.	Part No.	Description	No. Used
1	32120-46	Ring - Retaining	2
2	63-2820	Arm - Brake	1
3	63-2850	Bracket - Idler Arm	1
4	3296-42	Nut - Lock	1
5	3234-13	Screw - Hex. Hd.	1
6	3-4244	Pulley - Idler	2
7	3296-59	Nut - Lock	2
8	323-7	Screw - Hex Hd.	2
9	62-0970	Pin - Idler	1
10	62-1260	Arm - Traction Idler	1
11	62-1280	Arm - Impeller Idler	1
12	62-1210	Bushing - Idler	1
13	63-2881	Spring - Torsion	1
14	63-2870	Spring - Extension	2
15	3296-39	Nut - Lock	2
16	3290-461	Washer - Belleville	2
17	62-0470	Latch - Arm	1
18	66-7720	Rod - Latch	1
19	32121-9	Pin - Roll	2
20	32144-4	Screw - Hex Flange Hd.	2
21	3256-1	Washer - Flat	2
22	63-3340	Washer	4
23	66-7740	Pivot Arm Assembly (Incl. Ref. # 26)	2

Ref. No.	Part No.	Description	No. Used
24	62-1330	Bolt - Shoulder	2
25	3296-23	Nut - Lock	2
26	63-2250	Bushing - Axle	2
27	252-80	Washer - Thrust	4
28	62-1010	Guard - Chain L.H.	1
29	63-2112	Axle Assembly	1
30	62-1000	Guard - Chain R.H.	1
31	32104-121	Screw - Hex Flange Hd.	3
32	241-127	Rim - Wheel	2
33	232-48	Tube - Inner	2
34	231-123	Tire	2
35	5-2490	Bolt - Shoulder	2
36	63-2740	Spring - Torsion	1
37	3290-476	Fastener - Panel	1
38	3290-243	Pin - Klik	2
39	3296-47	Nut - Lock	2
40	66-6860	Decal - Warning	1
41	3234-7	Screw - Hex Flange Hd.	2
42	66-8060	Pad - Brake	1
*	63-3040	Tire Chains Kit (Optional)	1
*	66-6820	Spacer - Tire Chain	2
*		Wheel & Tire Assembly (Incl.Ref.#32-34)	2
*	74-1190	Kit - Weight (Optional)	1

*Not Illustrated

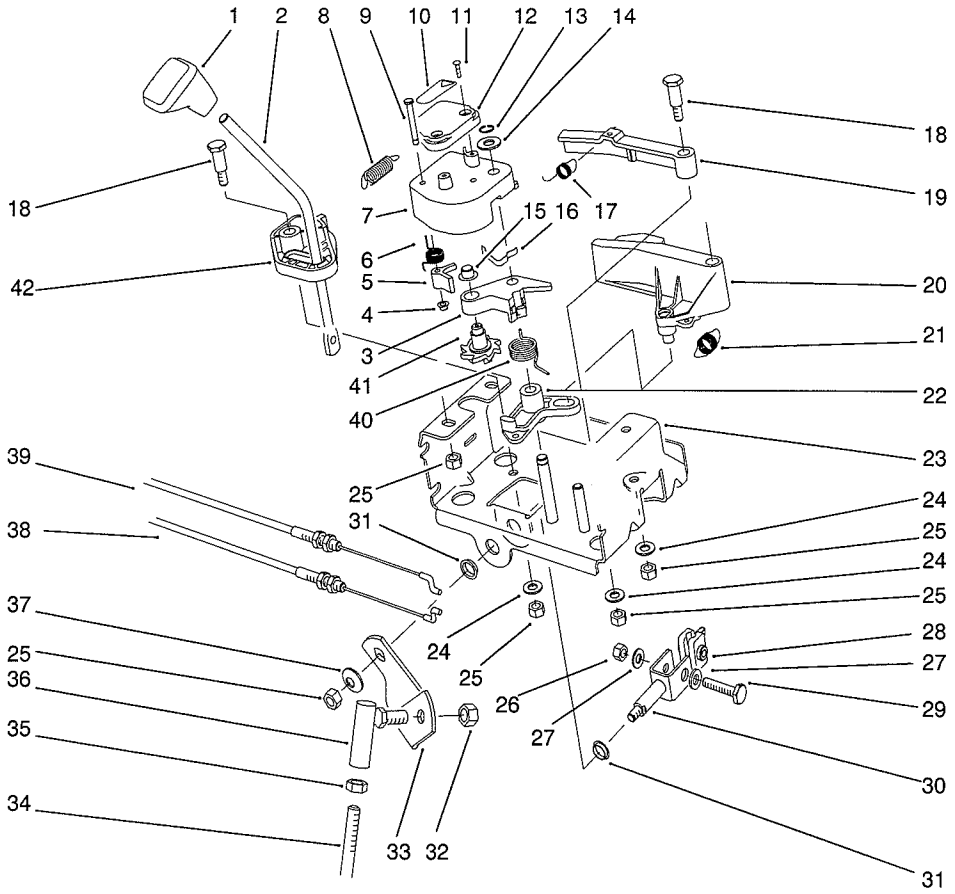

C-0054

TRACTION LINKAGE ASSEMBLY

Ref. No.	Part No.	Description	No. Used
1	62-1290	Knob - Shift	1
2	67-9240	Rod - Shift (Upper)	1
3	62-1110	Lever - Index Wheel	1
4	3290-422	Nut - Push	1
5	62-0180	Tang - Index	1
6	62-1650	Spring - Torsion	1
7	62-1100	Lever - Latch	1
8	63-2220	Spring - Extension	1
9	63-2610	Pin - Tang	1
10	63-2480	Decal - #2	1
11	32104-118	Screw - Pan Hd.	2
12	62-1140	Cover - Latch	1
13	32120-46	Ring - Retaining	1
14	257-9	Washer - Thrust	1
15	3290-320	Nut - Push	1
16	62-1710	Spring - Flat	1
17	63-2240	Spring - Extension	1
18	63-2650	Screw - Shoulder	2
19	62-1700	Lever - Lockout	1
20	62-1130	Lever - Reverse	1
21	63-2230	Spring - Extension	1

Ref. No.	Part No.	Description	No. Used
22	62-1120	Lever - Reverse	1
23	63-2150	Frame - Control	1
24	3256-23	Washer - Flat	3
25	3296-29	Nut - Lock	7
26	3296-42	Nut - Lock	1
27	3256-1	Washer - Flat	2
28	67-9250	Retainer - Shift Rod	1
29	321-9	Screw - Cap Hex. Hd.	1
30	66-7730	Clevis	1
31	256-296	Bushing - Nyliner	2
32	3296-39	Nut - Lock	1
33	63-2630	Bracket - Shift	1
34	63-2830	Rod - Shift (Lower)	1
35	3220-3	Nut - Jam	2
36	63-2640	Joint - Ball	1
37	3290-456	Washer - Belleville	1
38	63-2210	Cable - Gearbox	1
39	63-2200	Cable - Latch	1
40	63-2270	Spring - Torsion	1
41	62-0170	Wheel - Index	1
42	62-1470	Base - Lockout	1

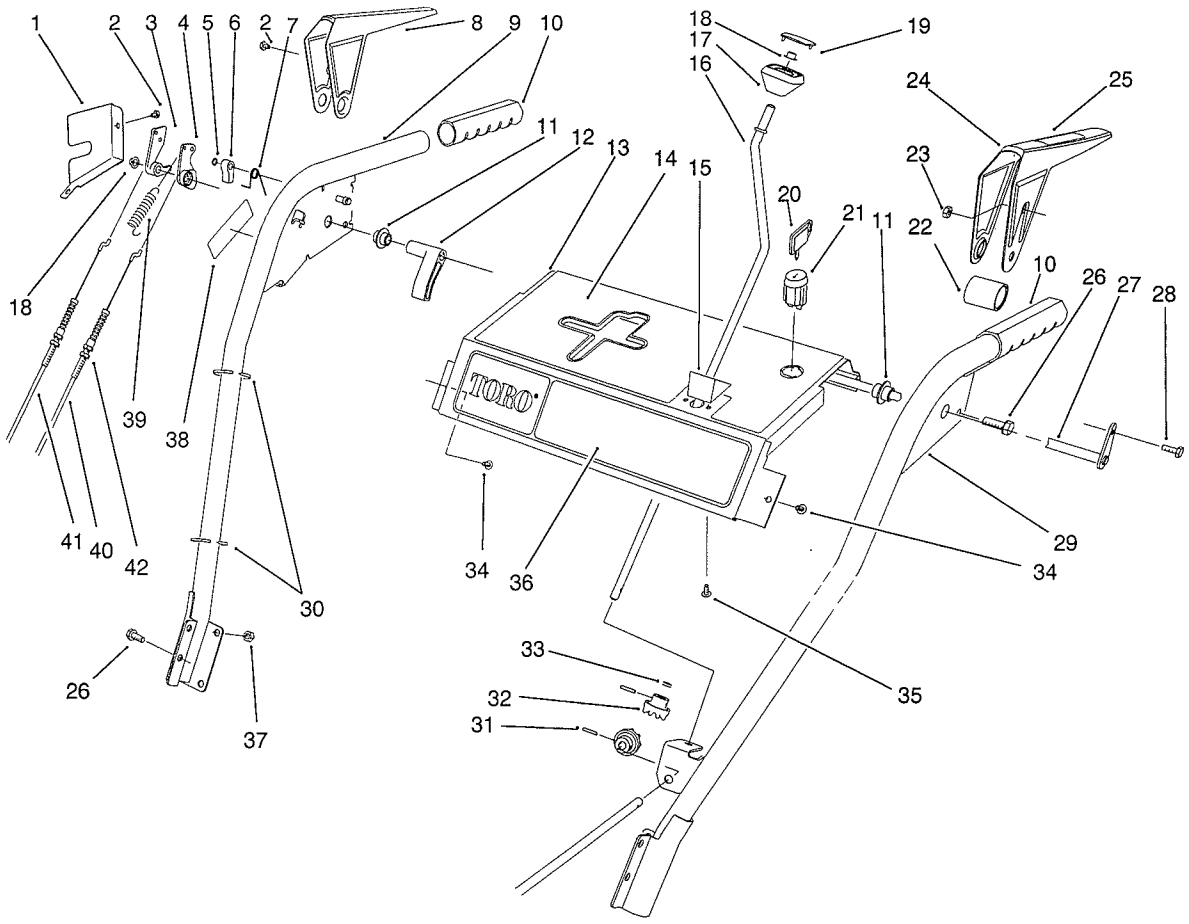

C-0055

HANDLE ASSEMBLY

Ref. No.	Part No.	Description	No. Used
1	63-2170	Cover - Lever Lock	1
2	2210-250	Screw	3
3	62-0300	Tang - Locking	1
4	62-0290	Cam - Release	1
5	32151-66	Ring - Retaining	1
6	62-0280	Latch - Lock	1
7	63-2910	Spring - Torsion	1
8	62-1050	Lever - Impeller	1
9	62-1381	Handle - R.H.	1
10	66-7850	Handlegrip	2
11	62-1070	Bushing - Lever	2
12	62-1640	Lever - Trip	1
13	66-8100	Panel - Control	1
14	66-6850	Decal - Panel Top	1
15	62-1490	Plate - Guide	1
16	63-2160	Rod - Chute Crank	1
17	62-1320	Knob - Chute Control	1
18	3290-320	Nut - Push	3
19	62-1520	Cover - Knob	1
20	63-8360	Key - Switch	1
21	40-5940	Switch - On/Off	1
22	63-3380	Spacer - Traction Lever	1

Ref. No.	Part No.	Description	No. Used
23	3296-2	Nut - Lock	1
24	62-1060	Lever - Traction	1
25	63-3050	Decal - Lever	1
26	3234-7	Screw - Hex Flange Hd.	6
27	63-2030	Rod - Cross	1
28	3290-359	Screw	1
29	66-8091	Handle - L.H.	1
30	3290-378	Tie - Cable	3
31	32121-50	Pin - Roll	2
32	62-1460	Gear - Universal	2
33	62-1230	Washer - Rubber	1
34	32104-76	Screw - Self Tapping	2
35	32104-118	Screw - Pan Hd.	2
36	63-2520	Decal - Panel Front	1
37	3296-47	Nut - Lock	4
38	66-6860	Decal - Warning	1
39	63-2720	Spring - Extension	1
40	63-2710	Cable - Traction	1
41	63-2700	Cable - Impeller	1
42	3296-42	Nut	4
*	63-3420	Harness - Wire	1

*Not Illustrated

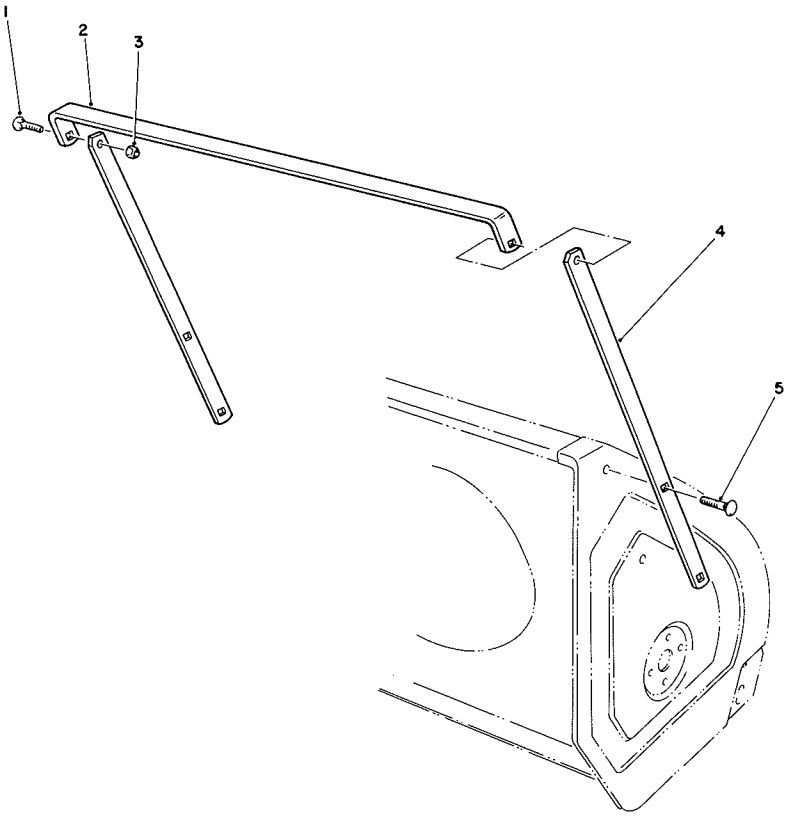

C-0068

DRIFT BREAKER ASSEMBLY (Optional)

Ref. No.	Part No.	Description	No. Used
1	3230-16	Bolt - Carriage	2
†2		Breaker - Top (28")	1
3	3296-29	Nut - Lock	6
†4		Breaker - Side	2

Ref. No.	Part No.	Description	No. Used
5	3230-1	Bolt - Carriage	4
*	66-7970	Drift Breaker Kit (Incl. Ref. #1-5)	1

*Not Illustrated
†Items not sold separately.

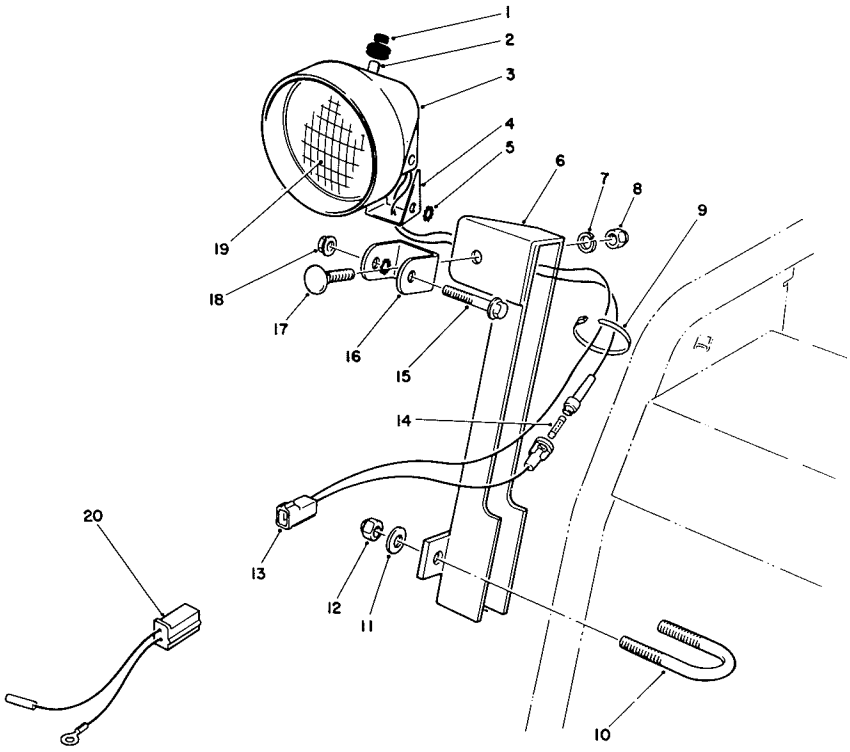

C-0071

LIGHT KIT NO. 66-7940 (Optional)

Ref. No.	Part No.	Description	No. Used
1	218-473	Boot - Switch	1
2	218-553	Switch Assembly	1
3	218-552	Bucket - Headlamp	1
4	218-554	Bracket	1
5	3255-8	Washer - Lock	2
6	68-7110	Mount - Lamp	1
7	3253-21	Washer - Lock	1
8	3217-7	Nut - Hex.	1
9	3290-378	Tie Wrap	2
10	68-7140	Bolt - U	1
11	3256-23	Washer - Flat	2

Ref. No.	Part No.	Description	No. Used
12	3296-29	Nut - Lock	2
13	54-9810	Wire Assembly	1
†14		Fuse - 7-1/2 Amp.	1
15	322-13	Screw - Hex. Flange Hd.	1
16	218-556	Bracket - U	1
17	3231-2	Bolt - Carriage	1
18	32128-35	Nut - Flange Lock	1
19	218-15	Bulb - Sealed Beam	1
20	54-9810	Wire Assembly	1
*	54-9870	Headlamp Assembly (Incl. Ref. #1-5, 7-8 & 13-19)	1

*Not Illustrated
†Obtain Locally

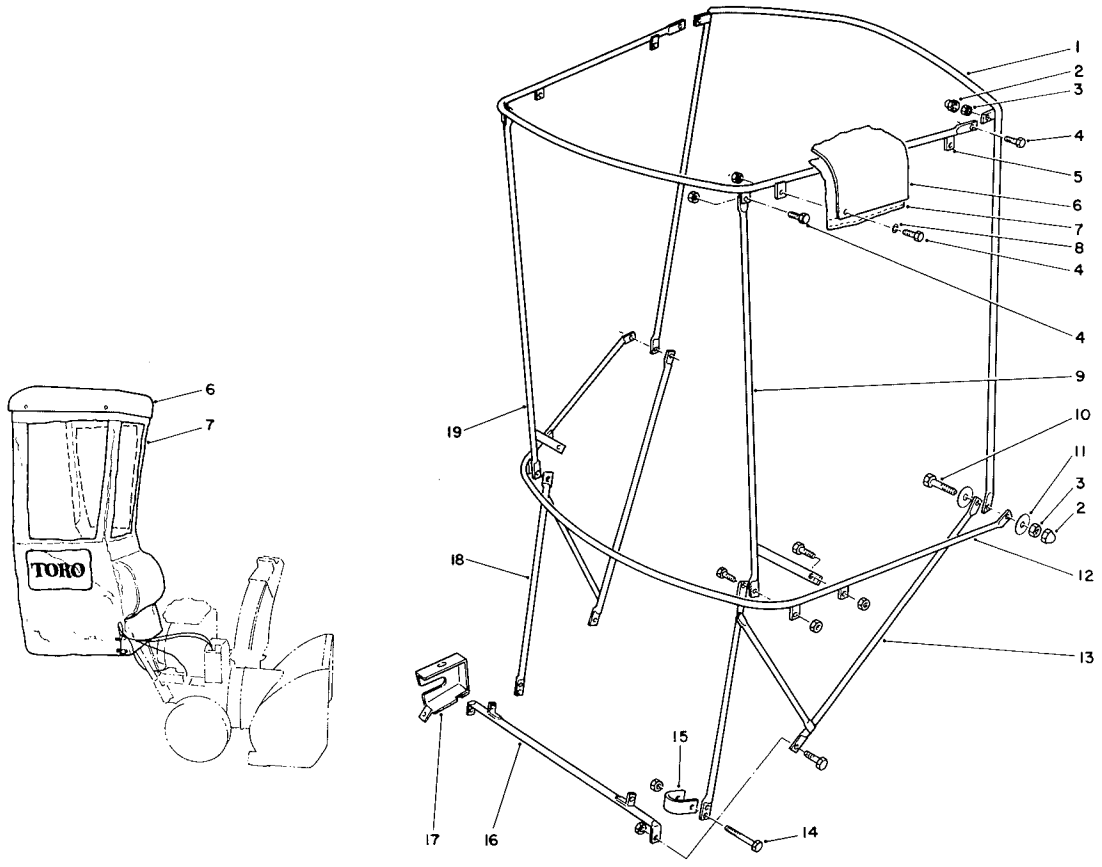

C-0138

SNOW CAB ASSEMBLY NO. 68-9500 (Optional)

Ref. No.	Part No.	Description	No. Used
1	70-2260	Bow - Vertical	1
2	70-2240	Cover - Nut	4
3	32153-4	Nut - Lock	18
4	321-4	Screw - Hex. Hd.	14
5	70-2250	Frame - Top	1
†6		Top - Plastic	1
†7		Cover - Vinyl	1
8	3256-1	Washer - Flat	4
9	70-2220	Post - Corner L.H.	1
10	321-6	Screw - Cap Hex. Hd.	2

Ref. No.	Part No.	Description	No. Used
11	3256-58	Washer - Fender	4
12	70-2270	Bow - Horizontal	1
13	66-6230	Bracket - Attaching L.H.	1
14	321-11	Screw - Cap Hex. Hd.	2
15	66-6240	Clamp - U	2
16	66-6210	Bracket - Base Attaching	1
17	63-3330	Cover - Lever	1
18	66-6220	Bracket - Attaching R.H.	1
19	70-2230	Post - Corner R.H.	1
*	74-1190	Weight Kit (Optional)	1

†Not sold separate

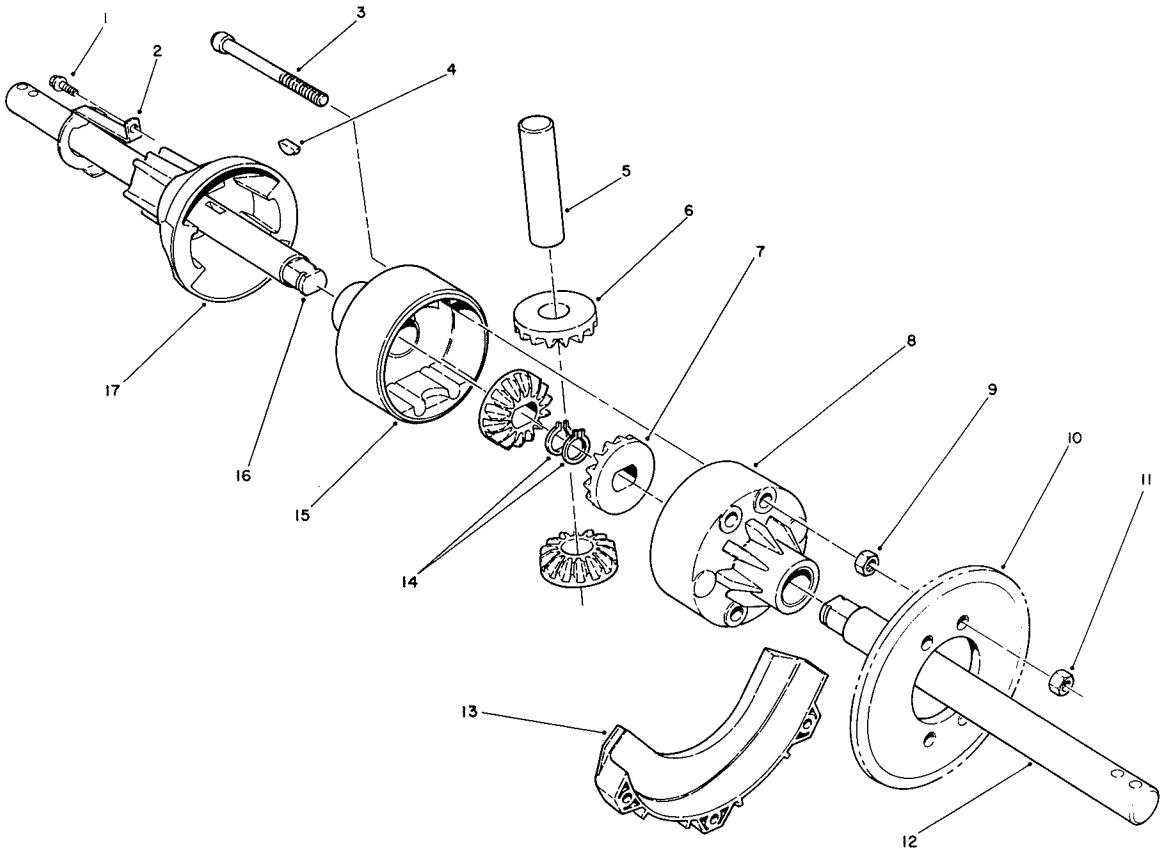

C-0137

DIFFERENTIAL KIT MODEL NO. 38038 (Optional)

Ref. No.	Part No.	Description	No. Used
1	32144-73	Screw - Hex. Washer Hd.	1
2	68-9260	Spring - Lockout	1
3	3274-82	Screw - Hex. Socket Hd.	4
4	3257-41	Key - Woodruff	2
5		Shaft - Cross	1
6		Gear - Cross Shaft Pinion	2
7		Gear - Side Pinion	2
8	68-9220	Housing - Female	1
9	3217-6	Nut - Hex.	4
10	68-9270	Sprocket - 32T	1
11	3296-47	Nut - Lock	4

Ref. No.	Part No.	Description	No. Used
12	68-9230	Shaft - Differential L.H.	1
13	68-9310	Guard - Chain R.H.	1
14	32120-93	Ring - Retaining	2
15	68-9210	Housing - Male	1
16	68-9240	Shaft - Differential R.H.	1
17	68-9250	Coupling - Differential	1
*	68-8410	Cover - Lower Belt	1
*	68-9390	Decal - Caution/Instructions	1
*	68-9280	Gear Set (Incl. Ref. #5-7)	1

*Not Illustrated

ENGINE BRIGGS & STRATTON MODEL 190406
TYPE 3104-01

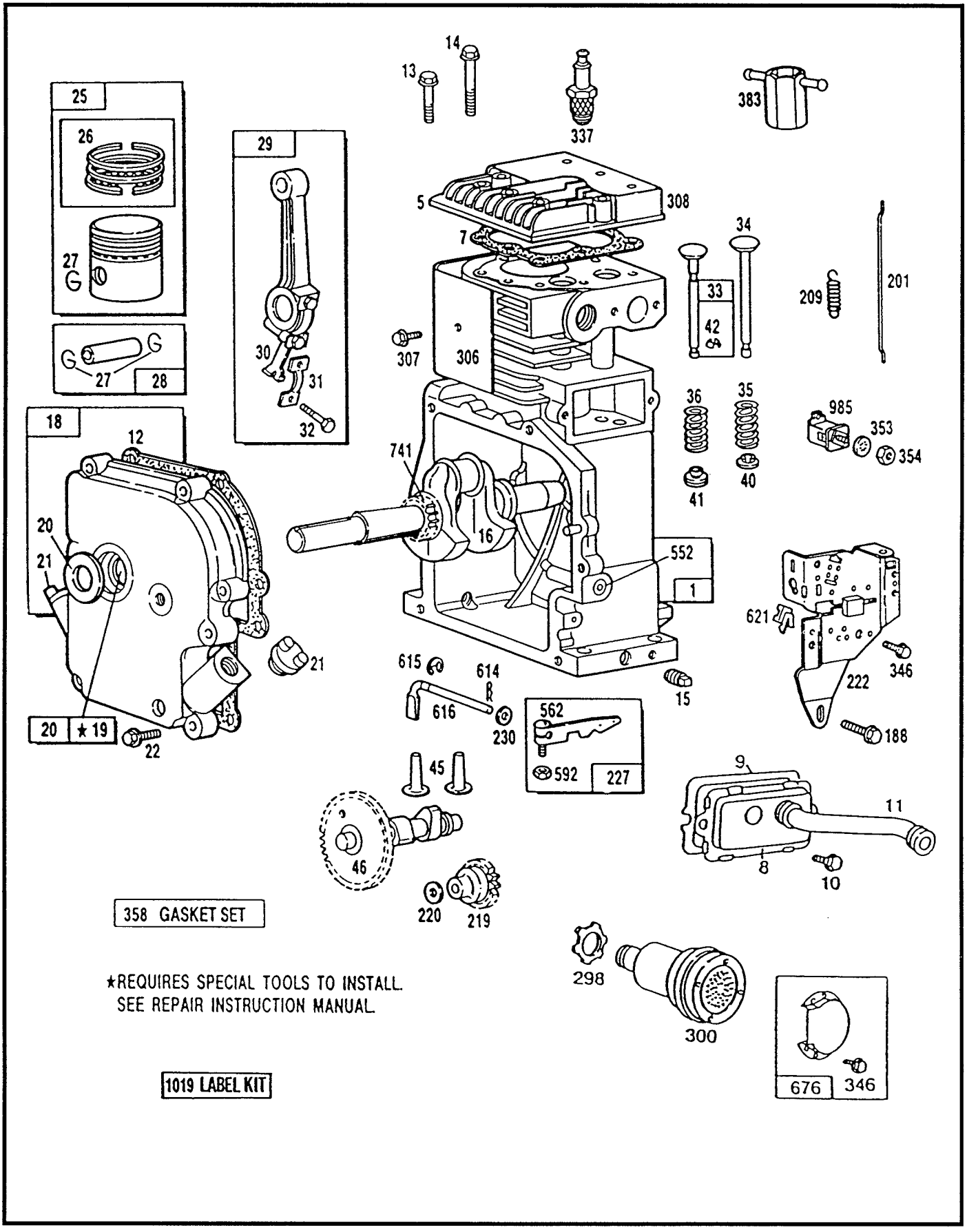

Assemblies include all parts shown in frames.

ENGINE BRIGGS & STRATTON MODEL 190406 TYPE 3104-01

Ref. No.	Part No.	Description	No. Used
1	396178	Cylinder Assembly	1
5	212918	Head - Cylinder	1
†7	272163	Gasket - Cylinder Head	1
8	390321	Breather Assembly	1
†9	27803	Gasket - Valve Cover	1
10	93394	Screw	1
11	280733	Tube - Breather	1
†12	27750	Gasket - Crankcase Cover (.015" Thick)	1
†*	27876	Gasket - Crankcase Cover (.005" Thick)	1
†*	27877	Gasket - Crankcase Cover (.009" Thick)	1
13	93211	Screw - Cylinder Head	4
14	93113	Screw - Cylinder Head	4
15	91084	Plug - Oil Drain	1
*	93418	Plug - Oil Drain (Hex. Socket)	1
16	492456	Crankshaft **Note:** Order 94388 Key For Loose Timing Gear Retaining Device.	1
18	392818	Cover Assembly - Crankcase	1
19	295964	Bushing - Crankcase Cover **Note:** Requires Special Tools for Installation	1
20	391086	Seal - Oil	1
21	66768	Plug - Oil Filler	1
22	93585	Screw - Crankcase Cover	2
25	391673	Piston Assy. (Std.)	1
*	391674	Piston Assy. (.010" OS.)	1
*	391675	Piston Assy. (.020" OS.)	1
*	391676	Piston Assy. (.030" OS.) **Note:** For Chrome Ring Set-Standard Size-Order No. 299743.	1
26	391669	Piston Ring Set (Std.)	1
*	391670	Piston Ring Set (.010" OS.)	1
*	391671	Piston Ring Set (.020" OS.)	1
*	391672	Piston Ring Set (.030" OS.)	1
27	68546	Lock - Piston Pin	2
28	295840	Piston Pin Assy. (Std.)	1
*	295841	Piston Pin Assy. (.005" OS.)	1
29	390401	Connecting Rod Assembly **Note:** (For Connecting Rod with .020" Undersize Crankpin Bore - Order Part No. 390773)	1

Ref. No.	Part No.	Description	No. Used
30	222113	Dipper - Connecting Rod	1
31	222114	Lock - Conn. Rod Screw	1
32	92659	Screw - Connecting Rod	1
33	390419	Valve - Exhaust	1
34	261055	Valve - Intake	1
35	65906	Spring - Intake Valve	1
36	26828	Spring - Exhaust Valve	1
40	221596	Retainer - Intake Valve	1
41	292260	Rotocoil - Exhaust Valve	1
42	93630	Retainer - Exhaust Valve Rotocoil	2
45	260933	Tappet - Valve	1
46	211689	Gear - Cam	1
188	93535	Screw	1
201	260872	Link - Governor	1
209	261126	Spring - Governor	1
219	391737	Gear - Governor	1
220	221551	Washer - Thrust	1
222	399156	Plate - Governor Control	1
227	391965	Lever Assy. - Governor	1
230	222450	Washer - Governor Crank	1
298	261409	Locknut - Muffler	1
300	393010	Muffler - Exhaust	1
306	223374	Shield - Cylinder	1
307	93163	Screw - Cylinder Shield	1
308	221901	Cover - Cylinder Head	1
337	802592	Plug - Spark (Resistor) (1-7/8" High-47m.m.)	1
346	93705	Screw	1
353	92791	Washer - Lock	1
354	90576	Nut - Hex.	1
358	299577	Gasket Set	1
383	89838	Wrench - Spark Plug	1
552	491893	Bushing - Governor Crank	1
562	92613	Bolt - Governor Lever	1
592	231082	Nut - Hex.	1
614	93306	Cotter - Hair Pin	1
615	93307	Retainer - E-Ring	1
616	231057	Crank - Governor	1
621	396847	Switch - Stop	1
676	393757	Deflector - Exhaust (Side Outlet)	1
741	262479	Gear - Timing	1
985	398525	Insulator Assembly	1
1019	491181	Decal Kit	1

*Not Illustrated
†Included in Gasket Set #299577.

ENGINE BRIGGS & STRATTON MODEL 190406
TYPE 3104-01 (Continued)

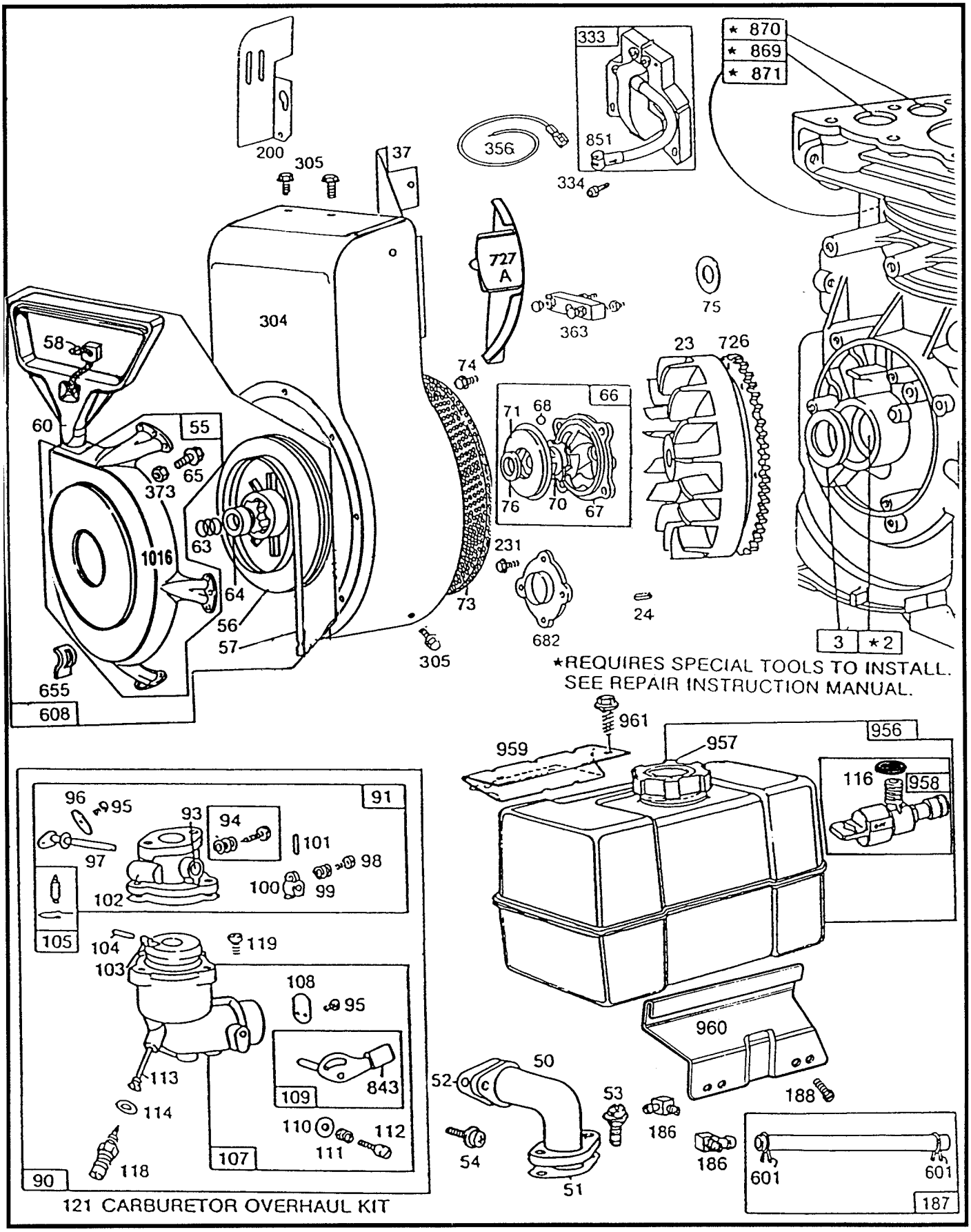

Assemblies include all parts shown in frames.

ENGINE BRIGGS & STRATTON MODEL 190406 TYPE 3104-01 (Continued)

Ref. No.	Part No.	Description	No. Used
2	295962	Bushing - Cylinder	1
3	294606	Seal - Oil	1
23	391983	Flywheel and Ring Gear Ass'y - Magneto	1
24	222698	Key - Flywheel	1
37	222475	Guard - Flywheel	1
50	490050	Elbow - Intake	1
* 51	270684	Gasket - Carb. Mtg.	1
* 52	27828	Gasket - Intake Elbow Mtg.	1
53A	93357	Screw - Carb. Mtg.	1
54	93208	Screw - Intake Elbow Mounting	2
55	398099	Housing - Rewind Starter	1
56	295871	Pulley - Rewind Starter **Note:** Includes 63" Rope.	1
57	490179	Spring - Rewind Starter	1
58	66884	Rope - Rewind Starter (63" Long)	1
60	398101	Grip - Starter Rope	1
63	260414	Spring - Ratchet	1
64	230543	Adapter - Ratchet Spring	1
65	94128	Screw - Rewind Starter Housing Mounting	1
66	399671	Clutch Assy - Rewind Starter	1
67	394897	Housing - Rewind Starter Clutch	1
68	63770	Ball - Clutch	1
70	298799	Ratchet - Rewind Starter Clutch	1
71	394506	Washer - Clutch Retainer (Rubber Coated)	1
73	221796	Screen - Rewind Starter	1
74	93042	Screw	1
75	224061	Washer - Spring	1
76	68238	Washer - Ratchet Sealing	1
90	490140	Carburetor Assembly	1
91	399443	Body Assembly - Upper Carburetor	1
93	23108	Bushing - Throttle Shaft	1
‡†94	292681	Valve Assy - Carb. Idle	1
95	93499	Screw - Throttle & Choke Valve	1
96	223370	Valve - Throttle	1
97	298826	Shaft and Lever - Throttle	1
98	91920	Screw - Machine	1
99	26157	Spring - Throttle Adjust.	1
100	212904	Stop - Throttle	1
101	93043	Pin - Throttle Stop	1
‡102	27918	Gasket - Carburetor Body	1
103	99333	Float - Carburetor	1
‡†104	230896	Pin - Float Hinge	1
‡†105	394681	Valve - Fuel Inlet	1
107	399442	Body Assy - Lower Carb.	1
108	62872	Valve - Choke	1
109	391987	Shaft and Lever Choke	1
110	222712	Washer - Choke Lever	1
111	26155	Spring - Choke Lever	1
112	23123	Screw - Choke Lever	1
†113	398202	Nozzle - Carburetor	1
‡114	68667	Gasket - Nozzle	1
116	280203	Fuel Valve O-Ring	1
‡†118	99525	Valve - Needle	1
119	94152	Screw - Hex. Hd.	1
121	398235	Carburetor Overhaul Kit	1
186	67218	Connector - Fuel Pipe	1
187	393815	Pipe - Fuel (11" Long)	1
188	93535	Screw	1
200	221760	Guide - Air	1
231	94238	Screw	1
304	399271	Housing - Blower	1
305	93158	Screw	1
333	398811	Armature - Magneto	1
334	93381	Screw - Armature	1
356	398838	Wire - Ground	1
363	19203	Puller - Flywheel	1
373	92987	Nut - Hex.	1
474	391595	Stator & Brkt. - Alternator	1
601	93053	Clamp - Fuel Pipe (Green)	1
608	397982	Starter Assy. - Rewind	1
682	211516	Shield - Starter Clutch	1
726	392134	Gear - Ring (Aluminum - Includes Mounting Parts)	1
727	223597	Guard - Ring Gear	1
		Note: Both Guards Use:	
		221968 Guard - Upper Ring Gear	
		93712 Screw	2
		93713 Lockwasher	2
843	280149	Sleeve - Choke Lever	1
851	221798	Terminal - Ignition Cable	1
869	211661	Seat - Intake Valve (Std.)	1
870	211661	Seat - Exhaust Valve (Std.) (For Options see Repair Manual)	1
871	231218	Guide - Exhaust or Intake Valve	1
956	493338	Tank Assembly Fuel	1
957	397975	Cap - Fuel Tank	1
958	399517	Valve - Fuel Shut-Off	1
959	223462	Bracket - Fuel Tank (Up.)	1
960	492990	Bracket - Fuel Tank (Low.)	1
961	94095	Screw - Tank Mounting	1
1016	490817	Spacer	1

*Included in Gasket Set #299577
†Included in Carburetor Overhaul Kit #398235

ENGINE BRIGGS & STRATTON MODEL 190406
TYPE 3104–01 (Continued)

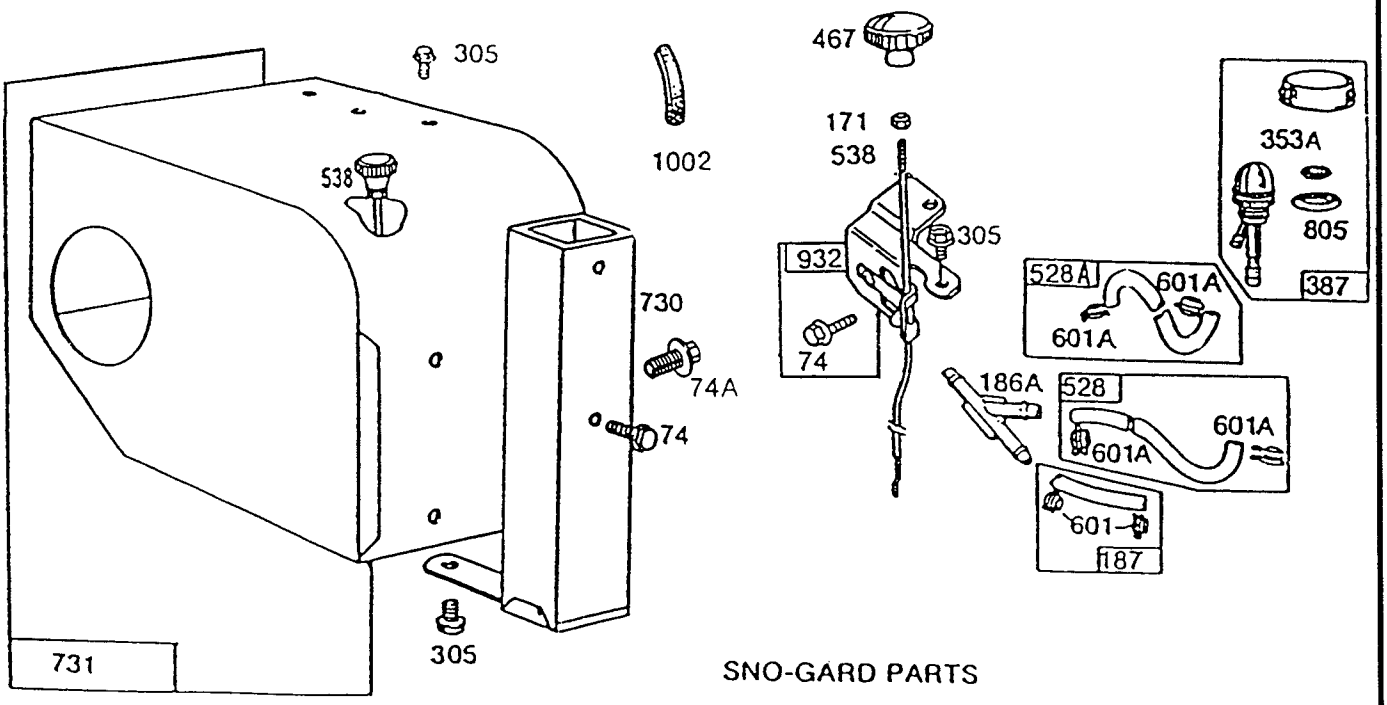

SNO-GARD PARTS

Assemblies include all parts shown in frames.

ENGINE BRIGGS & STRATTON MODEL 190406 TYPE 3104-01 (Continued)

Ref. No.	Part No.	Description	No. Used
74	93042	Screw	1
74A	93490	Screw - Hex Hd. (Sno-Hood to Blower Housing)	1
171	90356	Nut	1
186A	280727	Connector - Fuel Pipe	1
187	393815	Pipe - Fuel (Flexible) 11-1/4"	1
305	93158	Screw	1
353A	94281	Washer - Lock	1
387	399255	Primer	1
467	231051	Knob - Control	1
528	399254	Hose - Fuel	1
528A	399256	Hose - Fuel	1
538	262549	Rod - Control	1
601	93053	Clamp - Fuel Pipe (Green) **Note:** 93807 Clamp -Fuel Pipe (Red).	2
601A	94171	Clamp - Hose (For 1/4" O.D. Hose)	1
730	299384	Stack - Carburetor	1
731	493221	Hood - Snow	1
805	94189	Nut - Primer Retaining	1
932	396084	Guide - Control Rod	1
1002	280738	Trim Strip - Blower Housing	1

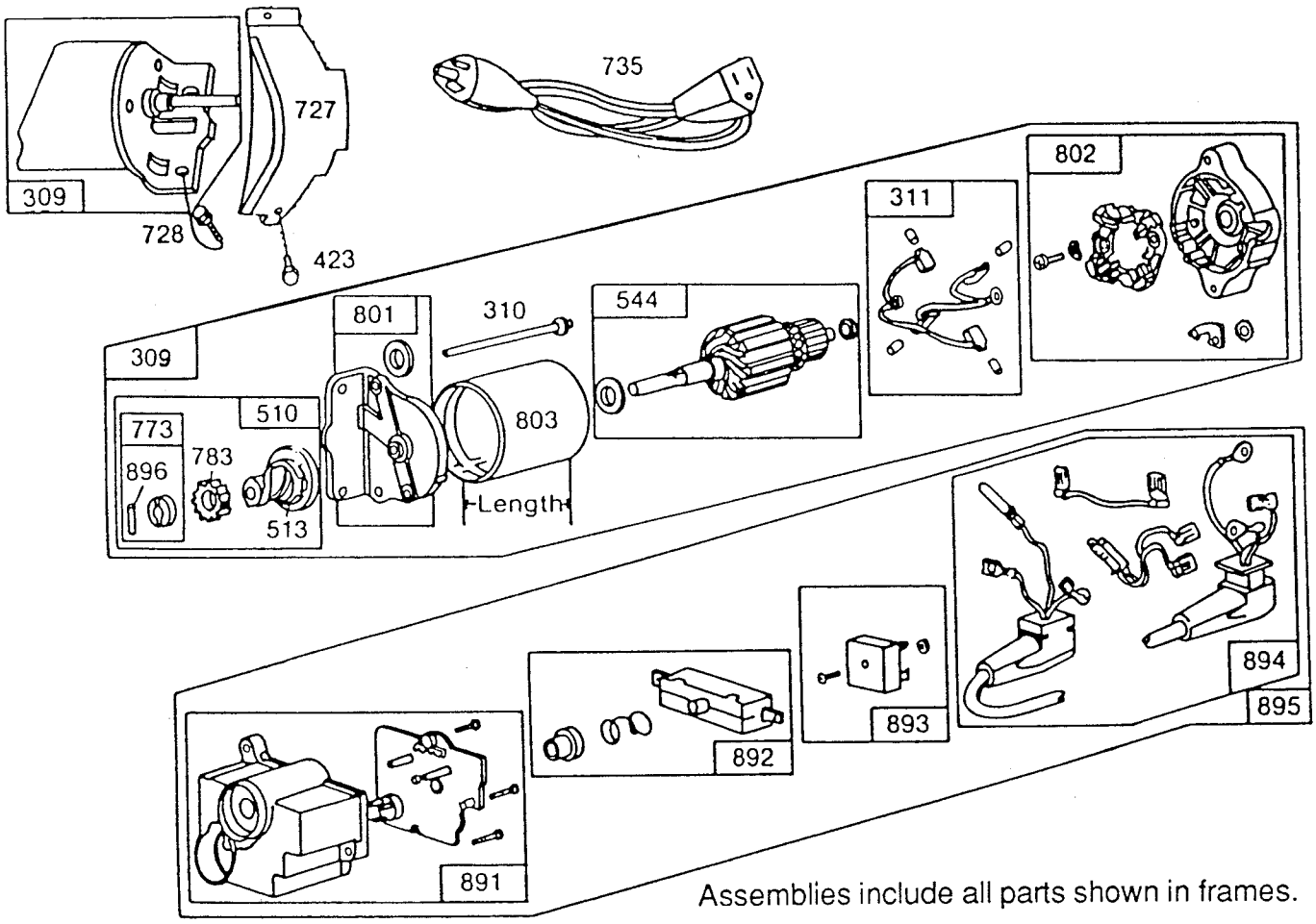

Assemblies include all parts shown in frames.

120V ELECTRIC STARTER MOTOR NO. 37–4630 (Optional)

Ref. No.	Part No.	Description	No. Used
309	396505	Motor & Drive Assembly	1
310	93934	Thru Bolt Assembly	2
311	393612	Brush Assembly	1
423	93984	Screw	1
510	391461	Drive Assembly (Incl. Ref. #513, 773, 783 & 896)	1
513	391135	Clutch Assembly	1
544	393607	Armature Assembly	1
727	395405	Cover – Starter (Includes Mounting Screws)	1
728	93535	Screw	1
735	390966	Cord – Starter	1
773	391462	Retainer (Incl. Ref. #896)	1

Ref. No.	Part No.	Description	No. Used
783	280104	Gear	1
801	394398	Drive End Cap Assembly	1
802	491192	Commutator End Cap Assy.	1
803	491008	Housing Assembly	1
891	393705	Housing Group	1
892	393708	Switch Group	1
893	393707	Rectifier Group	1
894	393706	Lead Group	1
895	393486	Control Group	1
896	93754	Roll Pin	1
*†	38-0070	Bracket – Switch	1
*†	3296-2	Nut – Lock	3
*†	3252-6	Screw – Cap Socket Hd.	3

*Not Illustrated

†Obtain from The TORO Co.

Note: Obtain individual parts from your local Briggs & Stratton Dealer.

Litho In USA
LTS-108616