FORM NO. 3314-949

TORO®

MODEL NO. 38574-2000001 & UP

PARTS CATALOG

828 SNOWTHROWER

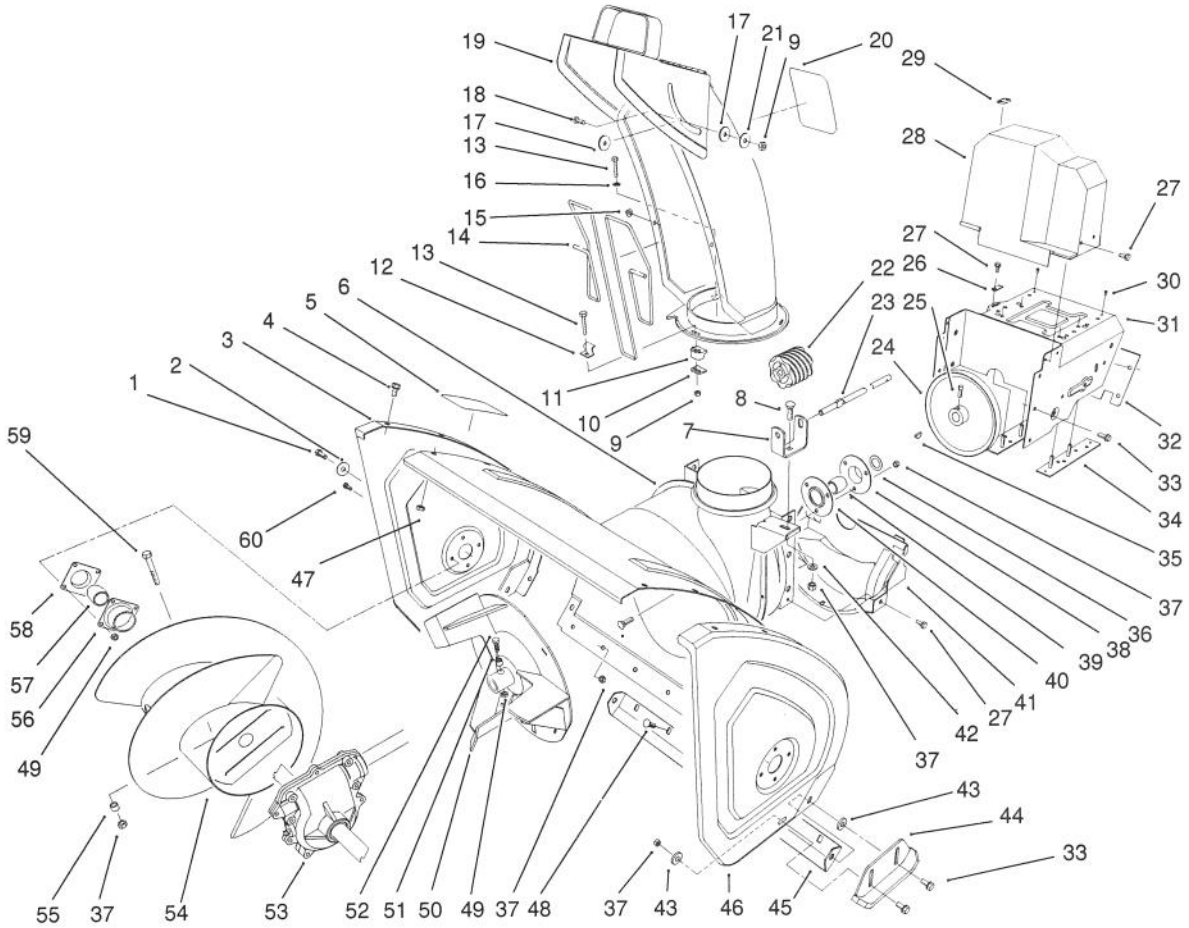

C-0045

HOUSING & CHUTE ASSEMBLY

Ref. No.	Part No.	Description	No. Used
1	323-6	Screw - Hex Hd.	2
2	3-0750	Washer - Retaining	2
3	66-7821	Plate - Side R.H.	1
4	3234-28	Screw - Hex Flange Hd.	10
5	53-7670	Decal - Danger Auger	1
6	62-0721	Housing - 24"	1
7	63-2180	Bracket - Gear	1
8	3230-2	Bolt - Carriage	1
9	3296-2	Nut - Lock	4
10	63-2670	Plate - Chute Retainer	3
11	62-1430	Retainer - Chute	3
12	63-3130	Clip - Chute Guard	1
13	3274-13	Screw - Machine	3
14	63-3020	Guard - Chute	1
15	3290-326	Nut - Push	2
16	3256-14	Washer - Flat	1

Ref. No.	Part No.	Description	No. Used
17	63-2900	Washer - Plastic	2
18	32122-32	Screw	1
19	62-0840	Chute Assembly	1
20	53-7660	Decal - Danger Chute	1
21	3256-61	Washer - Flat	1
22	62-0820	Gear - Worm	1
23	62-1720	Rod - Chute Gear	1
24	62-1300	Pulley - Impeller	1
25	3242-4	Screw - Set Sq. Hd.	2
26	63-2300	Retainer - Cable	1
27	32144-4	Screw - Hex. Flange Hd.	6
28	63-2080	Cover - Belt (Upper)	1
29	63-3290	Cover - Cable	1
30	3269-23	Rivet	4
31	66-6980	Frame - Engine	1
32	62-1440	Cover - Engine Frame	1

*Not Illustrated

TPS

©The TORO Company - 1991

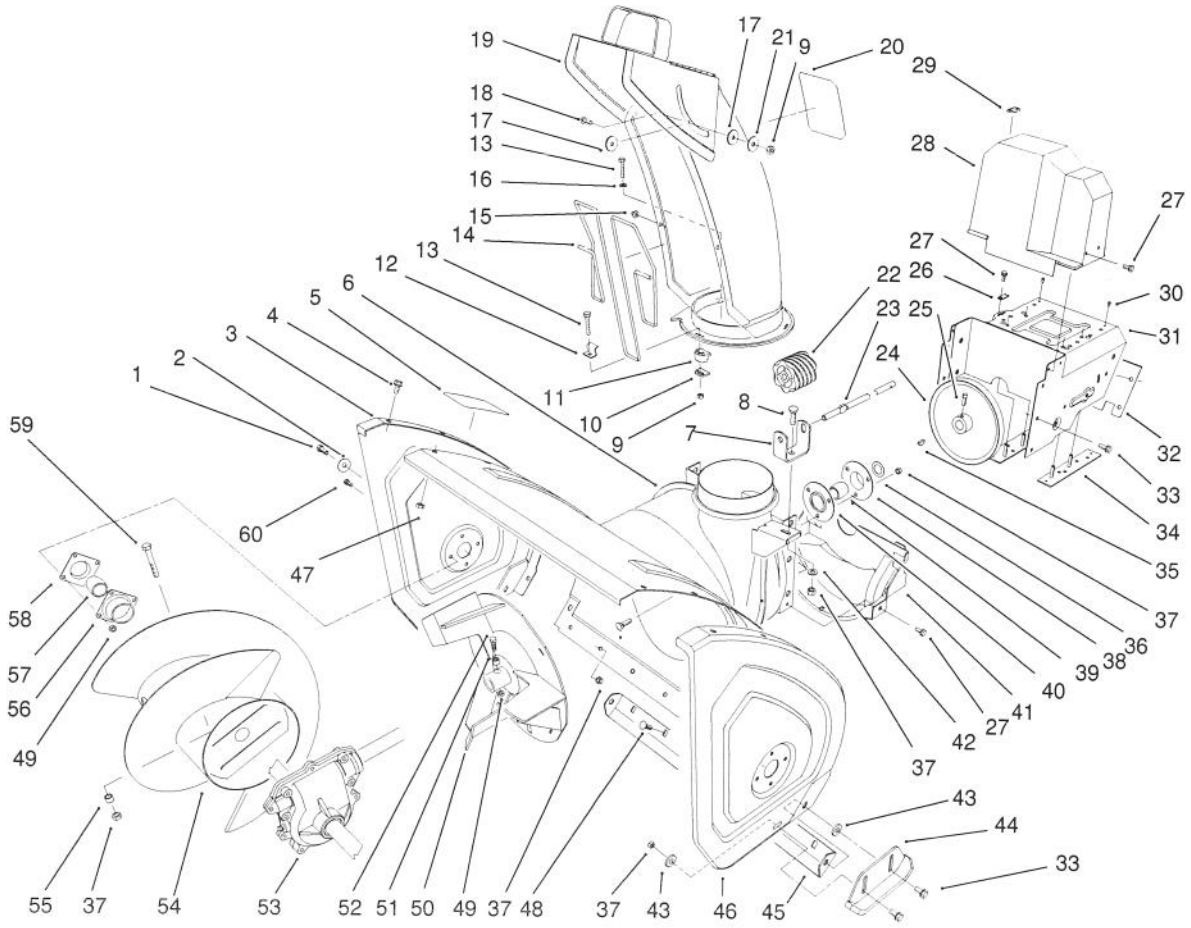

C-0045

HOUSING & CHUTE ASSEMBLY (Continued)

Ref. No.	Part No.	Description	No. Used
33	3234-5	Screw - Hex. Washer Hd.	10
34	68-4110	Plate - Engine Stud L.H.	1
*	68-4100	Plate - Engine Stud R.H.	1
35	3257-23	Key - Woodruff	1
36	252-80	Washer - Thrust	1
37	3296-29	Nut - Lock	13
38		Flange - Bearing (Front)	1
39	63-3450	Bearing - Impeller	1
40		Flange - Bearing ((Rear)	1
41	62-1400	Cover - Belt (Lower)	1
42	3256-23	Washer - Flat	1
43	52-2861	Washer	4
44	74-1440	Plate Assembly	2
45	66-7761	Blade - Scraper	1
46	66-7831	Plate - Side L.H.	1
47	3296-47	Nut - Lock	12

Ref. No.	Part No.	Description	No. Used
48	3230-23	Screw - Carriage	9
49	3296-42	Nut - Lock	10
50	66-7920	Impeller	1
51	66-8010	Spacer	2
52	321-44	Screw - Cap Hex. Hd.	2
53	74-1561	Auger Gearbox Assembly	1
54	68-7451	Auger - R.H.	1
*	68-7461	Auger - L.H.	1
55	25-5090	Spacer - Auger Hub	2
56	20-0990	Flange - Bearing (Inner)	2
57	20-0980	Bearing - Auger	2
58	20-1000	Flange - Bearing (Outer)	2
59	17-7030	Bolt - Auger	2
60	321-3	Screw - Hex Hd.	8
*	12-8789	Impeller Bearing Assembly (Incl. Ref. #38-40)	1

*Not Illustrated

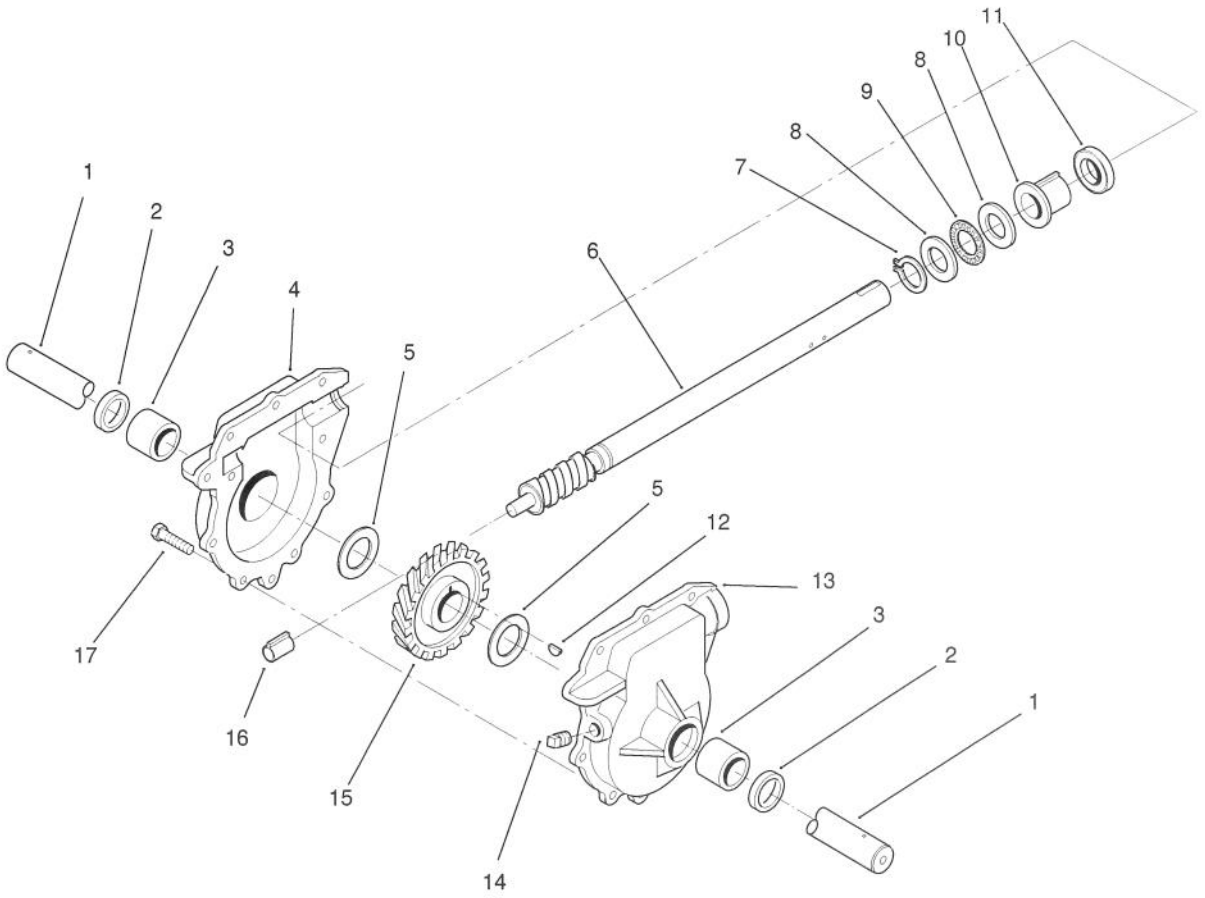

C-1015

24" AUGER GEARCASE ASSEMBLY NO. 74-1561

Ref. No.	Part No.	Description	No. Used
1	62-1530	Shaft - Auger (24")	1
2	7-0045	Seal - Oil	2
3	256-237	Bushing - Sleeve	2
4	74-1580	Gearcase Assembly - R.H. (Incl. Ref. # 2-3)	2
5	252-71	Bearing - Thrust	2
6	66-7811	Shaft - Impeller	1
7	32151-33	Ring - Snap	1
8	252-78	Washer - Thrust	2
9	252-76	Bearing - Thrust	1
10	37-6560	Bushing - Input	1
11	253-149	Seal - Input	1
12	3257-10	Key - Woodruff	1
13	74-1570	Gearcase Assembly - L.H. (Incl. Ref. # 2-3)	1
14	281-1	Plug - Pipe Sq. Hd.	1
15	62-0120	Gear - Helical	1
16	62-1150	Bushing - Worm	1
17	32144-110	Screw - Hex Washer Hd.	9
*	505-129	Sealant - 100g Tube	1

*Not Illustrated

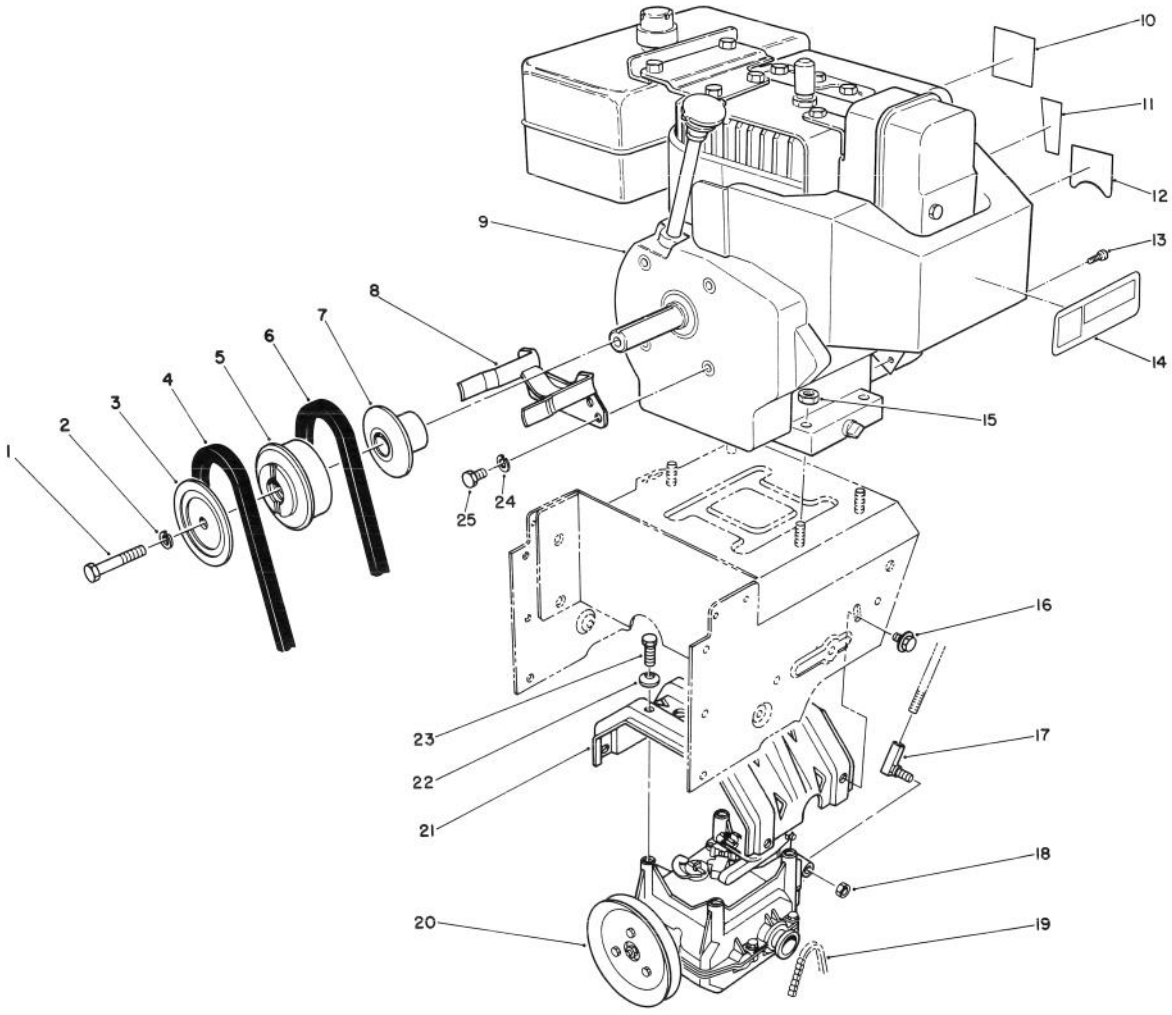

C-0048

ENGINE ASSEMBLY

Ref. No.	Part No.	Description	No. Used
1	3212-8	Screw - Hex. Hd.	1
2	3253-6	Washer - Lock	1
3	63-0940	Sheave Half - Impeller	1
4	63-2962	Belt - Impeller	1
5	63-0930	Hub - Sheave	1
6	63-2951	Belt - Traction	1
7	63-0920	Sheave Half - Traction	1
8	68-7510	Guide - Belt	1
†9		Engine - Tecumseh Model No. HM80 Type 155336P	1
10	62-5760	Decal - Primer	1
11	63-3190	Decal - Throttle	1
12	63-2410	Decal - Choke	1

Ref. No.	Part No.	Description	No. Used
13	32144-4	Screw	1
14	63-2310	Decal - Hot Surface	1
15	32128-20	Nut - Lock	4
16	3234-7	Screw - Hex Flange Hd.	4
17	63-2640	Joint- Ball	1
18	3296-39	Nut - Lock	1
19	63-2930	Chain - Drive	1
20	66-8030	Transmission Assembly	1
21	63-2990	Frame - Transmission	1
22	3290-461	Washer - Belleville	4
23	11-0590	Screw - Cap Hex Hd.	4
24	3253-4	Washer - Lock	2
25	3210-1	Screw - Hex Hd.	2

*Not Illustrated
†Obtain from your local Tecumseh Dealer.

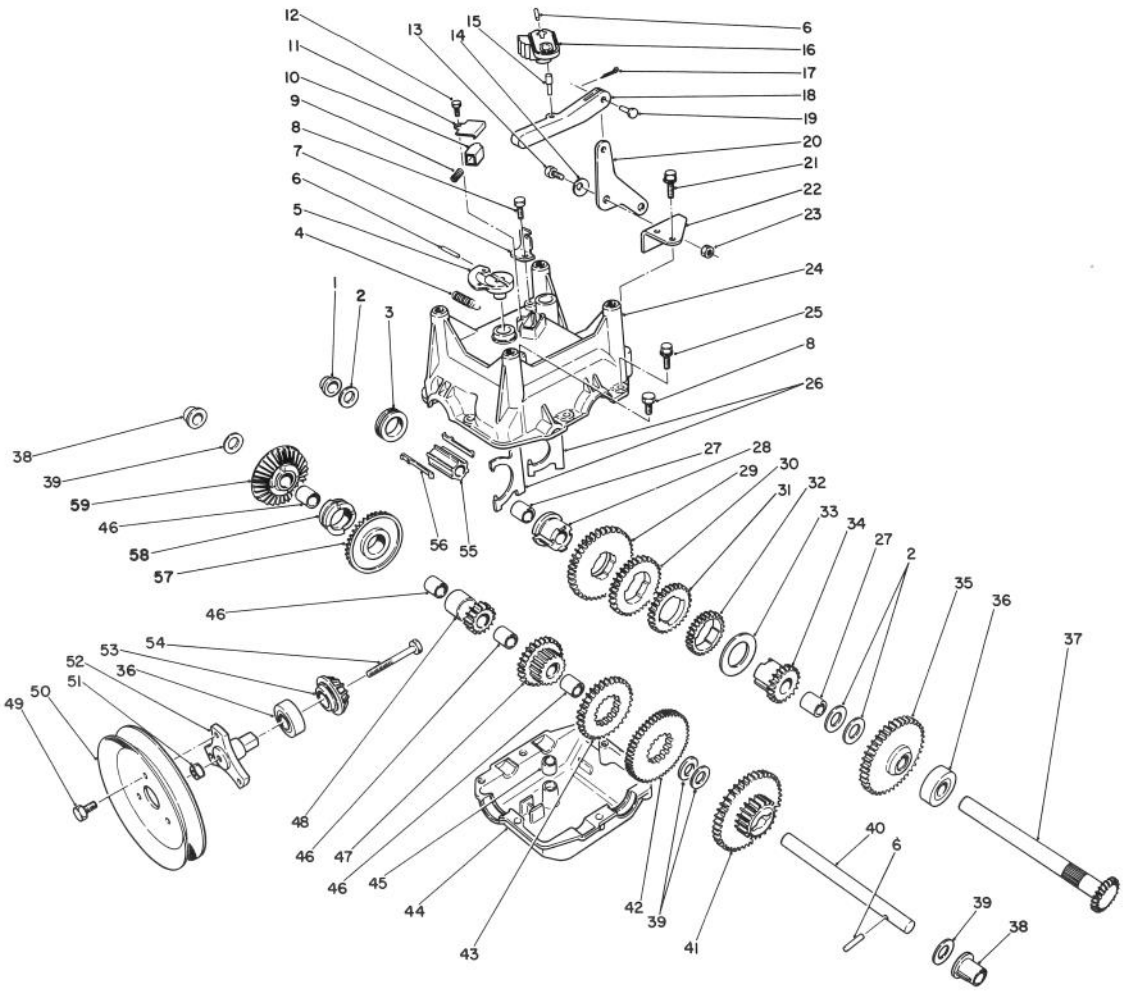

C-0052

TRANSMISSION ASSEMBLY NO. 66-8030

Ref. No.	Part No.	Description	No. Used
1	62-1180	Bushing - Output (Flange)	1
2	252-59	Washer - Thrust	3
3	62-0430	Collar - Shift (Speed)	1
4	63-2920	Spring - Extension (F/R Return)	1
5	62-0880	Lever - Direction Shift	1
6	32121-106	Pin - Coil	3
7	62-1740	Bracket - Cable	1
8	32144-4	Screw - Self Tapping	2
9	63-2890	Spring - Compression (Detent)	1
10	62-1020	Button - Detent	1
11	62-1690	Cover - Detent	1
12	32104-71	Screw - Pan Hd.	1
13	63-3410	Bolt - Shoulder	1
14	3290-477	Washer - Curved	1
15	63-2190	Pin - Gearshift Link	1
16	62-0870	Lever - Gear Shift	1
17	3272-1	Pin - Cotter	1
18	62-0860	Link - Gearshift	1
19	283-3	Pin - Clevis	1
20	63-2600	Bellcrank	1
21	32104-95	Screw - Hex Washer Hd.	2

Ref. No.	Part No.	Description	No. Used
22	62-1190	Bracket - Bellcrank	1
23	3296-42	Nut - Lock	1
24	62-0490	Gear Case - Upper	1
25	32144-86	Screw - Hex Washer Hd.	6
26	62-1040	Yoke-Shift	2
27	62-1350	Bushing - Output	2
28	62-0320	Sleeve	1
29	62-0240	Gear - 45T	1
30	62-0220	Gear - 34T	1
31	62-0200	Gear - 27T	1
32	62-0250	Gear - 29T	1
33	63-2280	Washer - Thrust	1
34	62-0340	Sleeve - Gear 19T	1
35	62-0370	Gear - 41T	1
36	38-7820	Bearing - Ball	2
37	62-1080	Shaft - Output	1
38	62-1170	Bushing - Flange	2
39	257-10	Washer - Thrust	4
40	62-0330	Shaft - Intermediate	1
41	62-0360	Gear - Compound 19T/41T	1
42	62-0260	Gear - 51T	1
43	62-0210	Gear - 33T	1
44	62-0480	Gear Case - Lower	1

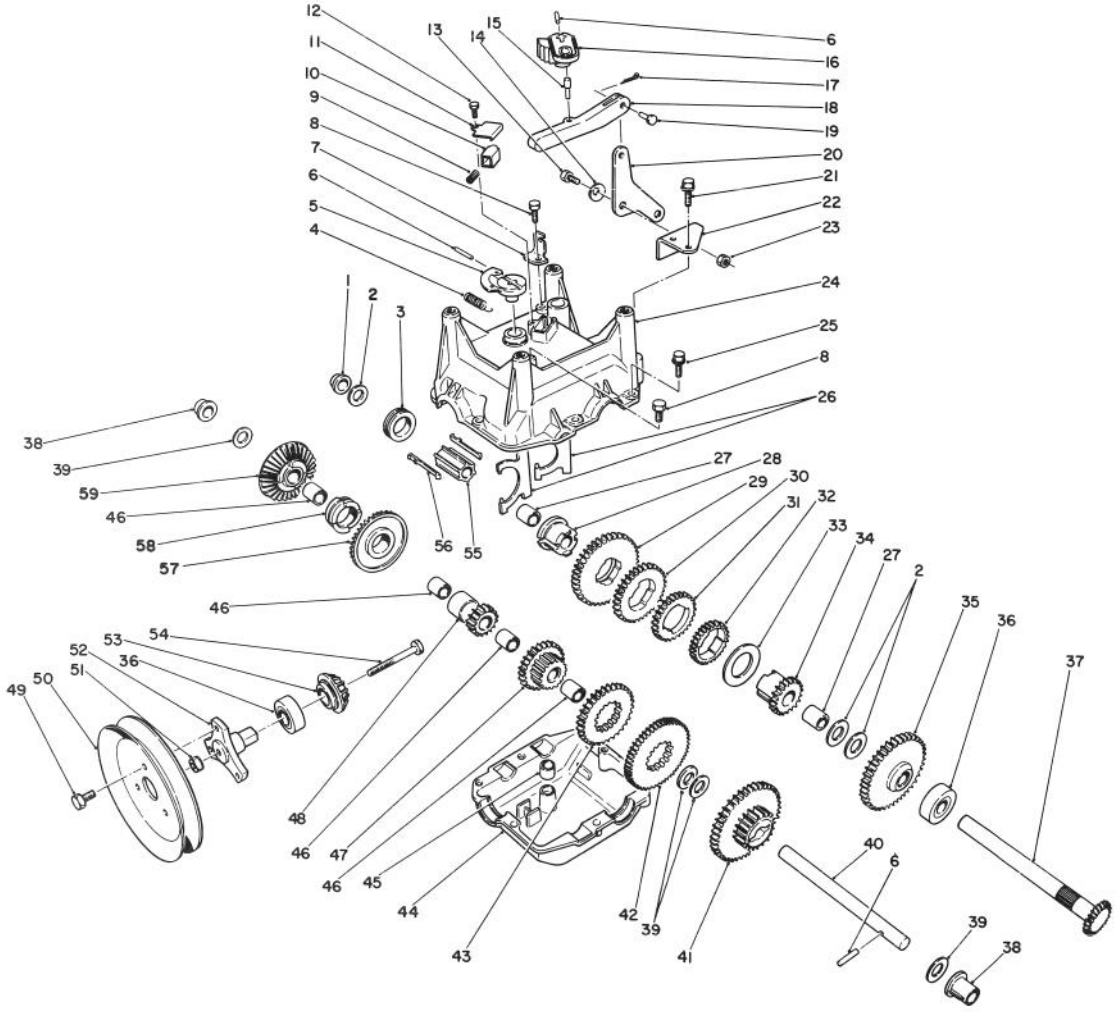

C-0052

TRANSMISSION ASSEMBLY NO. 66-8030 (Continued)

Ref. No.	Part No.	Description	No. Used
45	29-9570	Bushing - Yoke	1
46	62-1160	Bushing - Intermediate	4
47	68-4310	Gear - 26T	1
48	62-0500	Gear - 15T	1
49	12-3270	Screw	3
50	62-1310	Pulley - Traction	1
51	32128-32	Nut - Flange Lock	1
52	62-0380	Hub - Pulley	1
53	62-0350	Pinion - Bevel 19T	1

Ref. No.	Part No.	Description	No. Used
54	321-15	Screw - Hex Hd.	1
55	68-4320	Sleeve - Shift	1
56	62-0310	Key - Shift	2
57	67-5870	Gear - Bevel 36T	1
58	67-5880	Collar - Shift	1
59	13-3559	Gear - Bevel Reverse 36T (Incl. Ref. #46)	1
*	505-101	Grease - 14.5 oz. Cartridge	1

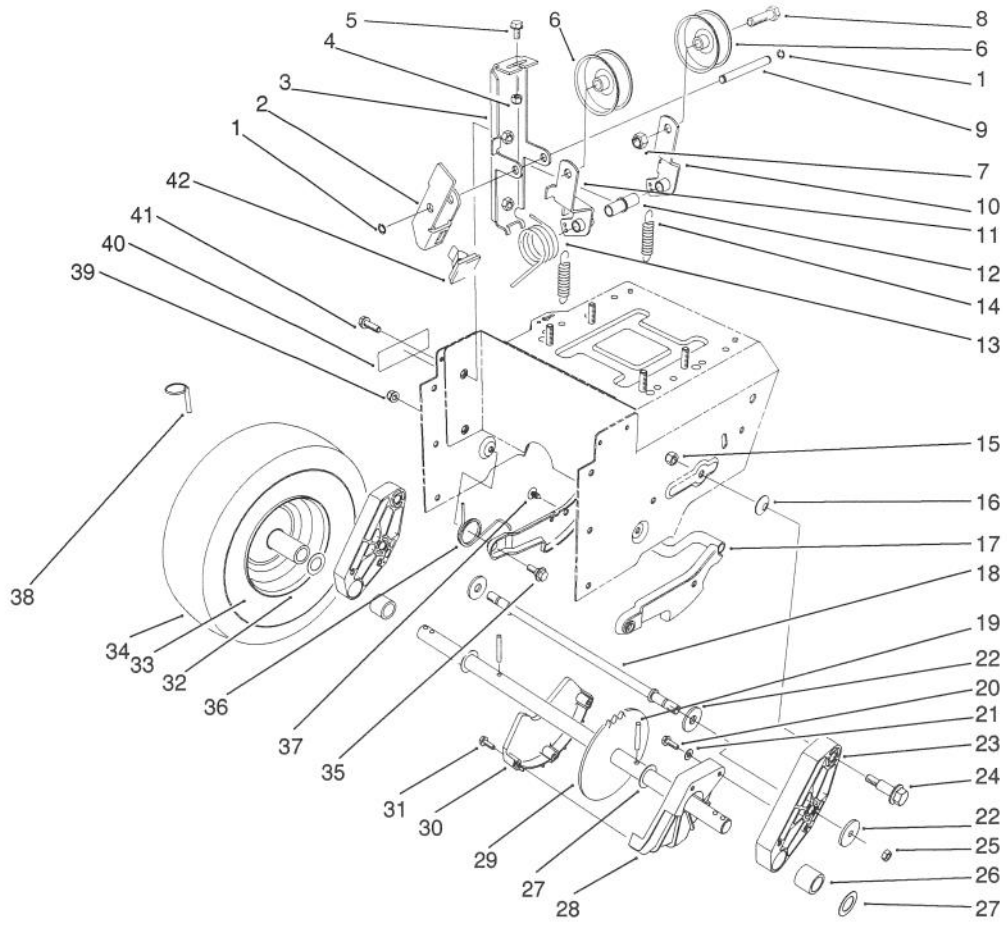

C-0053

TRACTION DRIVE ASSEMBLY

Ref. No.	Part No.	Description	No. Used
1	32120-46	Ring - Retaining	2
2	63-2820	Arm - Brake	1
3	63-2850	Bracket - Idler Arm	1
4	3296-42	Nut - Lock	1
5	3234-13	Screw - Hex. Washer Hd.	1
6	3-4244	Pulley - Idler	2
7	3296-59	Nut - Lock	2
8	323-7	Screw - Hex Hd.	2
9	62-0970	Pin - Idler	1
10	62-1260	Arm - Traction Idler	1
11	62-1280	Arm - Impeller Idler	1
12	62-1210	Bushing - Idler	1
13	63-2881	Spring - Torsion	1
14	63-2870	Spring - Extension	2
15	3296-39	Nut - Lock	2
16	3290-461	Washer - Belleville	2
17	62-0470	Latch - Arm	1
18	66-7720	Rod - Latch	1
19	32121-9	Pin - Roll	2
20	32144-4	Screw - Hex Flange Hd.	2
21	3256-1	Washer - Flat	2
22	63-3340	Washer	4
23	66-7740	Pivot Arm Assembly (Incl. Ref. # 26)	2

Ref. No.	Part No.	Description	No. Used
24	62-1330	Bolt - Shoulder	2
25	3296-23	Nut - Lock	2
26	63-2250	Bushing - Axle	2
27	252-80	Washer - Thrust	4
28	62-1010	Guard - Chain L.H.	1
29	63-2112	Axle Assembly	1
30	62-1000	Guard - Chain R.H.	1
31	32104-121	Screw - Hex Flange Hd.	3
32	241-127	Rim - Wheel	2
33	232-48	Tube - Inner	2
34	231-123	Tire	2
35	5-2490	Bolt - Shoulder	2
36	63-2740	Spring - Torsion	1
37	3290-476	Fastener - Panel	1
38	3290-243	Pin - Klik	2
39	3296-47	Nut - Lock	2
40	63-3470	Decal - Warning	1
41	3234-7	Screw - Hex Flange Hd.	2
42	66-8060	Pad - Brake	1
*		Wheel & Tire Assembly (Incl. Ref. #32-34)	1
*	63-3040	Tire Chains Kit (Optional)	1
*	74-1190	Weight Kit (Optional)	1

*Not Illustrated

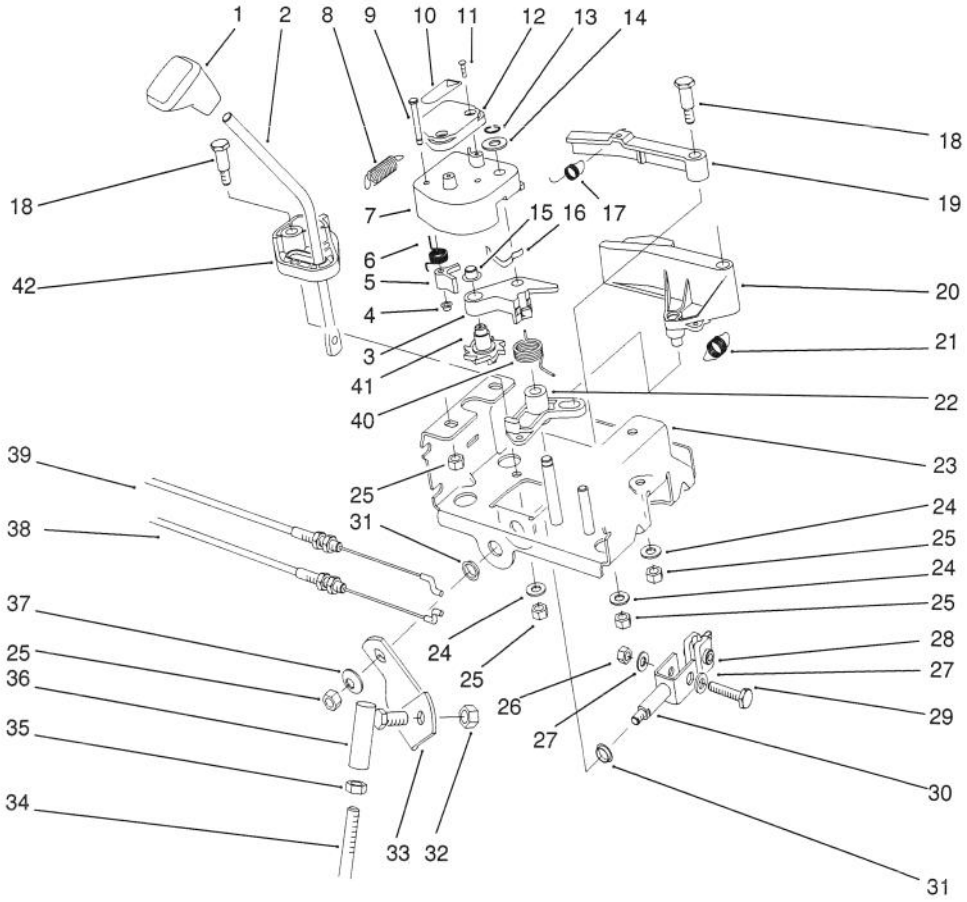

C-0054

TRACTION LINKAGE ASSEMBLY

Ref. No.	Part No.	Description	No. Used
1	62-1290	Knob - Shift	1
2	67-9240	Rod - Shift (Upper)	1
3	62-1110	Lever - Index Wheel	1
4	3290-422	Nut - Push	1
5	62-0180	Tang - Index	1
6	62-1650	Spring - Torsion	1
7	62-1100	Lever - Latch	1
8	63-2220	Spring - Extension	1
9	63-2610	Pin - Tang	1
10	63-2480	Decal - #2	1
11	32104-118	Screw - Pan Hd.	2
12	62-1140	Cover - Latch	1
13	32120-46	Ring - Retaining	1
14	257-9	Washer - Thrust	1
15	3290-320	Nut - Push	1
16	62-1710	Spring - Flat	1
17	63-2240	Spring - Extension	1
18	63-2650	Screw - Shoulder	2
19	62-1700	Lever - Lockout	1
20	62-1130	Lever - Reverse	1
21	63-2230	Spring - Extension	1

Ref. No.	Part No.	Description	No. Used
22	62-1120	Lever - Reverse	1
23	63-2150	Frame - Control	1
24	3256-23	Washer - Flat	3
25	3296-29	Nut - Lock	7
26	3296-42	Nut - Lock	2
27	3256-1	Washer - Flat	2
28	67-9250	Retainer - Shift Rod	1
29	321-9	Screw - Cap Hex. Hd.	1
30	66-7730	Clevis	1
31	256-296	Bushing - Nyliner	2
32	3296-39	Nut - Lock	1
33	63-2630	Bracket - Shift	1
34	63-2830	Rod - Shift (Lower)	1
35	3220-3	Nut - Jam	2
36	63-2640	Joint - Ball	1
37	3290-456	Washer - Belleville	1
38	63-2210	Cable - Gearbox	1
39	63-2200	Cable - Latch	1
40	63-2270	Spring - Torsion	1
41	62-0170	Wheel - Index	1
42	62-1470	Base - Lockout	1

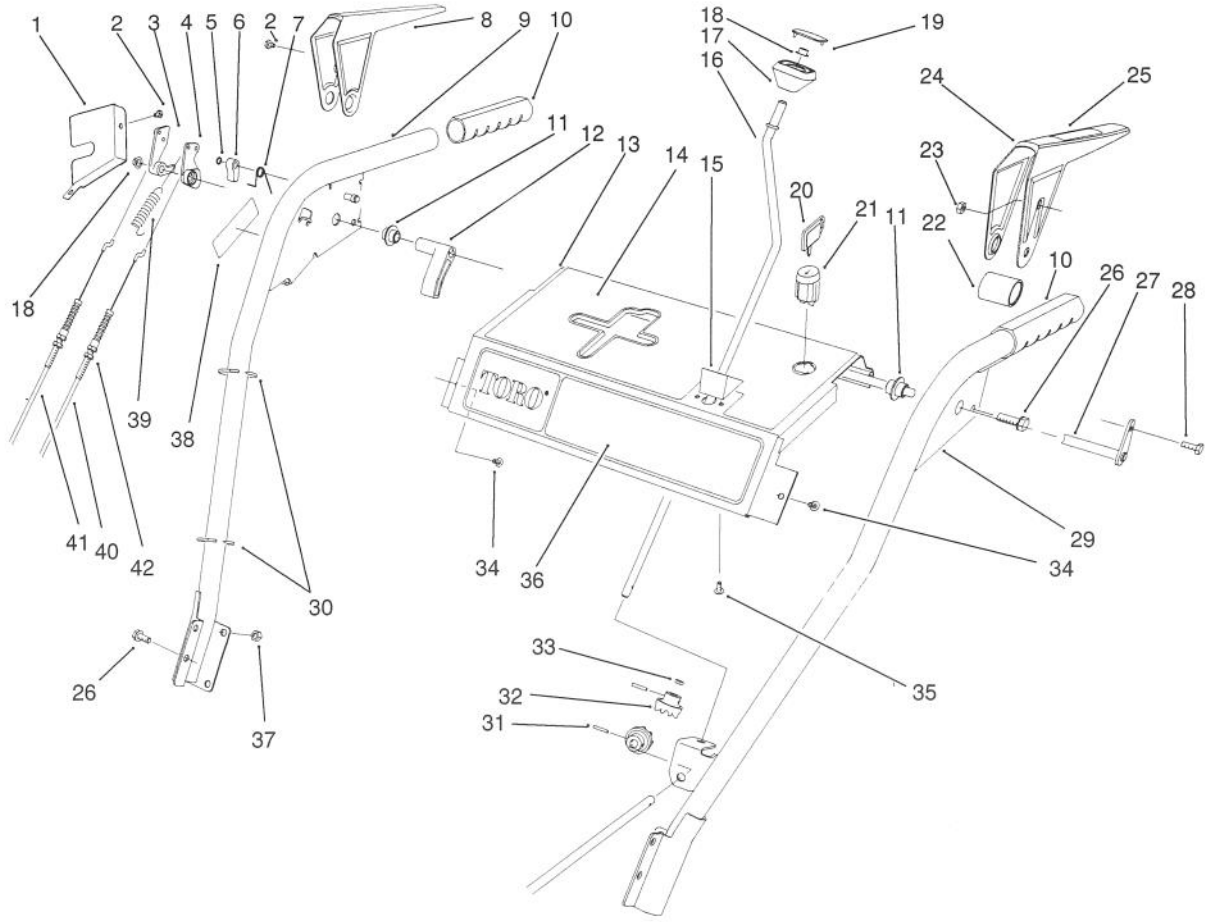

C-0055

HANDLE ASSEMBLY

Ref. No.	Part No.	Description	No. Used
1	63-2170	Cover - Lever Lock	1
2	2210-250	Screw	3
3	62-0300	Tang - Locking	1
4	62-0290	Cam - Release	1
5	32151-66	Ring - Retaining	1
6	62-0280	Latch - Lock	1
7	63-2910	Spring - Torsion	1
8	62-1050	Lever - Impeller	1
9	62-1381	Handle - R.H.	1
10	66-7850	Handlegrip	2
11	62-1070	Bushing - Lever	2
12	62-1640	Lever - Trip	1
13	66-8100	Panel - Control	1
14	63-2550	Decal - Panel Top	1
15	62-1490	Plate - Guide	1
16	63-2160	Rod - Chute Crank	1
17	62-1320	Knob - Chute Control	1
18	3290-320	Nut - Push	3
19	62-1520	Cover - Knob	1
20	63-8360	Key - Switch	1
21	40-5940	Switch - On/Off	1
22	63-3380	Spacer - Traction Lever	1

Ref. No.	Part No.	Description	No. Used
23	3296-2	Nut - Lock	1
24	62-1060	Lever - Traction	1
25	63-3050	Decal - Lever	1
26	3234-7	Screw - Hex Flange Hd.	6
27	63-2030	Rod - Cross	1
28	3290-359	Screw	1
29	66-8091	Handle - L.H.	1
30	3290-378	Tie - Cable	3
31	32121-50	Pin - Roll	2
32	62-1460	Gear - Universal	2
33	62-1230	Washer - Rubber	1
34	32104-76	Screw - Self Tapping	2
35	32104-118	Screw - Pan Hd.	2
36	63-2520	Decal - Panel Front	1
37	3296-47	Nut - Lock	4
38	63-3470	Decal - Warning	1
39	63-2720	Spring - Extension	1
40	63-2710	Cable - Traction	1
41	63-2700	Cable - Impeller	1
42	3296-42	Nut Lock	4
*	63-3420	Harness - Wire	1
*	12-8949	Loose Parts	1

*Not Illustrated

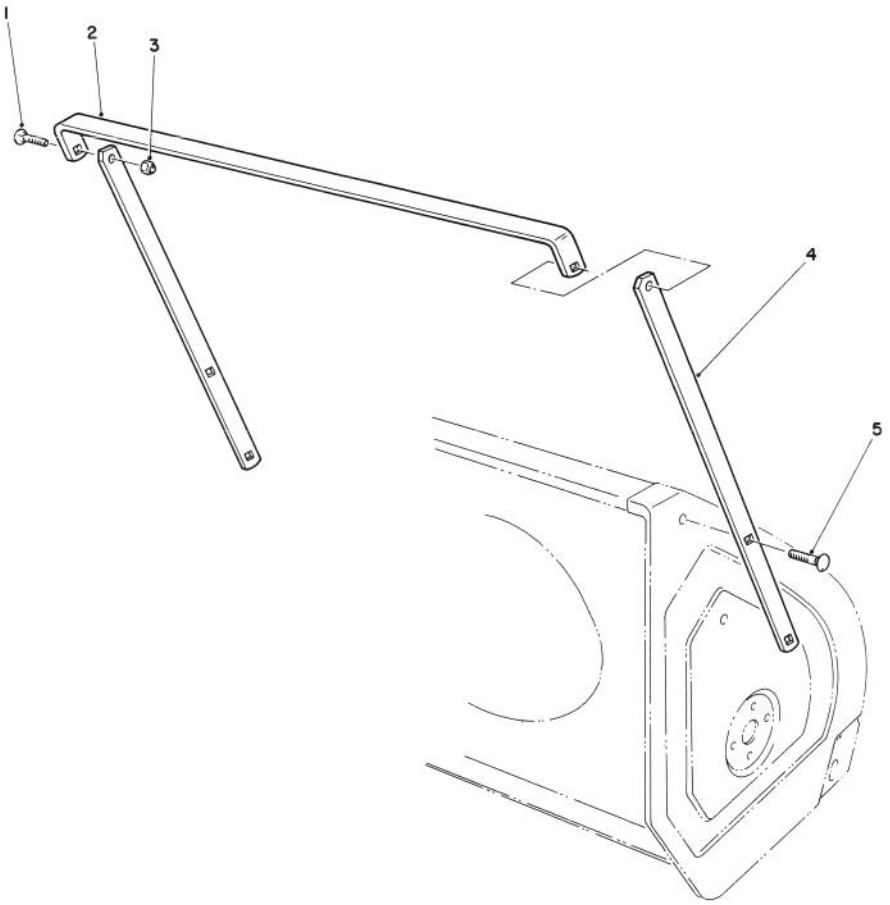

C-0068

DRIFT BREAKER ASSEMBLY (Optional)

Ref. No.	Part No.	Description	No. Used
1	3230-16	Bolt - Carriage	2
†2		Breaker - Top (24")	1
3	3296-29	Nut - Lock	6
†4		Breaker - Side	2

Ref. No.	Part No.	Description	No. Used
5	3230-1	Bolt - Carriage	4
*	66-7960	Drift Breaker Kit (Incl. Ref. #1-5)	1

*Not Illustrated
†Items not sold separately.

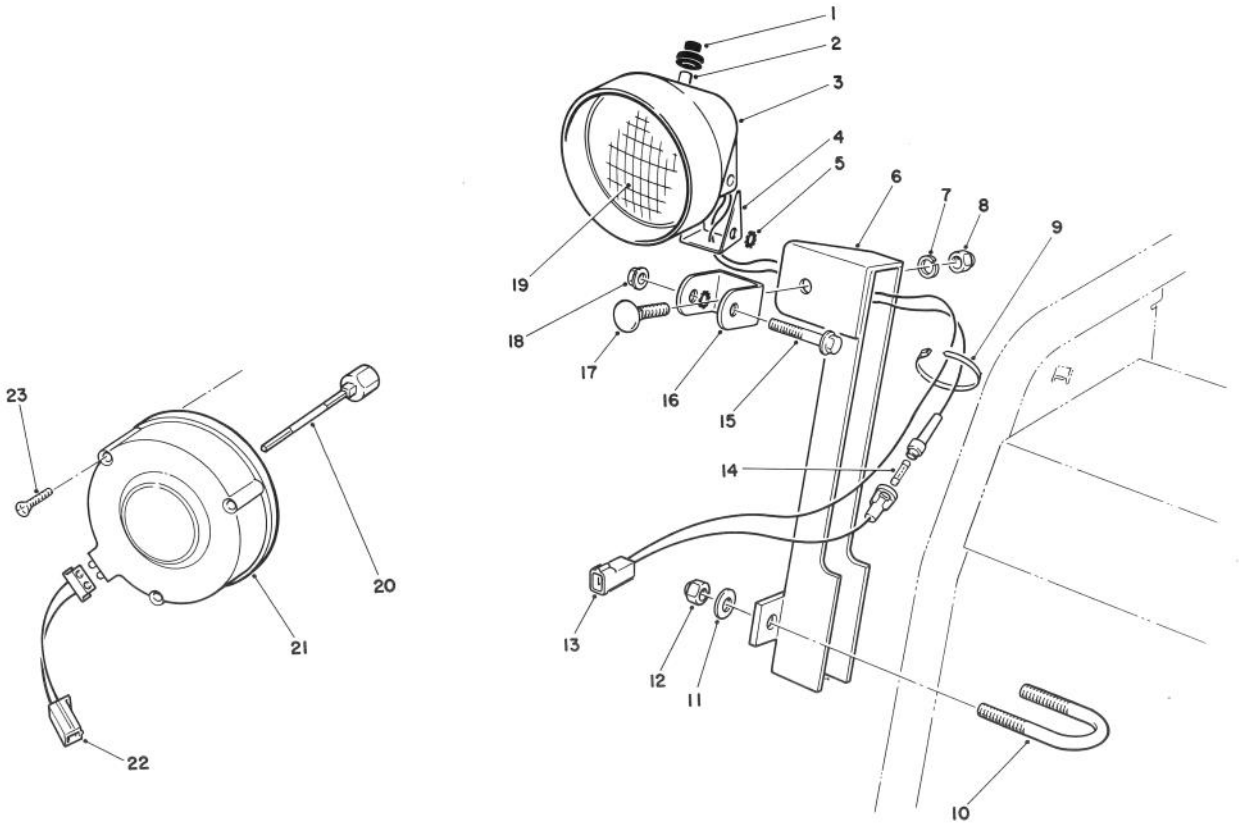

C-0070

LIGHT KIT NO. 66-7930 (Optional)

Ref. No.	Part No.	Description	No. Used
1	218-473	Boot - Switch	1
2	218-553	Switch Assembly	1
3	218-552	Bucket - Headlamp	1
4	218-554	Bracket	1
5	3255-8	Washer - Lock	2
6	68-7110	Mount - Lamp	1
7	3253-21	Washer - Lock	1
8	3217-7	Nut - Hex.	1
9	3290-378	Tie Wrap	2
10	68-7140	Bolt - U	1
11	3256-23	Washer - Flat	2
12	3296-29	Nut - Lock	2
13	218-555	Wire Assembly	1
†14		Fuse - 7-1/2 Amp.	1

Ref. No.	Part No.	Description	No. Used
15	322-13	Screw - Hex. Flange Hd.	1
16	218-556	Bracket - U	1
17	3231-2	Bolt - Carriage	1
18	32128-35	Nut - Flange Lock	1
19	218-16	Bulb - Sealed Beam	1
20	2210-268	Shaft - Alternator 3"	1
*	2210-288	Shaft - Alternator 4"	1
21	2210-274	Alternator	1
22	2210-272	Connector - Light	1
23	2210-273	Screw - Self Tapping	3
*	54-9871	Headlamp Assembly (Incl. Ref. #1-5, 7, 8 & 13-19)	1
*	66-7930	Light Assembly (Incl Ref.#1-23)	1

*Not Illustrated
†Obtain Locally

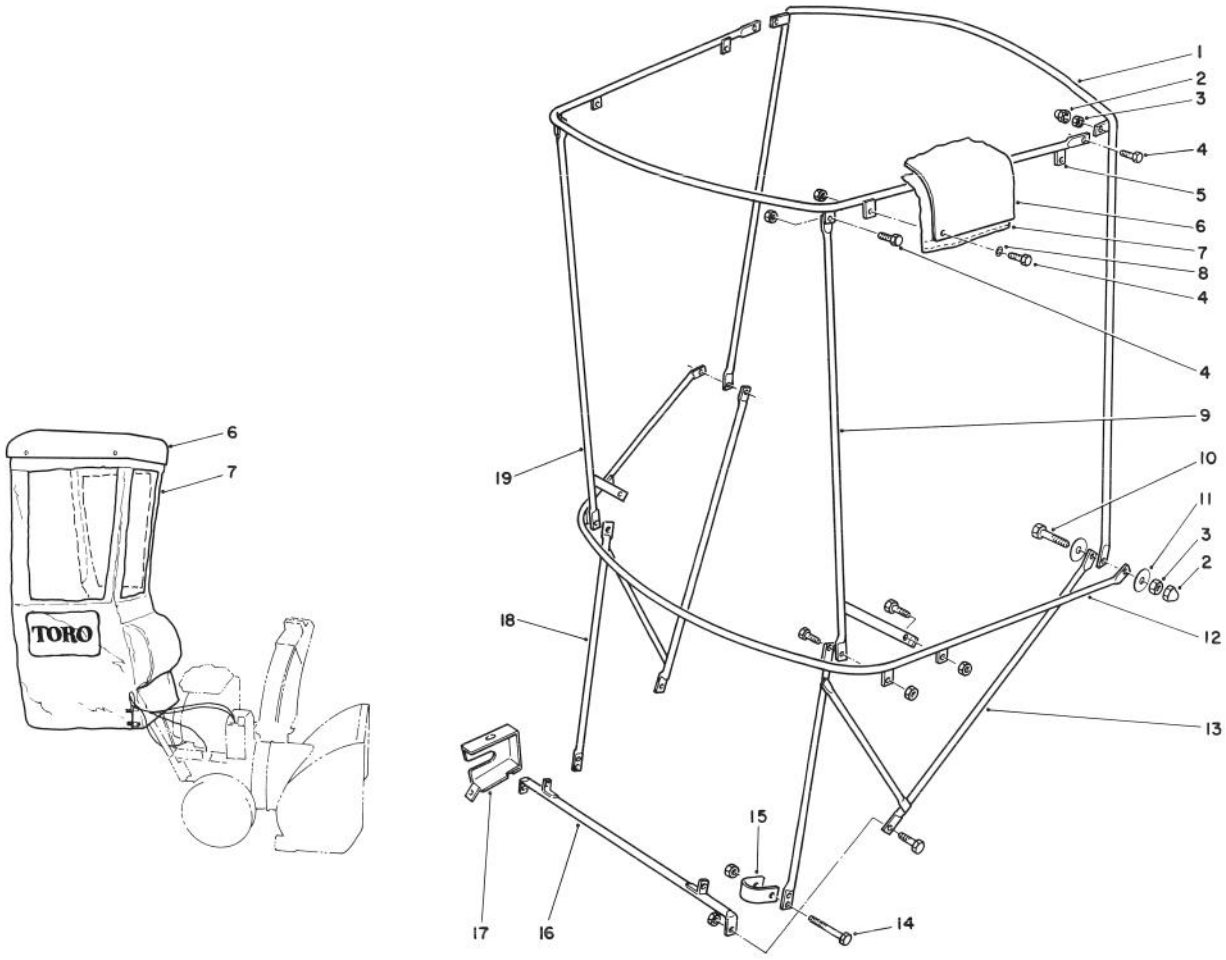

C-0138

SNOW CAB ASSEMBLY NO. 68-9500 (Optional)

Ref. No.	Part No.	Description	No. Used
1	70-2260	Bow - Vertical	1
2	70-2240	Cover - Nut	4
3	32153-4	Nut - Lock	18
4	321-4	Screw - Hex. Hd.	14
5	70-2250	Frame - Top	1
†6		Top - Plastic	1
†7		Cover - Vinyl	1
8	3256-1	Washer - Flat	4
9	70-2220	Post - Corner L.H.	1
10	321-6	Screw - Cap Hex. Hd.	2

Ref. No.	Part No.	Description	No. Used
11	3256-58	Washer - Fender	4
12	70-2270	Bow - Horizontal	1
13	66-6230	Bracket - Attaching L.H.	1
14	321-11	Screw - Cap Hex. Hd.	2
15	66-6240	Clamp - U	2
16	66-6210	Bracket - Base Attaching	1
17	63-3330	Cover - Lever	1
18	66-6220	Bracket - Attaching R.H.	1
19	70-2230	Post - Corner R.H.	1

†Not sold separate

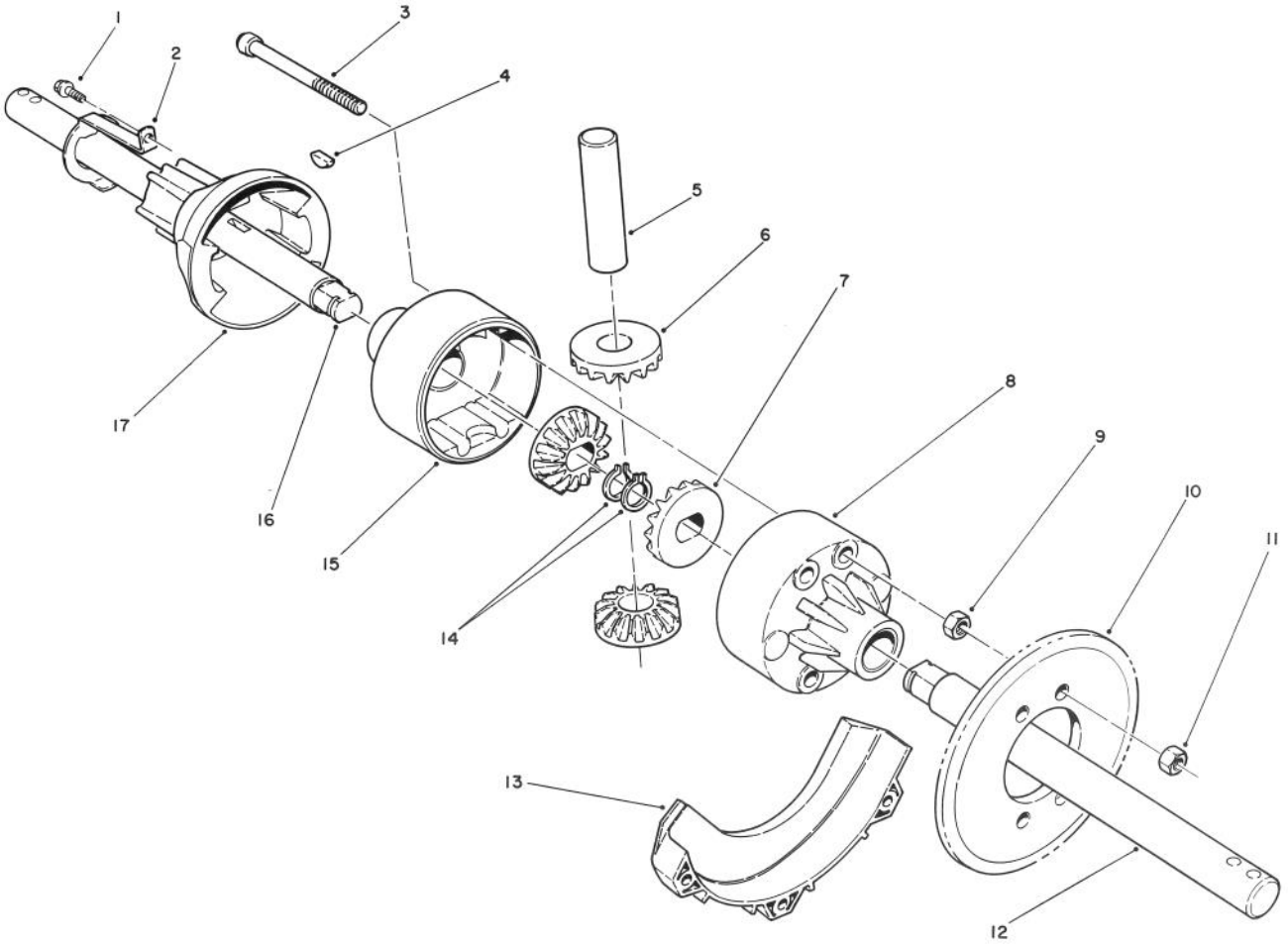

C-0137

DIFFERENTIAL KIT MODEL NO. 38038 (Optional)

Ref. No.	Part No.	Description	No. Used
1	32144-73	Screw - Hex. Washer Hd.	1
2	68-9260	Spring - Lockout	1
3	3274-82	Screw - Hex. Socket Hd.	4
4	3257-41	Key - Woodruff	2
5		Shaft - Cross	1
6		Gear - Cross Shaft Pinion	2
7		Gear - Side Pinion	2
8	68-9220	Housing - Female	1
9	3217-6	Nut - Hex.	4
10	68-9270	Sprocket - 27T	1

Ref. No.	Part No.	Description	No. Used
11	3296-47	Nut - Lock	4
12	68-9230	Shaft - Differential L.H.	1
13	68-9310	Guard - Chain R.H.	1
14	32120-93	Ring - Retaining	2
15	68-9210	Housing - Male	1
16	68-9240	Shaft - Differential R.H.	1
17	68-9250	Coupling - Differential	1
*	68-8410	Cover - Lower Belt	1
*	68-9390	Decal - Caution/Instructions	1
*	68-9280	Gear Set (Incl. Ref. #5-7)	1

*Not Illustrated

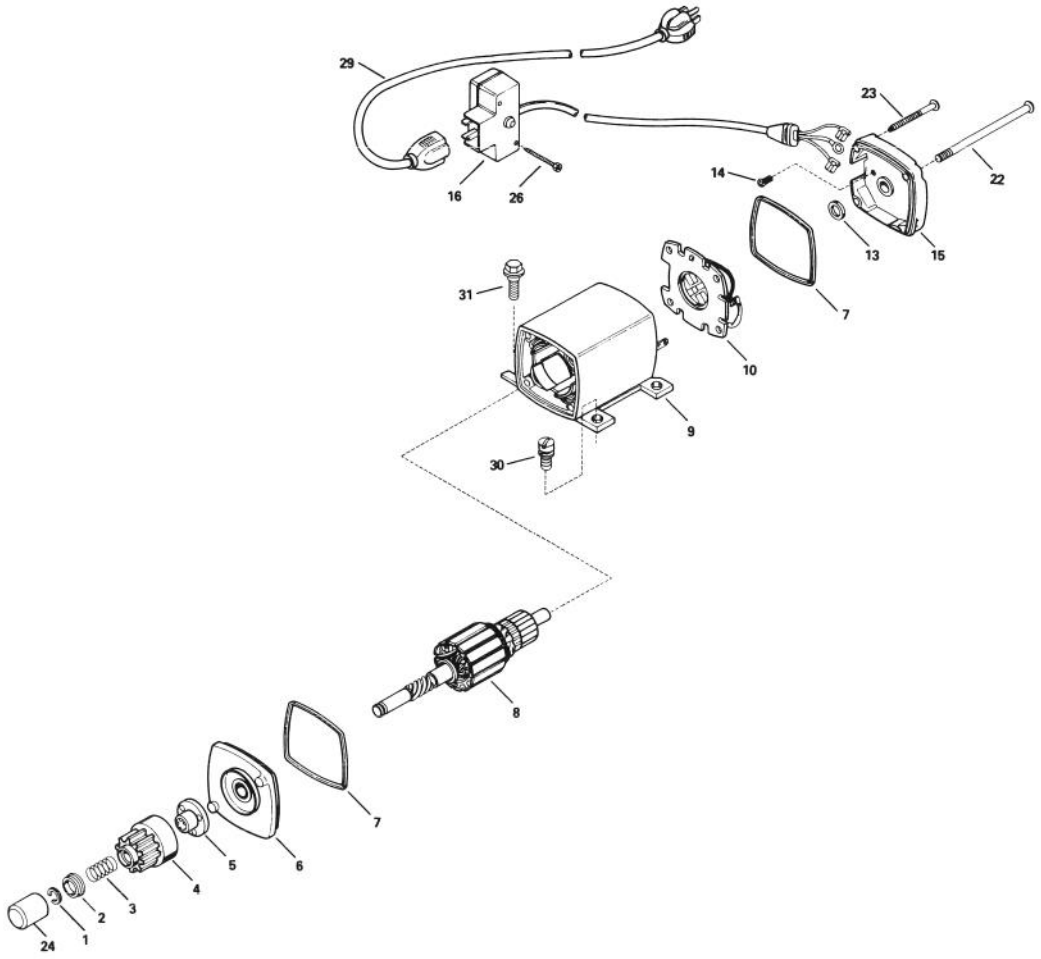

ELECTRIC STARTER MOTOR KIT NO. 37–4810 (Optional)

Ref. No.	Part No.	Description	No. Used
1	33842	Ring – Retainer	1
2	33430	Retainer – Spring	1
3	33431	Spring – Anti-Drift	1
4	33432	Gear	1
5	33433	Nut – Engaging	1
6	35449	Drive End Cap Assembly (Incl. Ref. #7)	1
7	35450	Seal – O-Ring	2
8	33541A	Armature	1
9	35451	Housing Assembly	1
10	35452	Card Assembly – Brush	1
13	590500	Washer – Thrust	1

Ref. No.	Part No.	Description	No. Used
14	33441	Screw – Ground	1
15	35453	Commutator End Cap Assy. (Incl. Ref. #7)	1
16	35454	Switch Box Assembly	1
22	35455	Bolt – Case	2
23	35456	Screw – Grounding	1
24	33451	Cover – Dust	1
26	650819	Screw – Hex. Hd. Self Tap	2
29	32450A	Cord – Extension (10" 6')	1
30	30063	Screw – Fil. Hd.	2
31	650820	Screw – Shoulder Hex. Hd.	2

Note: Obtain individual items from your local Tecumseh dealer.

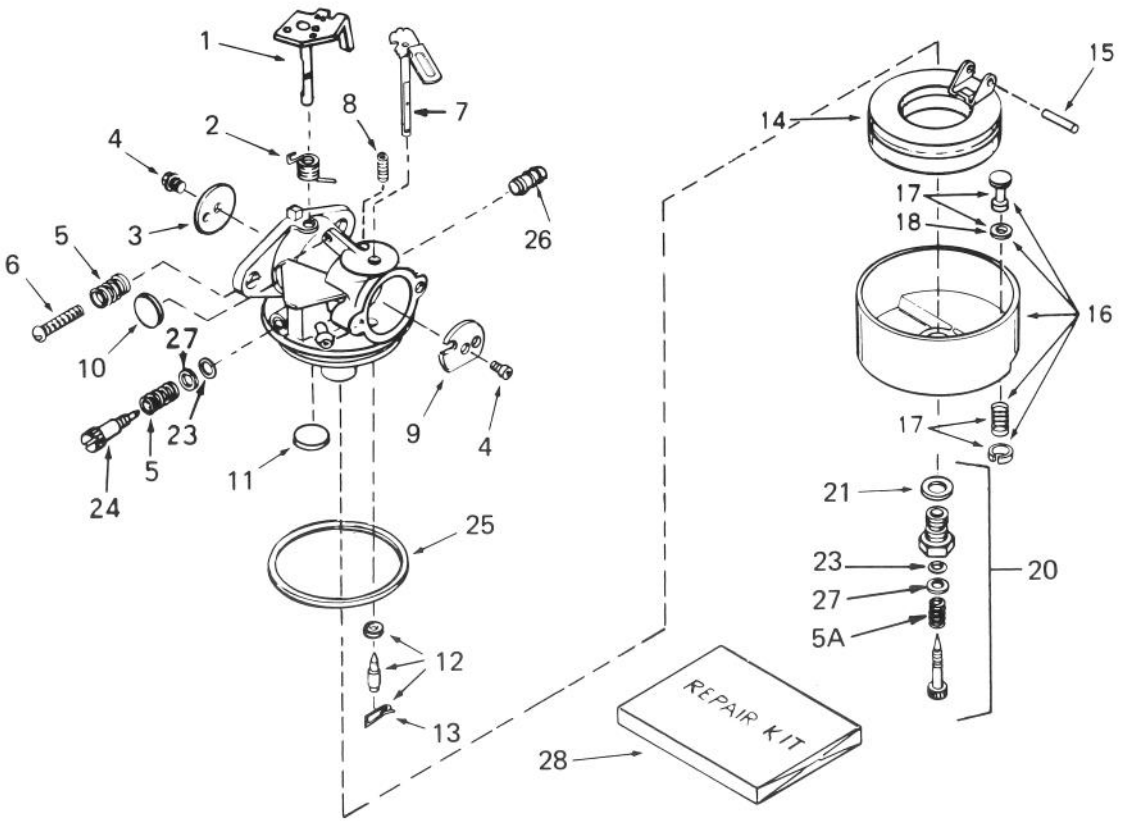

CARBURETOR TECUMSEH NO. 632334A

Ref. No.	Part No.	Description	No. Used
1	631776A	Shaft/Lever – Throttle	1
2	631970	Spring – Throttle Return	1
3	631778	Shutter – Throttle	1
4	650506	Screw – Shutter	2
5	630766	Spring – Regulating Screw	1
5A	630738	Spring – Adjustment Screw	1
6	650417	Screw – Idle Regulating	1
7	632112	Shaft/Lever – Choke	1
8	630735	Spring – Choke Positioning	1
9	632174	Shutter – Choke	1
*10	630748	Plug – Welch	1
*11	631027	Plug – Welch	1
*12	631021	Inlet Needle, Seat & Clip Assy. (Incl. Ref. #13)	1
13	631022	Clip – Inlet Needle	1
14	632019	Float – Carburetor	1

Ref. No.	Part No.	Description	No. Used
*15	631024	Shaft – Float	1
16	631951	Float Bowl Assembly (Incl. Ref. #17 & 18)	1
17	27136A	Drain Assembly (Incl. Ref. #18)	1
18	27554	Gasket – Bowl Drain	1
*20	632239	Adjustment Screw Assy. (Incl. Ref. #5A, 21, 23 & 27)	1
21	27110	Gasket – Bowl to Body	1
*23	630740	O-Ring – Adjustment Screw	1
*24	632281	Screw – Idle Adjustment	1
*25	631028	Gasket – Bowl to Body	1
26	632164	Fitting – Fuel Inlet	1
27	630739	Washer – Flat	1
28	632347	Kit – Repair	1

*Included in Repair Kit Ref. #28.

ENGINE TECUMSEH MODEL NO. HM80–155386P

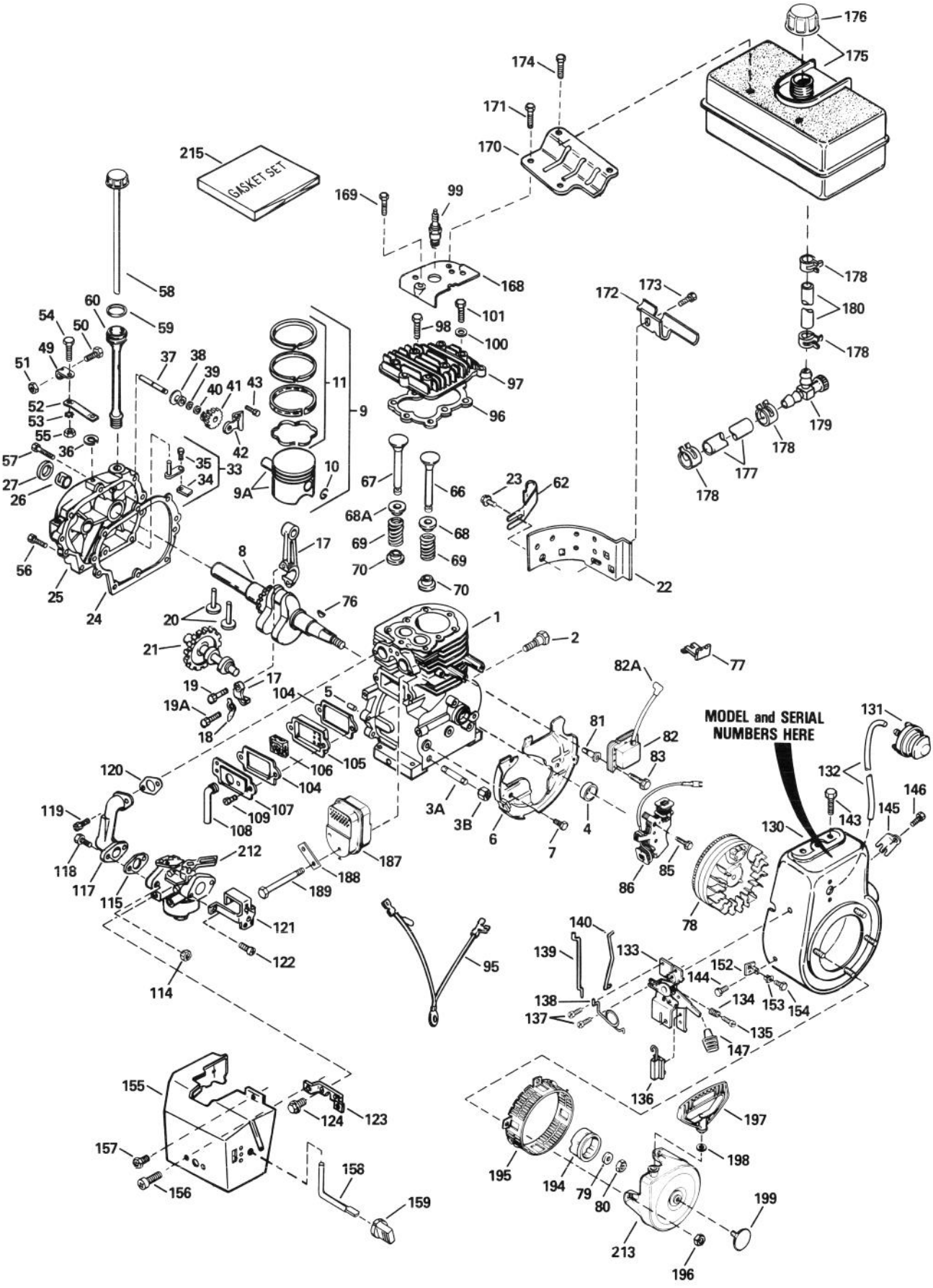

ENGINE TECUMSEH MODEL NO. HM80-155386P

Ref. No.	Part No.	Description	No. Used
1	35385	Cylinder (Incl. Ref. #4 & 5)	1
2	650820	Screw - Shoulder Hex. Hd.	2
3A	34171	Nipple - Pipe	1
3B	30969	Cap - Oil Drain	1
4	35319	Seal 0 Oil	1
5	27652	Pin - Dowel	2
6	35326	Baffle - Blower Housing	1
7	650561	Screw - Hex. Washer Hd.	2
8	35571	Crankshaft	1
9	34552	Piston Pin & Ring Assy. (Std.) (Incl. Ref. #9A-11)	1
*	34553	Piston Pin & Ring Assy. (.01" OS.) (Incl. Ref. #9A-11)	1
*	34554	Piston Pin & Ring Assy. (.02" OS.) (Incl. Ref. #9A-11)	1
9A	34329A	Piston & Pin Assy. (Std.) (Incl. Ref. #10)	1
*	34330A	Piston & Pin Assy. (.01" OS.) (Incl. Ref. #10)	1
*	34331A	Piston & Pin Assy. (.02" OS.) (Incl. Ref. #10)	1
10	27888	Ring - Piston Pin Retaining	2
11	34332	Ring Set - Piston (Std.)	1
*	34333	Ring Set - Piston (.01" OS.)	1
*	34334	Ring Set - Piston (.02" OS.)	1
17	35373A	Connecting Rod Assy. (Incl. Ref. #18,19 & 19A)	1
18	35374	Dipper - Oil	1
19	650908	Bolt - Connecting Rod	1
19A	650882	Bolt - Connecting Rod	1
20	34034	Lifter - Valve	2
21	35375	Camshaft	1
22	33273A	Extension - Blower Housing	1
23	650128	Screw - Fill. Hd.	1
†24	35262	Gasket - Cylinder Cover	1
25	35376	Cylinder Cover Assy. (Incl. Ref. #26, 27 & 37)	1
26	35377	Bearing - Cylinder Cover	1
27	35319	Seal - Oil	1
33	30699C	Governor Rod Assy. (Incl. Ref. #34-35)	1
34	30700	Yoke - Governor	1
35	650494	Screw - Fil. Hd.	1
36	29642	Ring - Retaining	1
37	31845	Shaft - Governor	1
38	30588A	Spool - Governor	1
39	35479	Washer - Flat	1
40	29193	Ring - Retaining	1
41	35378	Gear - Governor (Incl. Ref. #39)	1
42	33369	Bracket - Governor Gear	1
43	650836	Screw - Hex. Washer Hd.	2

Ref. No.	Part No.	Description	No. Used
49	29916	Clamp - Governor Lever	1
50	29826	Screw - Hex. Washer Hd.	1
51	29216	Nut - Lock	1
52	33454	Lever - Governor	1
53	29918	Washer - Lock	1
54	650548	Screw - Hex. Washer Hd.	1
55	30322	Nut - Lock	1
56	650832	Screw - Hex. Washer Hd.	1
57	650833	Screw - Hex. Washer Hd.	7
58	35555	Dipstick - Oil	1
59	35499	Seal - O-Ring	1
60	35554	Tube - Oil Fill	1
62	35540	Clip - Fuel Tube	1
66	27878A	Valve - Exhaust (Std.) (Incl. Ref. #70)	1
*	27880A	Valve - Exhaust (.03" OS.) (Incl. Ref. #70)	1
67	34035	Valve - Intake (Std.) (Incl. Ref. #70)	1
*	34036	Valve - Intake (.03" OS.) (Incl. Ref. #70)	1
68	27882	Cap - Upper Valve Spring	1
68A	34689	Seal - Intake Valve2	
69	27881	Spring - Valve	2
70	32581	Cap - Lower Valve Spring	2
76	32589	Key - Flywheel .	1
77	29443	Clip - Spring	1
78	611093	Flywheel/Gear	1
79	650880	Washer - Lock	1
80	650881	Nut - Flywheel	1
81	650872	Stud - Solid State Mounting	2
82	35135	Solid State Assembly	1
82A	610118	Cover - Spark Plug	1
83	650814	Screw - Hex. Hd.	1
85	650873	Screw	1
86	611111	Alternator Coil	1
95	35253	Wire - Ground	1
†96	34041A	Gasket - Cylinder Head	1
97	34030	Head Cylinder	1
98	6021A	Screw - Hex. Flange Hd.	7
99	35395	Plug - Spark (Champion RJ-19LM or Equivalent)	1
100	650691	Washer - Flat	2
101	650727	Screw - Special	2
†104	27896A	Gasket - Breather	2
105	28423	Body - Breather	1
106	28424	Element - Breather	1
107	28425	Cover - Breather	1
108	35350	Tube - Breather	1
109	650128	Screw - Fil. Hd.	2
114	29752	Nut/Lockwasher	2
†115	33263	Gasket - Carburetor	1
117	33877	Pipe - Intake	1
118	30088A	Screw - Fil. Hd.	2

*Not Illustrated
†Included in Gasket Set Ref. #33279G.

ENGINE TECUMSEH MODEL NO. HM80–155386P (Continued)

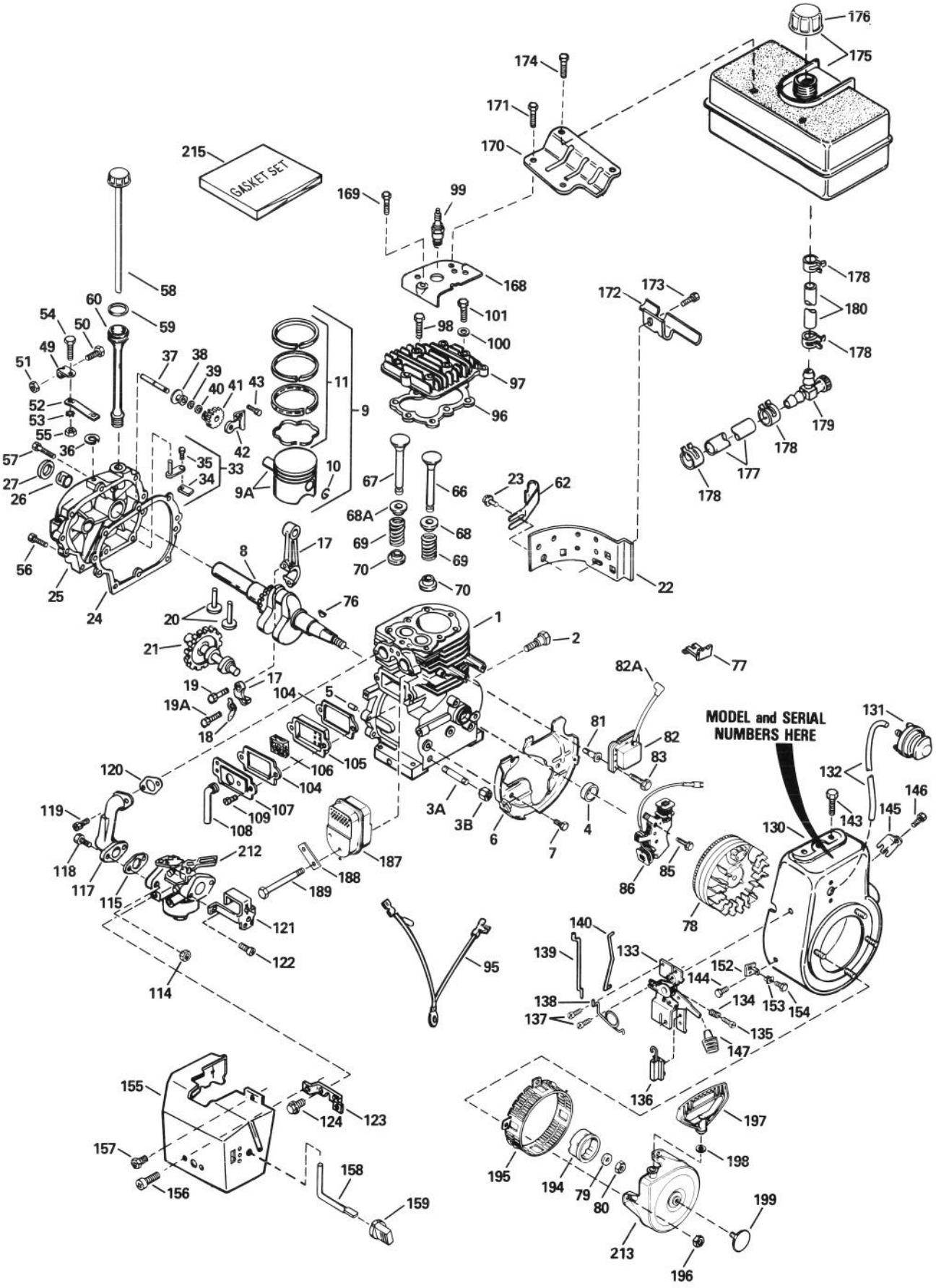

ENGINE TECUMSEH MODEL NO. HM80–155386P (Continued)

Ref. No.	Part No.	Description	No. Used
119	650378	Screw – Fil. Hd.	2
†120	27915A	Gasket – Intake Pipe	1
121	34587	Bracket – Choke	1
122	28820	Screw – Fil. Hd.	2
123	33377	Bracket – Carburetor Cover	1
124	650767	Screw – Hex. Washer Hd.	2
130	35447	Housing – Blower	1
131	570682	Primer Assembly	1
132	32180C	Line – Primer	1
133	34677	Control Bracket Assembly (Incl. Ref. #134–136 & 138)	1
134	31342	Spring – Compression	1
135	650549	Screw – Fil. Hd.	1
136	610973	Terminal Assembly	1
137	650821	Screw – Hex. Washer Hd.	2
138	34663	Spring – Speed Control	1
139	34667	Link – Governor	1
140	33878	Link – Governor to Throttle	1
143	650788	Screw – Hex. Hd.	2
144	29747B	Screw – Hex. Hd.	2
145	33013	Cover – Starter Hole	1
146	650760	Screw – Pan Hd.	1
147	35440	Knob – Control	1
152	34126	Bracket – Grommet Mount	1
153	28545	Grommet – Plastic	1
154	650760	Screw – Pan Hd.	1
155	35057A	Cover – Carburetor	1
156	28942	Screw – Hex. Washer Hd.	2
157	650765	Screw – Hex. Washer Hd.	1

Ref. No.	Part No.	Description	No. Used
158	34586	Rod – Choke	1
159	35438	Knob – Choke	1
168	33272A	Cover – Cylinder Head	1
169	650802	Screw – Hex. Washer Hd.	1
170	34154	Plate – Fuel Tank	1
171	650713	Screw – Hex. Hd.	1
172	34155	Bracket – Fuel Tank	1
173	650561	Screw – Hex. Washer Hd.	1
174	650665	Screw – Hex. Washer Hd.	2
175	34156A	Fuel Tank Assy. (Incl. Ref. #176 & 178)	1
176	35355	Cap – Fuel Tank	1
177	30705	Line – Fuel	1
178	26460	Clamp – Fuel Line	4
179	32961	Valve – Fuel Shut-off	1
180	29774	Line – Fuel	1
187	35056	Muffler	1
188	31588	Plate – Lock	1
189	792093	Screw – Hex. Flange Hd.	2
194	35287	Hub – Starter	1
195	35446	Screen – Starter	1
196	29752	Nut/Lockwasher	4
197	590574	Handle – Starter	1
198	650168	Washer – Flat	1
199	35392	Plug – Starter	1
212	632334A	Carburetor Assembly (Incl. Gasket #33263)	1
213	590630	Rewind Starter Assembly	1
215	33279G	Gasket Set	1

†Included in Gasket Set Ref. #33279G.

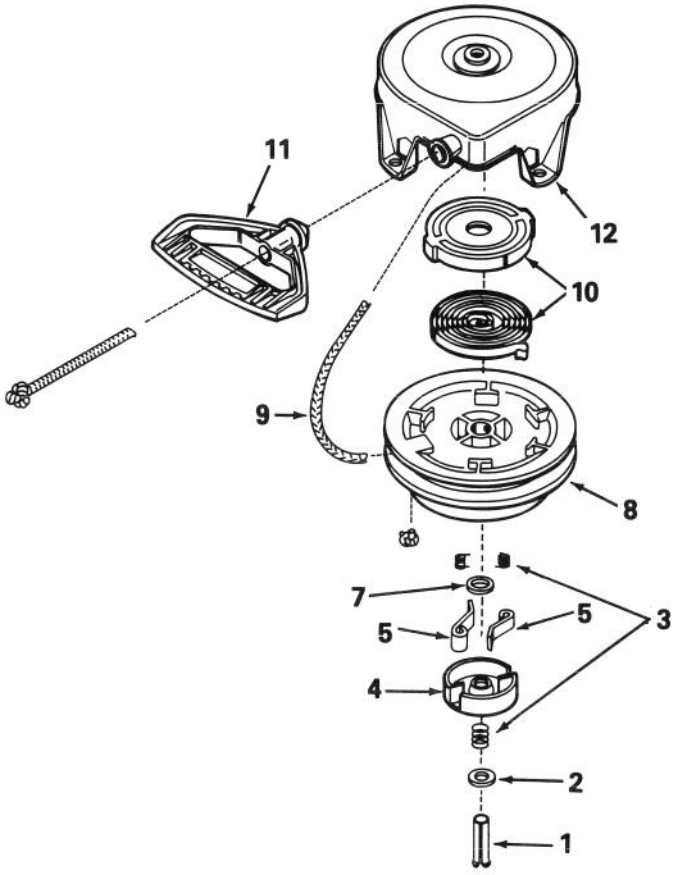

REWIND STARTER TECUMSEH NO. 590630

Ref. No.	Part No.	Description	No. Used
1	590599A	Pin – Spring (Incl. Ref. #7)	1
2	590600	Washer	1
3	590651	Springs – Brake & Dog	1
4	590627	Retainer	1
5	590641	Dog – Starter	2
7	590601	Washer	1

Ref. No.	Part No.	Description	No. Used
8	590628	Pulley	1
9	590451A	Rope – Starter	1
10	590629	Spring & Keeper Assembly	1
‡11	590574	Handle – Starter	1
12	590631	Starter Housing Assembly	1

‡Not Included in Starter Assembly.
Compliance with Radio Interference Regulations Certified.
Certifie Conforme au Reglement sur le Brouillage Radioelectrique.

Litho in U.S.A.
LTS-108617