Form Number 3358-426 Rev A

# CCR™ Powerlite®
## Snowthrower

**Model No. 38172 - 280000001 and up.**

# Parts Catalog

**Ordering Replacement Parts**

To order replacement parts, please supply the part number, the quantity, and the description of each part desired.

**Understanding Reference Numbers**

Each Identified part in an illustration has a reference number. The reference number for a part also appears in the parts list, along with other information about the part.

This catalog uses two special reference number formats, one to indicate parts in a service assembly and another to indicate the quantity of a given part in an illustration.

**Service Assembly Reference Numbers**

Parts in service assemblies have reference numbers in the form a:b. The a represents the reference number of the entire service assembly and the b represents a sequential number unique to each part within the service assembly.

For example, a wheel assembly might be identified by reference number 6, the tire by 6:1, the valve by 6:2, and the wheel by 6:3. When you order the assembly identified by reference number 6, you receive all parts identified by reference numbers 6:1, 6:2, and 6:3. However, you may also order any part individually. Reference numbers of this type appear in illustrations and in part lists.

**Reference Numbers Indicating Quantity**

In an illustration, if a reference number indicates more than one part, the reference number has the form nX y. The n represents the quantity of the part, the X is the multiplication symbol, and the y represents the reference number.

For example, in an illustration, the reference number 2X 37 means that two of the parts identified by reference number 37 are indicated.

© The Toro Company - 2007
All Rights Reserved

Register your product at www.Toro.com

# Contents


| Description | Page |
|---|---|
| Rotor Drive Assembly | 3 |
| Chute and Upper Shroud Assembly | 4 |
| Rotor Assembly | 5 |
| Engine, Rotor Housing and Sideplate Assembly | 6 |
| Handle and Lower Shroud Assembly | 7 |
| Engine Assembly Tecumseh TH098SA-1723F | 8 |
| Carburetor Assembly No. 640086A Tecumseh TH098SA-1723F | 10 |
| Rewind Starter No. 590745 Tecumseh TH098SA-1723F | 11 |


# Part Description Abbreviations

Part descriptions in this catalog may include the following abbreviations.

AR. . . . . as required
ASM. . . . . assembly
BBC. . . . . blade brake clutch
CARR. . . . . carriage
DEG. . . . . degrees
EXT. . . . . external
FH. . . . . flat head
GA. . . . . gauge
HD. . . . . heavy-duty
HF. . . . . hex flange
HH. . . . . hex head
HHF. . . . . hex head flange
HHFTF. . . . . hex head flange thread forming
HJ. . . . . hex jam
HLH. . . . . hex lag head
HOC. . . . . height-of-cut
HSBH. . . . . hex socket button head
HSFH. . . . . hex socket flat head
HSH. . . . . hex socket head
HWH. . . . . hex washer head
HWHTF. . . . . hex washer head thread forming
HYD. . . . . hydraulic
LH. . . . . left hand
NI. . . . . nylon insert
NPTF. . . . . national pipe thread fine
PFH. . . . . phillips flat head
PPH. . . . . phillips pan head
PPHTF. . . . . phillips pan head thread forming
PRH. . . . . phillips round head
PTH. . . . . phillips truss head
PTO. . . . . power-take-off
RH. . . . . right hand
ROPS. . . . . roll-over protection system
SFH. . . . . slotted fillister head
SHH. . . . . slotted hex head
SHWH. . . . . slotted hex washer head
SPH. . . . . slotted pan head
SQH. . . . . square head
SRH. . . . . slotted round head
STD. . . . . standard
TAP. . . . . self tapping
TTH. . . . . torx truss head

# Footnotes

❶ Not illustrated
❷ Not serviced separately
❸ Obtain from your local Tecumseh dealer
❹ Included in Repair Kit 632760

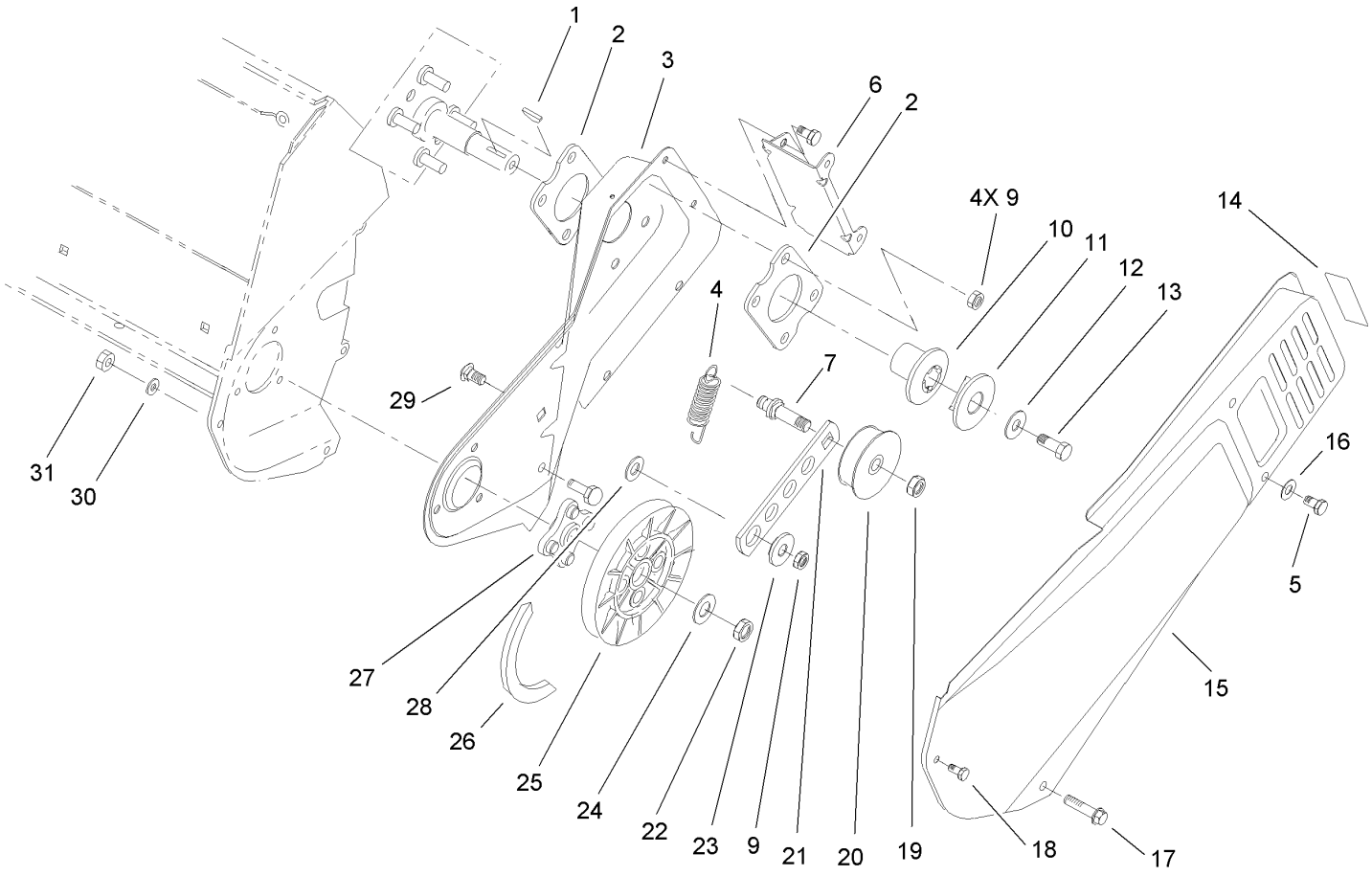


# Rotor Drive Assembly

| Ref | Part No. | Qty. | Description |
|---|---|---|---|
| 1 | 3257-3 | 1 | Key-Woodruff |
| 2 | 71-5290-03 | 2 | Plate-Engine |
| 3 | 95-7945-03 | 1 | Sideplate-LH |
| 4 | 75-9020 | 1 | Spring-Extension |
| 5 | 32144-4 | 4 | Screw-HWH |
| 6 | 75-8870-03 | 1 | Bracket-Cover, Belt |
| 7 | 75-8720 | 1 | Pin-Idler |
| 9 | 3296-29 | 5 | Nut-Lock, NI |
| 10 | 71-5050 | 1 | Hub-Half Sheave |
| 11 | 71-5060 | 1 | Cap-Half Sheave |
| 12 | 3256-71 | 1 | Washer-Flat |
| 13 | 3235-6 | 1 | Screw-HH |
| 14 | 104-2767 | 1 | Decal-Warning |
| 15 | 75-8830-03 | 1 | Cover-Belt |
| 16 | 3256-1 | 2 | Washer-Flat |
| 17 | 46-8094 | 3 | Screw-Plastite |
| 18 | 32105-23 | 1 | Screw |
| 19 | 3296-59 | 1 | Nut-Lock, NI |
| 20 | 71-5260 | 1 | Pulley-Idler |
| 21 | 75-9050 | 1 | Arm-Idler |
| 22 | 3296-38 | 1 | Nut-Lock, NI |
| 23 | 75-8700 | 1 | Bushing-Idler |
| 24 | 3256-25 | 1 | Washer-Flat |
| 25 | 75-8750 | 1 | Pulley-Driven |

| Ref | Part No. | Qty. | Description |
|---|---|---|---|
| 26 | 75-9010 | 1 | V-Belt |
| 27 | 75-8740 | 1 | Hub |
| 28 | 25-5640 | 1 | Washer |
| 29 | 3230-23 | 1 | Screw-CARR |
| 30 | 3256-14 | 1 | Washer-Flat |
| 31 | 3296-2 | 1 | Nut-Lock |

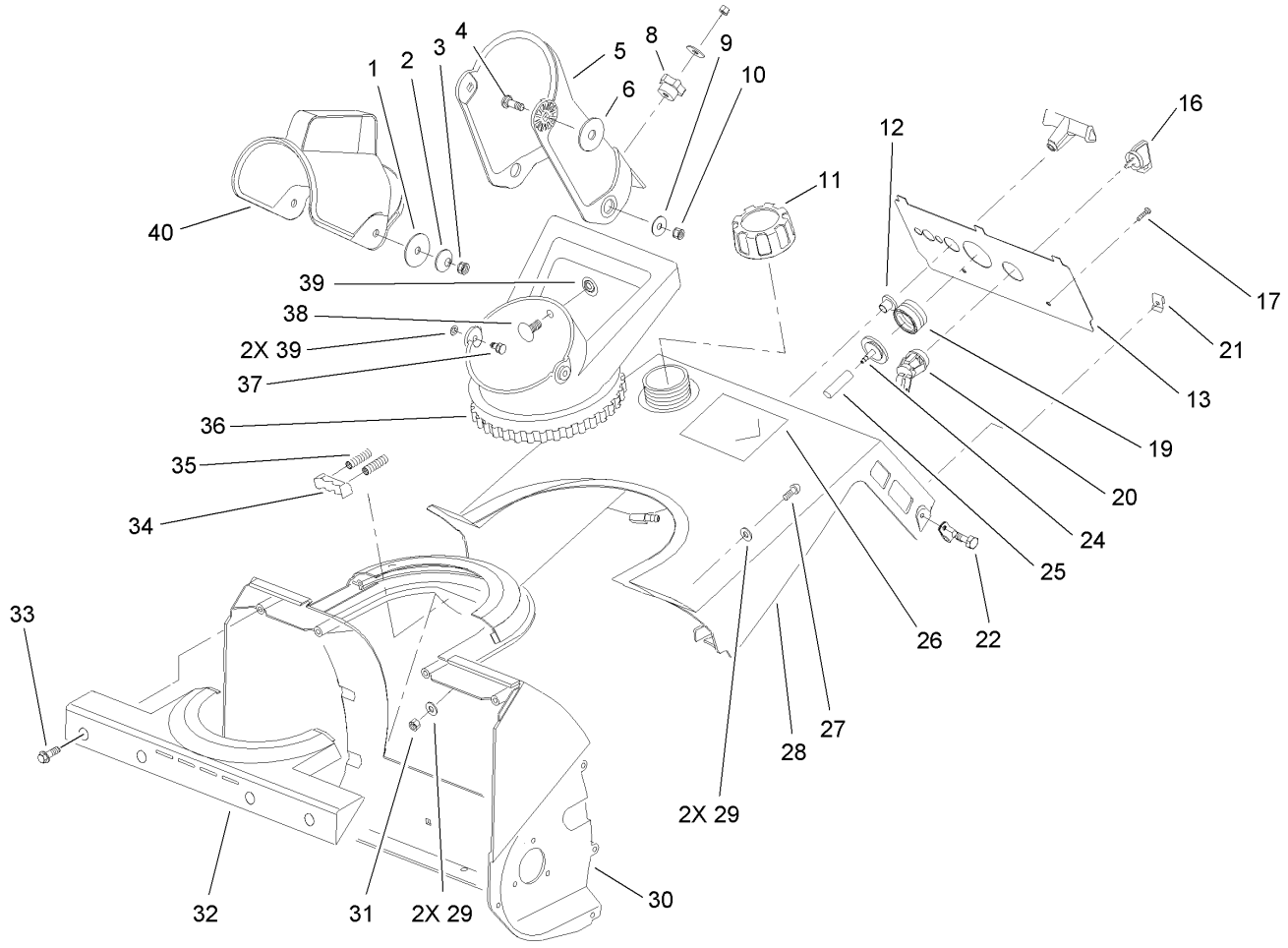


# Chute and Upper Shroud Assembly

| Ref | Part No. | Qty. | Description |
|---|---|---|---|
| 1 | 3256-68 | 2 | Washer-Flat |
| 2 | 3290-340 | 2 | Washer-Belleville |
| 3 | 3296-29 | 2 | Nut-Lock, NI |
| 4 | 3230-2 | 2 | Bolt-CARR |
| 5 | 112-6649 | 1 | Chute-French/English |
| 6 | 95-1905 | 2 | Washer-Rubber |
| 8 | 233-67 | 1 | Knob-Chute |
| 9 | 3256-81 | 2 | Washer-Flat |
| 10 | 3296-56 | 2 | Nut-Lock, NI |
| 11 | 104-4133 | 1 | Gas Cap ASM |
| 12 | 23-7470 | 1 | Guide-Rope, Starter |
| 13 | 112-8100 | 1 | Control Panel ASM |
| 16 | 63-8360 | 1 | Key-Ignition |
| 17 | 32144-53 | 2 | Screw-SHWH |
| 19 | 66-7460 | 1 | Bulb-Primer |
| 20 | 40-5940 | 1 | Switch |
| 21 | 49-1490 | 2 | Nut |
| 22 | 32144-89 | 2 | Screw-Forming, Thread |
| 24 | 44-2750 | 1 | Body-Primer |
| 25 | 44-3173 | 1 | Hose-Primer |
| 26 | 108-5081 | 1 | Decal-Shroud |
| 27 | 3250-32 | 2 | Screw-PPH |
| 28 | 105-2994 | 1 | Shroud-Tank, Gas Upper |
| 29 | 3256-1 | 4 | Washer-Flat |

| Ref | Part No. | Qty. | Description |
|---|---|---|---|
| 30 | 75-8660 | 1 | Housing |
| 31 | 3296-42 | 2 | Nut-Lock, NI |
| 32 | 75-8650 | 1 | Retainer-Chute |
| 33 | 46-8094 | 4 | Screw-Plastite |
| 34 | 75-9160 | 1 | Detent-Chute |
| 35 | 75-9170 | 2 | Spring-Compression |
| 36 | 75-8670 | 1 | Handle-Chute |
| 37 | 321-3 | 2 | Screw-HH |
| 38 | 3229-11 | 1 | Screw-CARR |
| 39 | 32115-15 | 3 | Pushnut-Retainer, Bolt |
| 40 | 75-8770 | 1 | Deflector-Chute |

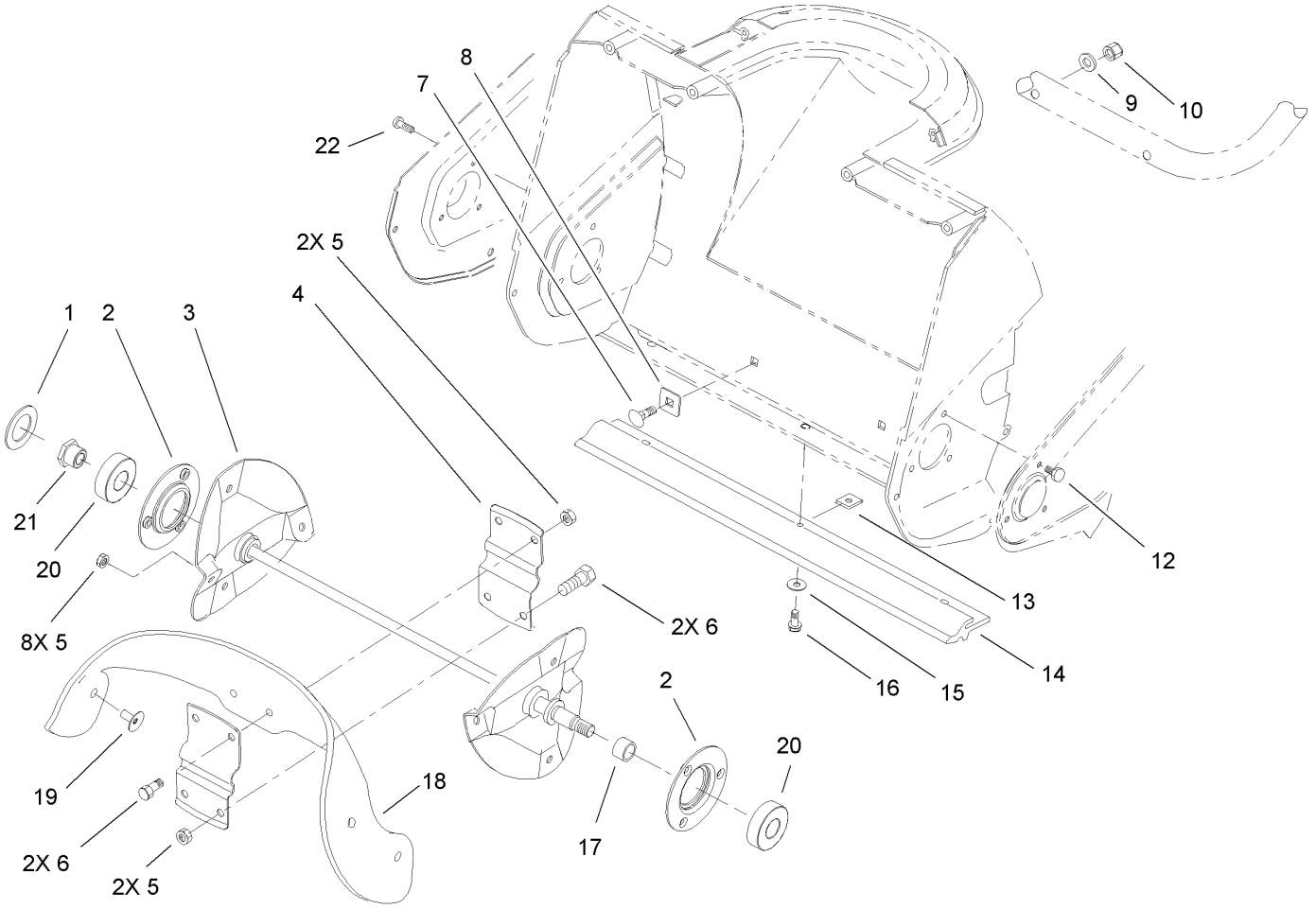


# Rotor Assembly

| Ref | Part No. | Qty. | Description |
|---|---|---|---|
| 1 | 75-9180 | 1 | Washer-Rubber |
| 2 | 112-8105 | 2 | Flange-Bearing |
| 3 | 75-8840-03 | 1 | Rotor Shaft ASM |
| 4 | 75-8880-03 | 2 | Support-Rotor |
| 5 | 3296-56 | 12 | Nut-Lock, NI |
| 6 | 3234-33 | 4 | Screw-HHF |
| 7 | 3229-5 | 2 | Screw-CARR |
| 8 | 75-9040 | 2 | Washer-Square |
| 9 | 3-7501 | 2 | Washer |
| 10 | 3296-42 | 2 | Nut-Lock, NI |
| 12 | 112-8124 | 3 | Screw-HH, Taptite |
| 13 | 32115-19 | 3 | Nut-Speed, U Type |
| 14 | 75-8780 | 1 | Scraper |
| 15 | 3256-14 | 3 | Washer-Flat |
| 16 | 32144-34 | 3 | Screw-Forming, Thread |
| 17 | 75-8710 | 1 | Spacer |
| 18 | 84-1980 | 2 | Blade-Rotor |
| 19 | 84-1970 | 8 | Screw |
| 20 | 100-1048 | 2 | Bearing-Ball |
| 21 | 75-8690 | 1 | Nut |
| 22 | 32144-85 | 3 | Screw-HWH |

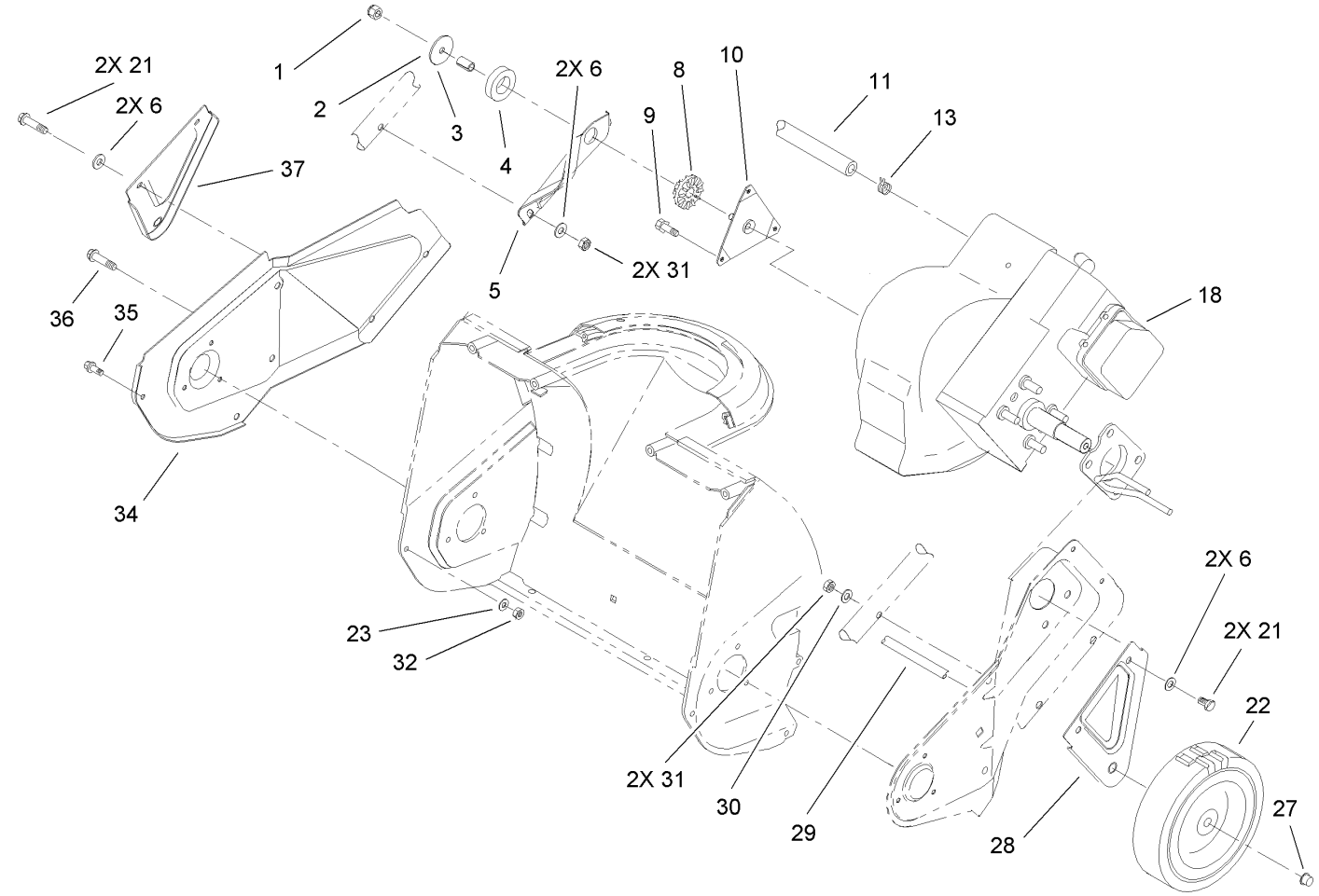


# Engine, Rotor Housing and Sideplate Assembly

| Ref | Part No. | Qty. | Description |
|---|---|---|---|
| 1 | 3296-56 | 1 | Nut-Lock, NI |
| 2 | 3256-58 | 1 | Washer-Flat |
| 3 | 80-0650 | 1 | Spacer-Tubular |
| 4 | 95-1903 | 1 | Ring-Isolator |
| 5 | 75-8980-03 | 1 | Bracket-Support, Engine |
| 6 | 3256-1 | 6 | Washer-Flat |
| 8 | 75-9100 | 1 | Bushing-Isolator |
| 9 | 94-2789 | 3 | Screw |
| 10 | 92-6012 | 1 | Bracket And Stud ASM |
| 11 | 110-3447 | 1 | Hose-Fuel |
| 13 | 2412-98 | 2 | Clamp |
| ❷❸18 | | 1 | Engine-Tecumseh, Th098Sa-1723F |
| 21 | 321-10 | 4 | Screw-HH |
| 22 | 23-3250 | 2 | Wheel |
| 23 | 3256-14 | 1 | Washer-Flat |
| 27 | 3290-320 | 2 | Retainer-Push On |
| 28 | 75-8910-03 | 1 | Bracket-Wheel, LH |
| 29 | 27-0062 | 1 | Axle |
| 30 | 3-7501 | 2 | Washer |
| 31 | 3296-42 | 4 | Nut-Lock, NI |
| 32 | 3296-2 | 1 | Nut-Lock |
| 34 | 75-8820-03 | 1 | Plate-Side, RH |
| 35 | 32105-23 | 1 | Screw |

| Ref | Part No. | Qty. | Description |
|---|---|---|---|
| 36 | 46-8094 | 3 | Screw-Plastite |
| 37 | 75-8900-03 | 1 | Bracket-Wheel, RH |

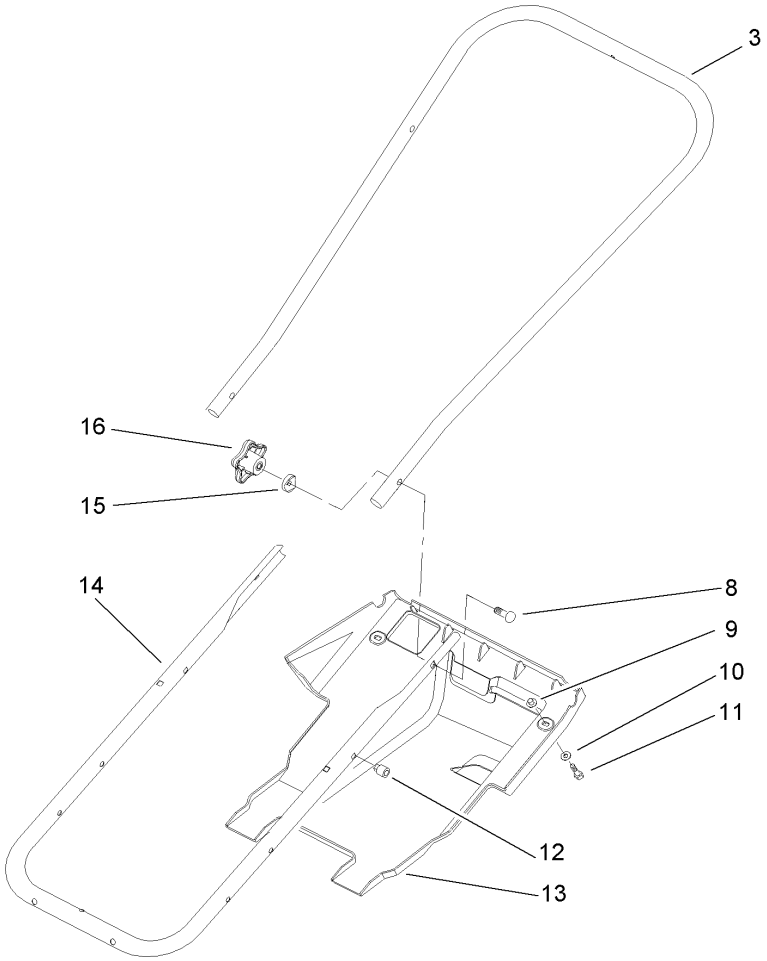


# Handle and Lower Shroud Assembly

| Ref | Part No. | Qty. | Description |
|---|---|---|---|
| 3 | 75-9070-03 | 1 | Handle-Upper |
| 8 | 92-2260 | 2 | Screw-Handle |
| 9 | 605120 | 2 | Nut-Clip |
| 10 | 3256-14 | 2 | Washer-Flat |
| 11 | 32144-34 | 2 | Screw-Forming, Thread |
| 12 | 32115-17 | 2 | Nut-Expansion |
| 13 | 75-8790 | 1 | Shroud |
| 14 | 75-9060-03 | 1 | Tube-Frame |
| 15 | 107-3844 | 2 | Washer |
| 16 | 106-4161 | 2 | Knob-Handle |

# Engine Assembly
# Tecumseh TH098SA-1723F

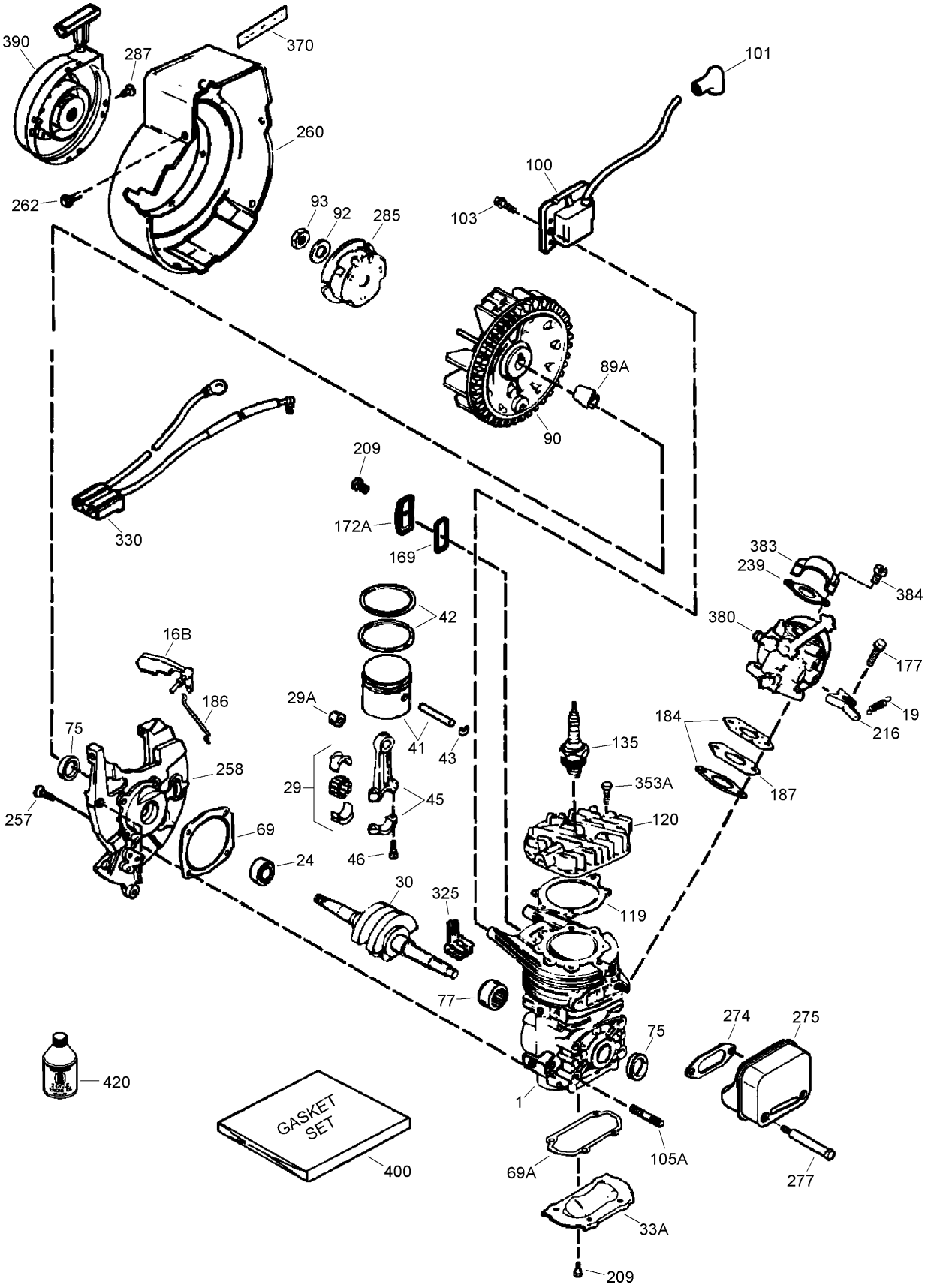

# Engine Assembly
# Tecumseh TH098SA-1723F

| Ref | Part No. | Qty. | Description |
|---|---|---|---|
| ❸1 | 710515A | 1 | Short Block-Replacement |
| ❸16B | 490291A | 1 | Vane-Air |
| ❸19 | 570707 | 1 | Spring-Extention (Governor) |
| ❸24 | 530110 | 1 | Bearing-Ball |
| ❸29 | 530150A | 1 | Needle Bearing And Liner Set (37 Needle) |
| ❸29A | 530104A | 1 | Bearing-Cartridge |
| ❸30 | 290602 | 1 | Crankshaft |
| ❸33A | 570644 | 1 | Plate-Cover |
| ❸41 | 310294A | 1 | Piston And Pin ASM |
| ❸42 | 310289A | 1 | Ring Set |
| ❸43 | 310167 | 1 | Ring-Retaning (Piston Pin) |
| ❸45 | 310235C | 1 | Connecting Rod ASM (Includes 29) |
| ❸46 | 650633 | 2 | Bolt-Rod, Connecting |
| ❸69 | 510292A | 1 | Gasket-Cover, Cylinder |
| ❸75 | 510319 | 2 | Seal-Oil |
| ❸77 | 530105 | 1 | Bearing-Cartridge |
| ❸89A | 611032 | 1 | Sleeve-Adapter |
| ❸90 | 611066 | 1 | Flywheel |
| ❸92 | 650815 | 1 | Washer-Belleville |
| ❸93 | 650390 | 1 | Nut-Flywheel |
| ❸100 | 34443C | 1 | Ignition-State, Solid |
| ❸101 | 610118 | 1 | Cover-Spark Plug |
| ❸103 | 651007 | 2 | Screw (T-15, 10-24 X 15/16) |
| ❸105A | 650796 | 4 | Stud |
| ❸119 | 510274A | 1 | Gasket-Head, Cylinder |
| ❸120 | 250240B | 1 | Head-Cylinder |
| ❸135 | 611049 | 1 | Spark Plug-Resistor (R C J 8Y) |
| ❸169 | 510323A | 1 | Gasket-Plate, Cover |
| ❸172A | 570708 | 1 | Cover-Release, Compression |
| ❸177 | 650959 | 2 | Screw (5/32 Allen, 1/4-20 X 1) |
| ❸184 | 510326A | 2 | Gasket-Carburetor |
| ❸186 | 490322 | 1 | Governor-Link |
| ❸187 | 570438A | 1 | Spacer |
| ❸209 | 650579 | 4 | Screw (T-25, 10-24 X 1/2) |
| ❸216 | 570645 | 1 | Lever-Adjusting, Rpm |
| ❸239 | 35815 | 1 | Gasket-Cleaner, Air |
| ❸257 | 650911 | 4 | Screw (T-30, 1/4-20 X 5/8) |
| ❸258 | 350422 | 1 | Base-Housing, Blower |
| ❸260 | 350437 | 1 | Housing-Blower |
| ❸262 | 650737 | 4 | Screw (1/4-20 X 1/2) |
| ❸274 | 510207A | 1 | Gasket-Exhaust |
| ❸275 | 390332 | 1 | Muffler (Includes 274, 277) |
| ❸277 | 650869 | 2 | Screw (1/4-20 X 2-3/4) |
| ❸285 | 590551A | 1 | Cup-Starter |
| ❸287 | 650926 | 3 | Screw (8-32 X 21/64) |
| ❸325 | 29443 | 1 | Clip-Wire |
| ❸330 | 611131A | 1 | Harness-Wire |
| ❸353A | 650477 | 5 | Screw (T-30, 1/4-20 X 3/4) |
| ❸370 | 36695 | 1 | Decal-Tecumseh Logo For Top Of Recoil Starter |
| ❸380 | 640086A | 1 | Carburetor (Includes 184) |

| Ref | Part No. | Qty. | Description |
|---|---|---|---|
| ❸383 | 570434 | 1 | Baffle-Carburetor |
| ❸384 | 650431 | 2 | Screw (T-25, 10-32 X 5/8) |
| ❸390 | 590745 | 1 | Starter-Rewind |
| ❸400 | 510324B | 1 | Gasket Set |
| ❸420 | 730227D | 1 | Oil-2 Cycle (8 Oz) |
| ❶❸ | 900392B | 1 | Engine-Replacement |

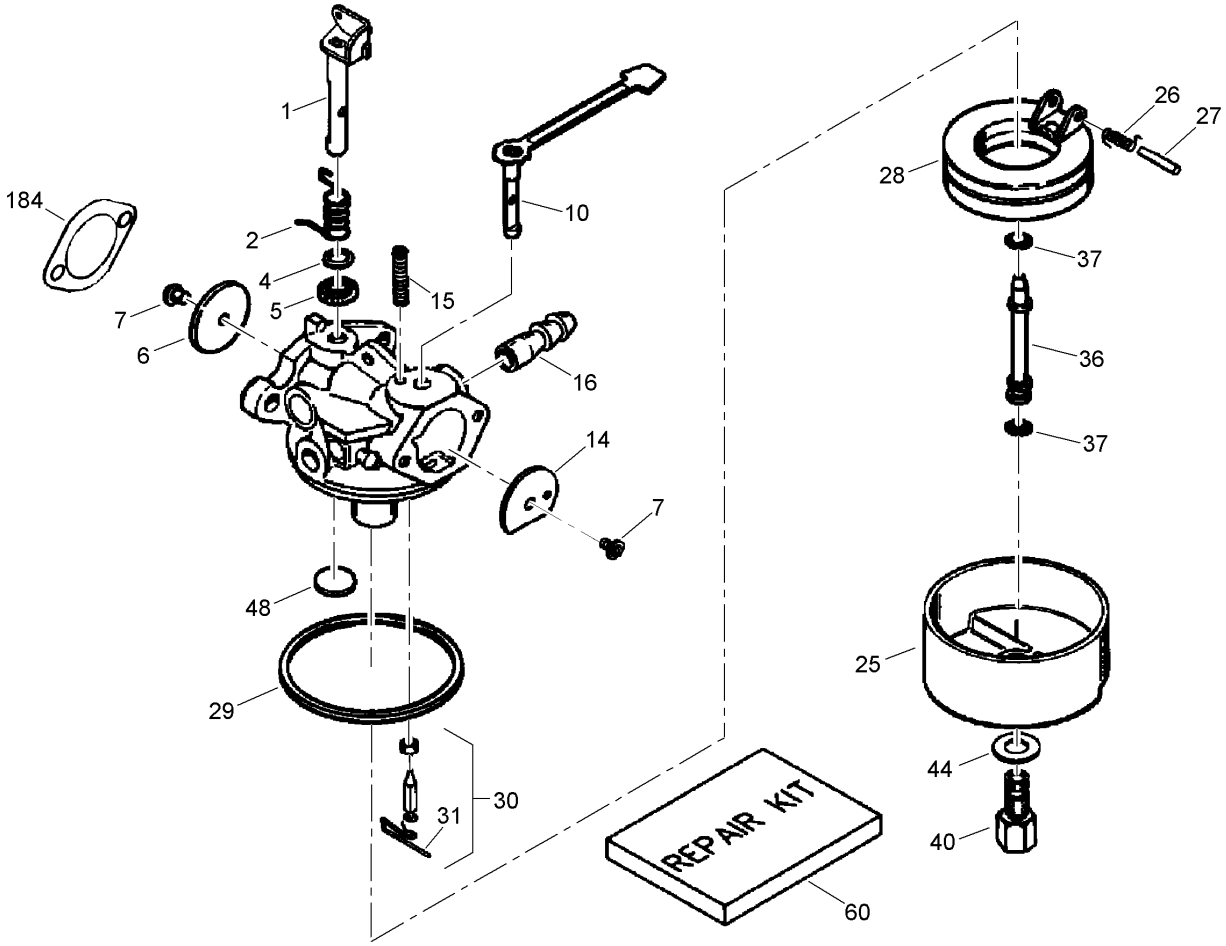


# Carburetor Assembly No. 640086A
# Tecumseh TH098SA-1723F

| Ref | Part No. | Qty. | Description |
|---|---|---|---|
| ❸ | 640086A | 1 | Carburetor |
| ❸1 | 632166A | 1 | Throttle Shaft And Lever ASM |
| ❸2 | 632169 | 1 | Spring-Trottle, Return |
| ❸❹4 | 631184 | 1 | Washer-Seal, Dust |
| ❸❹5 | 631183 | 1 | Seal-Dust (Throttle) |
| ❸6 | 631616 | 1 | Throttle-Shutter |
| ❸❹7 | 650506 | 2 | Screw-Shutter |
| ❸10 | 632553 | 1 | Choke Shaft And Lever ASM |
| ❸14 | 31837 | 1 | Shutter-Choke |
| ❸15 | 630735 | 1 | Spring-Positioning, Choke |
| ❸16 | 632164 | 1 | Fitting-Fuel |
| ❸25 | 631867 | 1 | Bowl-Float (No Drain) |
| ❸26 | 632386 | 1 | Spring-Float, Dampening |
| ❸❹27 | 631024 | 1 | Shaft-Float |
| ❸28 | 632019 | 1 | Float |
| ❸❹29 | 631028 | 1 | O Ring-Bowl, Float |
| ❸❹30 | 631021 | 1 | Inlet Needle, Seat And Clip ASM (Includes 31) |
| ❸31 | 631022 | 1 | Clip-Spring |
| ❸36 | 640080 | 1 | Tube-Nozzle, Main |
| ❸❹37 | 632547 | 2 | O-Ring (Main Nozzle Tube) |
| ❸40 | 640301 | 1 | Nut-Bowl, High Speed |
| ❸44 | 27110A | 1 | Washer-Nut, Bowl |
| ❸❹48 | 631027 | 1 | Plug-Welch, Atmospheric Vent |

| Ref | Part No. | Qty. | Description |
|---|---|---|---|
| ❸60 | 632760 | 1 | Repair Kit |
| ❸184 | 510326A | 2 | Gasket-Carburetor |

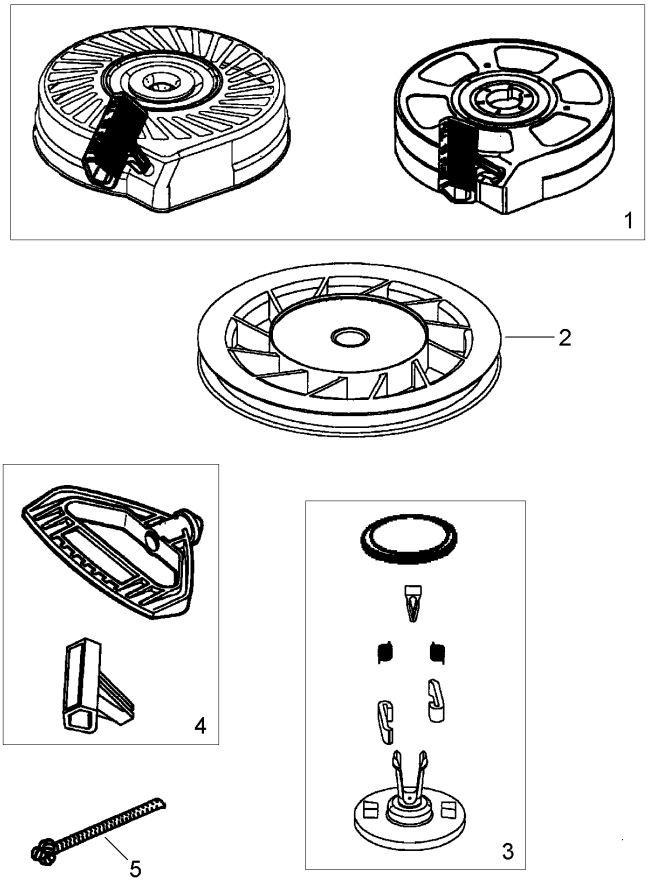


This illustration may not depict actual equipment and is for reference purposes only

# Rewind Starter No. 590745
# Tecumseh TH098SA-1723F

| Ref | Part No. | Qty. | Description |
|---|---|---|---|
| ❸1 | 590745 | 1 | Starter-Rewind |
| ❸2 | 590645A | 1 | Pulley And Rewind Spring ASM |
| ❸3 | 590772 | 1 | Repair Kit |
| ❸4 | 590701 | 1 | Handle-Starter (STD) |
| ❸5 | 590535 | 1 | Rope-Starter (98 Cut To Length) |


TORO®