Form Number 3358-429 Rev A

CCR™ Powerlite®
Snowthrower

Model No. 38182 - 280000001 and up.

Parts Catalog

Ordering Replacement Parts

To order replacement parts, please supply the part number, the quantity, and the description of each part desired.

Understanding Reference Numbers

Each Identified part in an illustration has a reference number. The reference number for a part also appears in the parts list, along with other information about the part.

This catalog uses two special reference number formats, one to indicate parts in a service assembly and another to indicate the quantity of a given part in an illustration.

Service Assembly Reference Numbers

Parts in service assemblies have reference numbers in the form a:b. The a represents the reference number of the entire service assembly and the b represents a sequential number unique to each part within the service assembly.

For example, a wheel assembly might be identified by reference number 6, the tire by 6:1, the valve by 6:2, and the wheel by 6:3. When you order the assembly identified by reference number 6, you receive all parts identified by reference numbers 6:1, 6:2, and 6:3. However, you may also order any part individually. Reference numbers of this type appear in illustrations and in part lists.

Reference Numbers Indicating Quantity

In an illustration, if a reference number indicates more than one part, the reference number has the form nX y. The n represents the quantity of the part, the X is the multiplication symbol, and the y represents the reference number.

For example, in an illustration, the reference number 2X 37 means that two of the parts identified by reference number 37 are indicated.

© The Toro Company - 2007
All Rights Reserved

Register your product at www.Toro.com

Contents

Description	Page
Rotor Drive Assembly	3
Chute and Upper Shroud Assembly	4
Rotor Assembly	5
Engine, Rotor Housing and Sideplate Assembly	6
120 Volt Starter Assembly No. 105-2953	7
Handle and Lower Shroud Assembly	8
Carburetor Assembly No. 640086A Tecumseh TH098SA-1723F	9
Engine Assembly Tecumseh TH098SA-1723F	10
Rewind Starter No. 590745 Tecumseh TH098SA-1723F	12

Part Description Abbreviations

Part descriptions in this catalog may include the following abbreviations.

AR. . . . . as required
ASM. . . . . assembly
BBC. . . . . blade brake clutch
CARR. . . . . carriage
DEG. . . . . degrees
EXT. . . . . external
FH. . . . . flat head
GA. . . . . gauge
HD. . . . . heavy-duty
HF. . . . . hex flange
HH. . . . . hex head
HHF. . . . . hex head flange
HHFTF. . . . . hex head flange thread forming
HJ. . . . . hex jam
HLH. . . . . hex lag head
HOC. . . . . height-of-cut
HSBH. . . . . hex socket button head
HSFH. . . . . hex socket flat head
HSH. . . . . hex socket head
HWH. . . . . hex washer head
HWHTF. . . . . hex washer head thread forming
HYD. . . . . hydraulic
LH. . . . . left hand
NI. . . . . nylon insert
NPTF. . . . . national pipe thread fine
PFH. . . . . phillips flat head
PPH. . . . . phillips pan head
PPHTF. . . . . phillips pan head thread forming
PRH. . . . . phillips round head
PTH. . . . . phillips truss head
PTO. . . . . power-take-off
RH. . . . . right hand
ROPS. . . . . roll-over protection system
SFH. . . . . slotted fillister head
SHH. . . . . slotted hex head
SHWH. . . . . slotted hex washer head
SPH. . . . . slotted pan head
SQH. . . . . square head
SRH. . . . . slotted round head
STD. . . . . standard
TAP. . . . . self tapping
TTH. . . . . torx truss head

Footnotes

❶ Not illustrated
❷ Not serviced separately
❸ Obtain from your local Tecumseh dealer
❹ Included in Repair Kit 632760

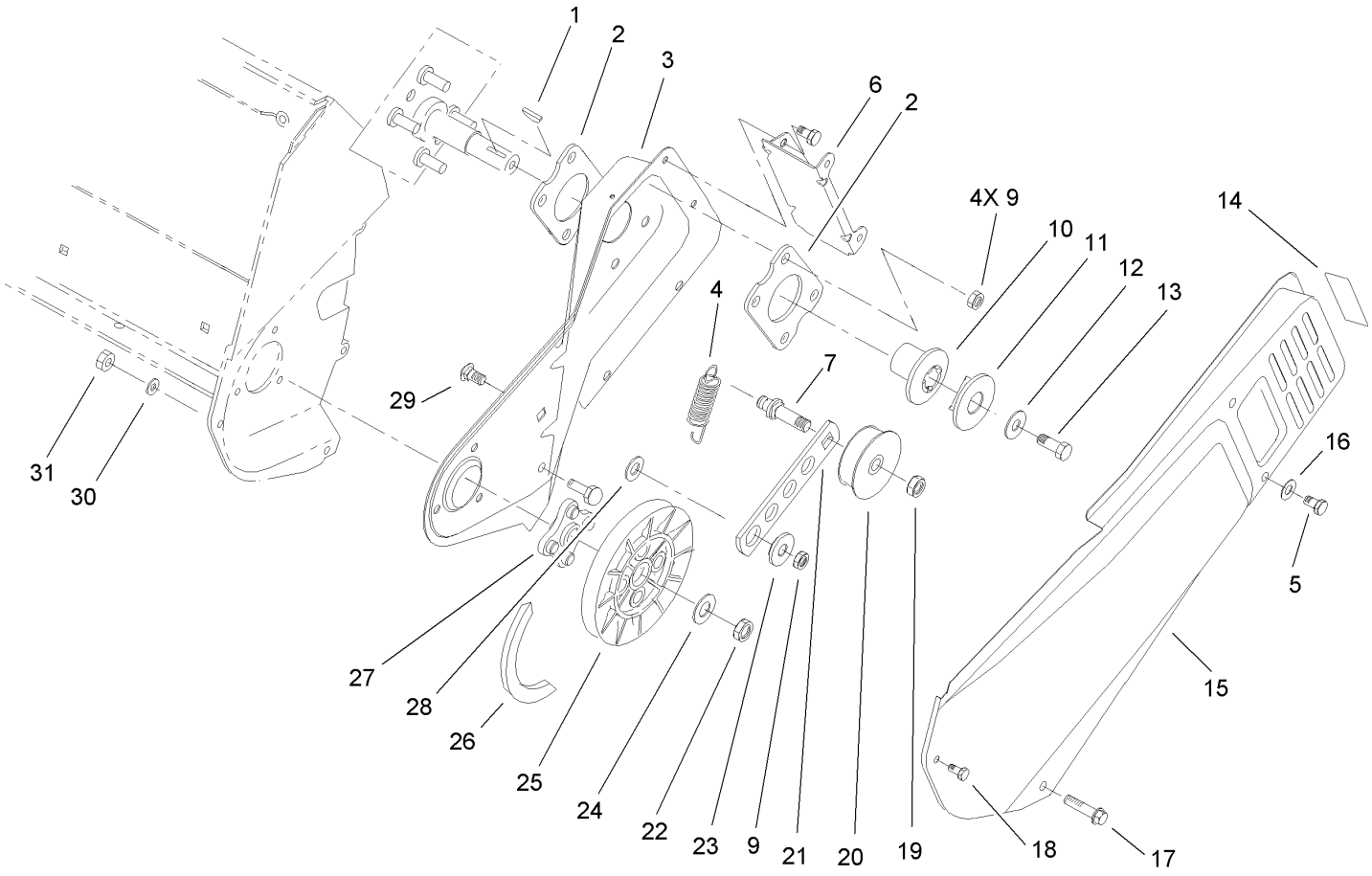

Rotor Drive Assembly

Ref	Part No.	Qty.	Description
1	3257-3	1	Key-Woodruff
2	71-5290-03	2	Plate-Engine
3	95-7945-03	1	Sideplate-LH
4	75-9020	1	Spring-Extension
5	32144-4	4	Screw-HWH
6	75-8870-03	1	Bracket-Cover, Belt
7	75-8720	1	Pin-Idler
9	3296-29	5	Nut-Lock, NI
10	71-5050	1	Hub-Half Sheave
11	71-5060	1	Cap-Half Sheave
12	3256-71	1	Washer-Flat
13	3235-6	1	Screw-HH
14	104-2767	1	Decal-Warning
15	75-8830-03	1	Cover-Belt
16	3256-1	2	Washer-Flat
17	46-8094	3	Screw-Plastite
18	32105-23	1	Screw
19	3296-59	1	Nut-Lock, NI
20	71-5260	1	Pulley-Idler
21	75-9050	1	Arm-Idler
22	3296-38	1	Nut-Lock, NI
23	75-8700	1	Bushing-Idler
24	3256-25	1	Washer-Flat
25	75-8750	1	Pulley-Driven

Ref	Part No.	Qty.	Description
26	75-9010	1	V-Belt
27	75-8740	1	Hub
28	25-5640	1	Washer
29	3230-23	1	Screw-CARR
30	3256-14	1	Washer-Flat
31	3296-2	1	Nut-Lock

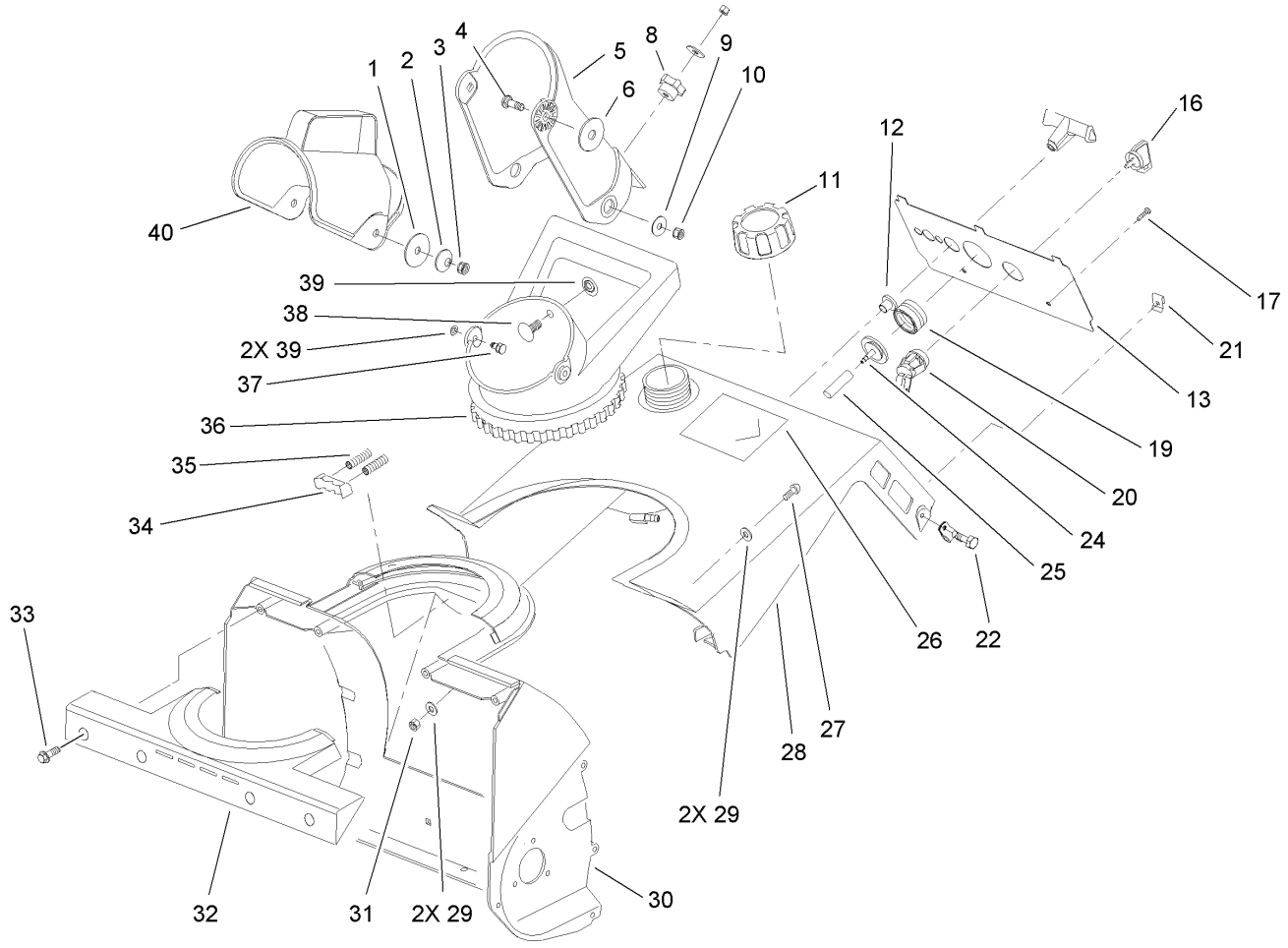

Chute and Upper Shroud Assembly

Ref	Part No.	Qty.	Description
1	3256-68	2	Washer-Flat
2	3290-340	2	Washer-Belleville
3	3296-29	2	Nut-Lock, NI
4	3230-2	2	Bolt-CARR
5	112-6649	1	Chute-French/English
6	95-1905	2	Washer-Rubber
8	233-67	1	Knob-Chute
9	3256-81	2	Washer-Flat
10	3296-56	2	Nut-Lock, NI
11	104-4133	1	Gas Cap ASM
12	23-7470	1	Guide-Rope, Starter
13	112-8101	1	Panel-Control
16	63-8360	1	Key-Ignition
17	32144-53	2	Screw-SHWH
19	66-7460	1	Bulb-Primer
20	40-5940	1	Switch
21	49-1490	2	Nut
22	32144-89	2	Screw-Forming, Thread
24	44-2750	1	Body-Primer
25	44-3173	1	Hose-Primer
26	108-5082	1	Decal-Shroud
27	3250-32	2	Screw-PPH
28	105-2994	1	Shroud-Tank, Gas Upper
29	3256-1	4	Washer-Flat

Ref	Part No.	Qty.	Description
30	75-8660	1	Housing
31	3296-42	2	Nut-Lock, NI
32	75-8650	1	Retainer-Chute
33	46-8094	4	Screw-Plastite
34	75-9160	1	Detent-Chute
35	75-9170	2	Spring-Compression
36	75-8670	1	Handle-Chute
37	321-3	2	Screw-HH
38	3229-11	1	Screw-CARR
39	32115-15	3	Pushnut-Retainer, Bolt
40	75-8770	1	Deflector-Chute

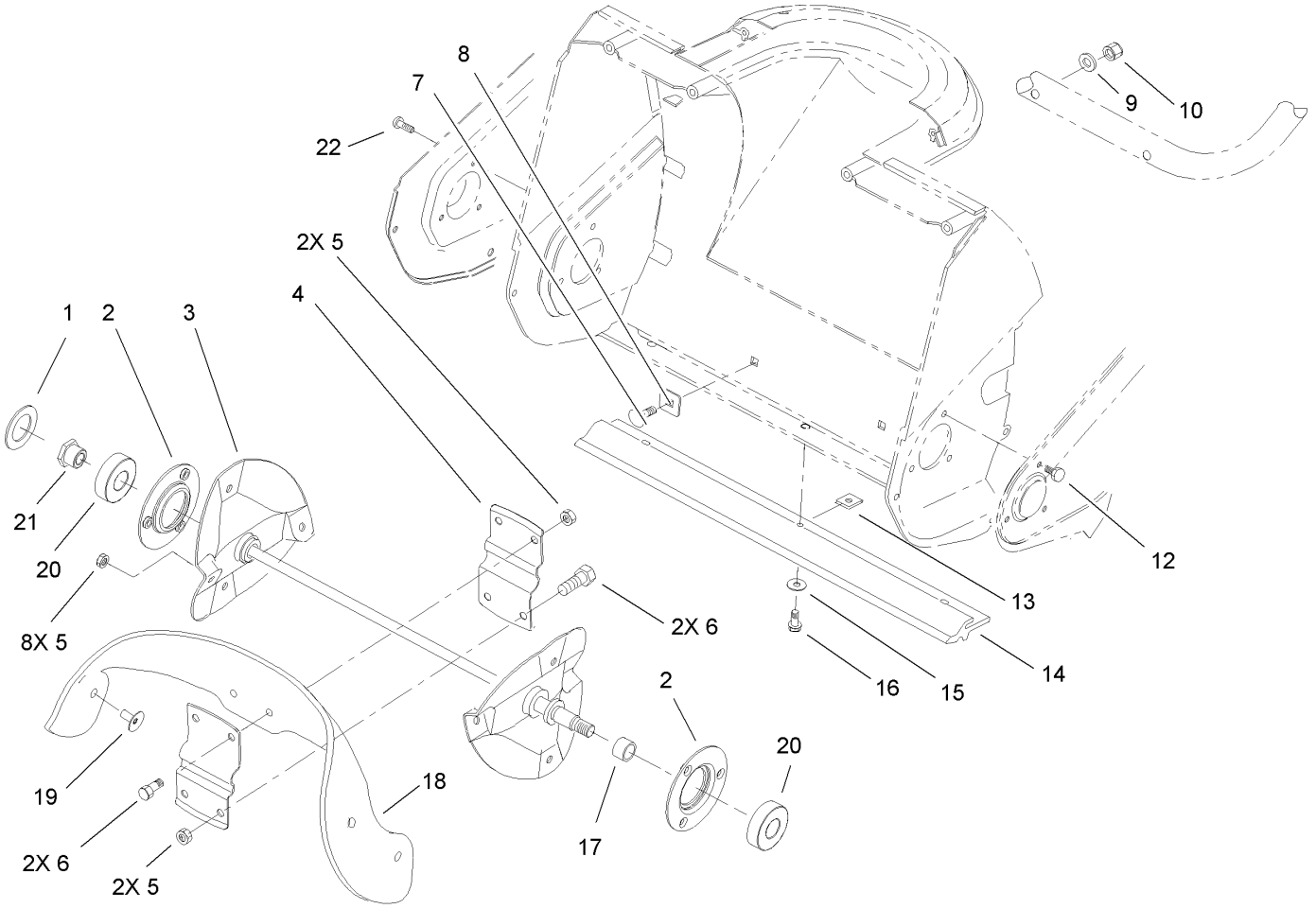

Rotor Assembly

Ref	Part No.	Qty.	Description
1	75-9180	1	Washer-Rubber
2	112-8105	2	Flange-Bearing
3	75-8840-03	1	Rotor Shaft ASM
4	75-8880-03	2	Support-Rotor
5	3296-56	12	Nut-Lock, NI
6	3234-33	4	Screw-HHF
7	3229-5	2	Screw-CARR
8	75-9040	2	Washer-Square
9	3-7501	2	Washer
10	3296-42	2	Nut-Lock, NI
12	112-8124	3	Screw-HH, Taptite
13	32115-19	3	Nut-Speed, U Type
14	75-8780	1	Scraper
15	3256-14	3	Washer-Flat
16	32144-34	3	Screw-Forming, Thread
17	75-8710	1	Spacer
18	84-1980	2	Blade-Rotor
19	84-1970	8	Screw
20	100-1048	2	Bearing-Ball
21	75-8690	1	Nut
22	32144-85	3	Screw-HWH

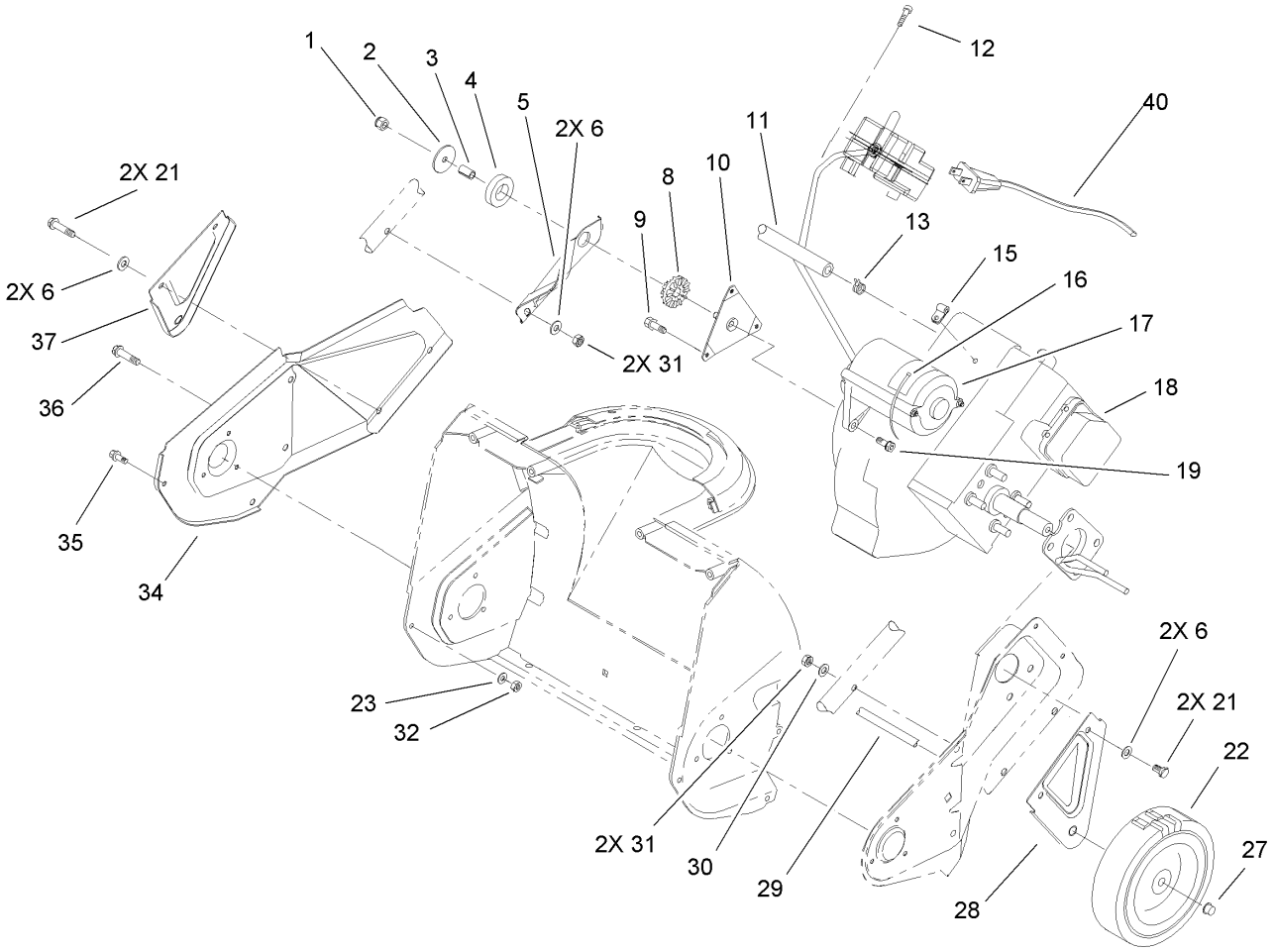

Engine, Rotor Housing and Sideplate Assembly

Ref	Part No.	Qty.	Description
1	3296-56	1	Nut-Lock, NI
2	3256-58	1	Washer-Flat
3	80-0650	1	Spacer-Tubular
4	95-1903	1	Ring-Isolator
5	75-8980-03	1	Bracket-Support, Engine
6	3256-1	6	Washer-Flat
8	75-9100	1	Bushing-Isolator
9	94-2789	3	Screw
10	92-6012	1	Bracket And Stud ASM
11	110-3447	1	Hose-Fuel
12	32144-27	2	Screw-Plastite
13	2412-98	2	Clamp
15	2412-91	1	Clamp
16	250-7	1	Tie-Cable
17	105-2953	1	120 Volt Starter ASM
❷❸18		1	Engine-Tecumseh, Th098Sa-1723F
19	80-0700	2	Screw
21	321-10	4	Screw-HH
22	23-3250	2	Wheel
23	3256-14	1	Washer-Flat
27	3290-320	2	Retainer-Push On
28	75-8910-03	1	Bracket-Wheel, LH
29	27-0062	1	Axle

Ref	Part No.	Qty.	Description
30	3-7501	2	Washer
31	3296-42	4	Nut-Lock, NI
32	3296-2	1	Nut-Lock
34	75-8820-03	1	Plate-Side, RH
35	32105-23	1	Screw
36	46-8094	3	Screw-Plastite
37	75-8900-03	1	Bracket-Wheel, RH
40	106-4741	1	Cord-Electric

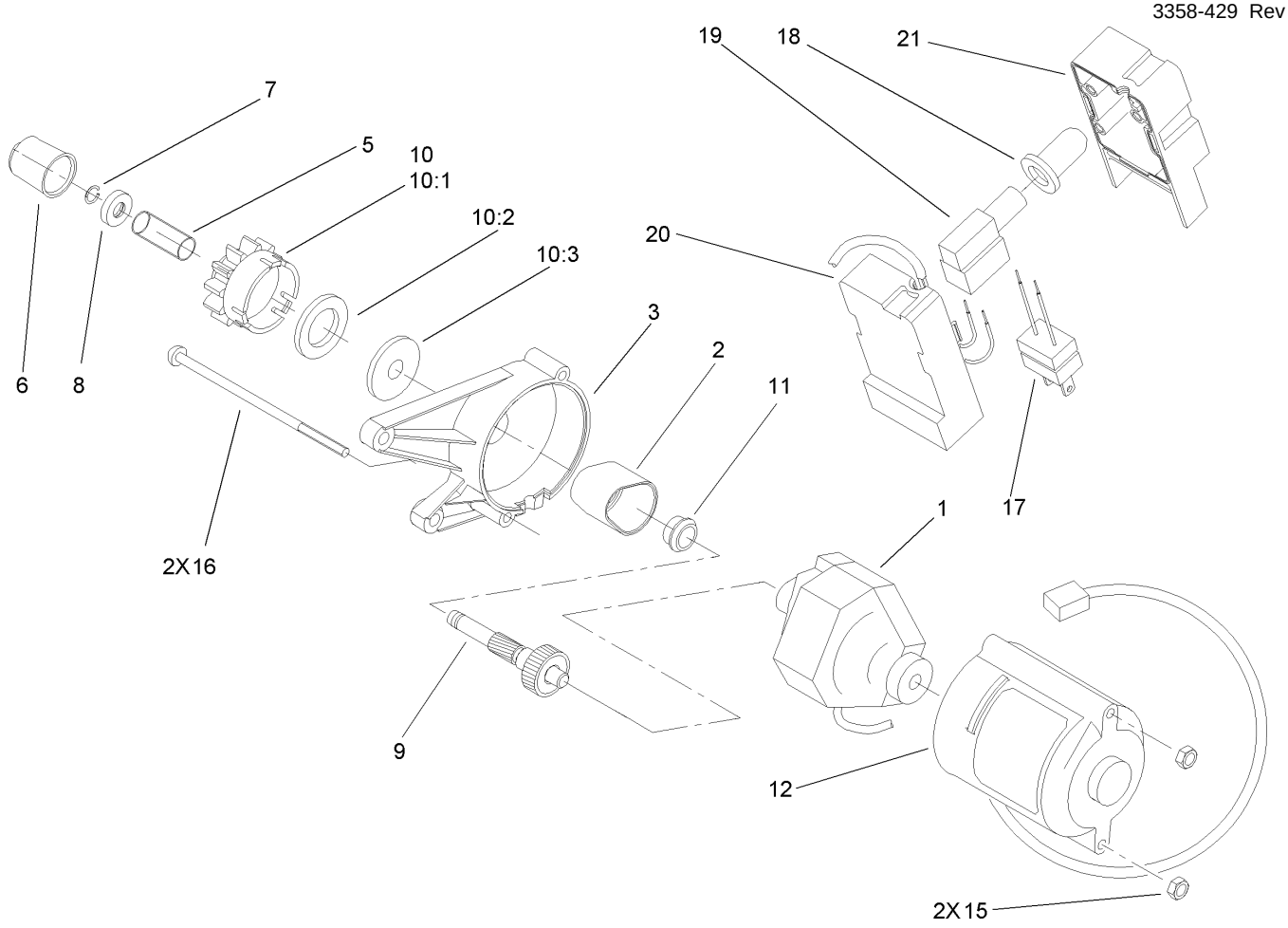

120 Volt Starter Assembly No. 105-2953

Ref	Part No.	Qty.	Description
1	70-7802	1	Starter Motor ASM
2	70-7850	1	Cover-Gear
3	100-3443	1	Housing-Upper, Starter
5	61-4690	1	Spring
6	70-7890	1	Cap-Pinion
7	61-4680	1	Ring-Lock
8	100-2902	1	Stop-Pinion
9	105-8831	1	Shaft And Gear ASM
10	84-5240	1	Pinion ASM
10:1	70-7790	1	Nut
10:2	84-5230	1	Pinion
10:3	84-5440	1	Ring-Rubber
11	70-7900	1	Bushing
12	100-3444	1	Housing-Lower, Starter
15	3296-2	2	Nut-Lock
16	32144-101	2	Screw
17	94-9933	1	Plug-Power
18	61-4810	1	Boot-Switch
19	61-4820	1	Switch-Starter
20	100-3441	1	Switch-Base, Housing
21	100-3442	1	Housing-Cap, Switch

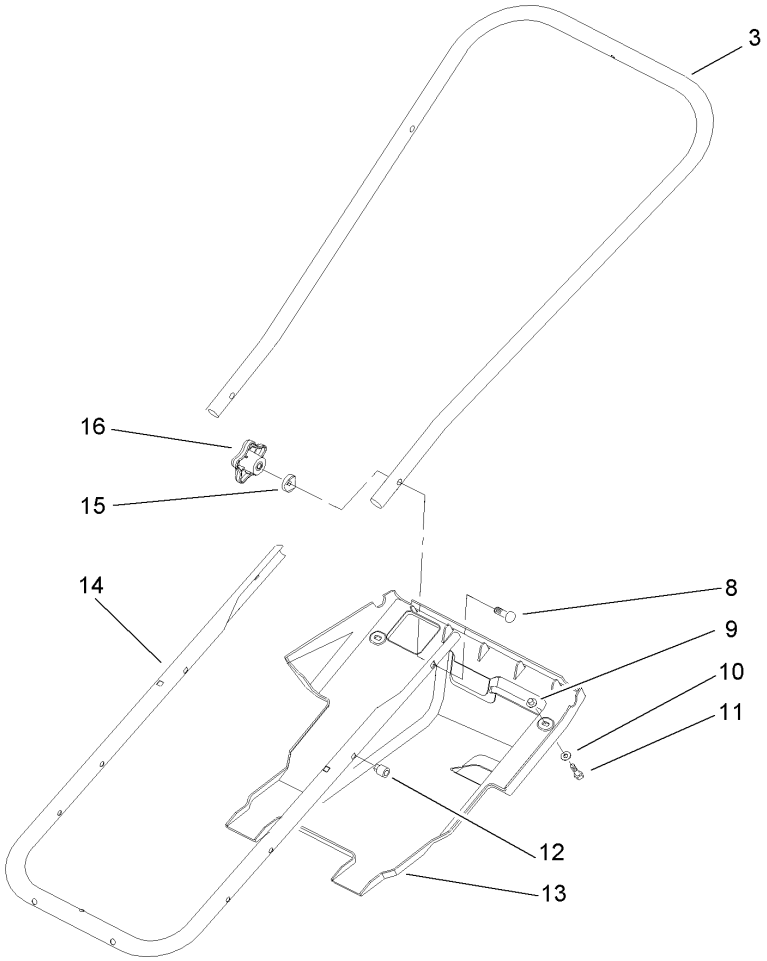

Handle and Lower Shroud Assembly

Ref	Part No.	Qty.	Description
3	75-9070-03	1	Handle-Upper
8	92-2260	2	Screw-Handle
9	605120	2	Nut-Clip
10	3256-14	2	Washer-Flat
11	32144-34	2	Screw-Forming, Thread
12	32115-17	2	Nut-Expansion
13	75-8790	1	Shroud
14	75-9060-03	1	Tube-Frame
15	107-3844	2	Washer
16	106-4161	2	Knob-Handle

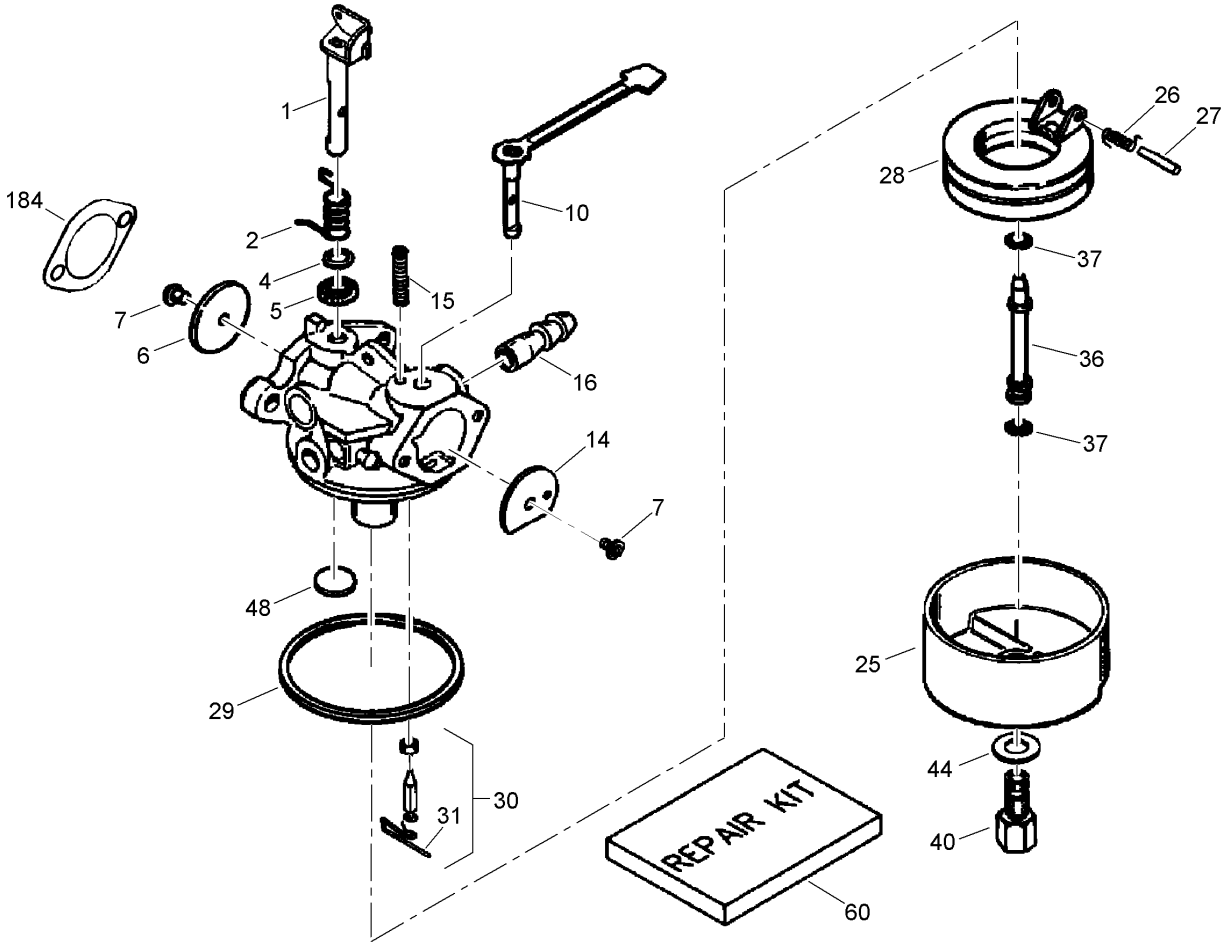

Carburetor Assembly No. 640086A
Tecumseh TH098SA-1723F

Ref	Part No.	Qty.	Description
❸	640086A	1	Carburetor
❸1	632166A	1	Throttle Shaft And Lever ASM
❸2	632169	1	Spring-Trottle, Return
❸❹4	631184	1	Washer-Seal, Dust
❸❹5	631183	1	Seal-Dust (Throttle)
❸6	631616	1	Throttle-Shutter
❸❹7	650506	2	Screw-Shutter
❸10	632553	1	Choke Shaft And Lever ASM
❸14	31837	1	Shutter-Choke
❸15	630735	1	Spring-Positioning, Choke
❸16	632164	1	Fitting-Fuel
❸25	631867	1	Bowl-Float (No Drain)
❸26	632386	1	Spring-Float, Dampening
❸❹27	631024	1	Shaft-Float
❸28	632019	1	Float
❸❹29	631028	1	O Ring-Bowl, Float
❸❹30	631021	1	Inlet Needle, Seat And Clip ASM (Includes 31)
❸31	631022	1	Clip-Spring
❸36	640080	1	Tube-Nozzle, Main
❸❹37	632547	2	O-Ring (Main Nozzle Tube)
❸40	640301	1	Nut-Bowl, High Speed
❸44	27110A	1	Washer-Nut, Bowl
❸❹48	631027	1	Plug-Welch, Atmospheric Vent

Ref	Part No.	Qty.	Description
❸60	632760	1	Repair Kit
❸184	510326A	2	Gasket-Carburetor

Engine Assembly
Tecumseh TH098SA-1723F

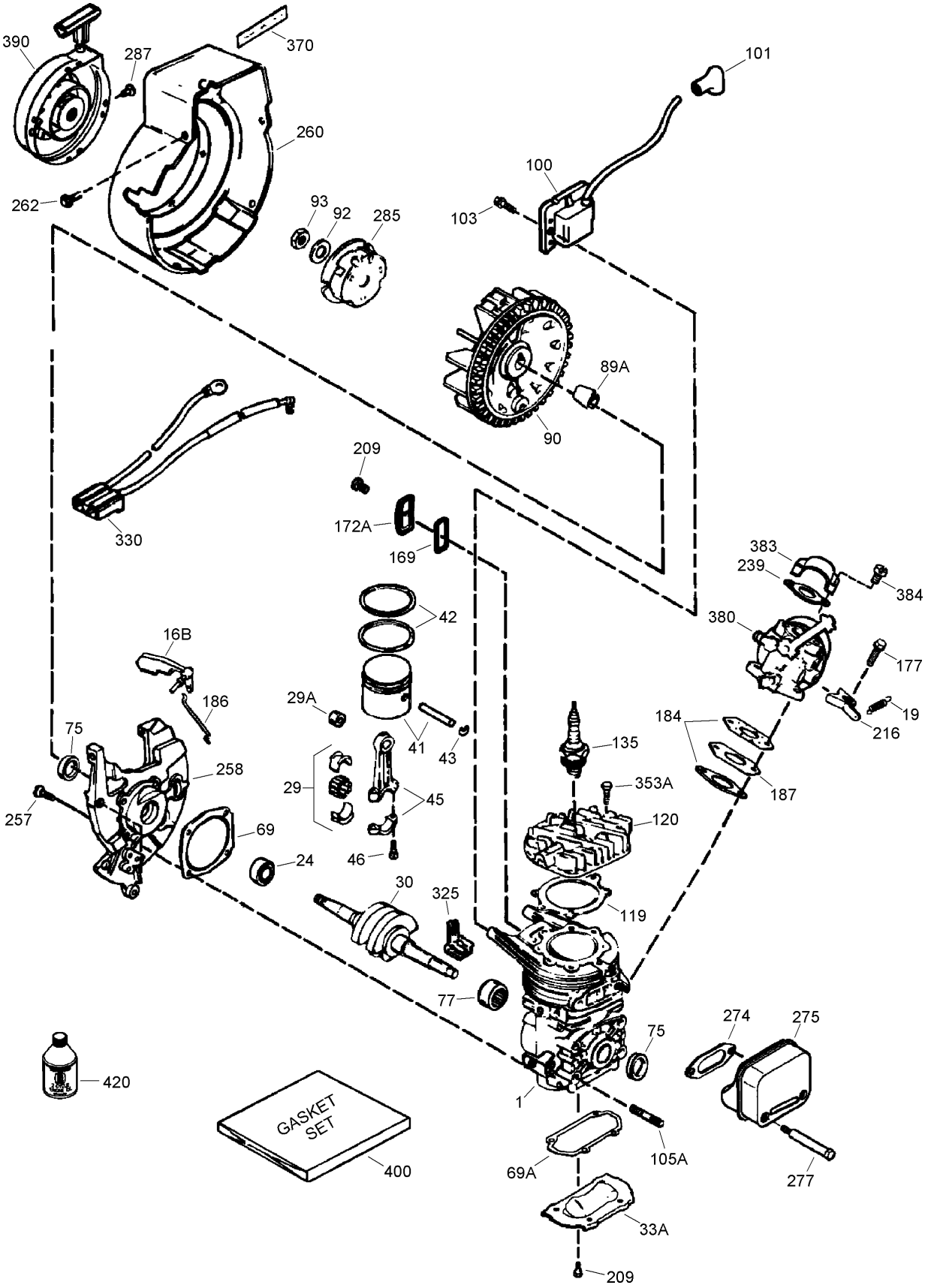

Engine Assembly
Tecumseh TH098SA-1723F

Ref	Part No.	Qty.	Description
❸1	710515A	1	Short Block-Replacement
❸16B	490291A	1	Vane-Air
❸19	570707	1	Spring-Extention (Governor)
❸24	530110	1	Bearing-Ball
❸29	530150A	1	Needle Bearing And Liner Set (37 Needle)
❸29A	530104A	1	Bearing-Cartridge
❸30	290602	1	Crankshaft
❸33A	570644	1	Plate-Cover
❸41	310294A	1	Piston And Pin ASM
❸42	310289A	1	Ring Set
❸43	310167	1	Ring-Retaning (Piston Pin)
❸45	310235C	1	Connecting Rod ASM (Includes 29)
❸46	650633	2	Bolt-Rod, Connecting
❸69	510292A	1	Gasket-Cover, Cylinder
❸75	510319	2	Seal-Oil
❸77	530105	1	Bearing-Cartridge
❸89A	611032	1	Sleeve-Adapter
❸90	611066	1	Flywheel
❸92	650815	1	Washer-Belleville
❸93	650390	1	Nut-Flywheel
❸100	34443C	1	Ignition-State, Solid
❸101	610118	1	Cover-Spark Plug
❸103	651007	2	Screw (T-15, 10-24 X 15/16)
❸105A	650796	4	Stud
❸119	510274A	1	Gasket-Head, Cylinder
❸120	250240B	1	Head-Cylinder
❸135	611049	1	Spark Plug-Resistor (R C J 8Y)
❸169	510323A	1	Gasket-Plate, Cover
❸172A	570708	1	Cover-Release, Compression
❸177	650959	2	Screw (5/32 Allen, 1/4-20 X 1)
❸184	510326A	2	Gasket-Carburetor
❸186	490322	1	Governor-Link
❸187	570438A	1	Spacer
❸209	650579	4	Screw (T-25, 10-24 X 1/2)
❸216	570645	1	Lever-Adjusting, Rpm
❸239	35815	1	Gasket-Cleaner, Air
❸257	650911	4	Screw (T-30, 1/4-20 X 5/8)
❸258	350422	1	Base-Housing, Blower
❸260	350437	1	Housing-Blower
❸262	650737	4	Screw (1/4-20 X 1/2)
❸274	510207A	1	Gasket-Exhaust
❸275	390332	1	Muffler (Includes 274, 277)
❸277	650869	2	Screw (1/4-20 X 2-3/4)
❸285	590551A	1	Cup-Starter
❸287	650926	3	Screw (8-32 X 21/64)
❸325	29443	1	Clip-Wire
❸330	611131A	1	Harness-Wire
❸353A	650477	5	Screw (T-30, 1/4-20 X 3/4)
❸370	36695	1	Decal-Tecumseh Logo For Top Of Recoil Starter
❸380	640086A	1	Carburetor (Includes 184)

Ref	Part No.	Qty.	Description
❸383	570434	1	Baffle-Carburetor
❸384	650431	2	Screw (T-25, 10-32 X 5/8)
❸390	590745	1	Starter-Rewind
❸400	510324B	1	Gasket Set
❸420	730227D	1	Oil-2 Cycle (8 Oz)
❶❸	900392B	1	Engine-Replacement

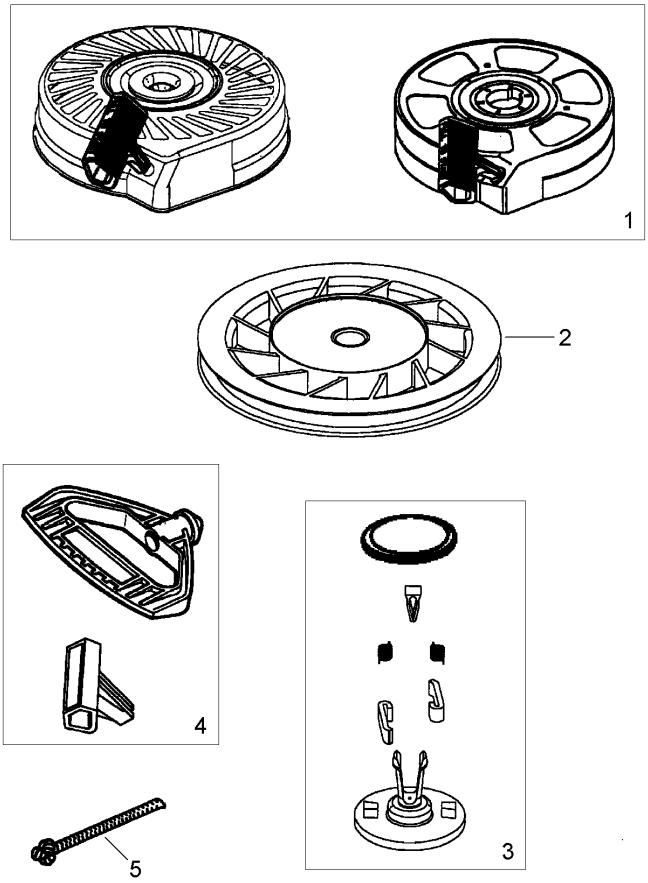

This illustration may not depict actual equipment and is for reference purposes only

Rewind Starter No. 590745
Tecumseh TH098SA-1723F

Ref	Part No.	Qty.	Description
❸1	590745	1	Starter-Rewind
❸2	590645A	1	Pulley And Rewind Spring ASM
❸3	590772	1	Repair Kit
❸4	590701	1	Handle-Starter (STD)
❸5	590535	1	Rope-Starter (98 Cut To Length)

NOTES

NOTES

NOTES


TORO®