Form Number 3353-918 Rev C

Reelmaster® 5400-D
4-Wheel Drive

Model No. 03544 - 250000301 and up.

Parts Catalog

Ordering Replacement Parts
To order replacement parts, please supply the part number, the quantity, and the description of each part desired.

Understanding Reference Numbers
Each Identified part in an illustration has a reference number. The reference number for a part also appears in the parts list, along with other information about the part.

This catalog uses two special reference number formats, one to indicate parts in a service assembly and another to indicate the quantity of a given part in an illustration.

Service Assembly Reference Numbers
Parts in service assemblies have reference numbers in the form a:b. The a represents the reference number of the entire service assembly and the b represents a sequential number unique to each part within the service assembly.

For example, a wheel assembly might be identified by reference number 6, the tire by 6:1, the valve by 6:2, and the wheel by 6:3. When you order the assembly identified by reference number 6, you receive all parts identified by reference numbers 6:1, 6:2, and 6:3. However, you may also order any part individually. Reference numbers of this type appear in illustrations and in part lists.

Reference Numbers Indicating Quantity
In an illustration, if a reference number indicates more than one part, the reference number has the form nX y. The n represents the quantity of the part, the X is the multiplication symbol, and the y represents the reference number.

For example, in an illustration, the reference number 2X 37 means that two of the parts identified by reference number 37 are indicated.

Register your product at www.Toro.com

© The Toro Company - 2007
All Rights Reserved

Contents

Description	Page
Frame and Body Assembly	4
Frame Assembly No. 107-1840	5
Steering Tower Assembly	6
Power Steering Unit No. 75-0600	7
Traction and Brake Pedal Assembly	8
Seat Frame and Throttle Assembly	9
Seat and Suspension Assembly	10
Seat Suspension Assembly No. 76-1970	11
Suspension Assembly No. 106-8085	12
Control Console Assembly	13
Hydraulic Filter and Reservoir Assembly	15
Fuel Tank Assembly	17
Front Axle Assembly	18
Drive Axle Assembly No. 108-0640-03	19
Brake Assembly	21
Transmission Assembly	22
Transmission Assembly No. 75-0012	23
Traction Control Assembly	25
Gear Pump Installation Assembly	26
Gear Pump Assembly No. 107-2380	27
Engine Installation Assembly	28
Muffler and Pump Drive Assembly	29
Driveshaft Assembly No. 106-7751	30
Engine Component Assembly	31
Air Cleaner Assembly No. 98-4517	32
Water / Fuel Filter Assembly No. 98-9305	33
Fan Drive Assembly	34
Radiator Assembly	35
Oil Cooler and Radiator Assembly	36
Hood Assembly	37
Hydraulic Control Block and Hose Assembly	38
Hydraulic Manifold Assembly No. 110-0004	39
Front Hydraulic Manifold Assembly	40
Rear Hydraulic Manifold Assembly	41
Reel Motor Assembly	42
Hydraulic Motor Assembly No. 100-6426	43
Front Lift Circuit Assembly	44
Hydraulic Cylinder Assembly No. 93-9310	45
Hydraulic Cylinder Assembly No. 99-6986	46
Front Lift Arm Assembly	47
Rear Lift Circuit Assembly	48
Hydraulic Cylinder Assembly No. 93-9311	49
Rear Lift Arm Assembly	50
Rear Axle Support Assembly	51
Four Wheel Drive Rear Axle Assembly	52

Description	Page
Bevel Pinion Shaft Assembly Rear Axle Assembly No. 110-4800	53
Differential Assembly Rear Axle Assembly No. 110-4800	54
Axle Support Assembly Rear Axle Assembly No. 110-4800	55
Bevel Gear Case Assembly Rear Axle Assembly No. 110-4800	56
Bevel Gear Shaft Assembly Rear Axle Assembly No. 110-4800	57
Axle Case Assembly Rear Axle Assembly No. 110-4800	58
Axle Assembly Rear Axle Assembly No. 110-4800	59
Hydraulic Cylinder Assembly No. 98-8163	60
4 Wheel Drive Shaft Assembly	61
Roll-Over-Protection-System Assembly	62
Crankcase Assembly	63
Oil Pan Assembly	64
Cylinder Head Assembly	65
Gear Case Assembly	66
Head Cover Assembly	67
Dipstick and Guide Assembly	68
Main Bearing Assembly	69
Camshaft and Idle Gear Shaft Assembly	70
Piston and Crankshaft Assembly	71
Flywheel Assembly	72
Fuel Camshaft and Governor Shaft Assembly	73
Idle Apparatus Assembly	74
Injection Pump Assembly	75
Governor Assembly	76
Speed Control Plate Assembly	77
Nozzle Holder and Glow Plug Assembly	78
Nozzle Holder (Component Part) Assembly	79
Alternator and Pulley Assembly	80
Alternator (Component Part) Assembly	81
Start Assembly	82
Starter (Component Parts) Assembly	83
Water Flange and Thermostat Assembly	84
Water Pump and Water Pipe Assembly	85
Valve and Rocker Arm Assembly	86
Inlet and Exhaust Manifold Assembly	87
Turbo Charger Assembly	88
Oil Pipe (Turbo Charger) and Oil Cooler Assembly	89
Gasket Kits	90
Attachments and Accessories List	91

Part Description Abbreviations

Part descriptions in this catalog may include the following abbreviations.

AR. . . . . as required
ASM. . . . . assembly
BBC. . . . . blade brake clutch
CARR. . . . . carriage
DEG. . . . . degrees
EXT. . . . . external
FH. . . . . flat head
GA. . . . . gauge
HD. . . . . heavy-duty
HF. . . . . hex flange
HH. . . . . hex head
HHF. . . . . hex head flange
HHFTF. . . . . hex head flange thread forming
HJ. . . . . hex jam
HLH. . . . . hex lag head
HOC. . . . . height-of-cut
HSBH. . . . . hex socket button head
HSFH. . . . . hex socket flat head
HSH. . . . . hex socket head
HWH. . . . . hex washer head
HWHTF. . . . . hex washer head thread forming
HYD. . . . . hydraulic
LH. . . . . left hand
NI. . . . . nylon insert
NPTF. . . . . national pipe thread fine
PFH. . . . . phillips flat head
PPH. . . . . phillips pan head
PPHTF. . . . . phillips pan head thread forming
PRH. . . . . phillips round head
PTH. . . . . phillips truss head
PTO. . . . . power-take-off
RH. . . . . right hand
ROPS. . . . . roll-over protection system
SFH. . . . . slotted fillister head
SHH. . . . . slotted hex head
SHWH. . . . . slotted hex washer head
SPH. . . . . slotted pan head
SQH. . . . . square head
SRH. . . . . slotted round head
STD. . . . . standard
TAP. . . . . self tapping
TTH. . . . . torx truss head

Footnotes

❶ Not illustrated

❷ Not serviced separately

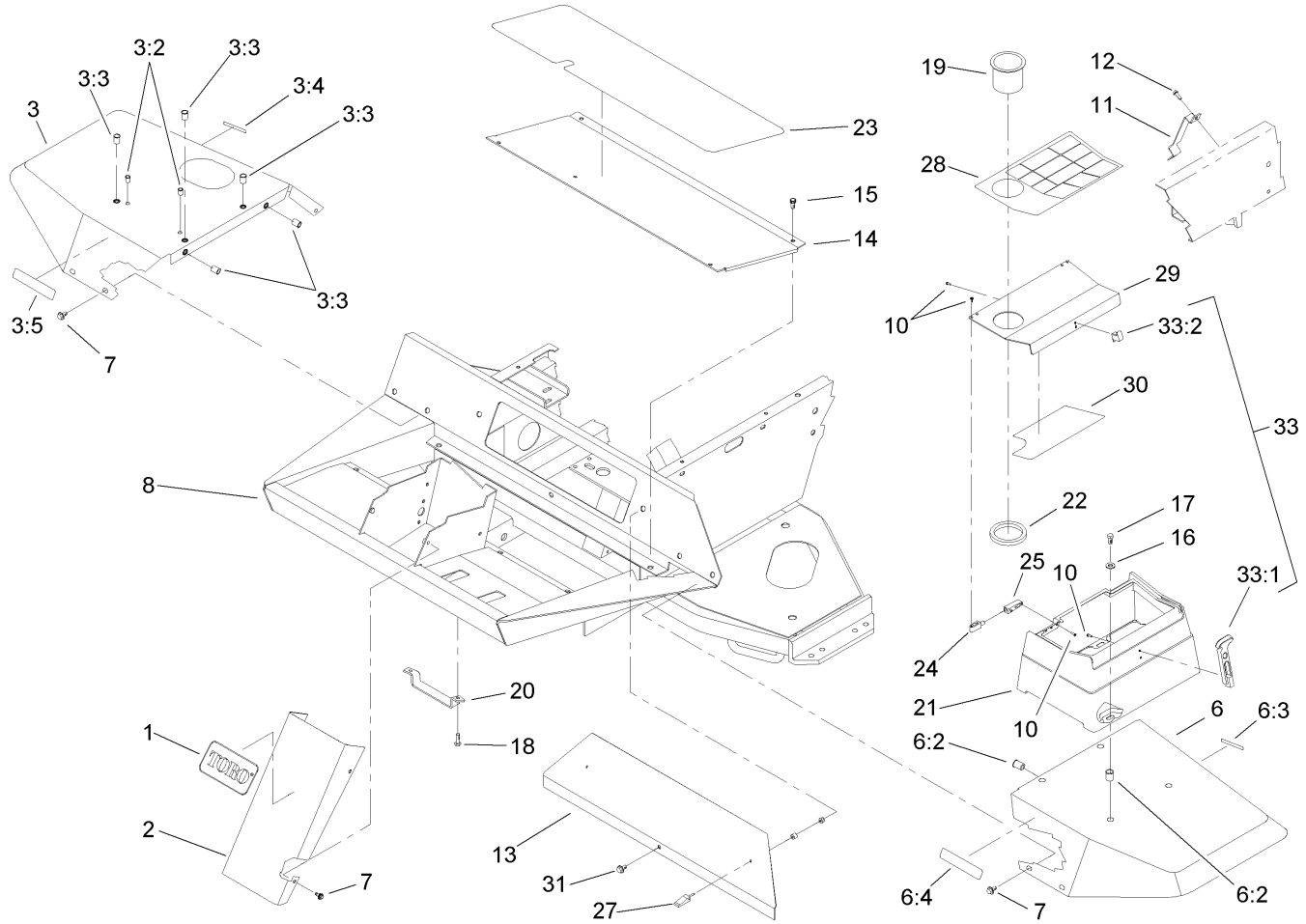

Frame and Body Assembly

Ref	Part No.	Qty.	Description
1	62-5550	1	Decal
2	93-7996-01	1	Cover-Tower
3	106-5950	1	RH Fender ASM
3:2	32148-6	2	Insert-Nut
3:3	32148-7	5	Nut-Insert
3:4	93-6686	1	Decal-Oil, HYD
3:5	93-6689	1	Decal-No Riders
6	106-5951	1	LH Fender ASM
6:2	32148-7	6	Nut-Insert
6:3	93-6680	1	Decal-Diesel
6:4	93-6689	1	Decal-No Riders
7	3234-14	14	Screw-HHF
8	107-1840	1	Frame ASM
10	32144-1	11	Screw-Taptite
11	98-4572	1	Bracket-Clamp, Hose
12	32144-14	2	Screw-HWHTF
13	75-1390-01	1	Cover-Access, Front
14	75-1410-01	1	Plate-Access, Floor
15	75-6840	4	Knob-Knurled
❶15	3234-7	1	Screw-HHF
16	3256-3	4	Washer-Flat
17	322-5	4	Screw-HH
18	322-4	2	Screw-HH
19	94-1410	1	Holder-Can, Beverage

Ref	Part No.	Qty.	Description
20	93-3626	1	Bracket-Hose
21	104-0026	1	Toolbox
22	104-1476	1	Ring-Rubber
23	75-0630	1	Tread-Foot, Center
24	104-1496	2	Hinge-Pin
25	104-1497	2	Hinge-Receiver
27	74-5950	2	Latch-Swell
28	104-9294	1	Decal-Warning
28	104-9295	1	Decal-Warning, Ce
29	104-1489-03	1	Cover-Toolbox
30	107-8841	1	Decal-Service
31	3234-5	1	Screw-HHF
33	94-5626	1	Latch-Draw, Flexible
33:1	100-5806	1	Handle-Latch
33:2	100-5807	1	Keeper-Latch

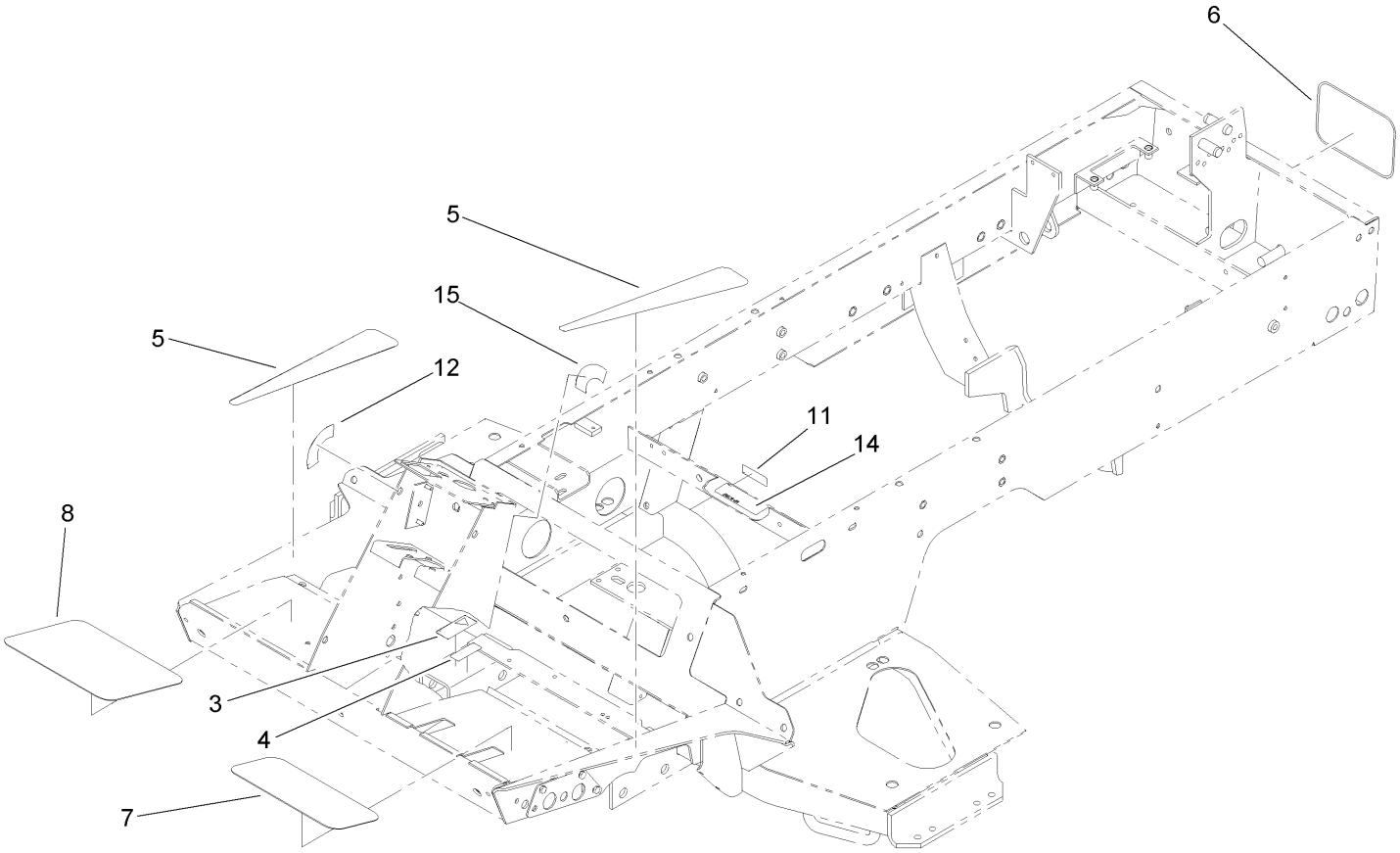

Frame Assembly No. 107-1840

Ref	Part No.	Qty.	Description
3	93-6693	1	Decal-Plate, Floor
4	93-6686	1	Decal-Oil, HYD
5	93-7592	2	Tread-Rest, Foot
6	62-7400	1	Decal
7	75-0620	1	Tread-Foot, LH
8	75-0610	1	Tread-Foot, RH
11	93-6691	1	Decal-Bolt, Eccentric
12	93-6699	1	Decal-Fast / Slow
14	104-2052	1	Decal-Ansi
15	105-7506	1	Decal-Switch, Key

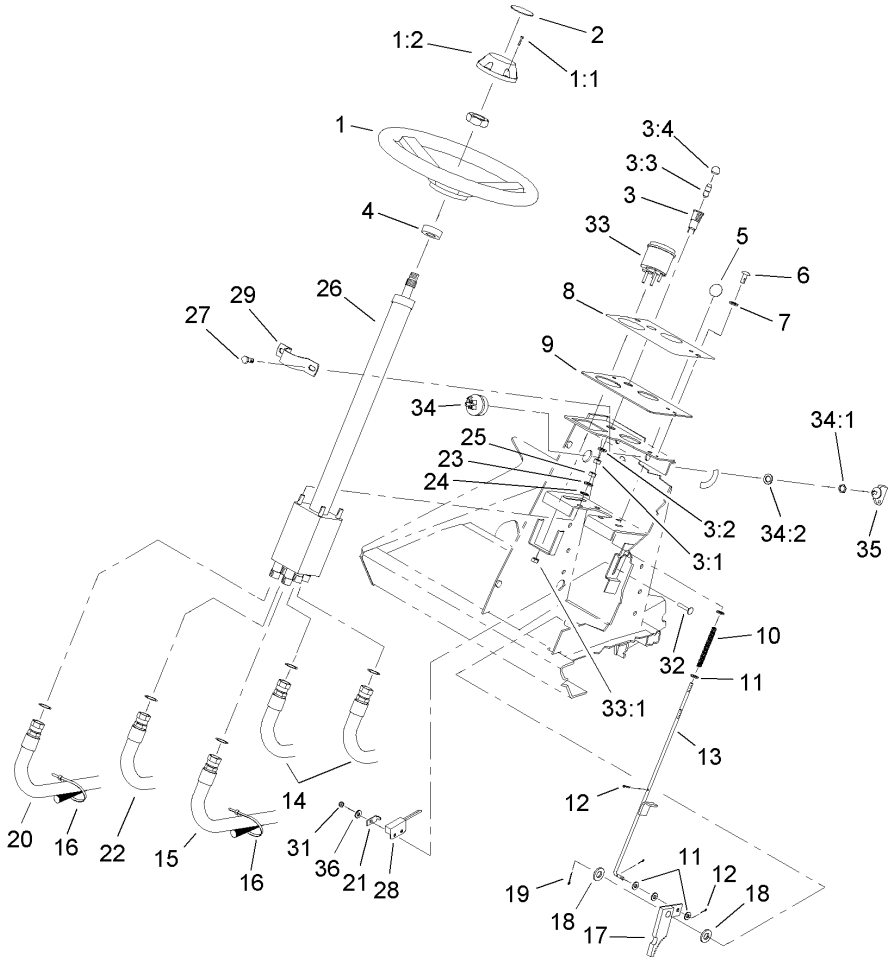

Steering Tower Assembly

Ref	Part No.	Qty.	Description
1	75-0560	1	Wheel-Steering
1:1	32144-21	1	Screw
1:2	68-5140	1	Cap-Wheel, Steering
2	68-5370	1	Decal
3	44-2210	1	Light-Indicator, Red
3:1	218-535	1	Nut-Hex
3:2	218-536	1	Washer-Lock
3:3	218-533	1	Lens
❷3:4		1	Bulb
4	21-9260	1	Cover-Dust
5	233-17	1	Knob
6	87-6620	2	Screw
7	3256-1	2	Washer-Flat
8	93-1263	1	Decal-Tower
9	93-7998-03	1	Plate-Instrument
10	95-1821-03	1	Spring-Compression
11	3256-22	5	Washer-Flat
12	3272-5	3	Pin-Cotter
13	104-1492	1	Rod ASM
14	75-6230	2	Hose
15	75-6240	1	Hose
16	3290-378	4	Tie-Cable
17	63-7900-03	1	Rack ASM
18	3256-26	2	Washer-Flat

Ref	Part No.	Qty.	Description
19	3272-10	1	Pin-Cotter
20	75-5940	1	Hose
21	100-4872	1	Plate-Switch, Neutral
22	75-6250	1	Hose
23	3256-23	4	Washer-Flat
24	3255-8	1	Washer-Lock
25	3296-20	4	Nut-Lock, NI
26	75-0600	1	Unit-Steering, Power
27	32144-11	2	Screw-HWHTF
28	100-1270	1	Switch-Proximity
29	75-2810	1	Bracket-Column, Steering
31	3296-2	1	Nut-Lock
32	104-1450	1	Bolt-CARR
33	104-9324	1	Speedometer
33:1	3296-1	4	Nut-Lock
34	104-2541	1	Switch-Key
34:1	218-461	1	Nut-HH
34:2	3254-5	1	Washer-Tooth
35	63-8360	1	Key-Ignition
36	3256-14	1	Washer-Flat

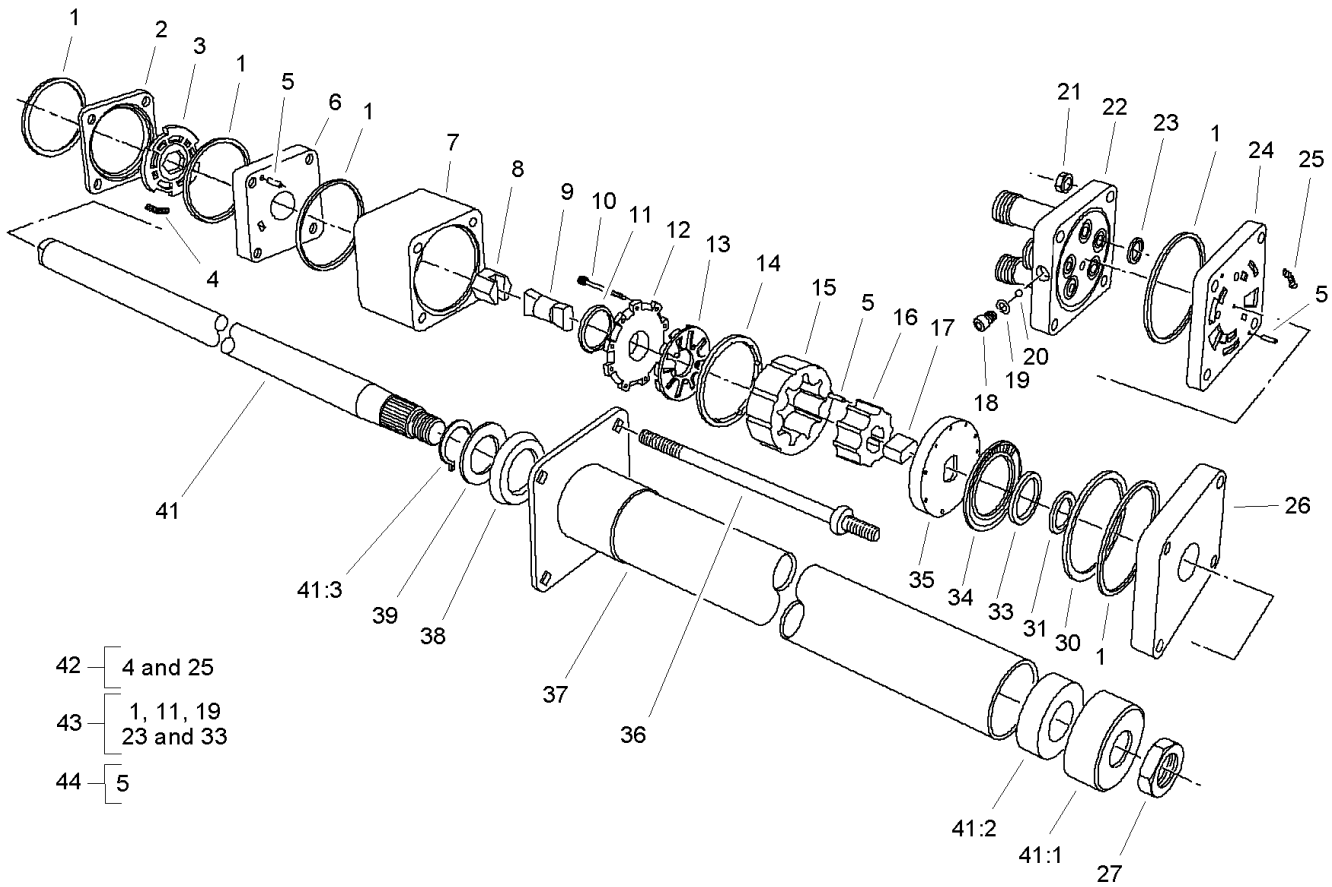

Power Steering Unit No. 75-0600

Ref	Part No.	Qty.	Description
❷1		5	Ring-Seal
❷2		1	Ring-Valve
❷3		1	Plate-Valve
❷4		3	Spring
❷5		9	Pin-Alignment
❷6		1	Manifold-Isolation
❷7		1	Ring-Metering
❷8		1	Hex Drive ASM
❷9		1	Link-Drive
❷10		11	Screw-HSH
❷11		1	Seal-Commutator
❷12		1	Cover-Commutator
❷13		1	Commutator
❷14		1	Ring-Commutator
❷15		1	Stator
❷16		1	Rotor
❷17		1	Spacer-Link, Drive
❷18		1	Plug
❷19		1	Seal-Dust
❷20		1	Ball
❷21		4	Nut-Hex
❷22		1	Cover-Port
❷23		5	Seal-Dust
❷24		1	Manifold-Port
❷25		3	Spring

Ref	Part No.	Qty.	Description
❷26		1	Plate-Cover, Upper
27	3220-6	1	Nut-Jam
❷30		1	Spacer-Bearing, Thrust
❷31		1	Spacer-Seal
❷33		1	Seal-Face
❷34		1	Bearing-Thrust
❷35		1	Plate-Drive
36	93-3609	4	Bolt-Special
37	66-9860	1	Upper Cover And Jacket ASM
38	66-9870	1	Plate-Retaining
39	66-9880	1	Washer-Plate, Retaining
41	66-9900	1	Shaft-Input
41:1	92-7315	1	Seal-Upper
41:2	104-9327	1	Bushing-Column
41:3	66-9890	1	Ring-Retaining
42	66-9970	1	Spring Kit
43	66-9980	1	Seal Kit
44	66-9990	1	Needle Roller Kit

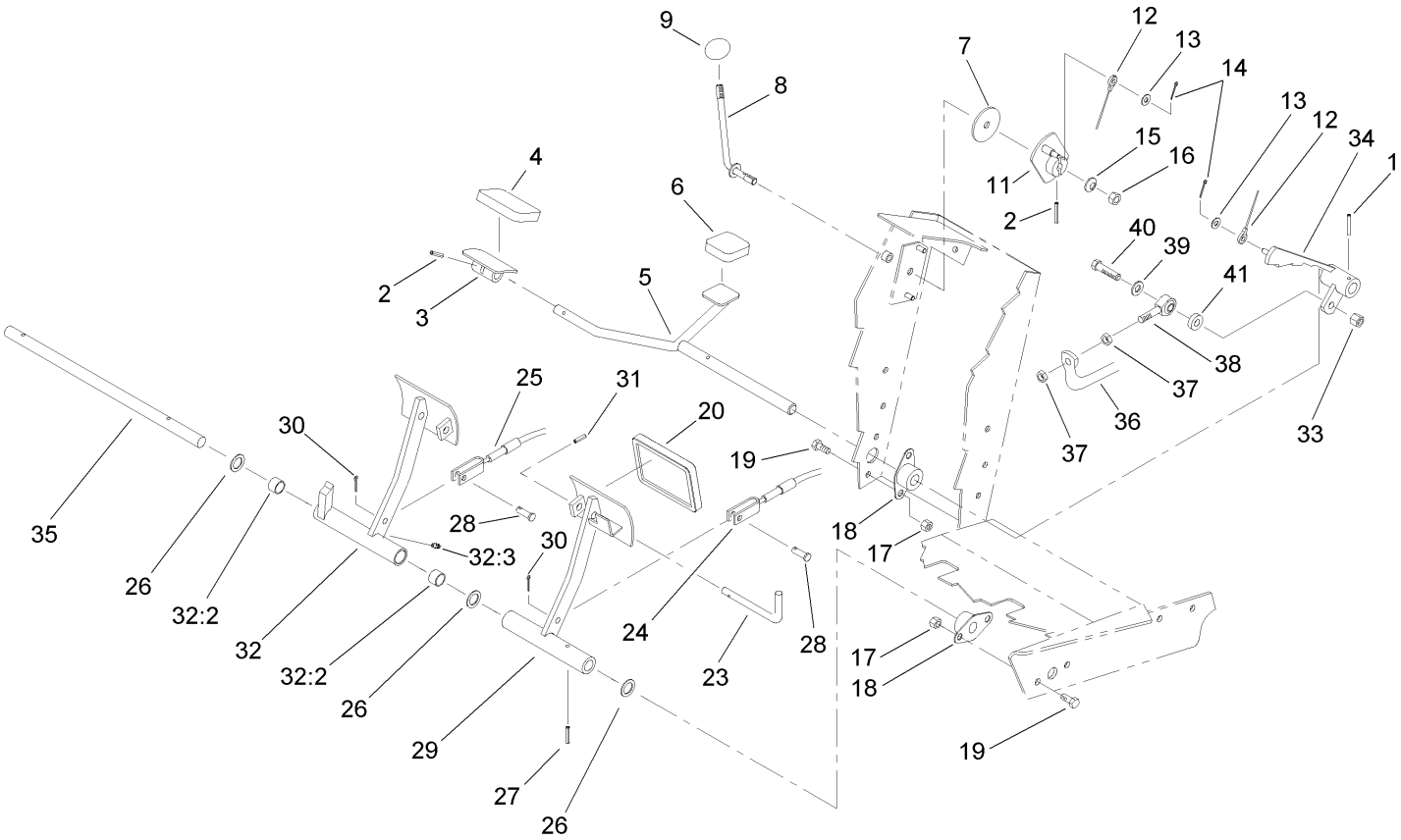

Traction and Brake Pedal Assembly

Ref	Part No.	Qty.	Description
1	32121-6	1	Pin-Roll, Slotted
2	32121-45	2	Pin-Spring
3	49-6440-03	1	Pedal-Forward
4	74-9100	1	Pad-Pedal, Forward
5	75-2970	1	Pedal-Traction
6	74-9110	1	Pad-Pedal, Reverse
7	75-6550	1	Disc-Friction
8	75-6490	1	Lever ASM
9	233-42	1	Knob
11	75-6510	1	Bracket-Lever
12	75-6580	1	Cable-Pedal
13	3256-22	2	Washer-Flat
14	3272-2	2	Pin-Cotter
15	3290-461	1	Washer-Spring
16	3296-59	1	Nut-Lock, NI
17	3296-29	8	Nut-Lock, NI
18	256-236	4	Bearing-Mount, Flange
19	322-3	8	Screw-HH
20	93-8742	2	Footpad-Brake
23	63-7880	1	Pin-Latch, Brake
24	63-7733	1	LH Brake Cable ASM
25	63-7732	1	RH Brake Cable ASM
26	3256-69	3	Washer-Flat
27	32121-16	1	Pin-Spring

Ref	Part No.	Qty.	Description
28	283-58	2	Pin-Clevis
29	75-1440-03	1	LH Brake Pedal ASM
30	3272-10	2	Pin-Cotter
31	32121-50	1	Pin-Spring
32	75-1430	1	Pedal-Brake, RH
32:2	256-42	2	Bushing
32:3	302-5	1	Fitting-Grease
33	3296-39	1	Nut-Lock, NI
34	75-3270-03	1	Hub-Pivot, Traction
35	75-1470	1	Pin-Pivot, Brake
36	75-2170-03	1	Tube-Control, Pump
37	3220-3	2	Nut-HJ
38	2411-36	1	Bearing-End, Rod
39	3256-24	1	Washer-Flat
40	323-9	1	Screw-HH
41	5-0652	1	Spacer

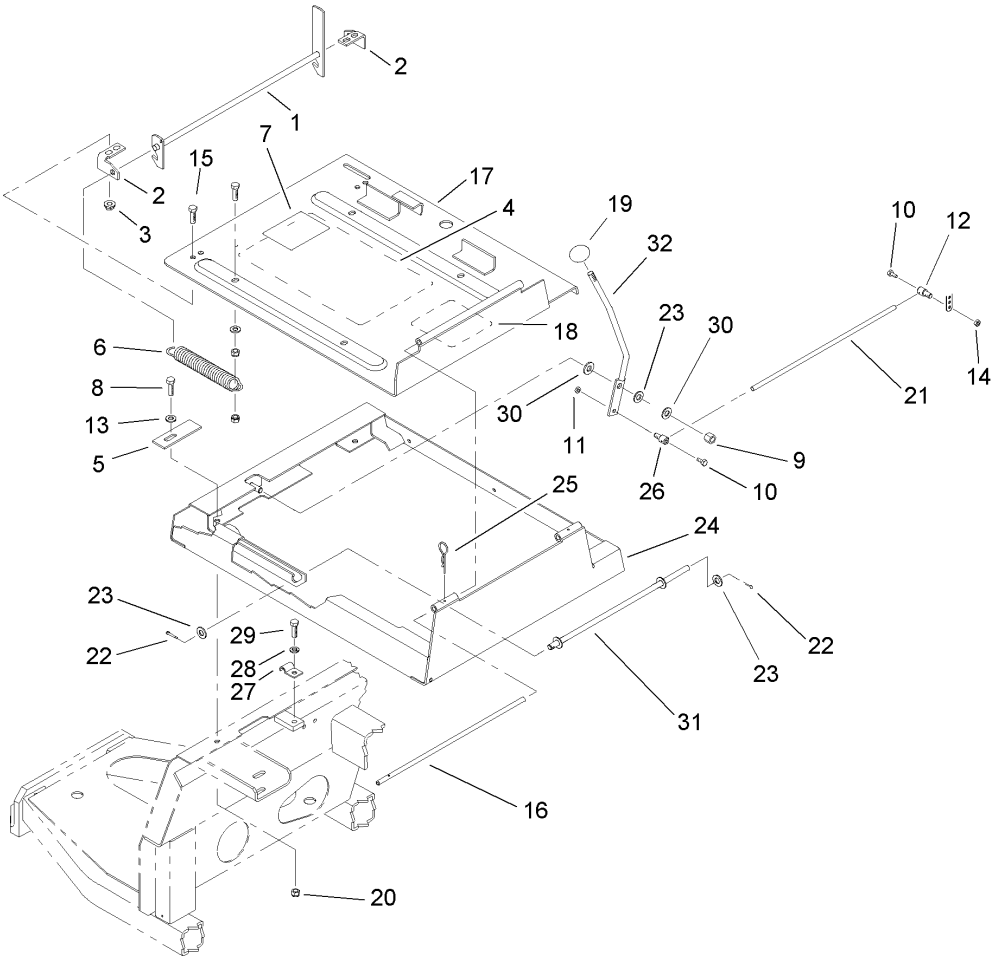

Seat Frame and Throttle Assembly

Ref	Part No.	Qty.	Description
1	98-2354-03	1	Latch-Seat
2	98-2353	2	Bracket-Latch, Seat
3	32128-25	4	Nut-HF
4	98-9342	1	Decal-Solenoid, Information
5	98-9302	1	Plate-Stop, Idler
6	66-4190-03	1	Spring-Idler, Clutch
7	105-4674	1	Decal-Noise
8	322-5	1	Screw-HH
9	3296-39	1	Nut-Lock, NI
10	25-8640	2	Screw-HH
11	3296-3	1	Nut-Lock
12	98-9311	1	Swivel-Throttle
13	3256-23	1	Washer-Flat
14	3296-20	1	Nut-Lock, NI
15	322-3	7	Screw-HH
16	75-3400	1	Shaft-Pivot, Seat
17	98-2350-03	1	Seat Plate ASM
18	106-9224	1	Decal-Danger
19	233-42	1	Knob
20	3296-29	4	Nut-Lock, NI
21	98-9303	1	Cable-Throttle
22	3272-10	2	Pin-Cotter
23	3256-24	3	Washer-Flat
24	98-2352-03	1	Frame-Seat

Ref	Part No.	Qty.	Description
25	3290-467	1	Pin-Hair
26	93-0021	1	Swivel-Cable, Throttle
27	3-6657	1	Clip-Skid
28	3253-3	1	Washer-Lock
29	321-4	1	Screw-HH
30	66-2920	2	Washer-Friction
31	75-3680-03	1	Rod-Seat
32	75-3430-03	1	Lever-Throttle

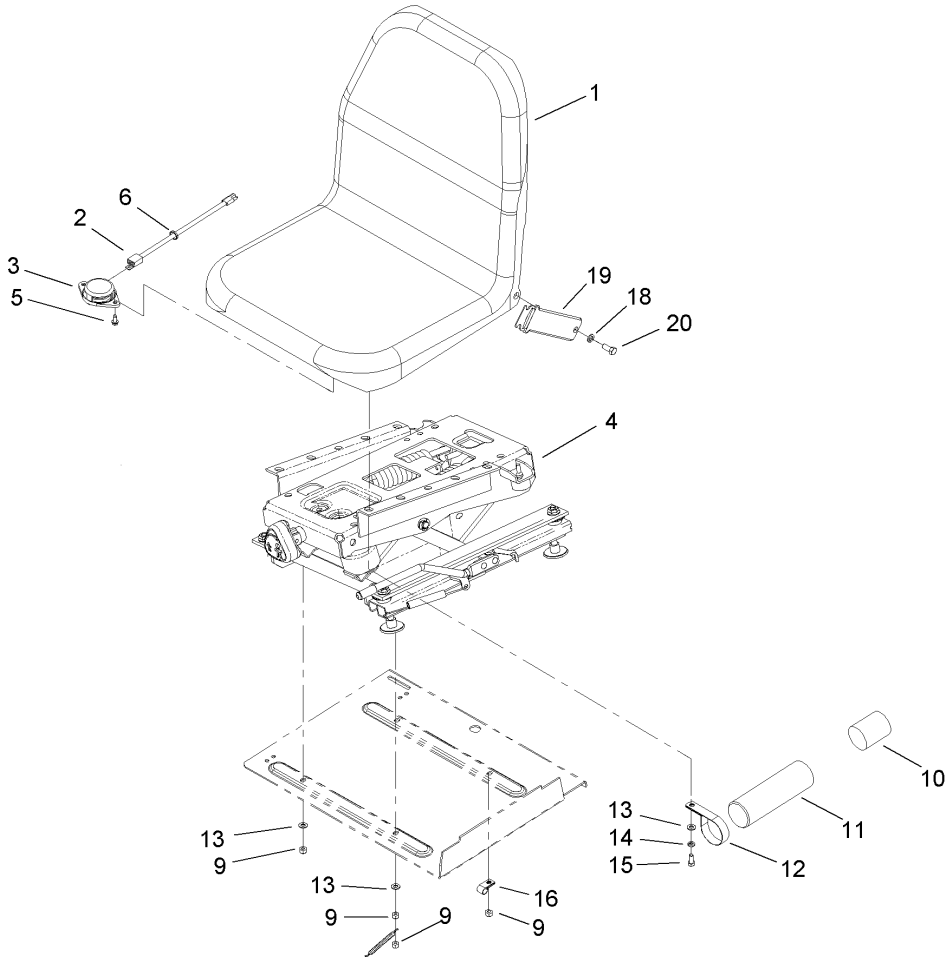

Seat and Suspension Assembly

Ref	Part No.	Qty.	Description
1	104-4620	1	Seat
2	106-7090	1	Harness-Wire, Seat Switch
3	92-6282	1	Switch-Seat
4	76-1970	1	Seat Suspension ASM
5	32144-10	2	Screw-HWH
6	93-0140	1	Grommet-Rubber
9	3296-29	5	Nut-Lock, NI
10	104-7048	1	Cap-Housing
11	104-7050	1	Housing-Manual
12	2412-133	2	R-Clamp
13	3256-23	8	Washer-Flat
14	3253-4	4	Washer-Lock
15	322-3	4	Screw-HH
16	2412-93	1	Clamp-R
18	3253-6	2	Washer-Lock
19	21-4191	1	Seat Belt ASM
20	3212-4	2	Screw-HH

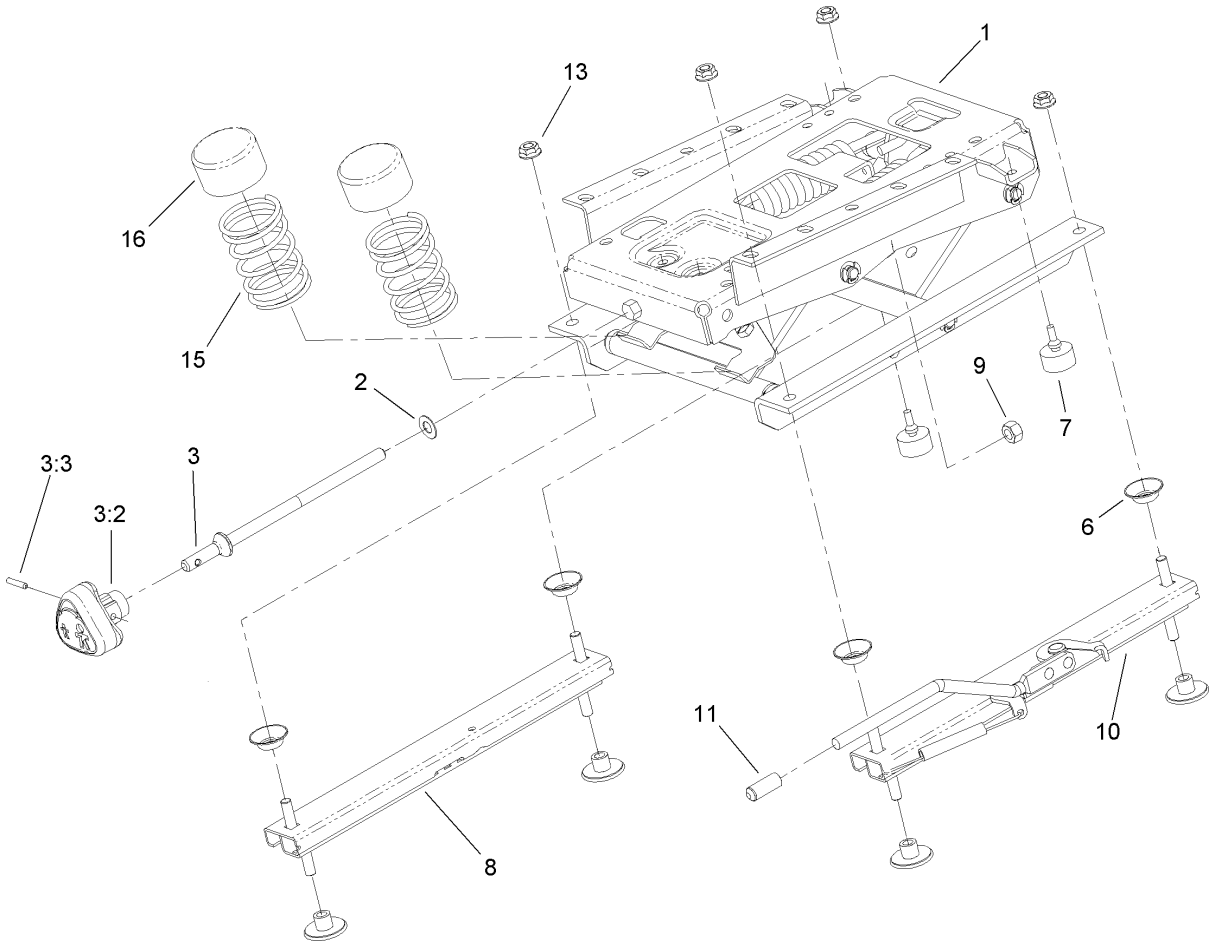

Seat Suspension Assembly No. 76-1970

Ref	Part No.	Qty.	Description
1	106-8085	1	Suspension ASM
2	3256-24	1	Washer-Flat
3	106-1031	1	Tension Adjuster Knob ASM
3:2	106-8093	1	Knob-Adjust, Tension
3:3	32121-45	1	Pin-Spring
6	66-9290	4	Spacer-Suspension
7	76-2940	2	Bumper
8	66-8530	1	Adjuster
9	32153-2	1	Nut-Lock, Side
10	66-8510	1	Adjuster W / Handle
11	75-3570	1	Tip-Vinyl
13	32128-25	4	Nut-HF
15	93-3163	2	Spring
16	93-3164	2	Cap

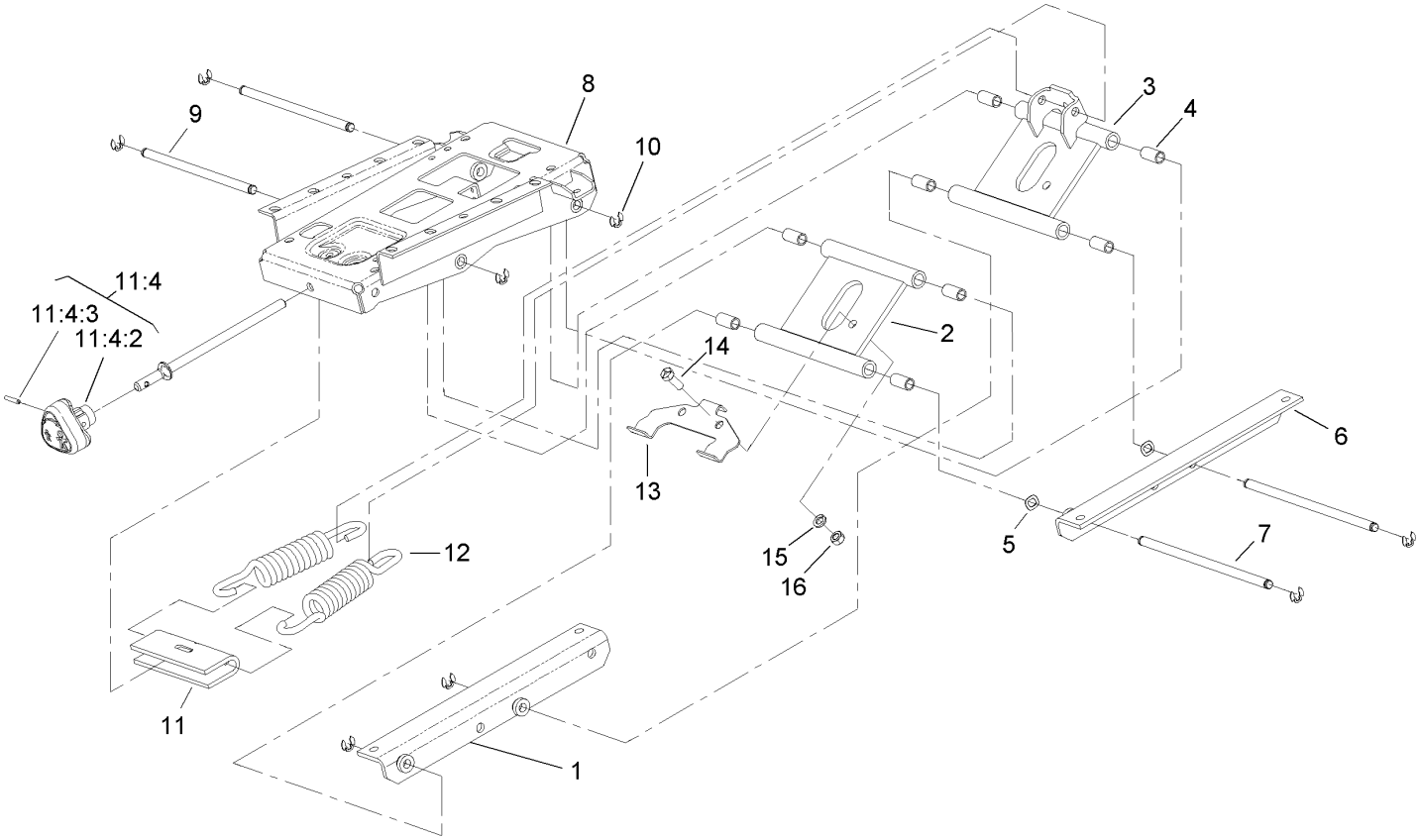

Suspension Assembly No. 106-8085

Ref	Part No.	Qty.	Description
1	106-8086	1	Bracket-Mounting, RH
2	106-8087	1	Arm
3	106-8088	1	Bellcrank
4	76-1920	8	Sleeve-Bearing
5	108472	2	Washer-Wave
6	106-8089	1	Bracket-Mounting, LH
7	106-8090	2	Shaft-Pivot
8	66-8600	1	Frame-Upper
9	76-1910	2	Shaft-Pivot
10	32151-47	8	Ring-Retaining
11	76-1960	1	Knob Kit
❷11:4		1	Tension Adjuster Knob ASM
11:4:2	106-8093	1	Knob-Adjust, Tension
11:4:3	32121-45	1	Pin-Spring
12	76-1940	2	Spring-Extension
13	93-3165	1	Bracket
14	322-6	1	Screw-HH
15	3253-33	1	Washer-Lock
16	3217-6	1	Nut-Hex

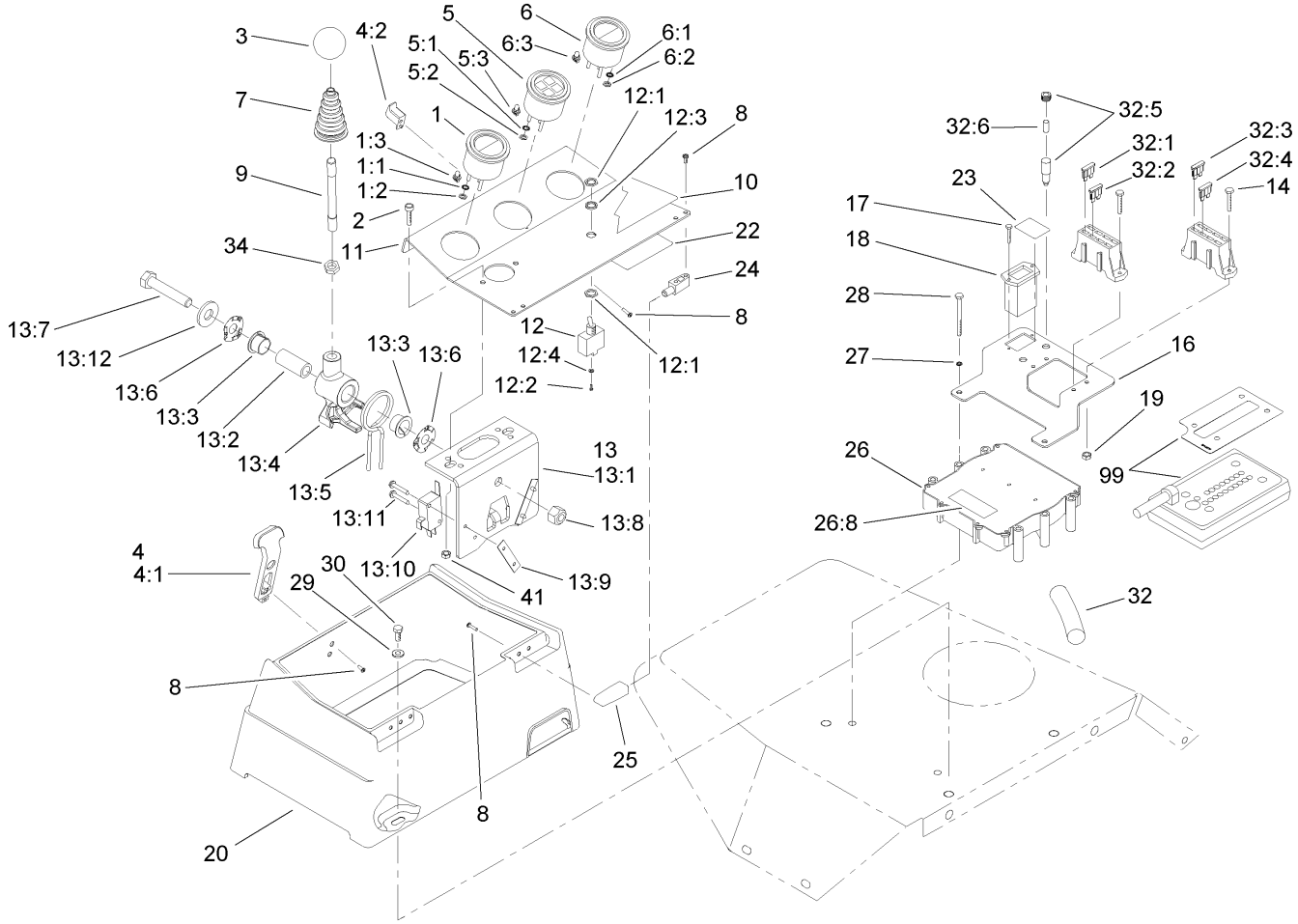

Control Console Assembly

Ref	Part No.	Qty.	Description
1	98-9339	1	Gauge-Fuel
1:1	3254-1	3	Washer-Lock, Int
1:2	3217-27	3	Nut-Hex
1:3	105-9265	1	Bulb And Lamp ASM
2	3258-166	2	Screw-PRH
3	233-42	1	Knob
4	94-5626	1	Latch-Draw, Flexible
4:1	100-5806	1	Handle-Latch
4:2	100-5807	1	Keeper-Latch
5	98-9306	1	Light-Warning
5:1	3254-1	1	Washer-Lock, Int
5:2	3217-27	1	Nut-Hex
5:3	105-9264	4	Bulb And Lamp ASM
6	98-9308	1	Gauge-Temperature
6:1	3254-1	3	Washer-Lock, Int
6:2	3217-27	3	Nut-Hex
6:3	105-9265	1	Bulb And Lamp ASM
7	93-5961	1	Boot-Lever
8	32144-1	11	Screw-Taptite
9	105-7508	1	Lever-Joystick
10	104-9296	1	Decal-Control
11	104-9251-03	1	Plate-Instrument
12	99-8352	1	Switch-Backlap, Master
12:1	218-498	2	Locknut

Ref	Part No.	Qty.	Description
12:2	218-588	3	Screw
12:3	218-589	1	Washer
12:4	3253-19	3	Washer-Lock
13	106-4167	1	Joystick Bracket ASM
13:1	106-4168-03	1	Bracket-Joystick
13:2	106-4192	1	Spacer
13:3	93-5547	2	Bushing-Nylon
13:4	105-7507	1	Hub-Pivot, Joystick
13:5	105-8289	1	Spring-Torsion
13:6	106-4193	2	Washer-Finger, Spring
13:7	322-9	1	Screw-HH
13:8	3296-29	1	Nut-Lock, NI
13:9	3290-354	2	Nut-Speed
13:10	111332	2	Switch
13:11	95-3003	4	Screw-HH
13:12	3256-3	1	Washer-Flat
14	32105-13	4	Screw-SHH
16	104-1499-03	1	Bracket-Block, Fuse
17	32144-18	2	Screw-HH
18	75-6820	1	Hourmeter
19	3296-2	4	Nut-Lock
20	104-0027	1	Box-Control
22	94-6767	1	Decal-Fuses
23	104-9298	1	Decal-Controller

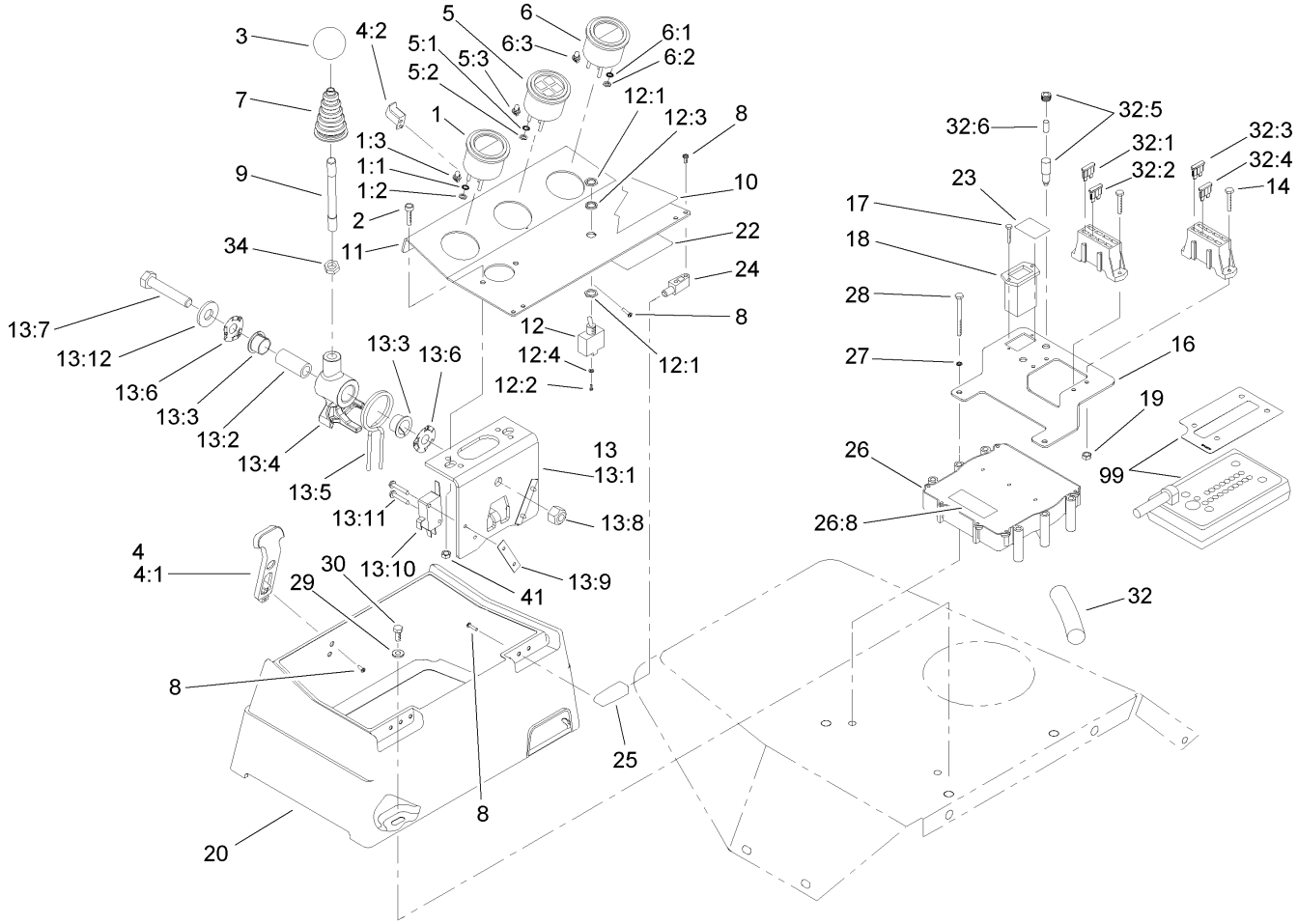

Control Console Assembly (continued)

Ref	Part No.	Qty.	Description
24	104-1496	2	Hinge-Pin
25	104-1497	2	Hinge-Receiver
26	92-5720	1	Controller
26:8	93-8053	1	Decal
27	3253-3	2	Washer-Lock
28	321-14	2	Screw-HH
29	3256-3	3	Washer-Flat
30	322-5	3	Screw-HH
32	108-0637	1	Harness-Wire
32:1	94-9157	1	Fuse-Blade, 4 Amp
32:2	114241	1	Fuse-7.5 Amp
32:3	218-578	3	Fuse-10 Amp
32:4	109101	1	Fuse-20 Amp
32:5	85-4491	1	Light-Indicator (Includes Lamp)
32:6	219-19	1	Lamp-Green
34	3218-3	1	Nut-Jam
41	32128-33	2	Nut-HF
99	104-9270	1	Decal-Diagnostics
99	85-4750	1	Box-Display, Diagnostic

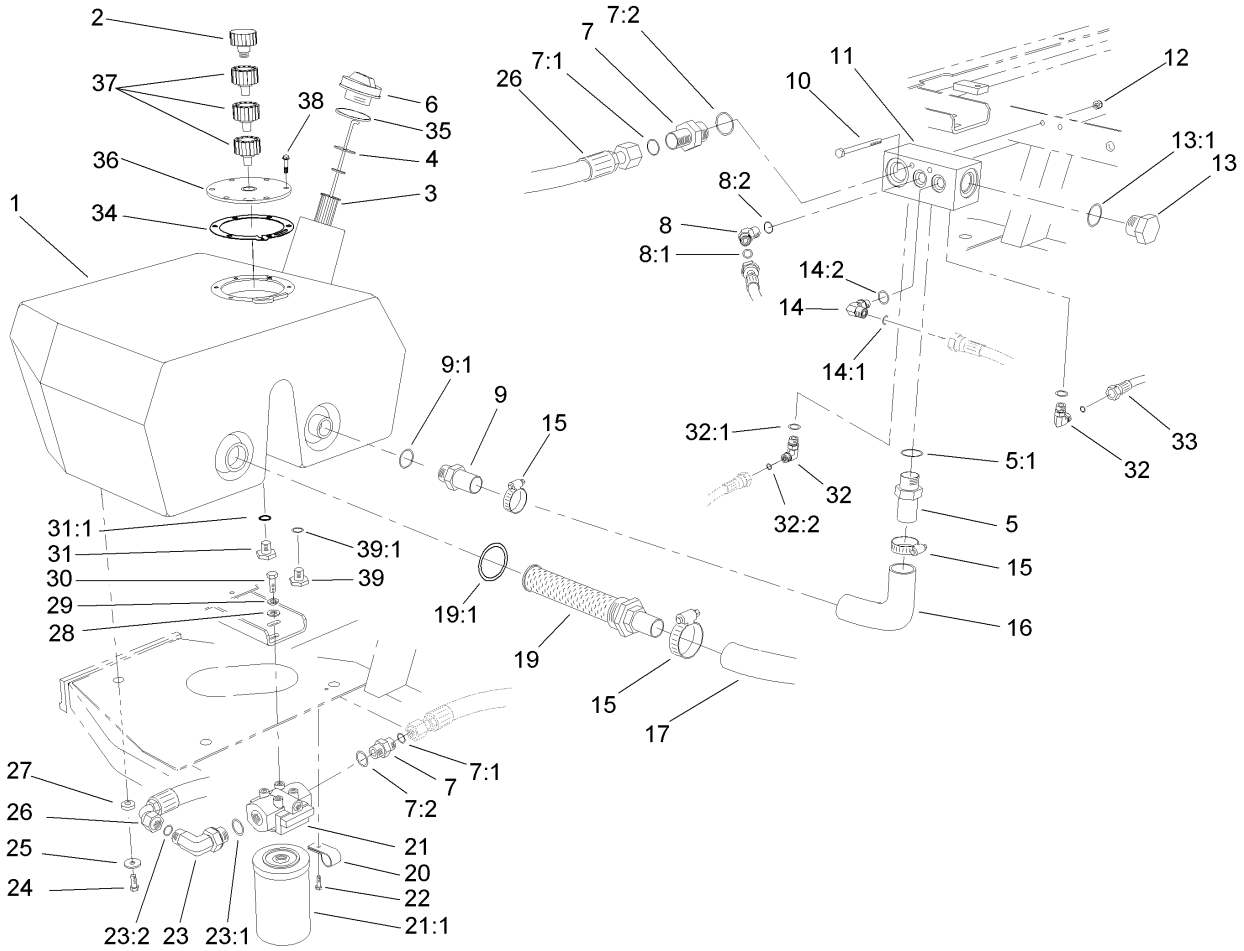

Hydraulic Filter and Reservoir Assembly

Ref	Part No.	Qty.	Description
1	104-9254	1	Tank-Oil
2	68-6150	1	Breather
3	61-2790	1	Filter-Screen
4	94-9411	1	Dipstick
5	354-73	1	Fitting-Straight
5:1	237-81	1	O-Ring
6	93-7498	1	Plug-Plastic
7	340-8	2	Adapter
7:1	237-65	1	O-Ring
7:2	237-81	1	O-Ring
8	340-87	1	Fitting-HYD, 45 DEG
8:1	237-22	1	O-Ring
8:2	237-42	1	O-Ring
9	99-6932	1	Fitting-Barb, Hose
9:1	237-117	1	O-Ring
10	321-23	2	Screw-HH
11	92-9098	1	Manifold-Tank
12	3296-42	2	Nut-Lock, NI
13	354-74	1	Fitting
13:1	237-81	1	O-Ring
14	340-77	1	Fitting-HYD, 90 DEG
14:1	237-22	1	O-Ring
14:2	237-42	1	O-Ring
15	2412-34	3	Clamp-Hose

Ref	Part No.	Qty.	Description
16	75-5720	1	Hose-Return
17	75-6870	1	Hose-Inlet, Pump
19	104-7546	1	Strainer-Tank
19:1	340-136	1	O-Ring
20	2412-93	2	Clamp-R
21	75-1300	1	Oil Filter ASM
21:1	75-1310	1	Element-Filter
22	32144-10	2	Screw-HWH
23	340-139	1	Fitting-HYD, 90 DEG
23:1	237-81	1	O-Ring
23:2	237-65	1	O-Ring
24	33105-025	3	Screw-HHF
25	63-8410	3	Washer
26	75-6130	1	Hose ASM
27	240-11	3	Bushing-Flange
28	3256-24	2	Washer-Flat
29	3253-21	2	Washer-Lock
30	323-4	2	Screw-HH
31	353-550	1	Plug-HYD, HH
31:1	237-79	1	O-Ring
32	340-82	2	Adapter
32:1	237-42	1	O-Ring
32:2	237-21	1	O-Ring
33	100-3739	1	Return Drain Hose ASM

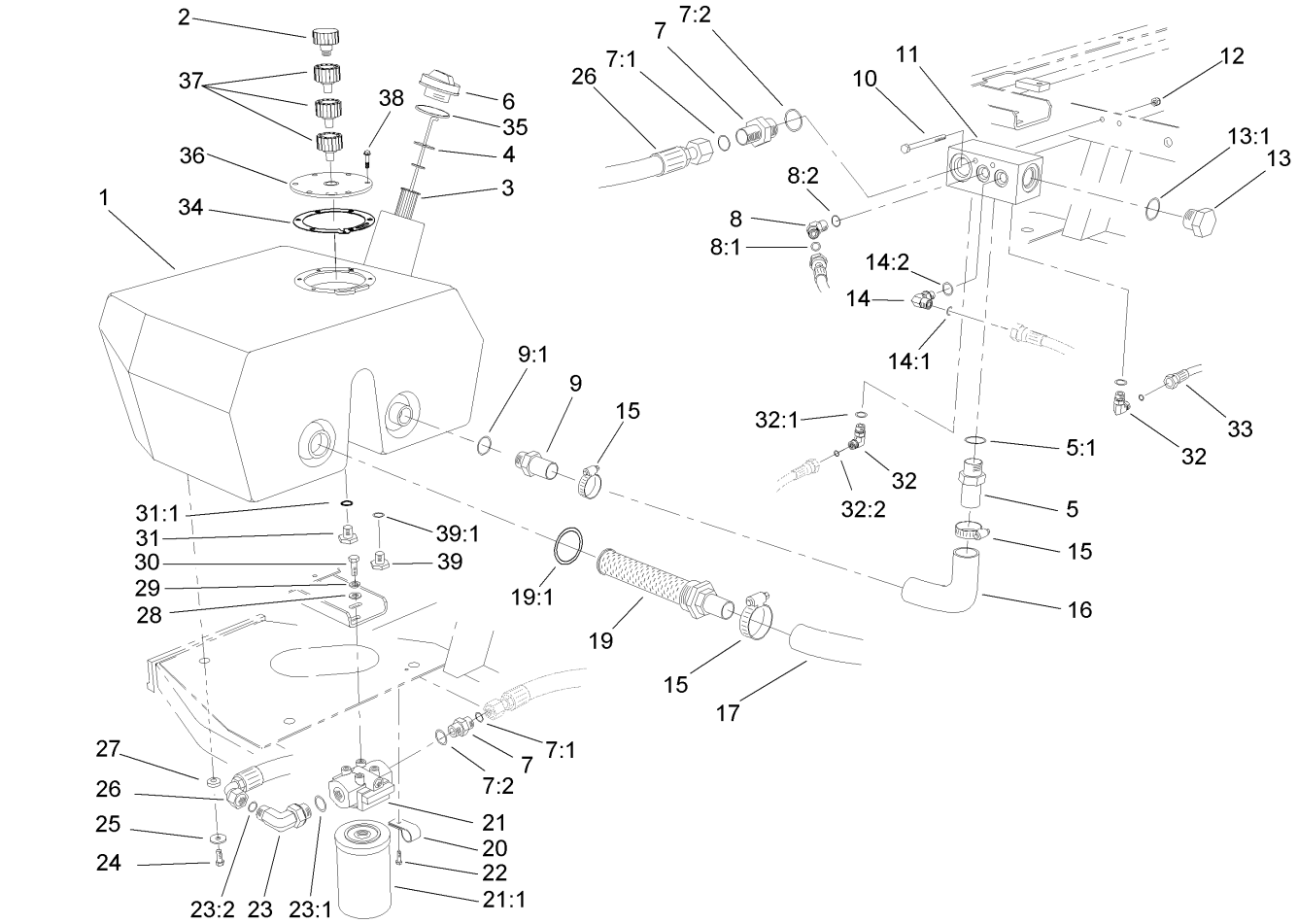

Hydraulic Filter and Reservoir Assembly (continued)

Ref	Part No.	Qty.	Description
34	93-7499	1	Gasket
35	237-101	1	O-Ring
36	93-7588	1	Cover-Tank
37	92-8020	3	Adapter-Breather
38	33104-020	6	Screw-HHF
39	353-508	1	Plug
39:1	237-42	1	O-Ring

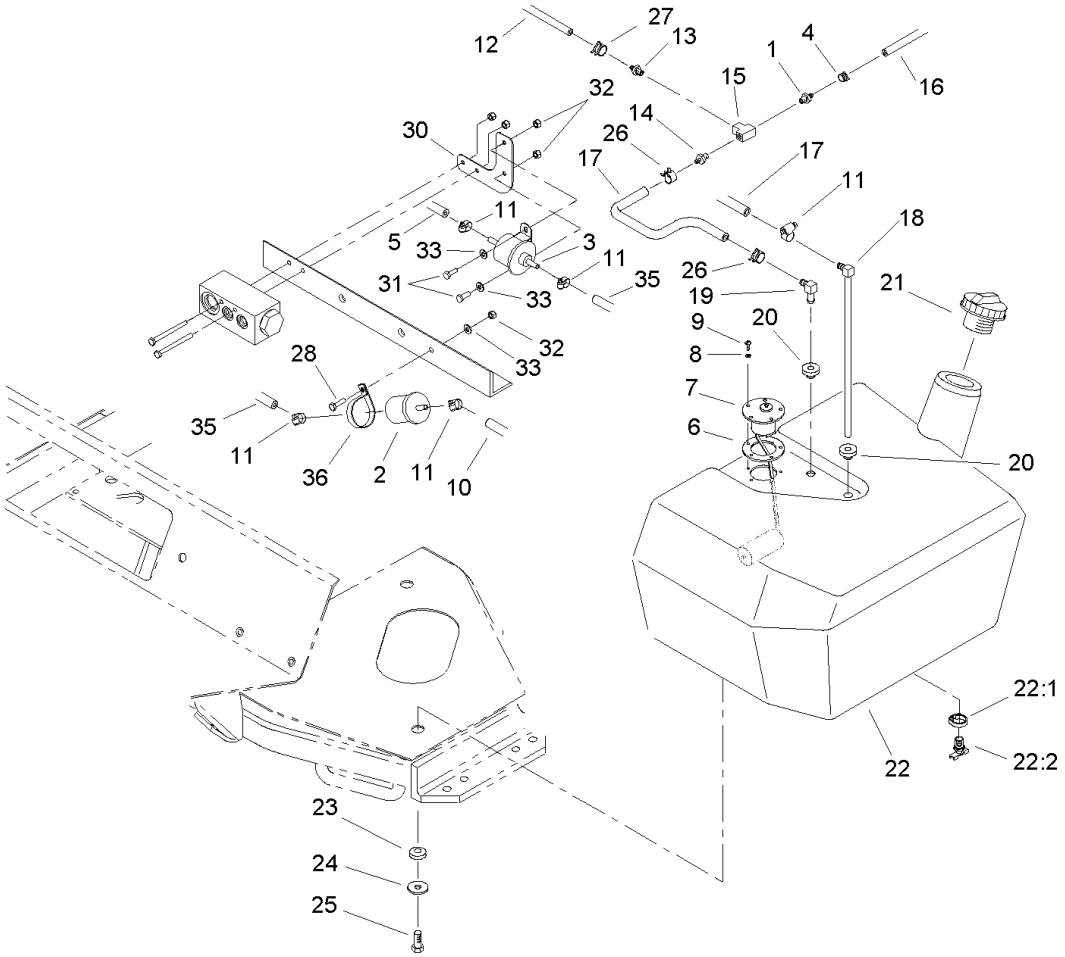

Fuel Tank Assembly

Ref	Part No.	Qty.	Description
1	304-73	1	Connector-Hose
2	98-7612	1	Filter-Fuel
3	107-0122	1	Pump-Fuel, Electric
4	2412-98	1	Clamp
5	110-4100	1	Hose-Fuel
6	62-7650	1	Gasket
7	63-7640	1	Sender-Fuel
8	3253-15	5	Washer-Lock
9	32122-24	5	Screw-PTH
10	27-5370	1	Hose-Fuel
11	2412-108	5	Clamp-Worm
12	75-4700	1	Hose-Fuel
13	354-22	1	Fitting-Barb
14	354-21	1	Fitting-Barb
15	354-20	1	Fitting-Tee
16	98-9338	1	Hose-Fuel
17	93-2042	1	Hose-Fuel
18	66-8121	1	Standpipe
19	46-6550	1	Fitting-Elbow, 90 DEG
20	46-6560	2	Bushing
21	93-3102	1	Cap-Fuel
22	105-7933	1	Tank-Fuel
22:1	2412-36	1	Clamp-Hose
22:2	304-46	1	Draincock

Ref	Part No.	Qty.	Description
23	240-11	3	Bushing-Flange
24	63-8410	3	Washer
25	33105-025	3	Screw-HHF
26	92-2379	2	Clamp-Hose
27	2412-146	2	Clamp-Hose
28	321-6	1	Screw-HH
30	104-9333	1	Bracket-Pump, Fuel
31	321-4	2	Screw-HH
32	3296-42	3	Nut-Lock, NI
33	3256-22	3	Washer-Flat
❶34	3290-378	1	Tie-Cable
35	27-5360	1	Hose-Fuel
36	2412-148	1	Clamp-R

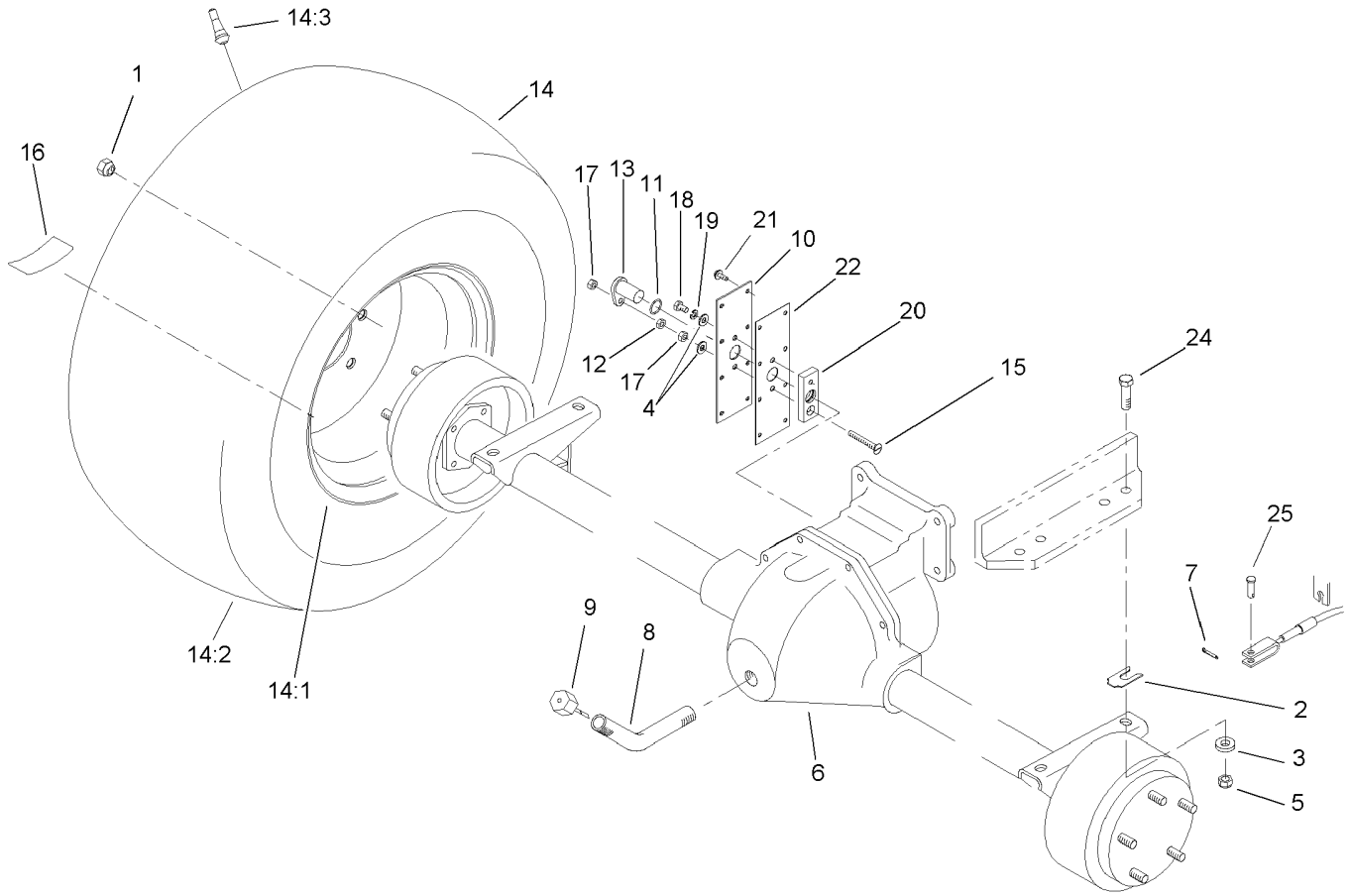

Front Axle Assembly

Ref	Part No.	Qty.	Description
1	242-50	10	Nut-Lug
2	42-6080	5	Shim-Axle
3	66-6480	4	Washer
4	3256-22	2	Washer-Flat
5	3296-48	4	Nut-Lock, NI
6	108-0640-03	1	Drive Axle ASM
7	3272-10	2	Pin-Cotter
8	75-6850	1	Tube-Fill, Oil
9	27-3710	1	Dipstick
10	85-4330	1	Cover-Gear
11	237-181	1	O-Ring
12	3218-1	1	Nut-Jam
13	85-4350	1	Sensor-Geartooth
❷14		2	Wheel And Tire ASM
14:1	99-6984	1	Wheel ASM
14:2	98-2373	1	Tire-Ultra Trac
14:3	232-27	1	Stem-Valve
15	32108-9	1	Screw-FH
16	106-9206	2	Decal-Torque, Wheel
17	3296-56	2	Nut-Lock, NI
18	321-2	1	Screw-HH
19	3253-3	1	Washer-Lock
20	85-4340	1	Plate-Mounting, Sensor
21	32144-112	8	Screw-HWH

Ref	Part No.	Qty.	Description
22	92-5797	1	Gasket-Axle
24	324-7	4	Screw-HH
25	283-58	2	Pin-Clevis

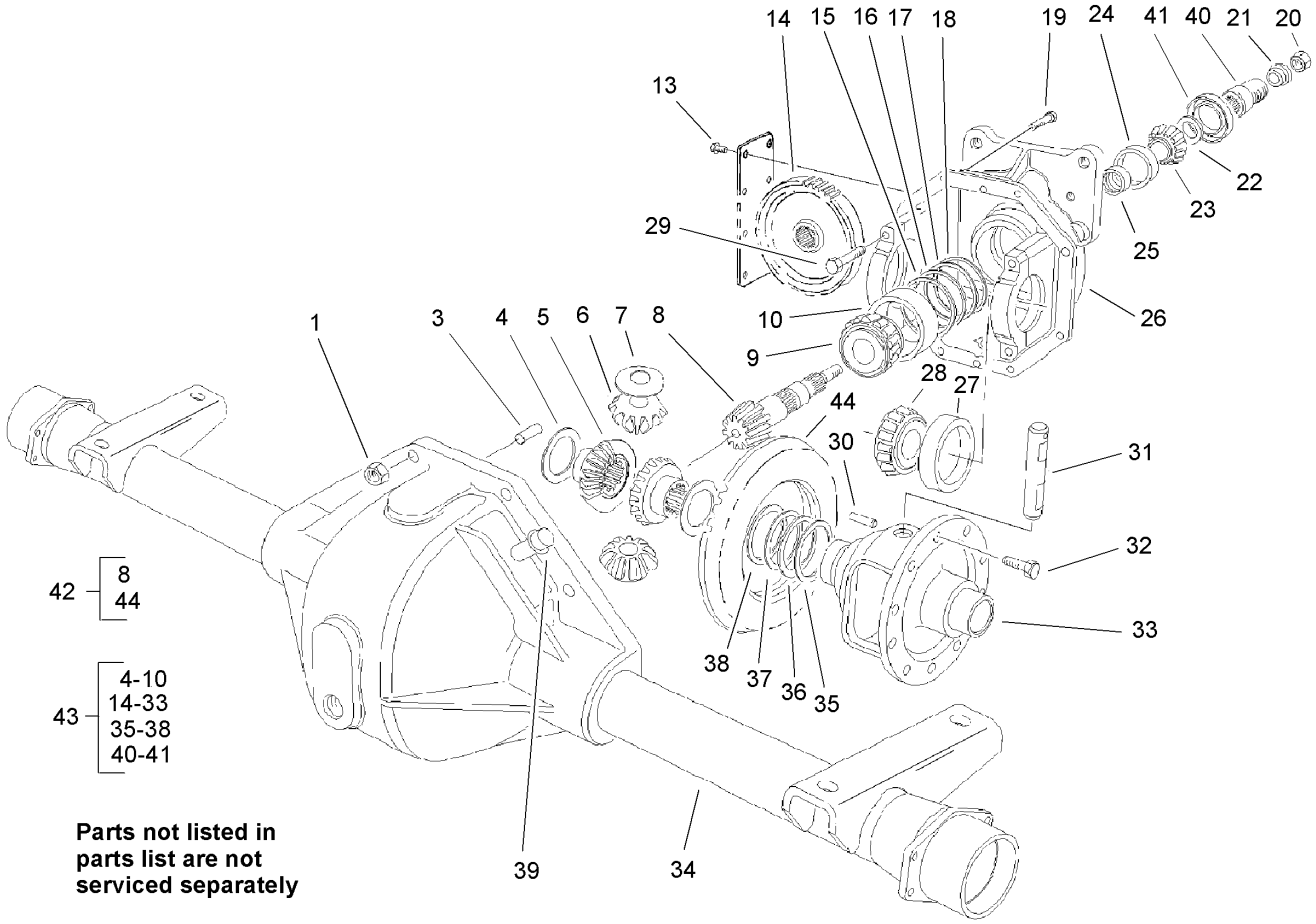

Drive Axle Assembly No. 108-0640-03

Ref	Part No.	Qty.	Description
1	32149-5	8	Nut-Keps
3	21-8270	2	Pin-Dowel
4	21-7720	2	Washer-Thrust
5	24-8790	2	Gear-Differential
6	21-7690	2	Pinion-Differential
7	21-7730	2	Washer-Thrust, Pinion
9	43-6760	1	Bearing-Roller, Cone Taper
10	43-6750	1	Bearing-Taper, Cup
13	32144-112	8	Screw-HWH
14	86-7230	1	Gear-Input, Transmission
15	43-6710	1	Shim-Pinion (.003)
16	43-6711	1	Shim-Pinion (.005)
17	43-6712	1	Shim-Pinion (.010)
18	43-6713	1	Shim-Pinion (.030)
19	3210-8	8	Screw-HH
20	71-4350	1	Nut
21	83-5130	1	Spacer-Pinion
22	72-3570	1	Shim-Bearing, Front (.094)
22	72-3571	1	Shim-Bearing, Front (.096)
22	72-3572	1	Shim-Bearing, Front (.098)
22	72-3573	1	Shim-Bearing, Front (.100)
22	72-3574	1	Shim-Bearing, Front (.102)
22	72-3575	1	Shim-Bearing, Front (.104)
22	72-3576	1	Shim-Bearing, Front (.106)

Ref	Part No.	Qty.	Description
22	72-3577	1	Shim-Bearing, Front (.108)
22	72-3578	1	Shim-Bearing, Front (.110)
22	72-3580	1	Shim-Bearing, Front (.112)
22	72-3581	1	Shim-Bearing, Front (.114)
22	72-3582	1	Shim-Bearing, Front (.116)
22	72-3583	1	Shim-Bearing, Front (.118)
22	72-3584	1	Shim-Bearing, Front (.120)
22	72-3585	1	Shim-Bearing, Front (.125)
22	72-3586	1	Shim-Bearing, Front (.127)
22	72-3587	1	Shim-Bearing, Front (.129)
22	72-3588	1	Shim-Bearing, Front (.131)
22	72-3590	1	Shim-Bearing, Front (.133)
22	72-3591	1	Shim-Bearing, Front (.135)
22	72-3592	1	Shim-Bearing, Front (.137)
22	72-3593	1	Shim-Bearing, Front (.139)
22	72-3594	1	Shim-Bearing, Front (.141)
22	72-3595	1	Shim-Bearing, Front (.143)
22	72-3596	1	Shim-Bearing, Front (.145)
22	72-3597	1	Shim-Bearing, Front (.147)
22	72-3598	1	Shim-Bearing, Front (.149)
22	72-3600	1	Shim-Bearing, Front (.151)
23	254-91	1	Cone-Bearing
24	21-8390	1	Cup-Bearing
25	21-8020	1	Spacer-Bearing

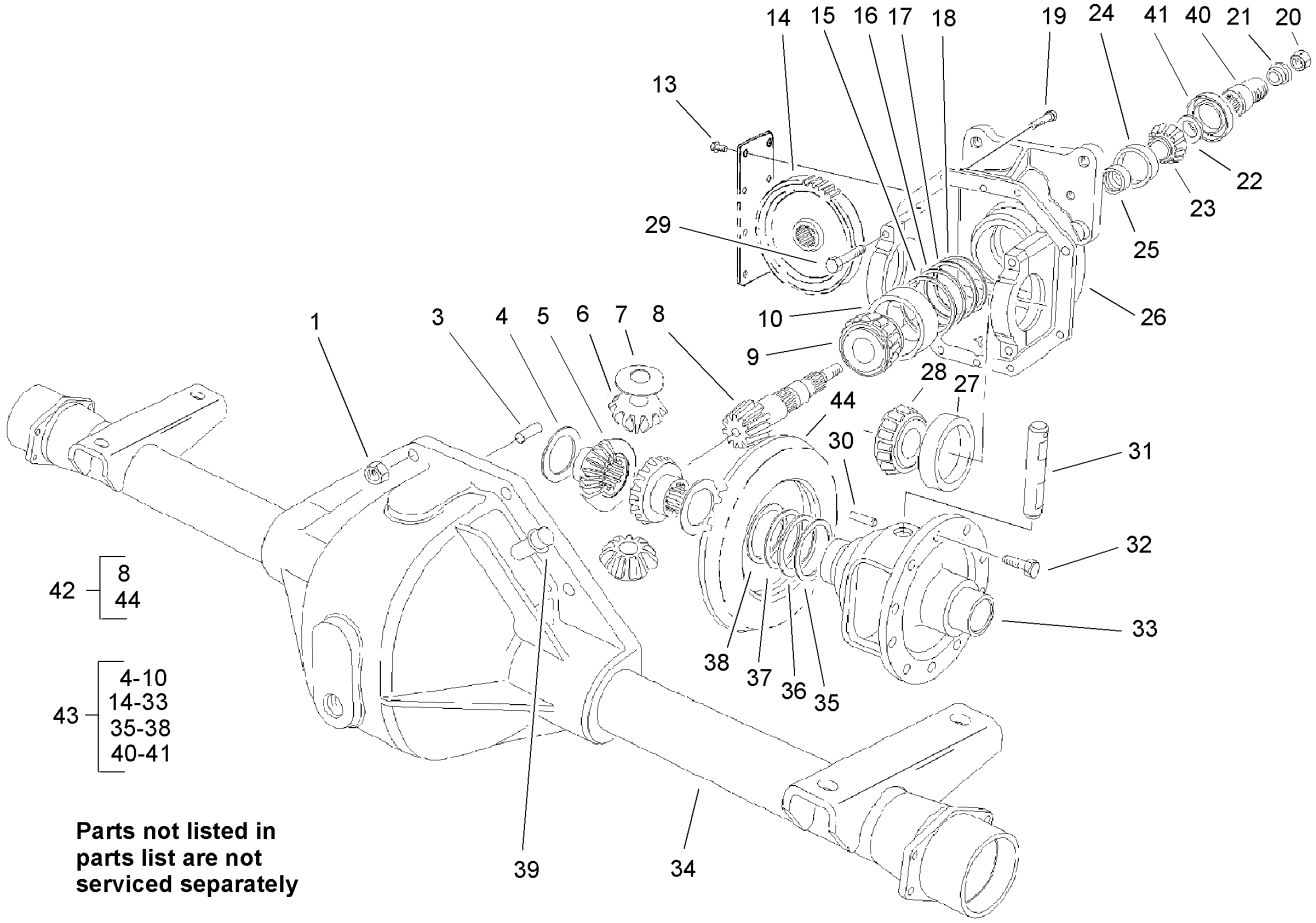

Drive Axle Assembly No. 108-0640-03 (continued)

Ref	Part No.	Qty.	Description
26	93-3619	1	Upper Housing ASM
27	254-66	2	Cup-Bearing, Roller
28	254-65	2	Cone-Bearing, Roller
29	92-1773	4	Screw-HHF
30	21-7710	1	Pin-Roll
31	21-7700	1	Shaft-Mate, Pinion
32	21-7770	5	Screw-Gear, Drive
33	21-7670	1	Case-Differential
34	108-1422-03	1	Lower Housing ASM
35	21-8120	1	Shim-Bearing, Differential (.030)
36	21-8110	1	Shim-Bearing, Differential (.010)
37	21-8100	1	Shim-Bearing, Differential (.005)
38	21-8090	1	Shim-Bearing, Differential (.003)
39	72-9420	1	Vent
40	83-4910	1	Coupler-Pinion
41	71-4330	1	Seal
42	93-3618	1	Gear And Pinion ASM
43	93-3617	1	Cover And Carrier Kit

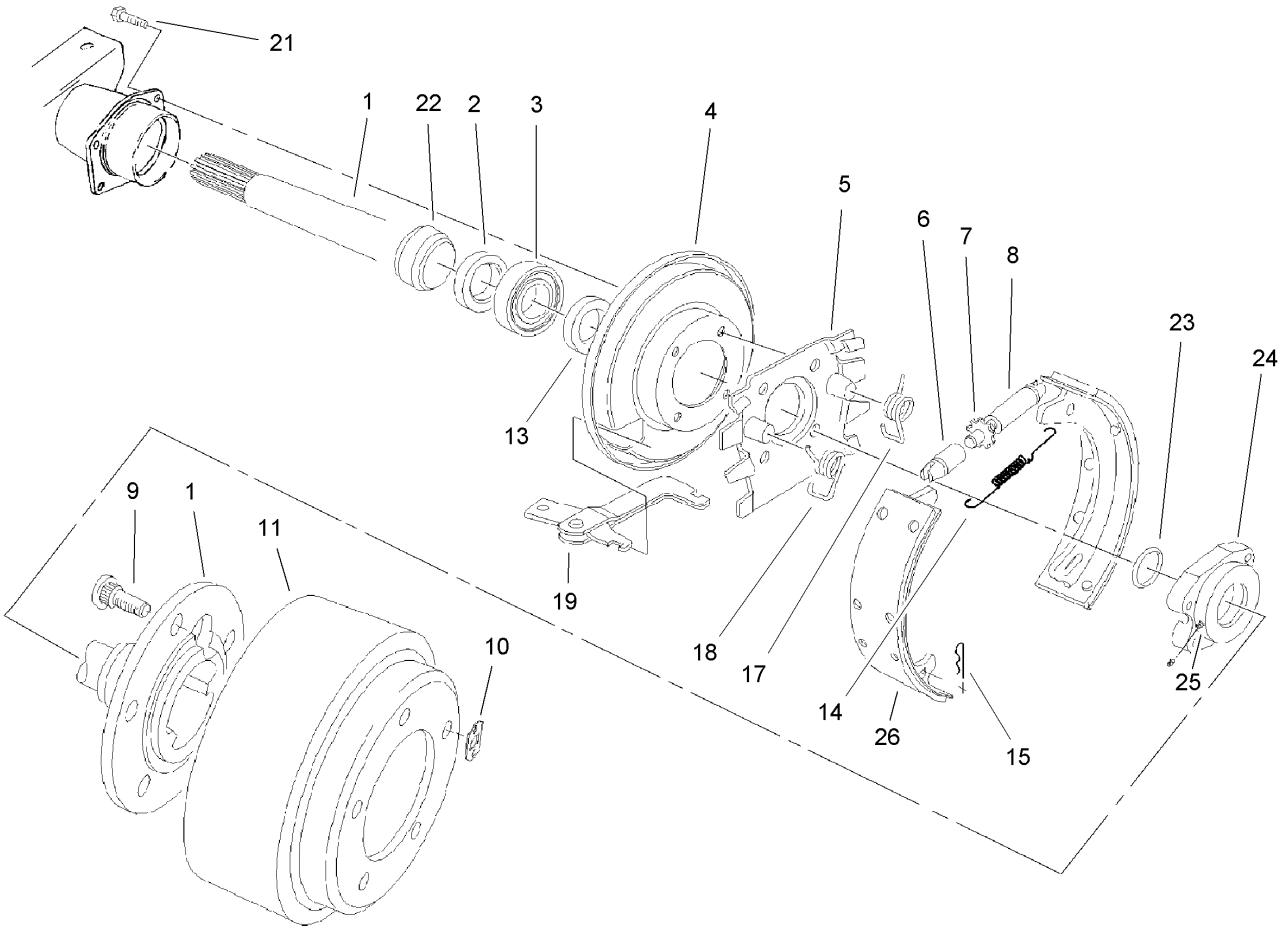

Brake Assembly

Ref	Part No.	Qty.	Description
1	108-1424	1	Shaft-Axle, LH
1	108-1425	1	Shaft-Axle, RH
2	100-3842	2	Seal-Oil
3	108-1426	2	Cap-Bearing
4	100-3843	2	Shield-Dust
5	100-3844	2	Spider-Torque
6	21-9390	2	Socket-Screw, Adjusting
7	21-9370	2	Screw-Adjusting
8	21-9380	2	Nut-Pivot
9	106-9205	10	Stud-Wheel
10	21-8360	2	Clip-Retaining
11	106-9209-03	2	Drum-Brake
13	100-3845	2	Seal-Grease
14	21-9440	2	Spring-Screw, Adjusting
15	21-9460	4	Retainer-Lever, Brake
17	21-9420	2	Spring-Return, LH
18	21-9430	2	Spring-Return, RH
19	24-9180	2	Strut And Lever ASM
21	100-3846	8	Screw-Special
22	100-3847	2	Retainer-Bearing
23	108-1427	2	Ring-Spiral
24	108-1428	2	Bearing ASM
25	100-3850	2	Zerk-Special
26	84-8600	1	Set-Shoes, Lined

Ref	Part No.	Qty.	Description
❶27	92-8775	1	Liquid Gasket Kit

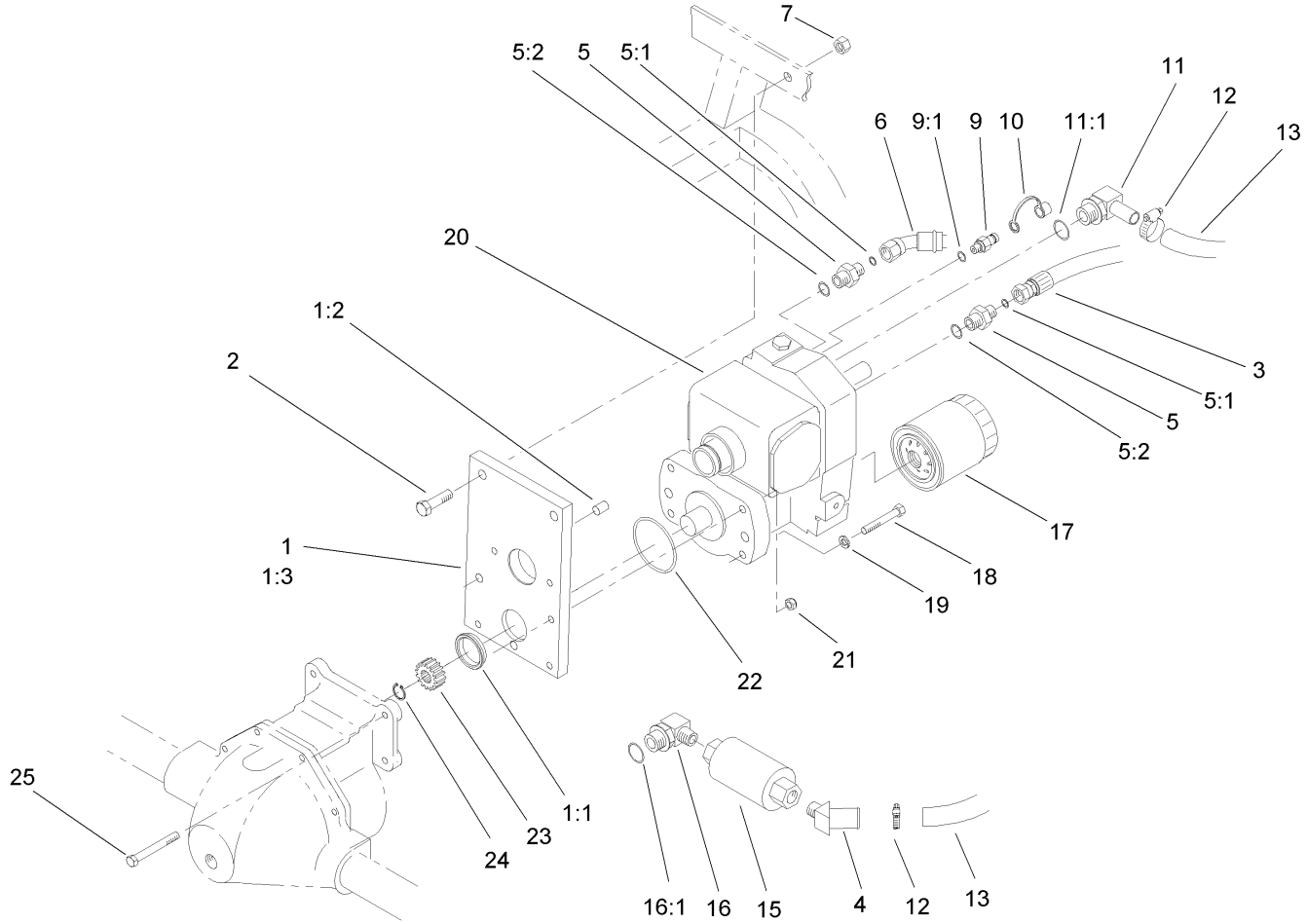

Transmission Assembly

Ref	Part No.	Qty.	Description
1	92-4846	1	Transmission Support ASM
1:1	75-3110	1	Collar-Transmission
1:2	92-4808	1	Sleeve-Transmission
1:3	92-4809	1	Support-Transmission
2	325-7	2	Screw-HH
3	93-0075	1	Hose ASM
4	354-72	1	Fitting-HYD
5	340-3	2	Adapter
5:1	237-22	1	O-Ring
5:2	237-79	1	O-Ring
6	93-0076	1	Hose ASM
7	3296-23	2	Nut-Lock, NI
9	354-77	1	Fitting-Quick
9:1	237-78	1	O-Ring
10	354-79	1	Cap-Dust
11	75-4720	1	Fitting-Line, Suction
11:1	237-81	1	O-Ring
12	2412-129	2	Clamp-Hose
13	75-6350	1	Hose
15	75-6340-03	1	Filter
16	354-75	1	Fitting-HYD, 90 DEG
16:1	237-81	1	O-Ring
17	75-1330	1	Element-Filter
18	323-12	2	Screw-HH

Ref	Part No.	Qty.	Description
19	3253-21	2	Washer-Lock
20	75-0012	1	Transmission
21	3296-39	2	Nut-Lock, NI
22	237-161	1	O-Ring
23	86-7220	1	Gear-Pinion
24	32151-62	1	Ring-Retaining
25	323-20	2	Screw-HH

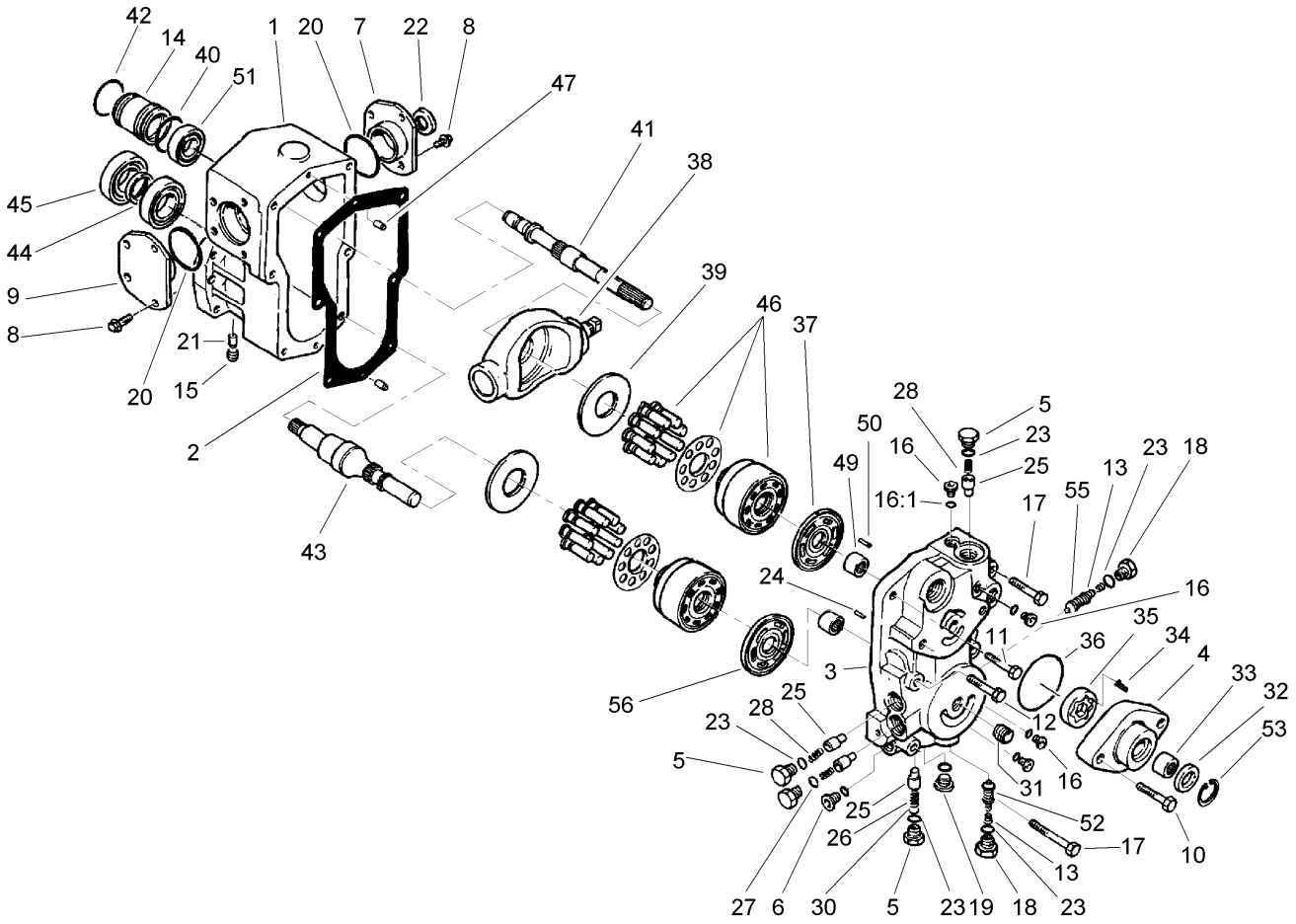

Transmission Assembly No. 75-0012

Ref	Part No.	Qty.	Description
1	75-0020	1	Housing
2	75-0030	1	Gasket-Housing
3	75-0040	1	Section-Center
4	83-4780	1	Housing-Pump, Charge
5	75-0060	4	Plug
6	75-0070	1	Plug
7	86-7520	1	RH Trunnion Cover ASM
8	75-0090	8	Capscrew-HH
9	86-7530	1	LH Trunnion Cover ASM
10	75-0110	2	Capscrew-HH
11	75-0120	1	Capscrew-HH
12	75-0130	3	Capscrew-HH
13	75-0140	2	Spring-Conical
14	75-0150	1	Guide-Seal
15	75-0160	1	Plug-Pipe
16	75-0170	4	Plug-Thread, Straight
16:1	92-8777	1	O-Ring
17	75-0180	2	Capscrew-HH
18	75-0190	2	Plug-Special
19	75-0200	2	Plug-Thread, Straight
20	75-0210	2	O-Ring
21	75-0220	2	Pin
22	75-0230	1	Seal-Lip
23	75-0240	6	O-Ring

Ref	Part No.	Qty.	Description
24	75-0250	1	Spring
25	75-0260	4	Valve-Relief
26	75-0270	1	Spring
27	75-0280	1	Spring
28	75-0290	2	Spring
30	75-0310	1	Shim
31	75-0320	1	Nipple
32	75-0330	1	Seal-Lip
33	75-0340	1	Bearing-Needle
34	75-0350	1	Pin
35	75-0360	1	Gerotor
36	75-0370	1	O-Ring
37	75-0380	1	Plate-Valve
38	75-0390	1	Plate-Swash
39	75-0400	2	Plate-Thrust
40	75-0410	1	O-Ring
41	86-7540	1	Shaft-Pump
42	75-0430	1	Ring-Retaining
43	75-0440	1	Shaft-Motor
44	75-0450	1	Collar
45	75-0460	2	Bearing-Ball
46	75-0470	2	Cylinder Block Kit
47	75-0480	2	Pin
49	75-0500	2	Bearing-Needle

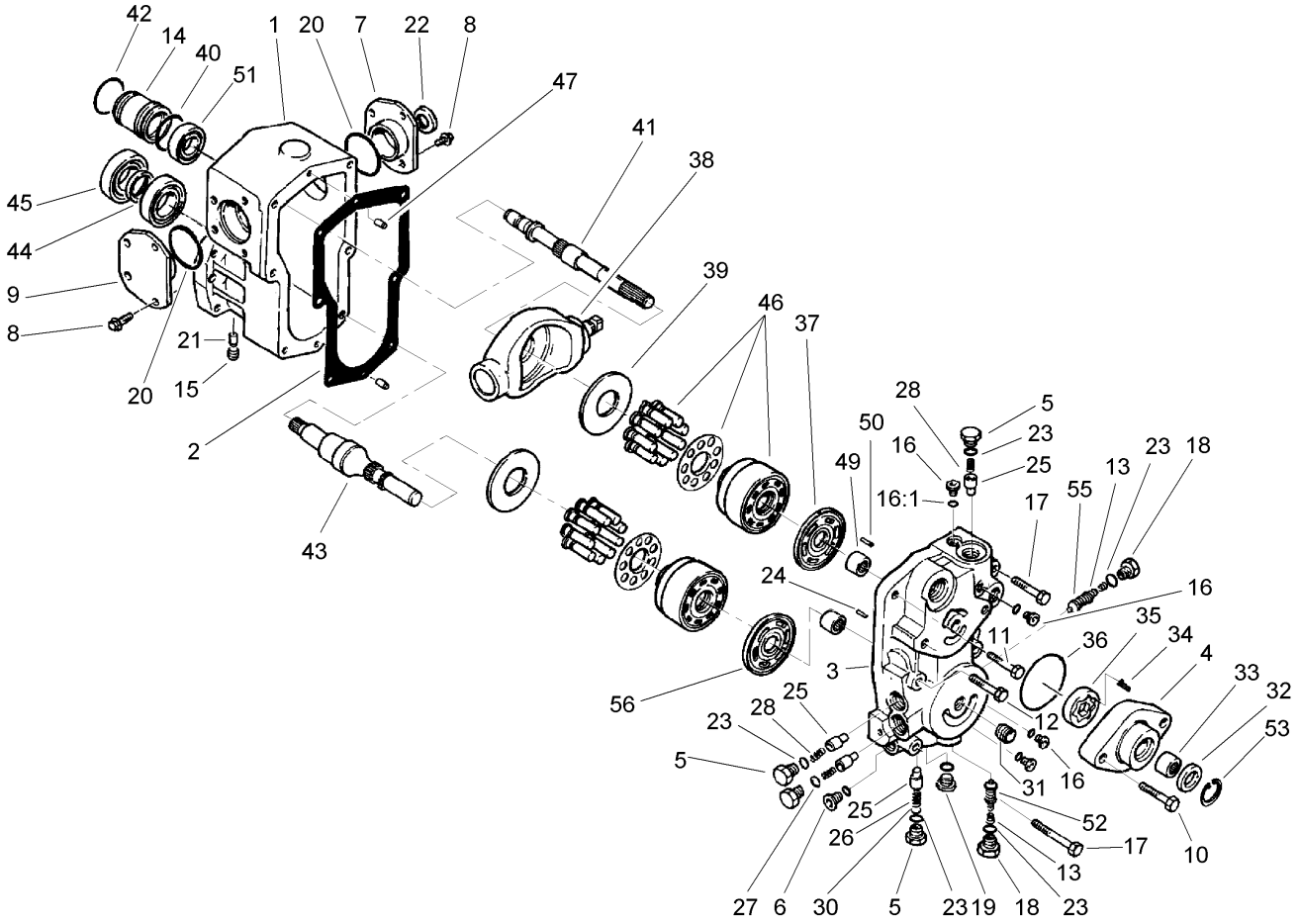

Transmission Assembly No. 75-0012 (continued)

Ref	Part No.	Qty.	Description
50	75-0510	1	Pin
51	75-0520	1	Bearing-Ball
52	75-6930	1	Valve-Screw
53	32120-74	1	Ring-Snap
55	93-0097	1	Valve-Screw
56	93-0083	1	Plate-Valve

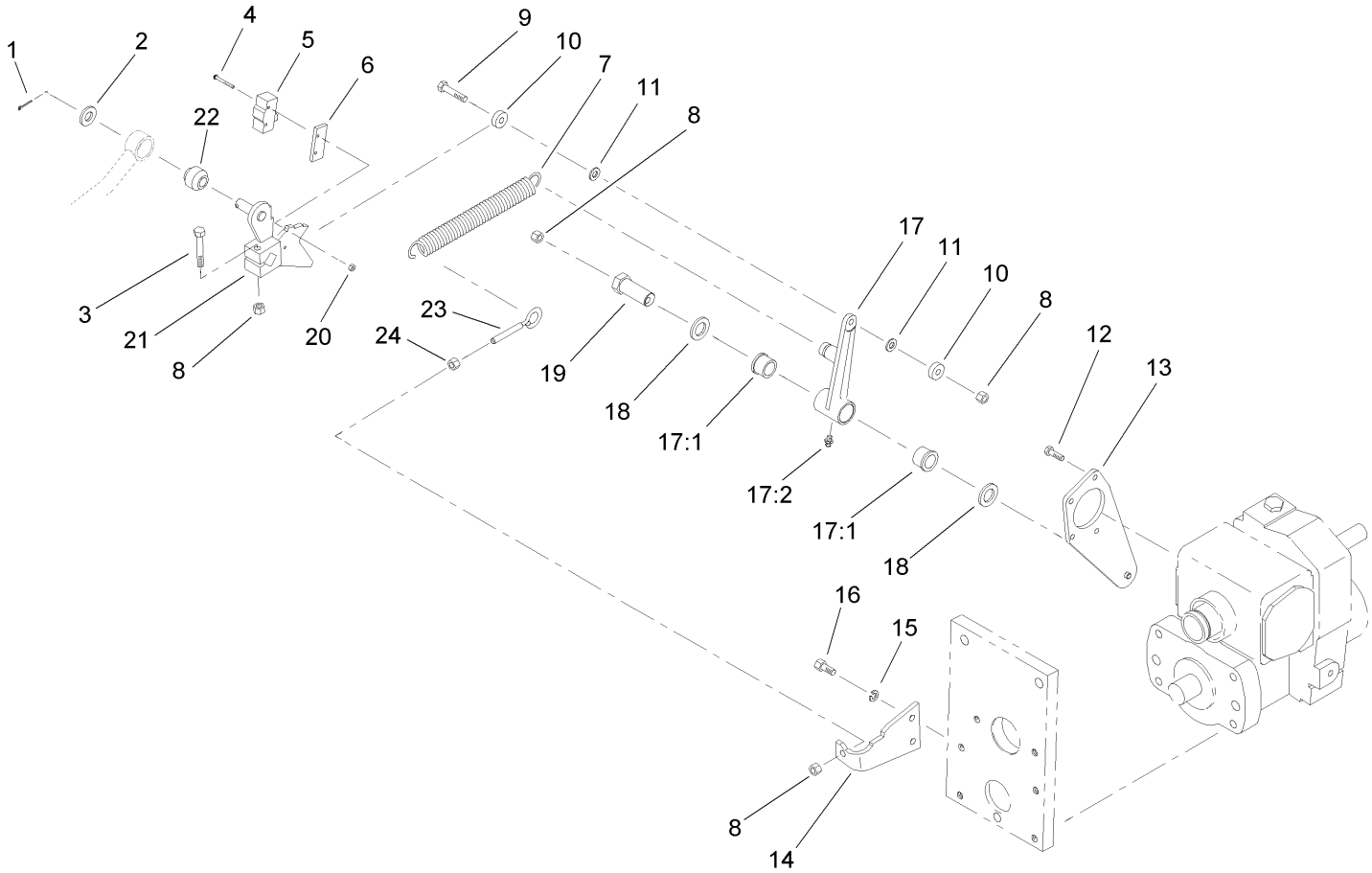

Traction Control Assembly

Ref	Part No.	Qty.	Description
1	3272-10	1	Pin-Cotter
2	3256-26	1	Washer-Flat
3	322-10	1	Screw-HH
4	32105-21	2	Screw-HH
5	29-6162	1	Switch-Micro
6	75-4130	1	Plate-Switch
7	76-9430-03	1	Spring-Extention
8	3296-29	4	Nut-Lock, NI
9	322-7	1	Screw-HH
10	251-307	2	Bearing-Ball
11	75-5470	2	Spacer-Bearing
12	321-5	4	Screw-HH
13	104-1480-03	1	Traction Plate ASM
14	85-9900-03	1	Plate-Anchor, Spring
15	3253-4	2	Washer-Lock
16	322-3	2	Screw-HH
17	92-2581	1	Neutral Switch Arm ASM
17:1	256-113	2	Bushing-Flange
17:2	302-5	1	Fitting-Grease
18	3-6498	2	Washer-Thrust
19	76-8640	1	Stud-Traction
20	3296-9	2	Nut-Lock
21	75-4100-03	1	Control-Pump
22	23-2270	1	Bushing-Rubber

Ref	Part No.	Qty.	Description
23	85-9910	1	Eyebolt
24	3217-6	1	Nut-Hex

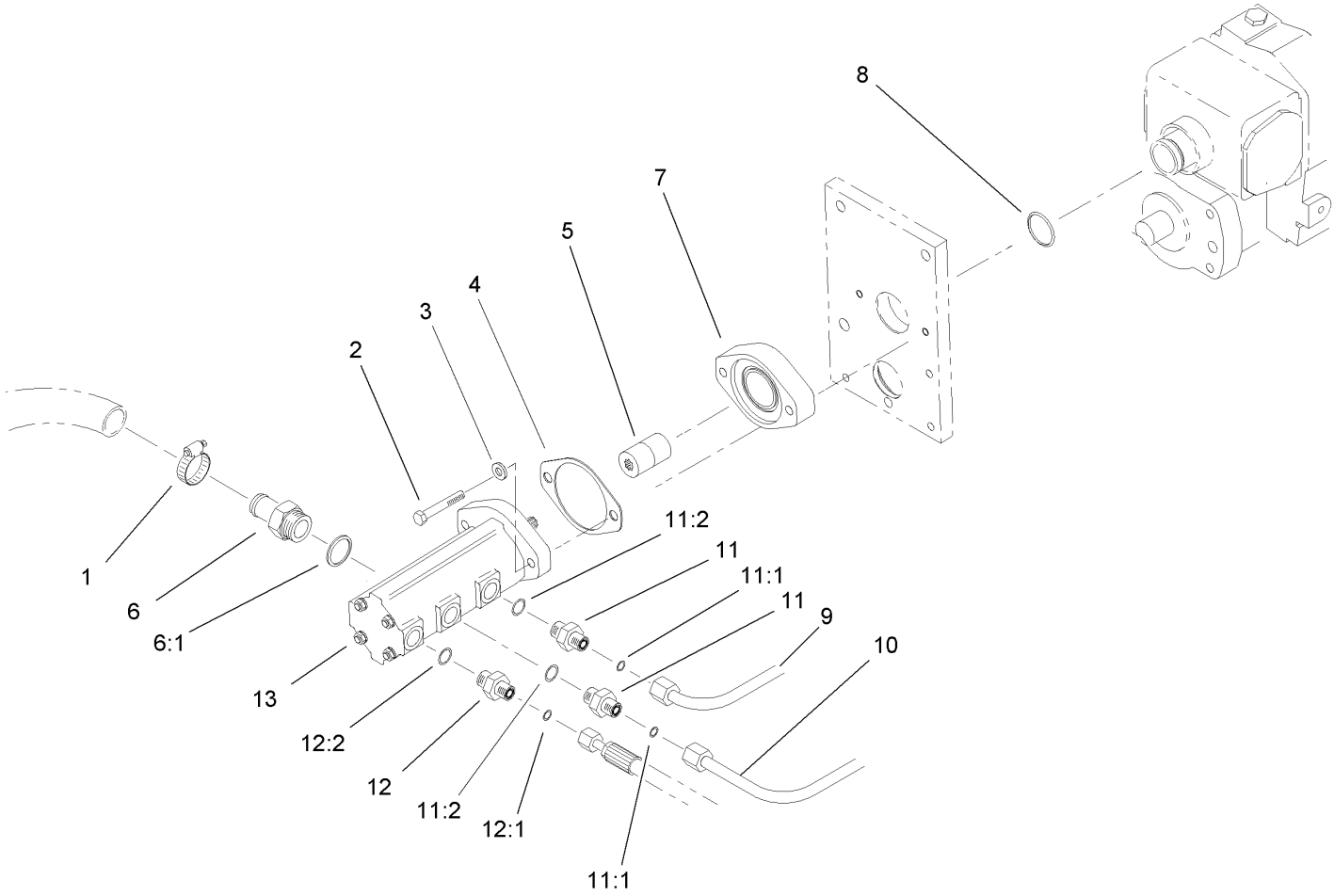

Gear Pump Installation Assembly

Ref	Part No.	Qty.	Description
1	2412-34	1	Clamp-Hose
2	92-4037	2	Capscrew-HSH
3	3256-24	2	Washer-Flat
4	93-3604	1	Gasket
5	93-1396	1	Coupler
6	354-78	1	Connector-Hose
6:1	237-146	1	O-Ring
7	75-4400-03	1	Adaptor
8	237-163	1	O-Ring
9	93-3642	1	Tube-Pump, Port 1
10	93-3643	1	Tube-Pump, Port 2
11	340-4	2	Fitting-HYD, Straight
11:1	237-30	1	O-Ring
11:2	237-79	1	O-Ring
12	340-3	1	Adapter
12:1	237-22	1	O-Ring
12:2	237-79	1	O-Ring
13	107-2380	1	Pump-Gear

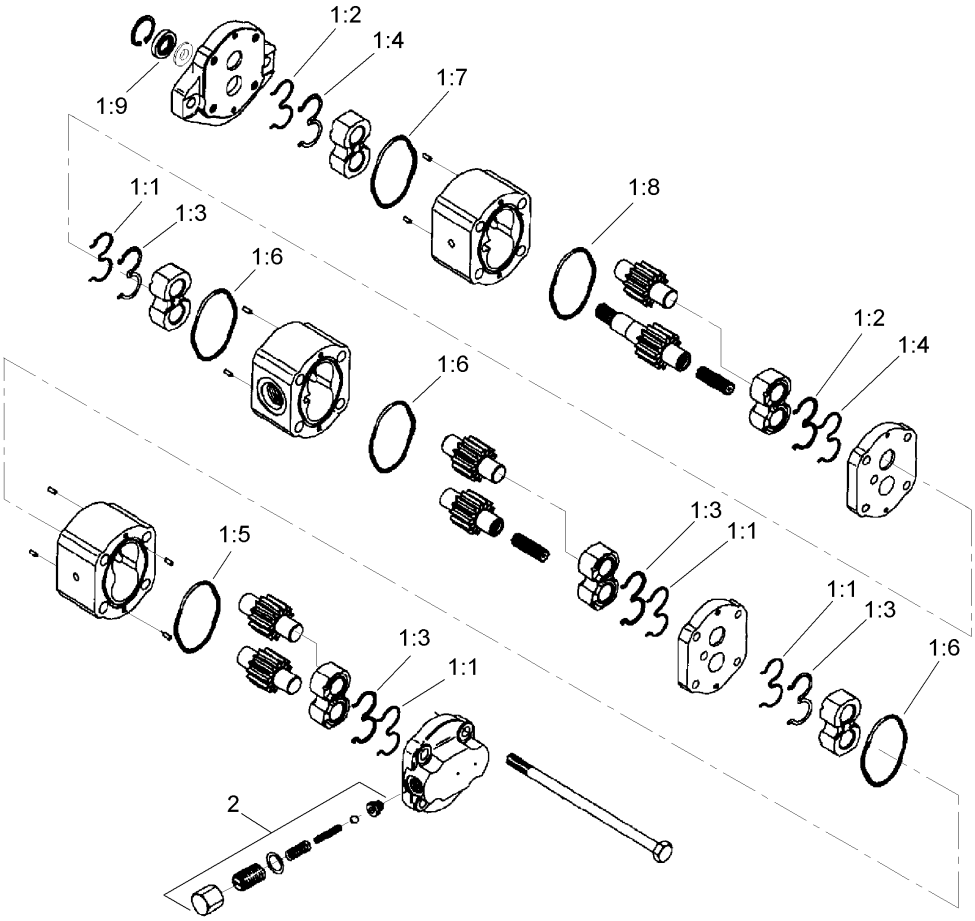

Gear Pump Assembly No. 107-2380

Ref	Part No.	Qty.	Description
1	104-0576	1	Seal Kit
❷1:1		4	Seal-Extrusion, Anti
❷1:2		2	Seal-Extrusion, Anti
❷1:3		4	Seal-Loading, Pressure
❷1:4		2	Seal-Loading, Pressure
❷1:5		1	Seal-Dust
❷1:6		3	Seal-Dust
❷1:7		1	Seal-Dust
❷1:8		1	Seal-Dust
❷1:9		1	Seal-Shaft
2	104-0577	1	Cover / Relief Valve ASM

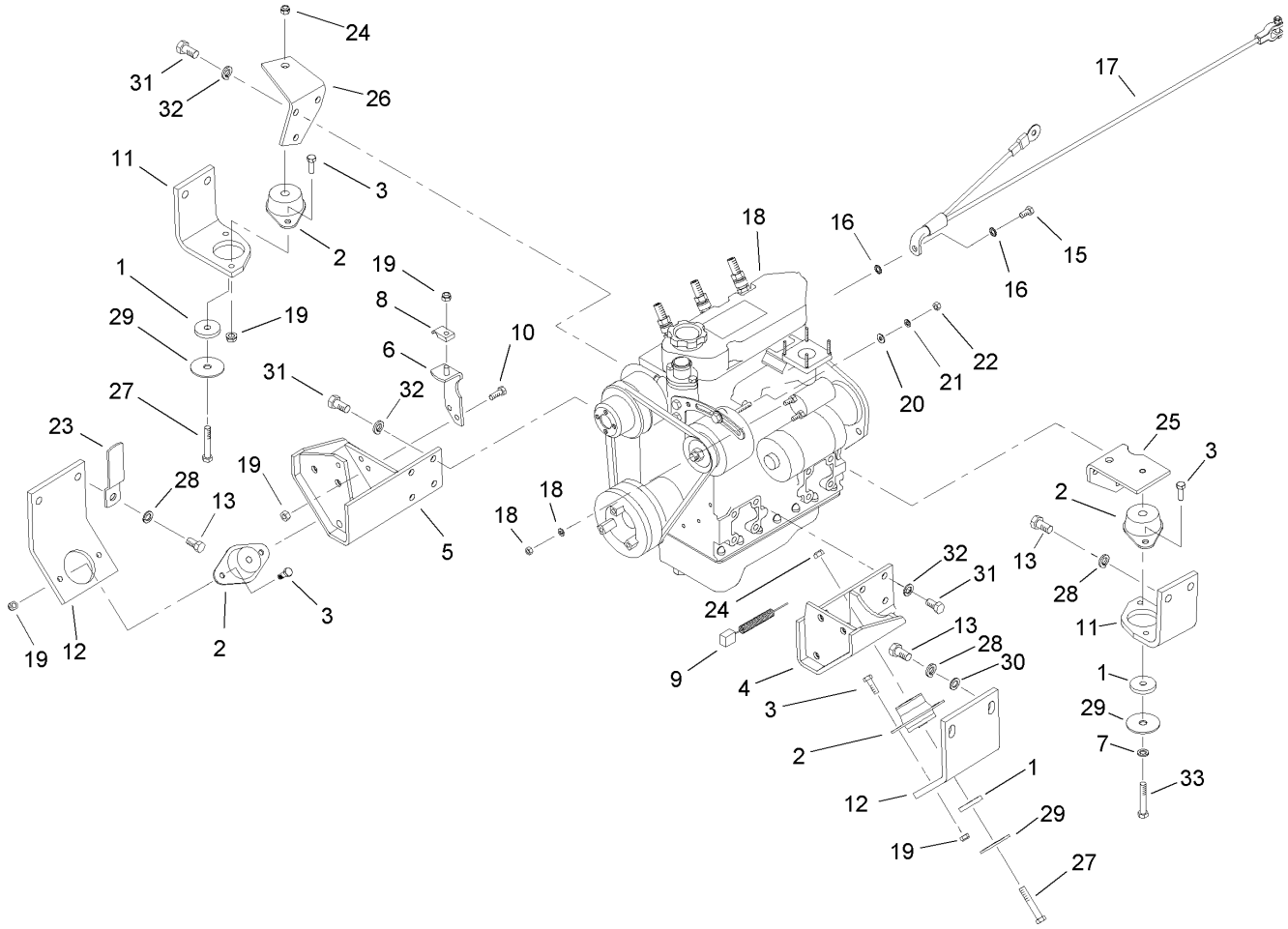

Engine Installation Assembly

Ref	Part No.	Qty.	Description
1	83-1050	4	Spacer
2	83-1030	4	Mount-Engine
3	322-5	8	Screw-HH
4	98-4539-03	1	Bracket-Engine Mount, LH
5	98-4543-03	1	Bracket-Engine Mount, RH
6	98-9749	1	Plate-Throttle
7	3253-21	1	Washer-Lock
8	3-6657	1	Clip-Skid
9	99-3441	1	Harness-Wire, Fusible Link
10	322-4	2	Screw-HH
11	98-4513-03	2	Bracket-Engine, Rear
12	93-0095-03	2	Bracket-Engine, Front
13	3213-2	8	Screw-HH
15	98-9322	1	Screw-HSH
16	3255-9	2	Washer-Lock
17	98-4598	1	Cable-Battery, Negative
18	108-4420	1	Engine-Kubota
19	3296-29	11	Nut-Lock, NI
20	3256-78	1	Washer-Flat
21	43-5930	1	Washer-Spring
22	48-7890	1	Nut
23	98-4594	1	Clamp-Retainer
24	32128-36	3	Nut-HF
25	98-4515-03	1	Bracket-Rear Engine, LH

Ref	Part No.	Qty.	Description
26	98-4514-03	1	Bracket-Rear Engine, RH
27	323-12	3	Screw-HH
28	3253-7	8	Washer-Lock
29	87-5100	4	Washer-Snubbing
30	3256-40	4	Washer-Flat
31	43-0090	14	Screw-HH
32	42-9600	14	Washer-Lock, Spring
33	323-10	1	Screw-HH

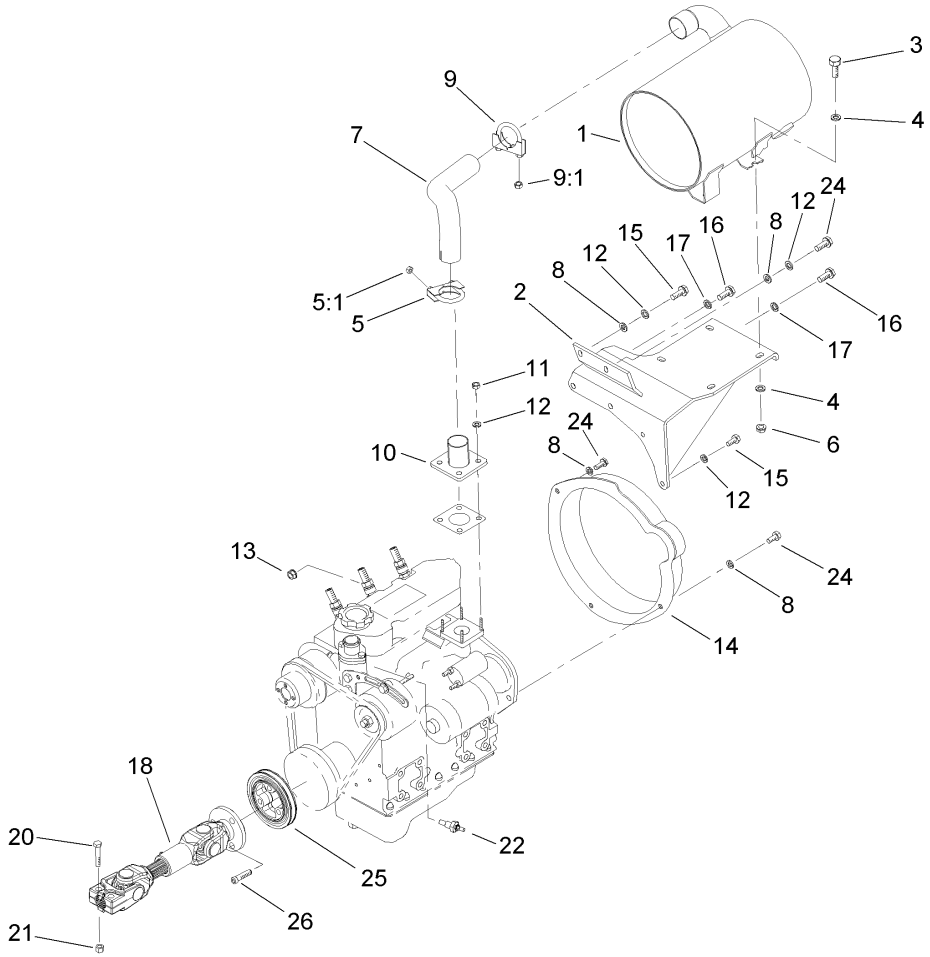

Muffler and Pump Drive Assembly

Ref	Part No.	Qty.	Description
1	107-2379	1	Muffler-Exhaust
2	98-4555-03	1	Muffler Bracket ASM
3	323-7	4	Screw-HH
4	3256-4	8	Washer-Flat
5	2112-9	1	Clamp
5:1	32128-20	2	Nut-HF
6	3296-39	4	Nut-Lock, NI
7	98-4524	1	Tube-Exhaust
8	3256-23	5	Washer-Flat
9	2112-6	1	Clamp-Muffler
9:1	3218-2	2	Nut-Jam
10	98-4527	1	Pipe-Exhaust, Engine
11	33014-00	4	Nut-Hex
12	42-9850	7	Washer-Lock, Spring
13	33024-00	1	Nut-Lock
14	105-7505	1	Guard-Flywheel
15	33114-025	3	Screw-HH
16	43-0090	2	Screw-HH
17	42-9600	2	Washer-Lock, Spring
18	106-7751	1	Driveshaft ASM
20	322-9	2	Screw-HH
21	3296-29	2	Nut-Lock, NI
22	98-9346	1	Sender-Temperature
24	33114-020	4	Screw-HH

Ref	Part No.	Qty.	Description
25	106-7756	1	Pulley
26	3274-106	3	Screw-HSH

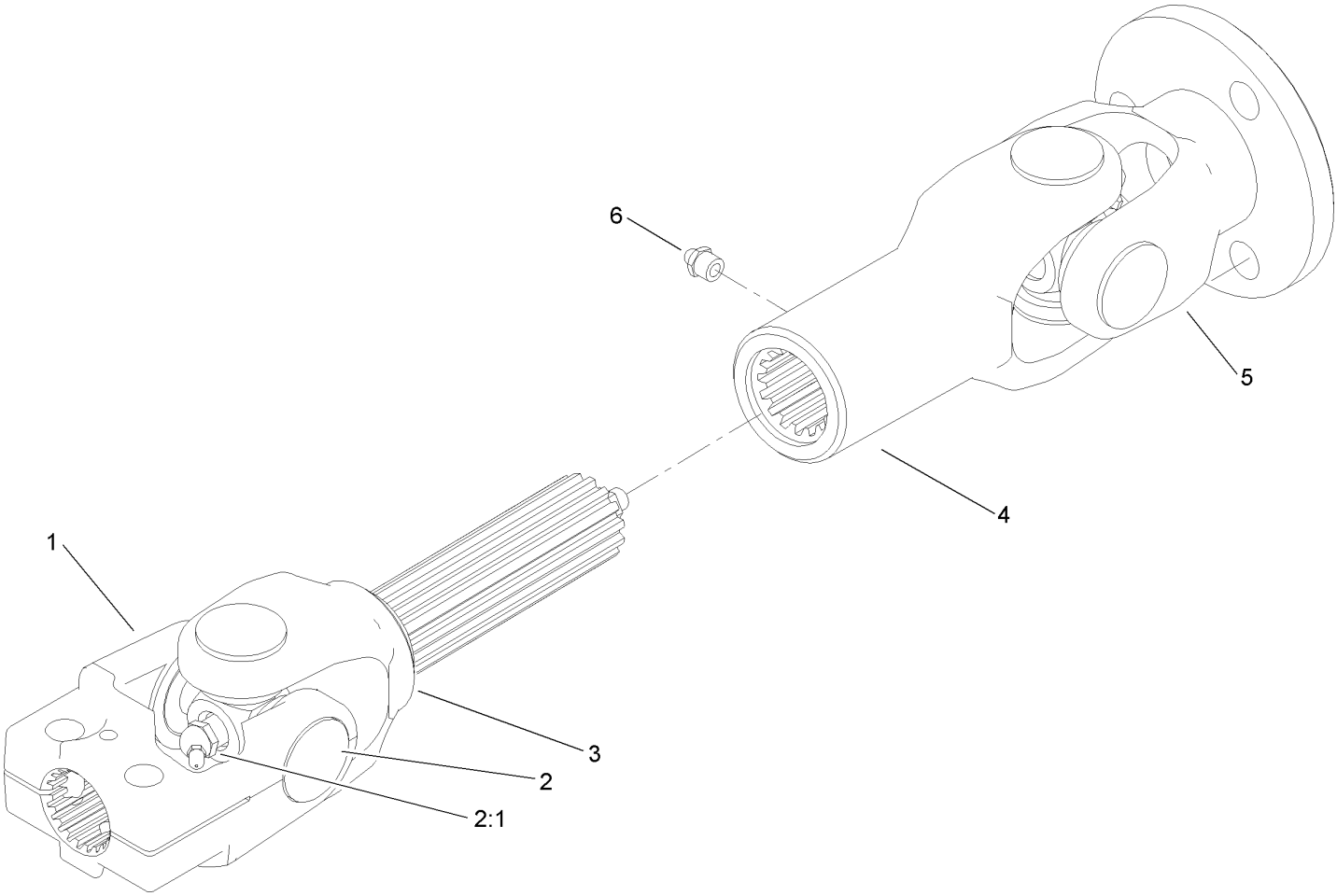

Driveshaft Assembly No. 106-7751

Ref	Part No.	Qty.	Description
1	54-9040	1	Yoke-End
2	54-9180	1	U-Joint Kit
2:1	62-3820	1	Fitting-Grease
3	108-0632	1	Yoke And Shaft ASM
4	108-0633	1	Yoke-Telescoping
5	108-0644	1	Yoke
6	302-5	1	Fitting-Grease

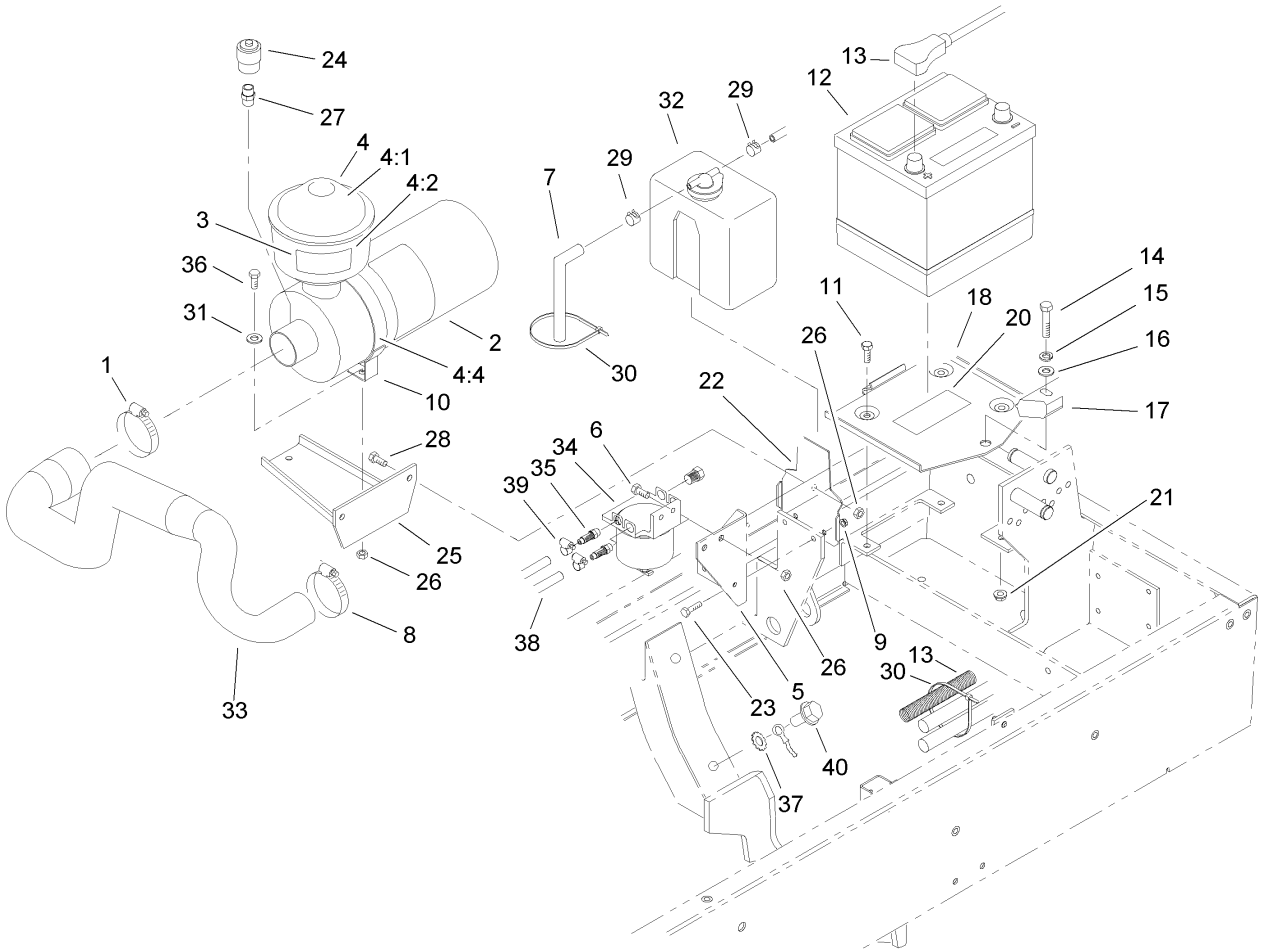

Engine Component Assembly

Ref	Part No.	Qty.	Description
1	2412-42	1	Clamp-Hose
2	98-4517	1	Air Cleaner ASM
3	93-6692	1	Decal-Fluid, Starting
4	48-7430	1	Precleaner
4:1	33-1260	1	Cover ASM
4:2	33-1270	1	Bowl-Clear
❶4:3	62-6300	1	Sleeve ASM
4:4	94-6873	1	Clamp
5	98-4578-03	1	Bracket-Filter, Fuel
6	3234-29	2	Screw-HHF
7	63-7630	1	Hose-Fuel
8	2412-92	1	Clamp-Hose
9	32128-33	2	Nut-HF
10	98-4525	1	Bracket-Cleaner, Air
11	322-4	3	Screw-HH
12	106-5187	1	Battery
13	104-0086	1	Cable-Battery, Positive
14	323-9	1	Screw-HH
15	3253-21	1	Washer-Lock
16	3256-24	1	Washer-Flat
17	66-2490	1	Retainer-Battery
18	94-7343	1	Battery Base ASM
20	93-7276	1	Decal-Danger
21	32128-20	1	Nut-HF

Ref	Part No.	Qty.	Description
22	98-4576-03	1	Bracket-Reservoir, Water
23	321-5	2	Screw-HH
24	93-9164	1	Indicator-Mini
25	98-4518-03	1	Bracket-Cleaner, Air
26	3296-29	6	Nut-Lock, NI
27	94-1416	1	Indicator Adapter ASM
28	322-5	2	Screw-HH
29	92-2379	2	Clamp-Hose
30	3290-378	2	Tie-Cable
31	3256-23	2	Washer-Flat
32	104-9318	1	Bottle-Overflow
33	98-4509	1	Hose-Cleaner, Air
34	98-9305	1	Water / Fuel Filter ASM
35	353-783	2	Fitting-Straight
36	322-6	2	Screw-HH
37	3255-8	1	Washer-Lock
38	27-5360	1	Hose-Fuel
39	2412-108	3	Clamp-Worm
40	32144-14	1	Screw-HWHTF
99	3290-379	1	Tie-Cable

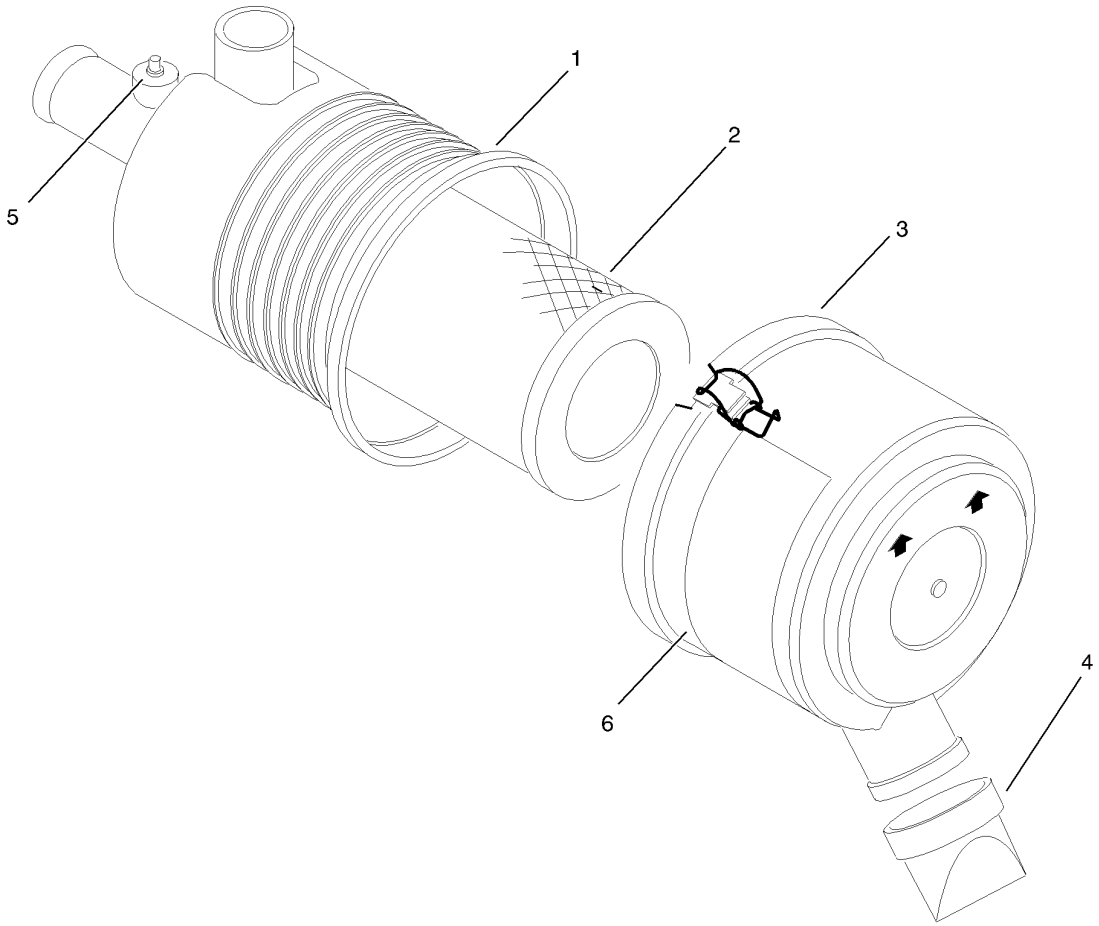

Air Cleaner Assembly No. 98-4517

Ref	Part No.	Qty.	Description
❷1		1	Body ASM
2	108-3810	1	Filter-Air
3	98-9771	1	Cover ASM
4	87-9400	1	Valve-Vacuator
❷5		1	Plug
6	98-9788	1	Decal-Instruction

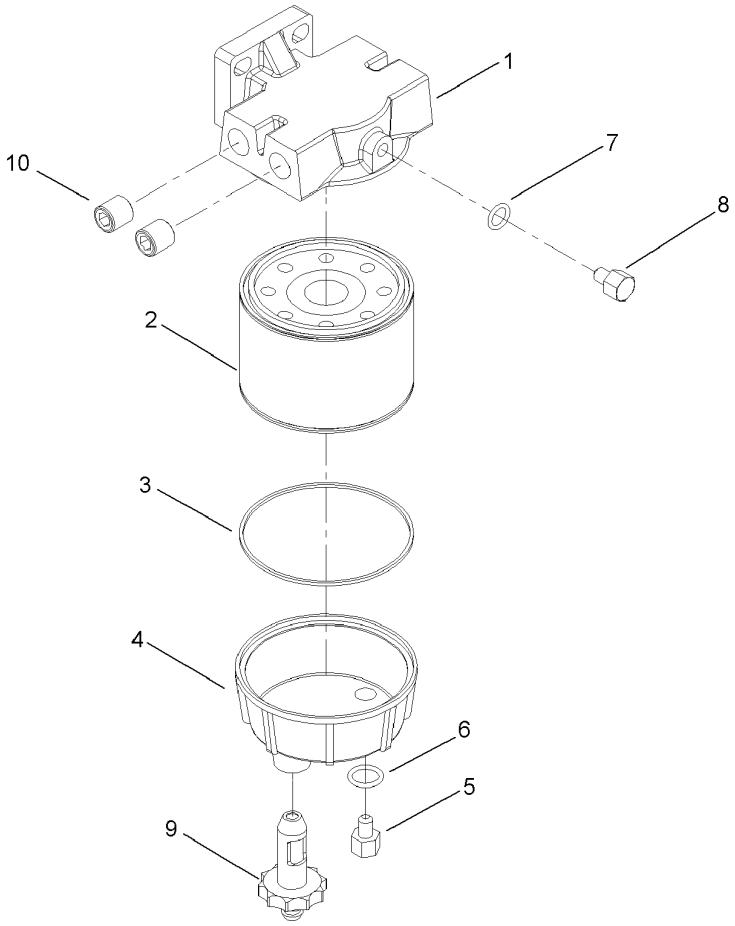

Water / Fuel Filter Assembly No. 98-9305

Ref	Part No.	Qty.	Description
1	98-9772	1	Head-Filter
2	98-9764	1	Element
3	98-9774	1	O-Ring
4	98-9775	1	Base-Filter
5	98-9773	1	Plug-Base, Filter
6	237-42	1	O-Ring
7	237-78	1	O-Ring
8	98-9776	1	Plug-Head, Filter
9	98-9777	1	Drain Valve ASM
10	285-22	2	Plug-Pipe

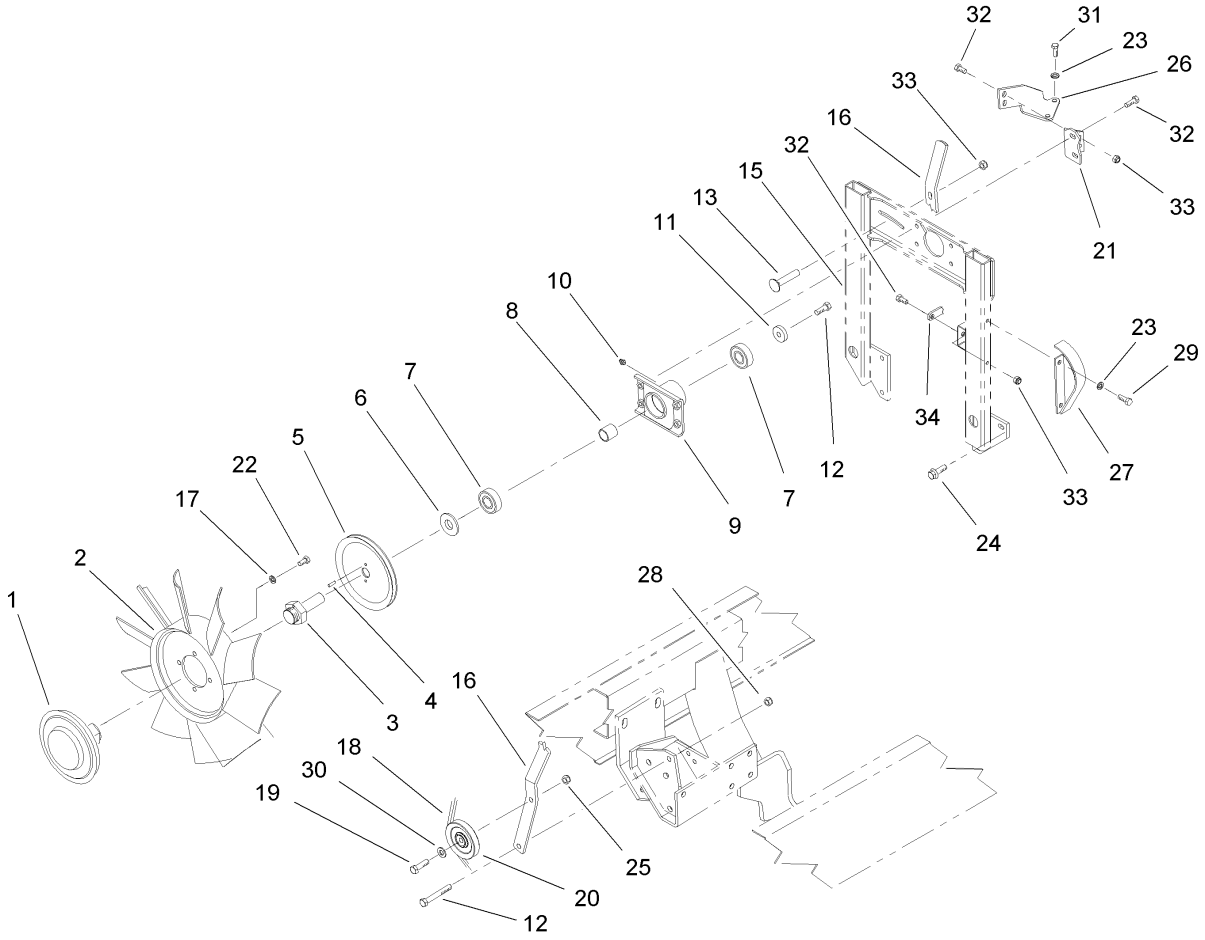

Fan Drive Assembly

Ref	Part No.	Qty.	Description
1	74-5520	1	Clutch-Fan
2	75-3780	1	Fan-Engine
3	75-6380	1	Shaft-Fan
4	104-9312	2	Pin-Grooved
5	98-9743	1	Pulley-Drive, Fan
6	104-9259	1	Washer-Thrust
7	251-318	2	Bearing-Ball
8	104-0001	1	Spacer
9	75-4450	1	Hub
10	302-2	1	Fitting-Grease
11	67-1630	1	Spacer
12	323-6	2	Screw-HH
13	3230-2	1	Bolt-CARR
15	98-4530-03	1	Support-Fan
16	98-4575-03	1	Lever-Idler, Fan
17	3253-4	4	Washer-Lock
18	98-9744	1	Belt-Fan
19	323-8	1	Screw-HH
20	63-8140	1	Pulley-Idler
21	98-9740	1	Bracket-Fan, Support
22	322-2	4	Screw-HH
23	42-9850	4	Washer-Lock, Spring
24	3234-29	6	Screw-HHF
25	3296-59	1	Nut-Lock, NI

Ref	Part No.	Qty.	Description
26	98-9741	1	Bracket-Mount, Fan
27	98-4561-03	1	Shield-Alternator
28	3296-39	1	Nut-Lock, NI
29	32144-14	2	Screw-HWHTF
30	80-6990	1	Washer-Hardened
31	110-0032	2	Screw-Button Head
32	3234-4	7	Screw-HHF
33	104-8300	4	Nut-Flange, NI
34	98-4547	1	Plate-Mount, Fan

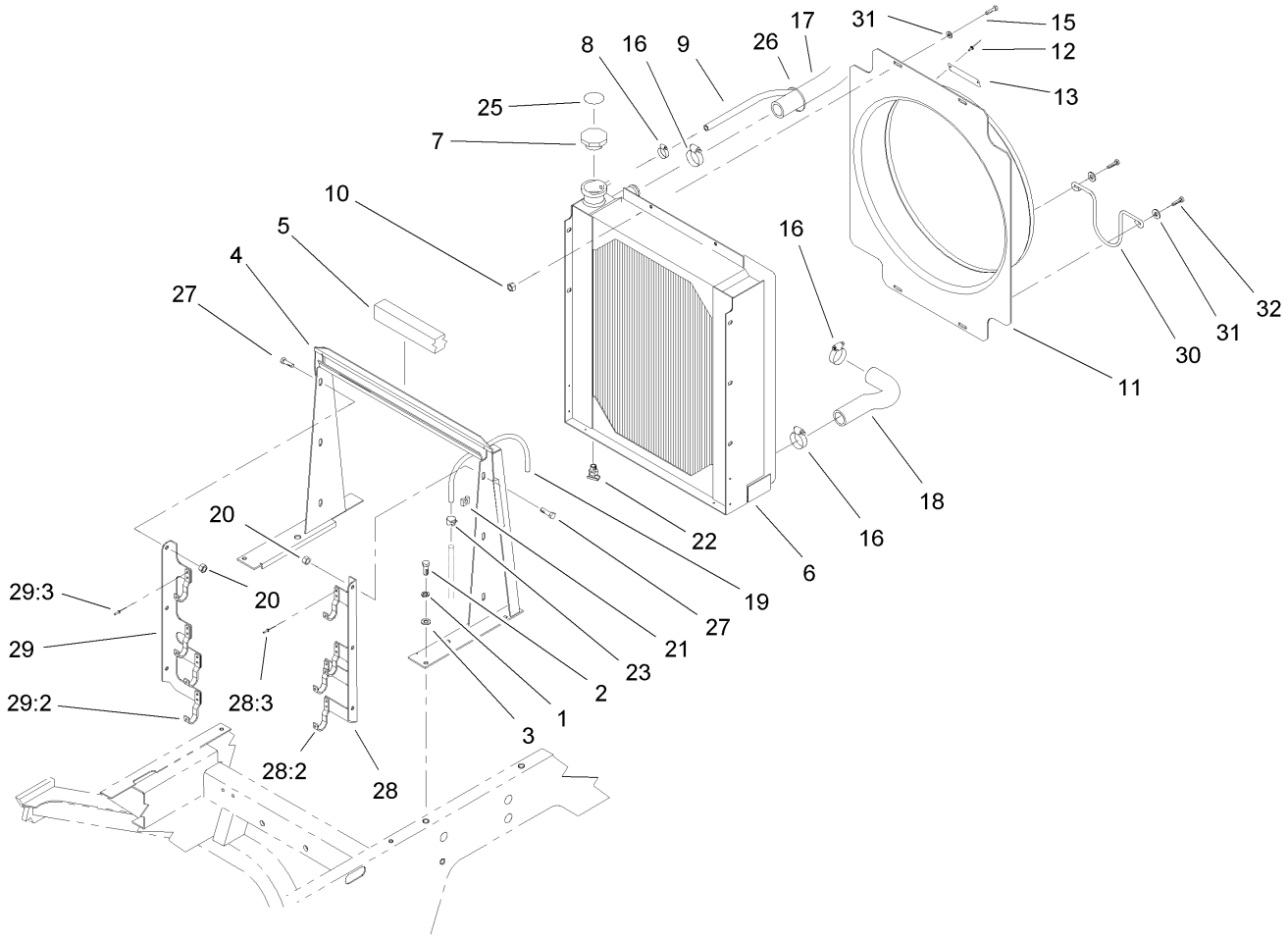

Radiator Assembly

Ref	Part No.	Qty.	Description
1	3253-4	4	Washer-Lock
2	322-5	4	Screw-HH
3	3256-23	4	Washer-Flat
4	98-9317-03	1	Support-Radiator
5	93-0005	1	Strip-Foam, Radiator Top
6	98-4507	1	Radiator
7	66-3240	1	Cap-Radiator
8	92-2379	1	Clamp-Hose
9	75-2851	1	Hose-Fuel
10	104-8300	4	Nut-Flange, NI
11	98-4571	1	Shroud-Fan
12	3290-55	2	Rivet-Pop
13	98-9335	1	Plate-Warning, Fan
15	321-4	2	Screw-HH
16	2412-34	4	Clamp-Hose
17	98-4511	1	Hose-Radiator, Upper
18	98-4508	1	Hose-Radiator, Lower
19	66-3180	1	Tube-Vent
20	32128-20	6	Nut-HF
21	2412-103	1	Clamp
22	304-46	1	Draincock
23	2412-98	1	Clamp
25	106-5976	1	Decal-Warning
26	3290-379	1	Tie-Cable

Ref	Part No.	Qty.	Description
27	3234-5	6	Screw-HHF
28	99-6991	1	LH Cooler Mount ASM
28:2	75-0930	4	Hook-Mount, Cooler
28:3	3269-15	8	Rivet
29	99-6994	1	RH Cooler Mount ASM
29:2	75-0930	4	Hook-Mount, Cooler
29:3	3269-15	8	Rivet
30	104-1448	1	Hoop-Driveline
31	3256-55	4	Washer-Flat
32	321-6	2	Screw-HH

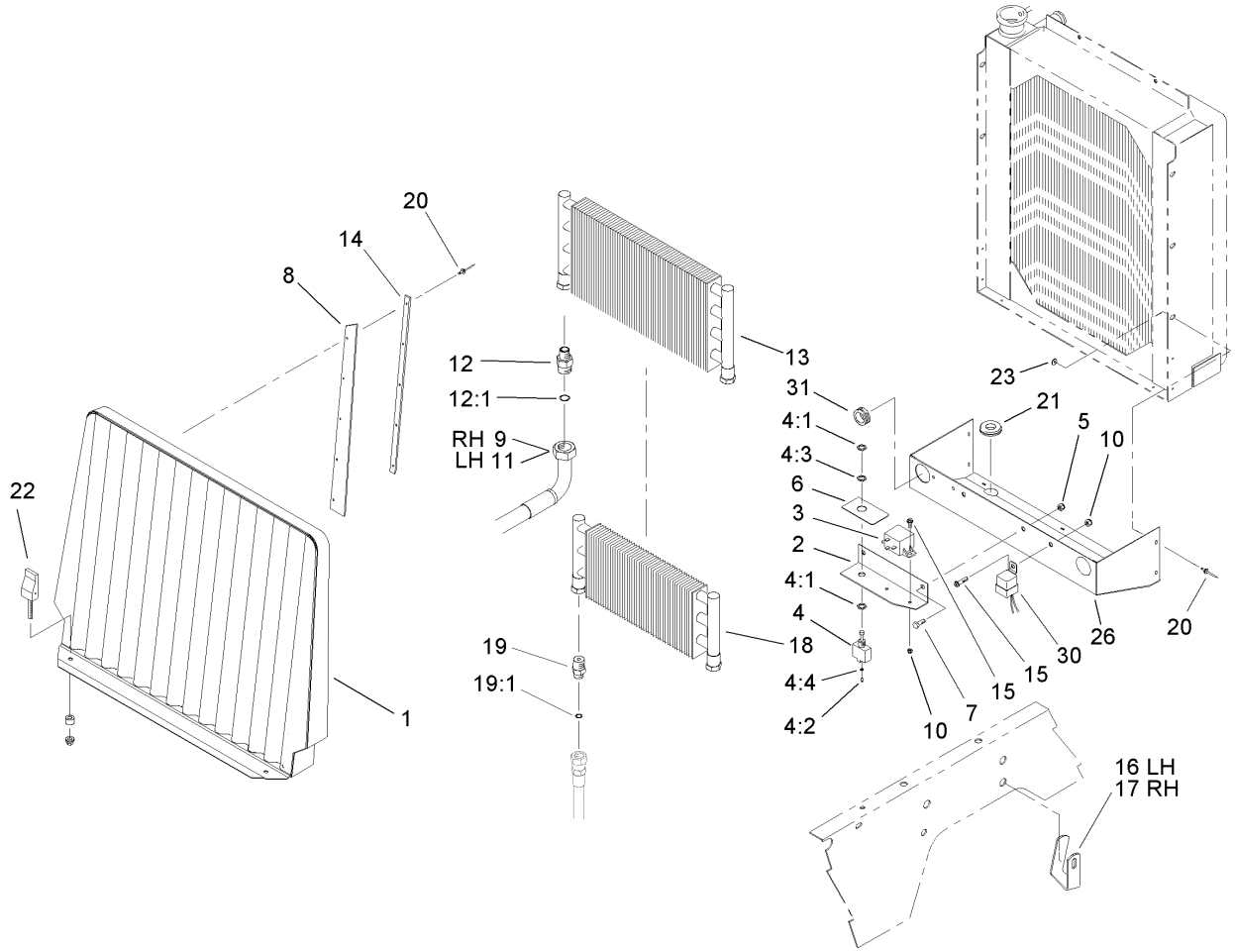

Oil Cooler and Radiator Assembly

Ref	Part No.	Qty.	Description
1	93-0032-03	1	Housing-Screen, Front
2	75-3390-03	1	Bracket-Backlap
3	66-8800	1	Relay
4	99-8352	1	Switch-Backlap, Master
4:1	218-498	2	Locknut
4:2	218-588	3	Screw
4:3	218-589	1	Washer
4:4	3253-19	3	Washer-Lock
5	3296-29	2	Nut-Lock, NI
6	93-6684	1	Decal-Backlap
7	322-2	2	Screw-HH
8	93-3623	2	Strip-Sealing, Radiator
9	93-0077	1	Hose ASM
10	3296-42	3	Nut-Lock, NI
11	93-0078	1	Hose ASM
12	92-4999	2	Fitting
12:1	237-65	1	O-Ring
13	75-1040	1	Cooler-Oil
14	93-3624-03	2	Plate-Retaining
15	321-4	3	Screw-HH
16	108-1432	1	Clamp-Hose, LH
17	108-1433	1	Clamp-Hose, RH
18	24-0760	1	Cooler ASM
19	340-124	2	Adapter

Ref	Part No.	Qty.	Description
19:1	237-22	1	O-Ring
20	3269-13	15	Rivet-Pop
21	100-3815	2	Grommet-Rubber
22	93-1374	2	Latch-Swell
23	3269-10	5	Washer-Back
26	104-9257-03	1	Shield-Radiator
30	70-1480	1	Relay
31	240-3	2	Grommet-Rubber

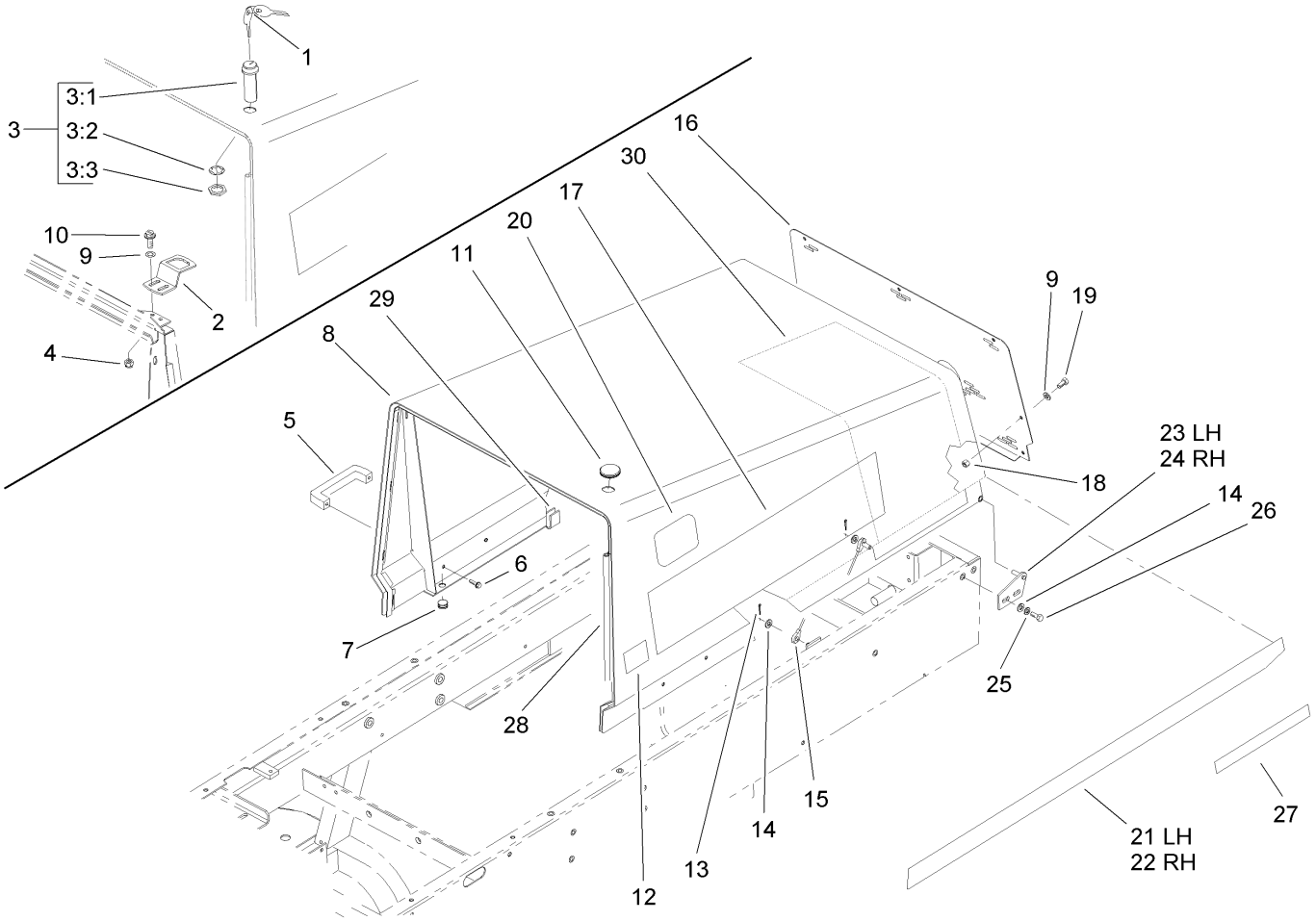

Hood Assembly

Ref	Part No.	Qty.	Description
1	98-9321	1	Ring-Key
2	98-9316	1	Latch-Hood
3	98-9315	1	Latch-Locking
3:1	99-8350	2	Key-Latch, Locking
❷3:2		1	Washer-Switch
❷3:3		1	Nut-Switch
4	3296-16	2	Nut-Lock, NI
5	65-5100	2	Handle-Door
6	46-8091	4	Screw-HWH
7	237-141	2	Grommet-Rubber
8	98-9746	1	Hood ASM
9	3256-1	9	Washer-Flat
10	321-4	2	Screw-HH
11	98-9314	1	Grommet
12	93-7252	1	Decal
13	3272-4	2	Pin-Cotter
14	3256-23	6	Washer-Flat
15	75-0570	1	Cable-Hood
16	98-4573-03	1	Screen-Hood, Rear
17	106-7062	2	Decal
18	3296-42	7	Nut-Lock, NI
19	321-39	7	Screw-HH
20	66-6140	2	Decal
21	92-5751	1	Decal-Hood, LH

Ref	Part No.	Qty.	Description
22	92-5752	1	Decal-Hood, RH
23	63-6900-01	1	LH Hood Hinge Plate ASM
24	63-6890-01	1	RH Hood Hinge Plate ASM
25	3253-4	4	Washer-Lock
26	322-5	4	Screw-HH
27	72-3560	1	Decal
28	93-0081	1	Strip-Seal
29	99-8975	1	Strip-Seal
30	107-8819	1	Tape-Foil, Hood

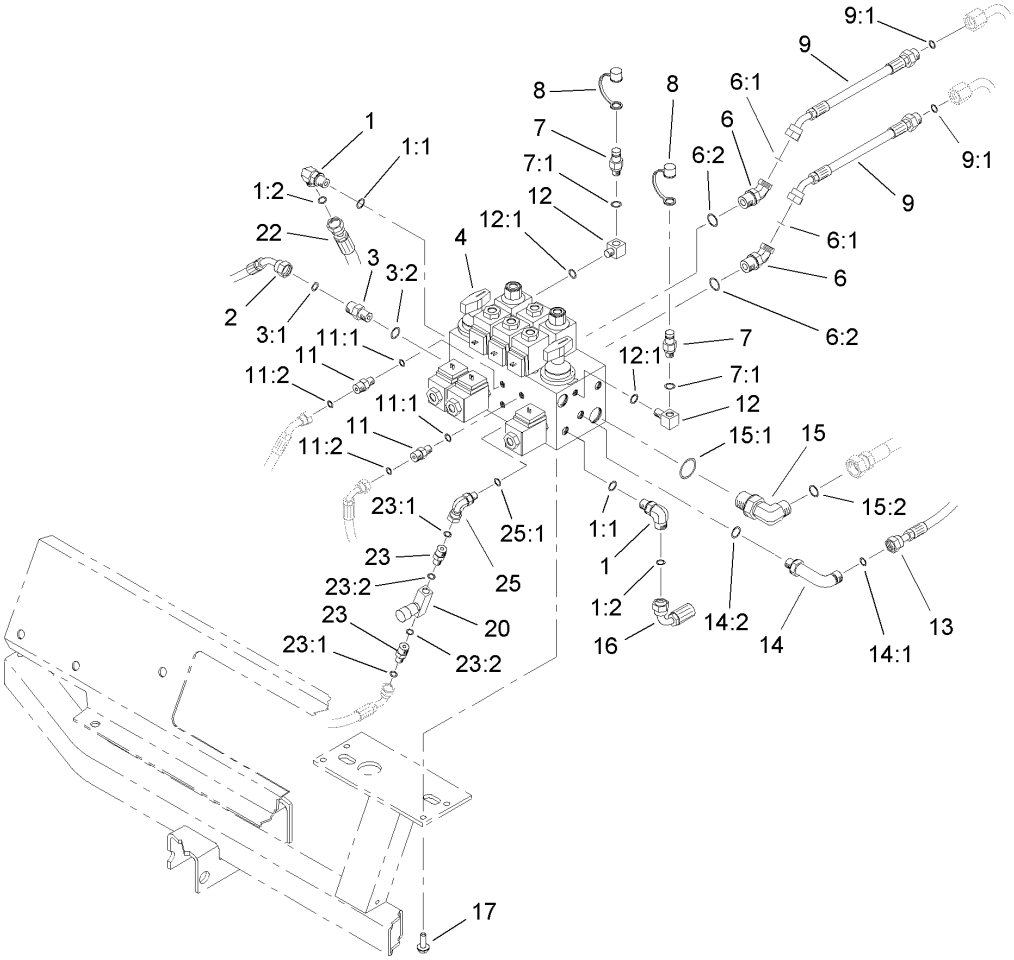

Hydraulic Control Block and Hose Assembly

Ref	Part No.	Qty.	Description
1	340-98	2	Fitting-HYD, 90 DEG
1:1	237-79	1	O-Ring
1:2	237-30	1	O-Ring
2	100-3879	1	HYD Hose ASM
3	340-4	1	Fitting-HYD, Straight
3:1	237-30	1	O-Ring
3:2	237-79	1	O-Ring
4	110-0004	1	HYD Manifold ASM
6	340-101	2	Fitting-HYD, 45 DEG
6:1	237-30	1	O-Ring
6:2	237-79	1	O-Ring
7	354-77	2	Fitting-Quick
7:1	237-78	1	O-Ring
8	354-79	2	Cap-Dust
9	86-9190	2	Hose
9:1	237-30	1	O-Ring
11	340-92	2	Fitting-HYD, Straight
11:1	237-78	1	O-Ring
11:2	237-21	1	O-Ring
12	75-6640	2	Fitting-HYD, Special
12:1	237-78	1	O-Ring
13	98-9348	1	HYD Hose ASM
14	98-9781	1	Fitting-HYD, 90 DEG
14:1	237-30	1	O-Ring

Ref	Part No.	Qty.	Description
14:2	237-79	1	O-Ring
15	340-139	1	Fitting-HYD, 90 DEG
15:1	237-81	1	O-Ring
15:2	237-65	1	O-Ring
16	98-9347	1	HYD Hose ASM
17	3234-14	4	Screw-HHF
20	98-9742	1	Valve-Control, Flow
22	100-3878	1	HYD Hose ASM
23	340-1	2	Adapter
23:1	237-21	1	O-Ring
23:2	237-42	1	O-Ring
❶24	3290-378	1	Tie-Cable
25	340-143	1	Elbow-Swivel, 90 DEG
25:1	237-78	1	O-Ring

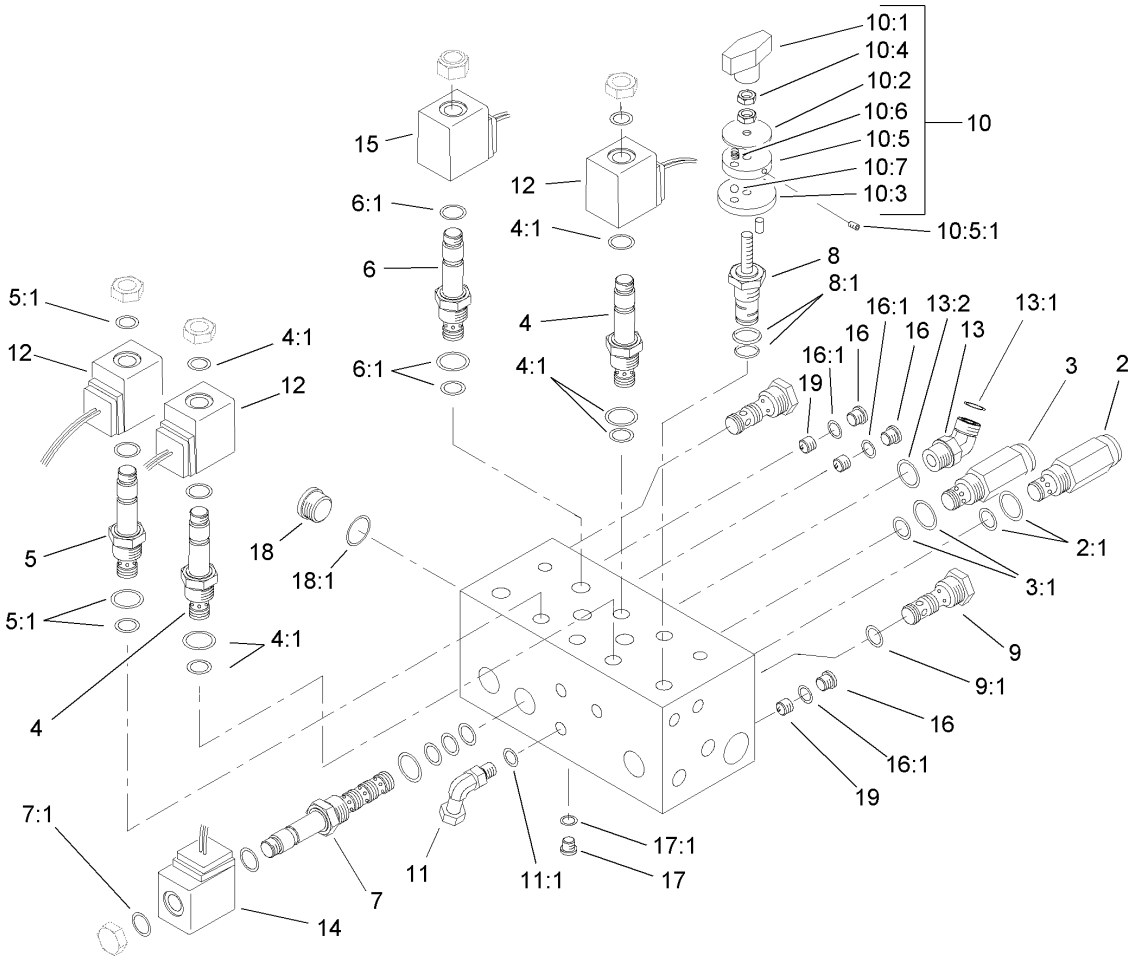

Hydraulic Manifold Assembly No. 110-0004

Ref	Part No.	Qty.	Description
2	75-2010	1	Cartridge-Relief
2:1	95-5645	1	Seal Kit
3	75-0920	1	Cartridge-Relief
3:1	95-5645	1	Seal Kit
4	94-2685	3	Cartridge-N.C., Spool
4:1	95-5645	1	Seal Kit
5	92-6315	1	Cartridge-Poppet, N.C.
5:1	95-5645	1	Seal Kit
6	110-0001	2	Valve-Cartridge
6:1	105-3334	1	Seal Kit
7	88-6960	3	Cartridge
7:1	95-5642	1	Seal Kit
8	98-9779	2	Cartridge-Flow
8:1	95-5645	1	Seal Kit
9	69-4120	2	Cartridge-Logic
9:1	69-4240	1	Seal Kit
10	94-3660	1	Detent Kit
10:1	94-5020	1	Knob ASM
10:2	94-5025	1	Plate-Locating
10:3	94-5026	1	Plate-Indicator
10:4	3218-1	2	Nut-Jam
10:5	94-5023	1	Plate-Detent
10:5:1	3245-36	1	Screw-Set, HSH
10:6	94-5027	2	Spring

Ref	Part No.	Qty.	Description
10:7	255-13	2	Ball-Steel, Stainless
11	340-143	1	Elbow-Swivel, 90 DEG
11:1	237-78	1	O-Ring
12	88-9190	4	Solenoid Coil Kit
13	340-101	1	Fitting-HYD, 45 DEG
13:1	237-30	1	O-Ring
13:2	237-79	1	O-Ring
14	88-9200	3	Coil-Solenoid
15	110-0002	2	Solenoid Coil ASM
16	106-1025	4	Plug-HYD
16:1	237-78	1	O-Ring
17	106-1026	1	Plug-HYD
17:1	237-42	1	O-Ring
18	106-1028	1	Plug-Leak, Zero
18:1	237-80	1	O-Ring
19	106-9084	2	Plug-Orifice

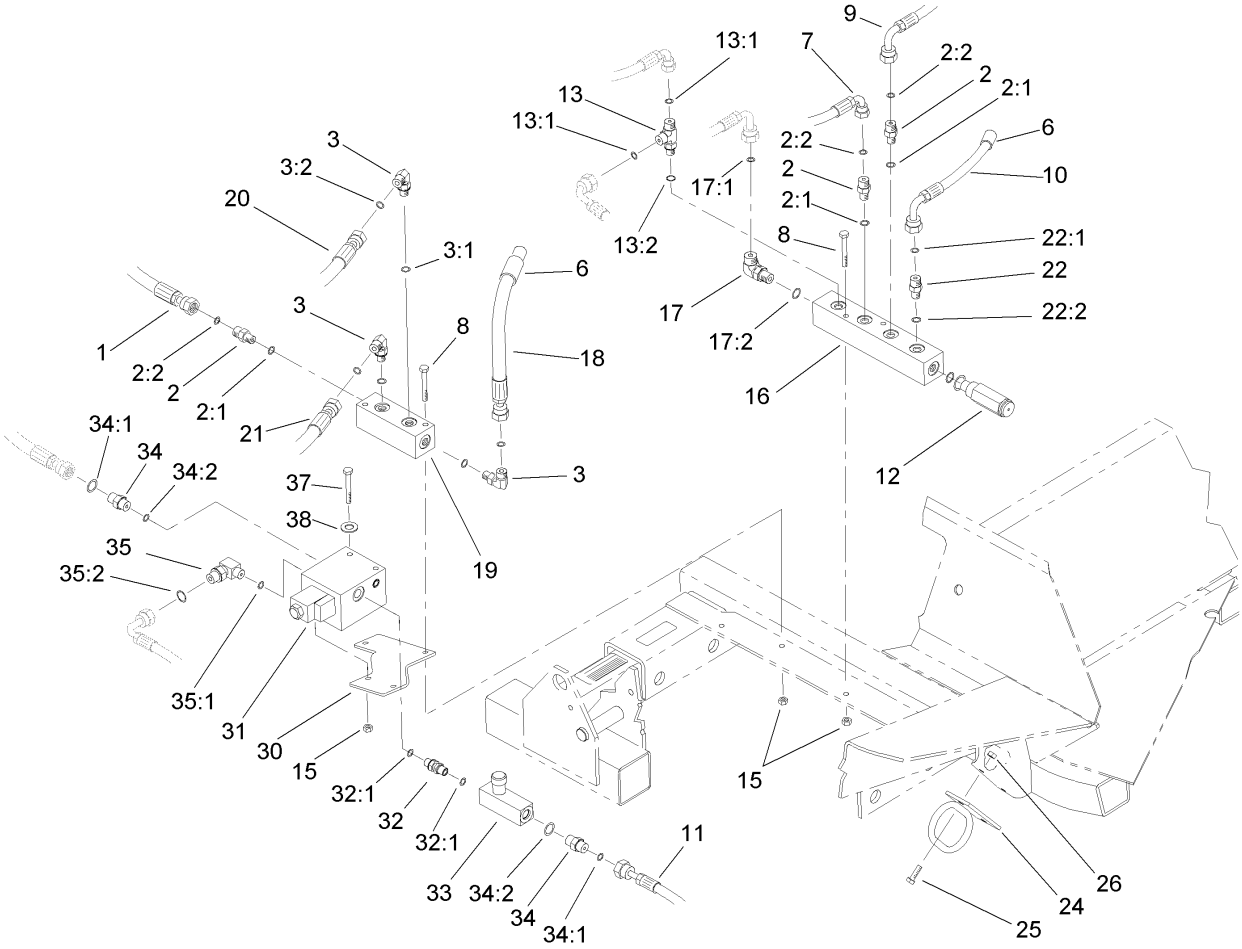

Front Hydraulic Manifold Assembly

Ref	Part No.	Qty.	Description
1	98-4584	1	HYD Hose ASM
2	340-92	3	Fitting-HYD, Straight
2:1	237-78	1	O-Ring
2:2	237-21	1	O-Ring
3	340-132	3	Fitting-HYD, 90 DEG
3:1	237-78	1	O-Ring
3:2	237-21	1	O-Ring
6	38-3400	2	Guard-Rubber
7	75-5910	1	Hose
8	321-18	4	Screw-HH
9	93-0118	1	Hose ASM
10	93-0119	1	Hose ASM
11	99-5643	1	Hose-HYD
12	93-0143	1	Cartridge-Relief
13	340-140	1	Adapter-Tee
13:1	237-21	2	O-Ring
13:2	237-78	1	O-Ring
15	3296-42	6	Nut-Lock, NI
16	93-0139	1	Block-Manifold, 6 Port
17	340-77	1	Fitting-HYD, 90 DEG
17:1	237-22	1	O-Ring
17:2	237-42	1	O-Ring
18	92-9096	1	Hose
19	75-1180	1	Block-Manifold, 4 Port

Ref	Part No.	Qty.	Description
20	98-4587	1	HYD Hose ASM
21	104-9323	1	HYD Hose ASM
22	340-2	1	Fitting-HYD, Straight
22:1	237-22	1	O-Ring
22:2	237-42	1	O-Ring
24	104-0028	2	Guide-Hose
25	322-5	4	Screw-HH
26	3296-29	4	Nut-Lock, NI
30	105-7510	1	Bracket-Mounting
31	105-3303	1	Flow Divider Valve ASM
32	99-5644	1	Fitting-Sae
32:1	237-42	2	O-Ring
33	98-9742	1	Valve-Control, Flow
34	340-1	2	Adapter
34:1	237-21	1	O-Ring
34:2	237-42	1	O-Ring
35	340-82	1	Adapter
35:1	237-42	1	O-Ring
35:2	237-21	1	O-Ring
37	321-23	2	Screw-HH
38	3256-2	2	Washer-Flat

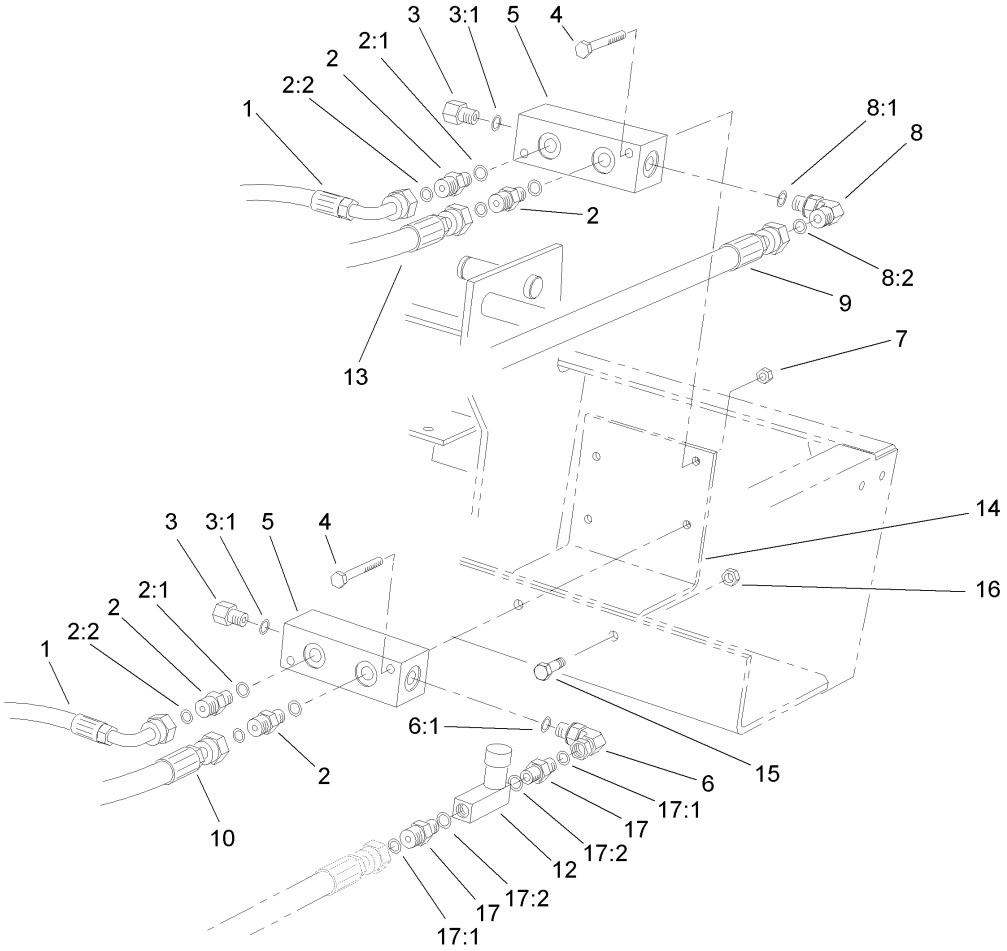

Rear Hydraulic Manifold Assembly

Ref	Part No.	Qty.	Description
1	75-6180	2	Hose
2	340-92	4	Fitting-HYD, Straight
2:1	237-78	1	O-Ring
2:2	237-21	1	O-Ring
3	353-512	2	Plug
3:1	237-78	1	O-Ring
4	321-11	4	Screw-HH
5	75-1180	2	Block-Manifold, 4 Port
6	340-143	1	Elbow-Swivel, 90 DEG
6:1	237-78	1	O-Ring
7	32128-33	4	Nut-HF
8	340-132	1	Fitting-HYD, 90 DEG
8:1	237-78	1	O-Ring
8:2	237-21	1	O-Ring
9	93-0118	1	Hose ASM
10	75-6080	1	Hose ASM
12	98-9742	1	Valve-Control, Flow
13	75-6070	1	Hose
14	94-4920-03	1	Plate-Mounting, Valve
15	322-5	2	Screw-HH
16	32128-20	2	Nut-HF
17	340-1	2	Adapter
17:1	237-21	1	O-Ring
17:2	237-42	1	O-Ring

Ref	Part No.	Qty.	Description
❶18	3290-378	1	Tie-Cable

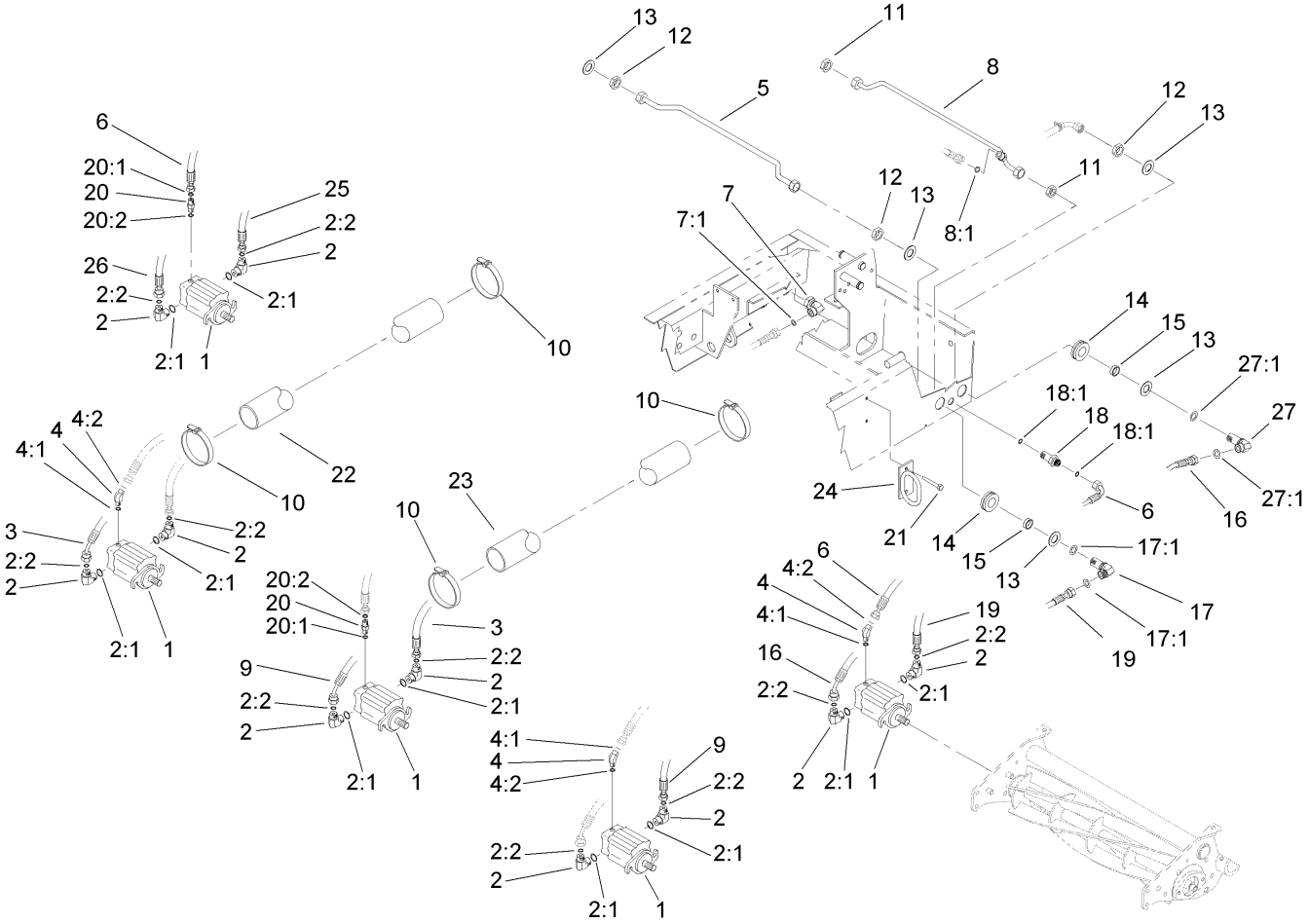

Reel Motor Assembly

Ref	Part No.	Qty.	Description
1	100-6426	5	HYD Motor ASM
2	340-98	10	Fitting-HYD, 90 DEG
2:1	237-79	1	O-Ring
2:2	237-30	1	O-Ring
3	104-9322	1	HYD Hose ASM
4	340-103	3	Fitting-HYD, 45 DEG
4:1	237-78	1	O-Ring
4:2	237-21	1	O-Ring
5	94-4918	1	Tube ASM
6	98-4583	2	HYD Hose ASM
7	94-6031	1	Fitting-HYD
7:1	237-30	1	O-Ring
8	100-3714	1	Drain Tube ASM
8:1	237-21	1	O-Ring
9	104-9321	1	HYD Hose ASM
10	3290-379	10	Tie-Cable
11	340-70	2	Nut-Lock
12	340-127	4	Nut-Bulkhead
13	69-8930	8	Washer
14	240-5	4	Grommet-Rubber
15	69-8960	4	Spacer
16	100-3876	1	HYD Hose ASM
17	93-9151	3	Fitting-HYD
17:1	237-30	2	O-Ring

Ref	Part No.	Qty.	Description
18	340-71	2	Fitting-Straight, Bulkhead
18:1	237-22	2	O-Ring
19	100-3877	1	HYD Hose ASM
20	340-92	2	Fitting-HYD, Straight
20:1	237-78	1	O-Ring
20:2	237-21	1	O-Ring
21	32104-32	4	Screw-HWH
22	99-5648	4	Sleeve-Protective
23	99-5617	1	Sleeve-Protective
24	104-0028	2	Guide-Hose
25	104-0057	1	HYD Hose ASM
26	104-0069	1	HYD Hose ASM
27	100-3713	1	Fitting-HYD, 90 DEG
27:1	237-30	2	O-Ring

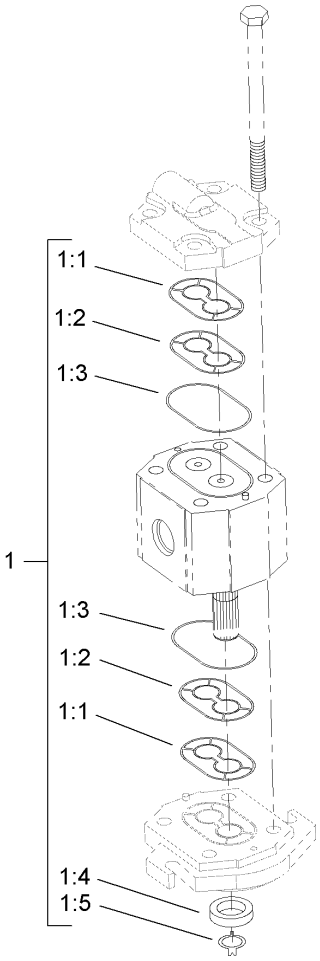

Hydraulic Motor Assembly No. 100-6426

Ref	Part No.	Qty.	Description
1	105-9758	1	Seal Kit
❷1:1		2	Seal-Extrusion, Anti
❷1:2		2	Seal-Pressure
❷1:3		2	Seal-Dust
❷1:4		1	Seal-Shaft
❷1:5		1	Washer-Backup

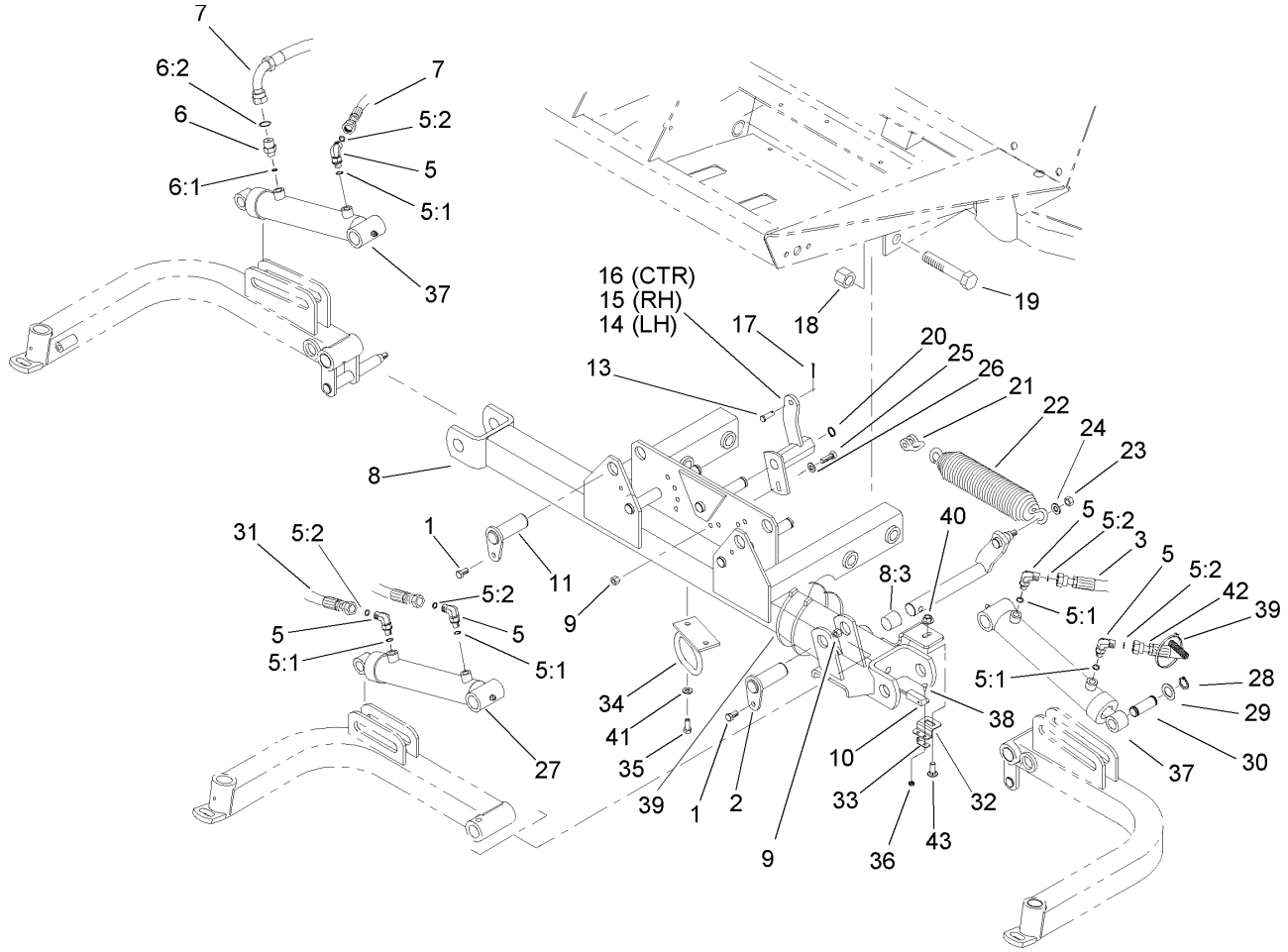

Front Lift Circuit Assembly

Ref	Part No.	Qty.	Description
1	32144-14	3	Screw-HWHTF
2	106-9208	1	Short Cylinder Pin ASM
3	99-5643	1	Hose-HYD
5	340-132	5	Fitting-HYD, 90 DEG
5:1	237-78	1	O-Ring
5:2	237-21	1	O-Ring
6	340-92	1	Fitting-HYD, Straight
6:1	237-78	1	O-Ring
6:2	237-21	1	O-Ring
7	99-5641	2	Hose-HYD
8	107-1801	1	Carrier Frame ASM
❶8:2	302-5	1	Fitting-Grease
8:3	67-1750	2	Bushing
9	3296-29	4	Nut-Lock, NI
10	100-1270	1	Switch-Proximity
11	105-9889	2	Cylinder Pin ASM
❶12	3290-379	4	Tie-Cable
13	283-6	3	Pin-Clevis
14	75-5220-03	1	Bracket-Spring, LH
15	75-5200-03	1	Bracket-Spring, RH
16	75-5210-03	1	Bracket-Spring, Center
17	3272-10	3	Pin-Cotter
18	3296-51	4	Nut-Lock, NI
19	328-7	4	Screw-HH

Ref	Part No.	Qty.	Description
20	32151-48	3	E-Ring
21	282-4	3	Shackle
22	5-0743-03	3	Spring-Mower
23	3296-44	3	Nut-Lock, NI
24	3256-24	3	Washer-Flat
25	322-5	3	Screw-HH
26	3256-23	3	Washer-Flat
27	93-9310	1	Cylinder-HYD
28	32120-93	6	Ring-Retaining, EXT
29	3-6498	6	Washer-Thrust
30	104-0046	3	Pin-Slide, Cylinder
31	75-5900	1	Hose
32	106-5958	1	Bracket-Switch
33	100-4872	1	Plate-Switch, Neutral
34	104-0028	1	Guide-Hose
35	322-5	2	Screw-HH
36	32149-7	1	Nut-Keps
37	99-6986	2	Cylinder-HYD
38	104-1450	1	Bolt-CARR
39	3290-378	3	Tie-Cable
40	32128-43	1	Nut-Flange
41	3253-4	2	Washer-Lock
42	99-5642	1	Hose-HYD
43	3231-22	1	Screw-CARR

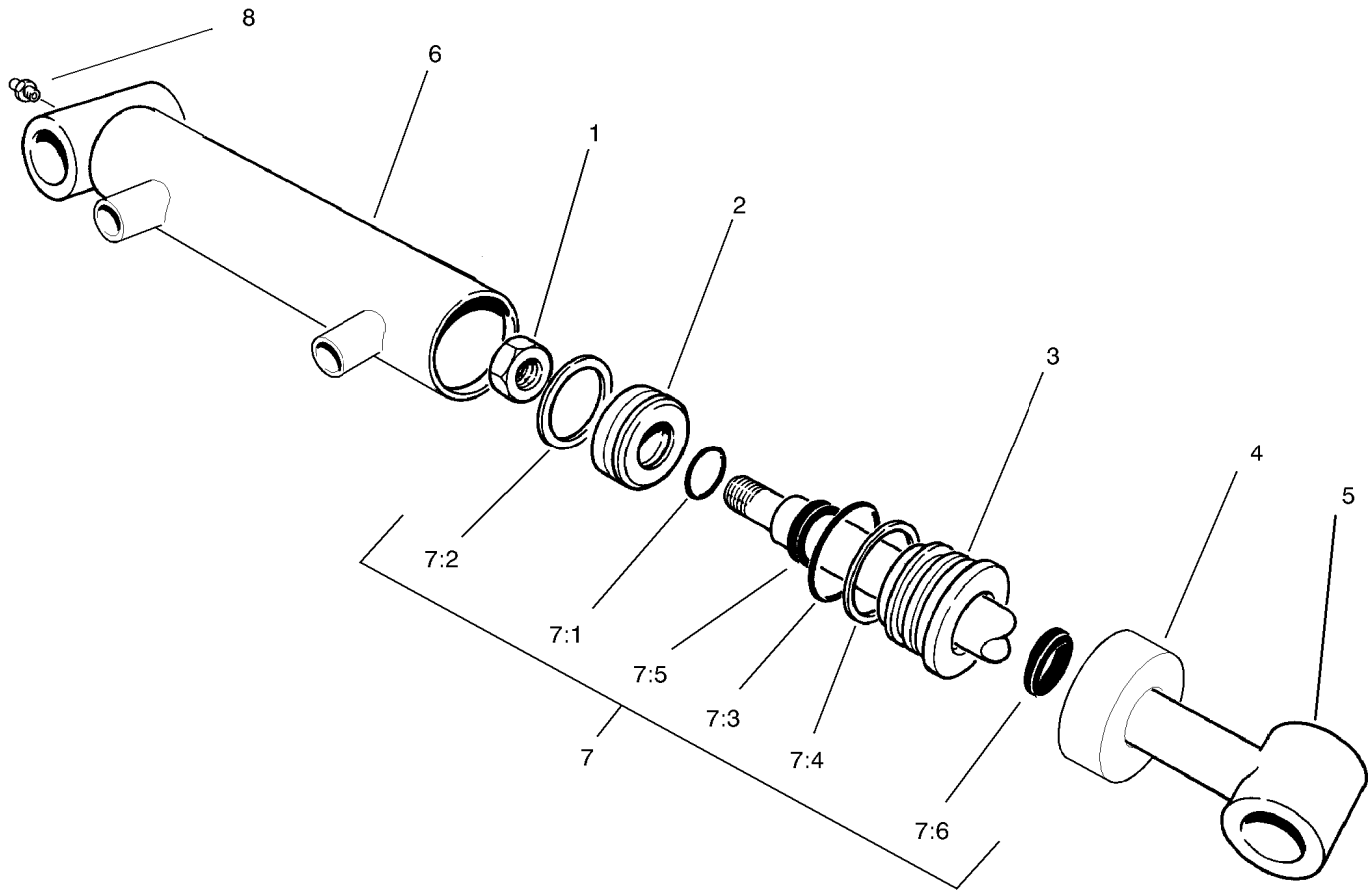

Hydraulic Cylinder Assembly No. 93-9310

Ref	Part No.	Qty.	Description
❷1		1	Locknut
❷2		1	Piston
❷3		1	Head
❷4		1	Collar
❷5		1	Shaft W/Tube
❷6		1	Barrel ASM
7	86-7330	1	Seal Kit
❷7:1		1	Seal-Dust
❷7:2		1	Seal-Special
❷7:3		1	Seal-Dust
❷7:4		1	Backup
❷7:5		1	Seal-Rod
❷7:6		1	Seal-Dust
8	302-5	1	Fitting-Grease

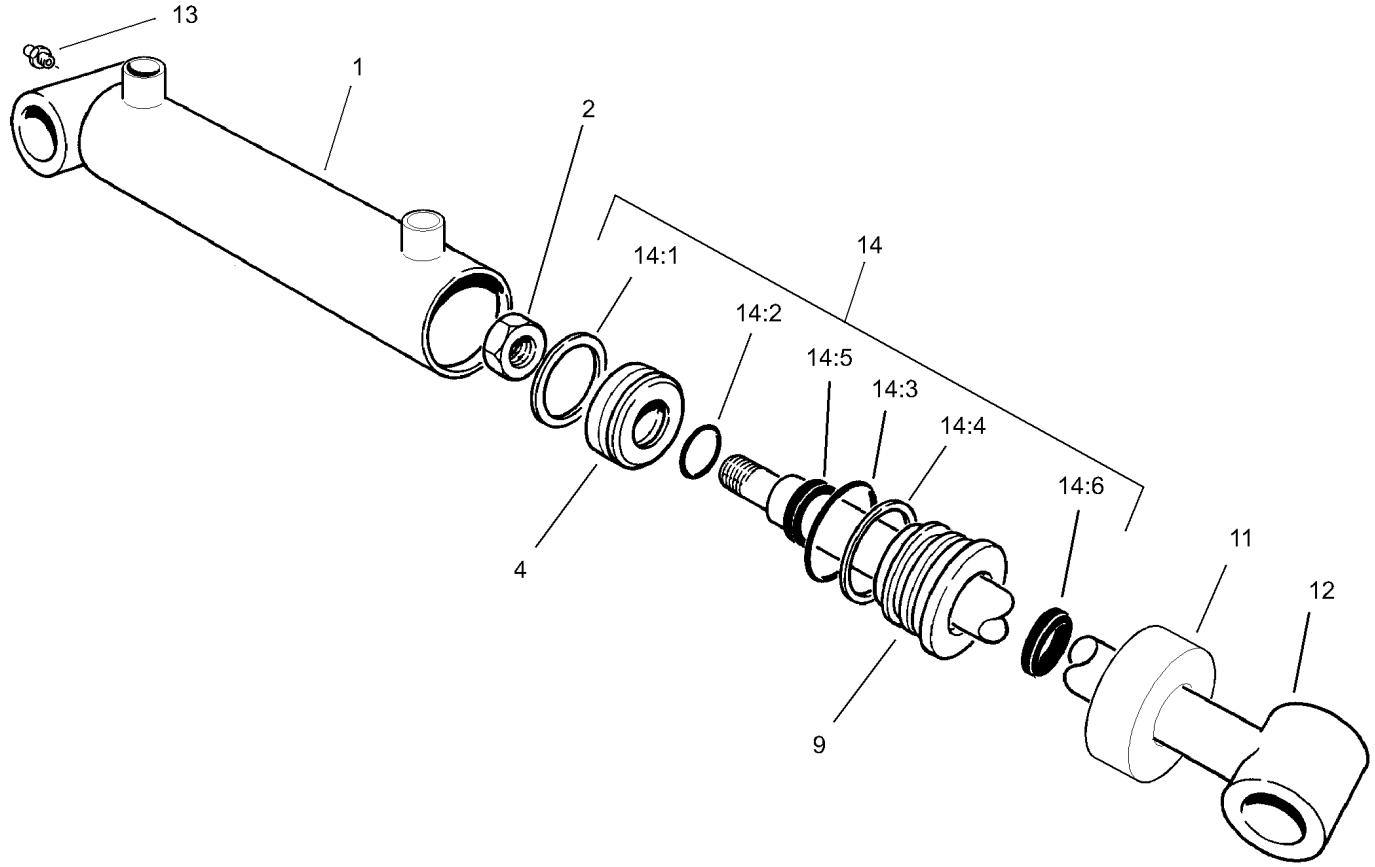

Hydraulic Cylinder Assembly No. 99-6986

Ref	Part No.	Qty.	Description
❷1		1	Barrel
2	32152-10	1	Locknut
❷4		1	Piston
❷9		1	Head
❷11		1	Collar
❷12		1	Shaft W/Clevis
❷13		1	Fitting-Grease
14	100-8023	1	Seal Repair Kit
❷14:1		1	Seal-Psp
❷14:2		1	Seal-Dust
❷14:3		1	Seal-Dust
❷14:4		1	Backup
❷14:5		1	Seal-Rod
❷14:6		1	Seal-Dust

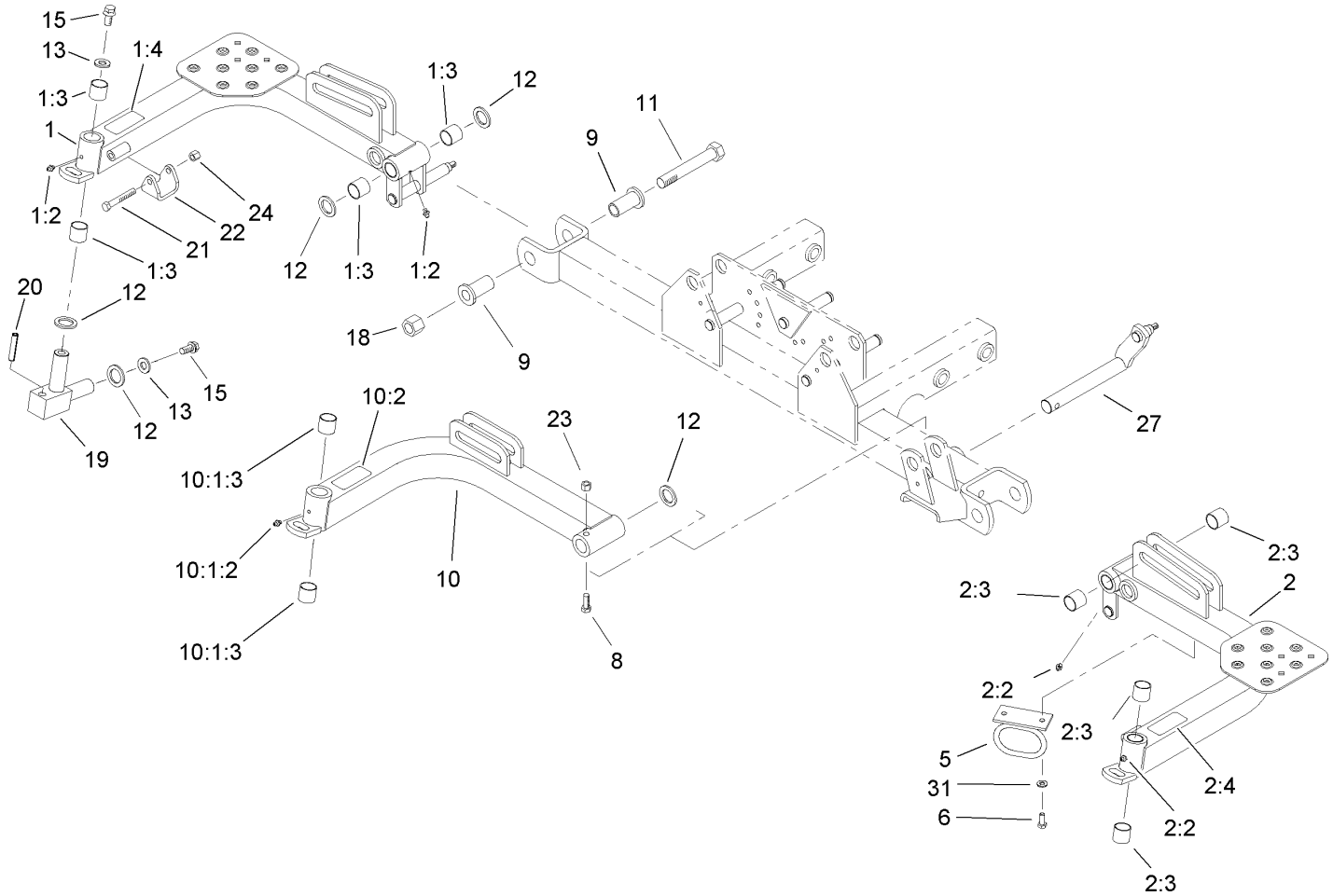

Front Lift Arm Assembly

Ref	Part No.	Qty.	Description
1	107-8845	1	RH Lift Arm ASM
1:2	302-5	2	Fitting-Grease
1:3	67-1750	4	Bushing
1:4	93-6696	1	Decal-Warning
2	107-1802	1	LH Lift Arm ASM
2:2	302-5	2	Fitting-Grease
2:3	67-1750	4	Bushing
2:4	93-6696	1	Decal-Warning
5	104-0028	2	Guide-Hose
6	322-5	4	Screw-HH
8	323-11	1	Screw-HH
9	84-8320	4	Insert-Hinge
10	104-8602	1	Center Lift Arm ASM
10:1:2	302-5	1	Fitting-Grease
10:1:3	67-1750	2	Bushing
10:2	93-6696	1	Decal-Warning
11	328-12	2	Screw-HH
12	256-115	11	Washer-Thrust
13	3256-6	6	Washer-Flat
15	98-7993	6	Screw-HHF
18	3296-51	2	Nut-Lock, NI
19	110-0009	3	Joint Arm ASM
20	104-9319	3	Pin-Grooved
21	323-12	2	Screw-HH

Ref	Part No.	Qty.	Description
22	75-5410	2	Bracket-Arm
23	3296-44	1	Nut-Lock, NI
24	3296-39	2	Nut-Lock, NI
27	75-4550-03	1	Shaft-Lift, Center
31	3253-4	4	Washer-Lock

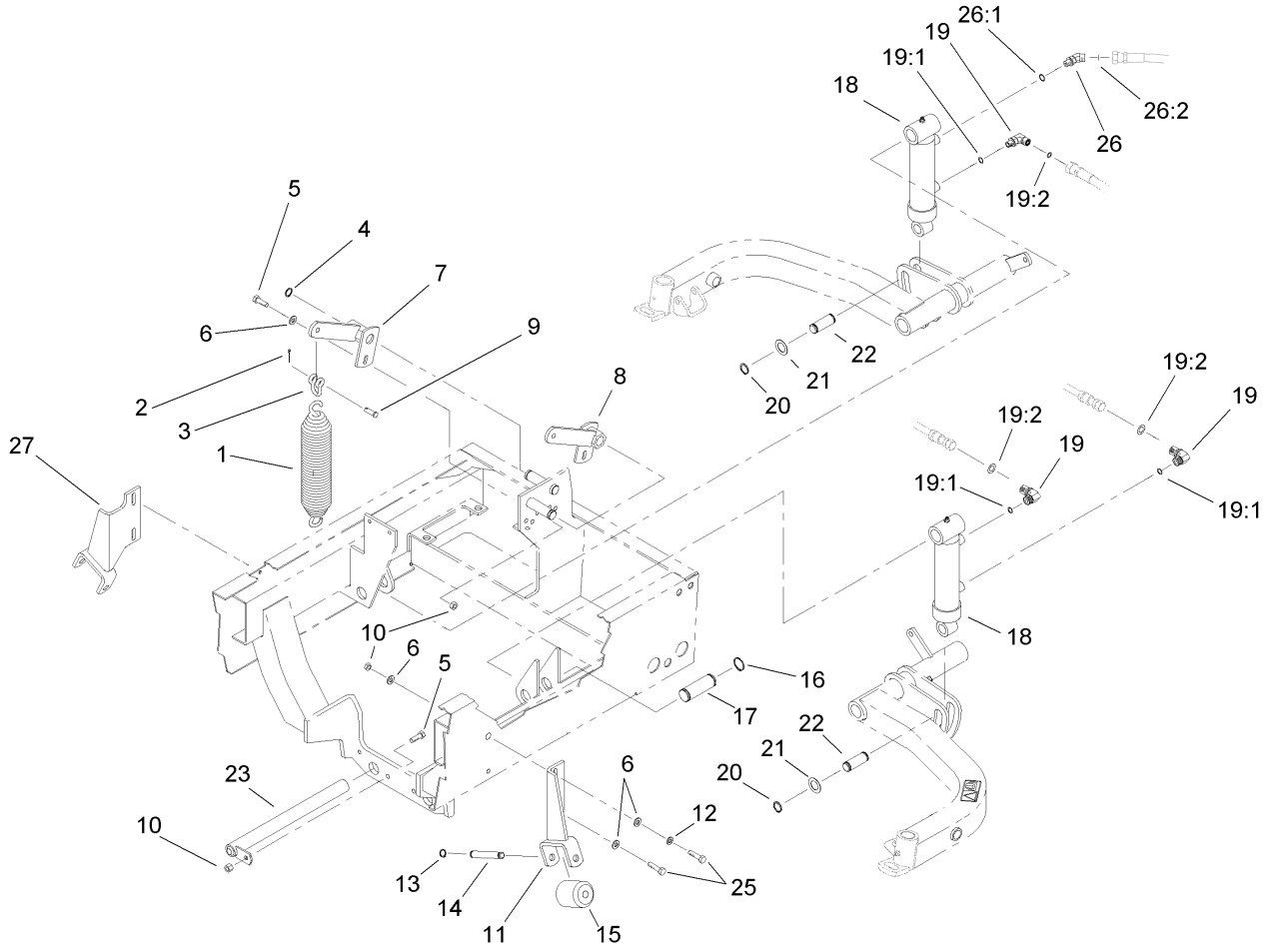

Rear Lift Circuit Assembly

Ref	Part No.	Qty.	Description
1	5-0743-03	2	Spring-Mower
2	3272-10	2	Pin-Cotter
3	282-4	2	Shackle
4	32151-48	2	E-Ring
5	322-5	4	Screw-HH
6	3256-23	9	Washer-Flat
7	98-4548-03	1	Bracket-Spring, RH
8	98-4536-03	1	Bracket-Spring, LH
9	283-6	2	Pin-Clevis
10	3296-29	11	Nut-Lock, NI
11	100-3831-01	1	Bracket-Roller, LH
12	3253-4	2	Washer-Lock
13	32151-61	4	Ring-Retaining
14	75-5400	2	Pin-Roller
15	75-5390	2	Roller
16	32151-36	4	Ring-Retaining
17	75-5360	2	Pin-Cylinder
18	93-9311	2	Cylinder-HYD
19	340-132	3	Fitting-HYD, 90 DEG
19:1	237-78	1	O-Ring
19:2	237-21	1	O-Ring
20	32120-93	4	Ring-Retaining, EXT
21	3-6498	4	Washer-Thrust
22	104-0046	2	Pin-Slide, Cylinder

Ref	Part No.	Qty.	Description
23	93-0069-03	2	Pin-Rear
❶24	3290-379	3	Tie-Cable
25	322-6	4	Screw-HH
26	340-103	1	Fitting-HYD, 45 DEG
26:1	237-78	1	O-Ring
26:2	237-21	1	O-Ring
27	100-3829-01	1	Bracket-Roller, RH

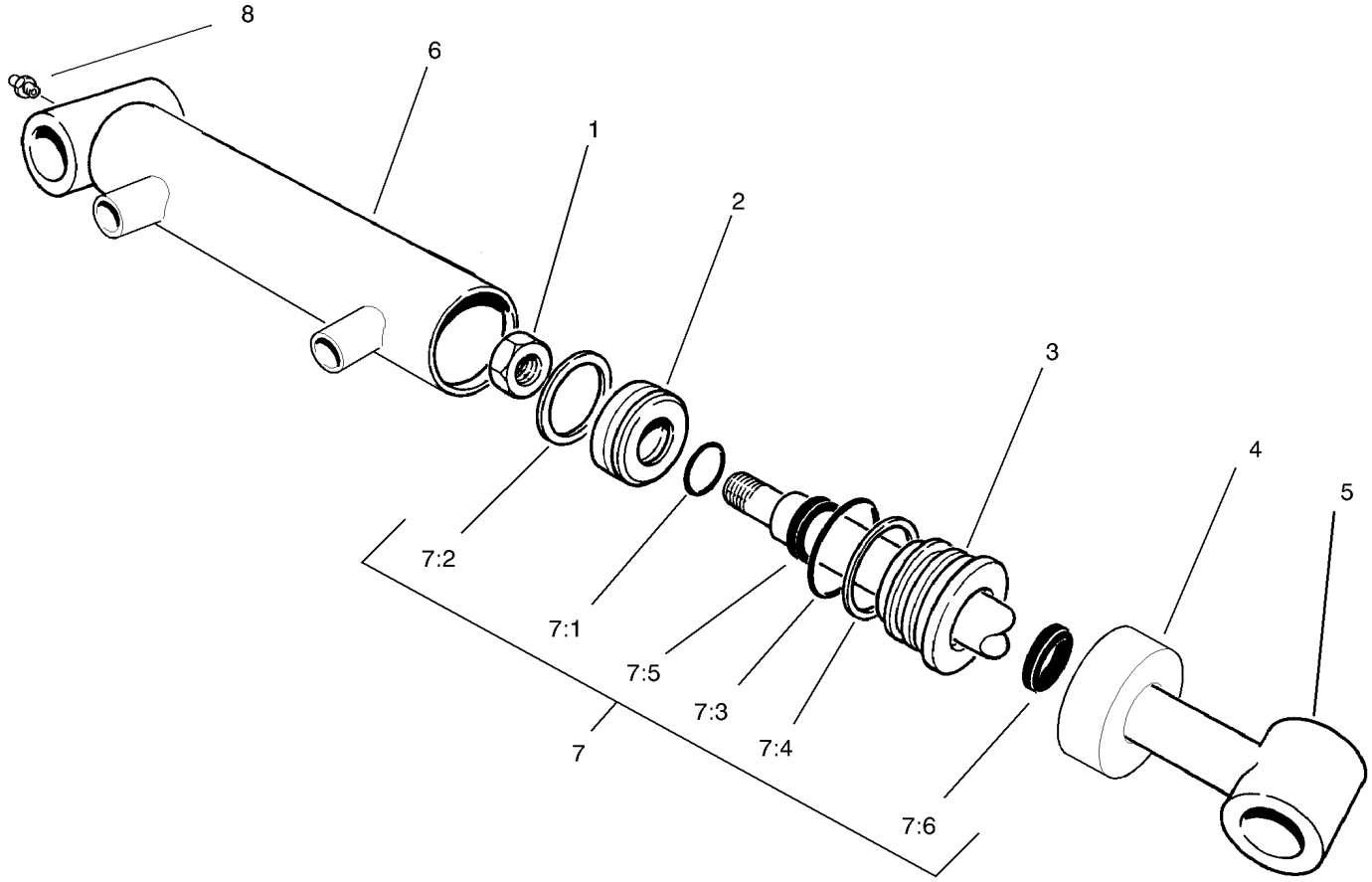

Hydraulic Cylinder Assembly No. 93-9311

Ref	Part No.	Qty.	Description
❷1		1	Locknut
❷2		1	Piston
❷3		1	Head
❷4		1	Collar
❷5		1	Shaft W/Tube
❷6		1	Barrel ASM
7	86-7330	1	Seal Kit
❷7:1		1	Seal-Dust
❷7:2		1	Seal-Special
❷7:3		1	Seal-Dust
❷7:4		1	Backup
❷7:5		1	Seal-Rod
❷7:6		1	Seal-Dust
8	302-5	1	Fitting-Grease

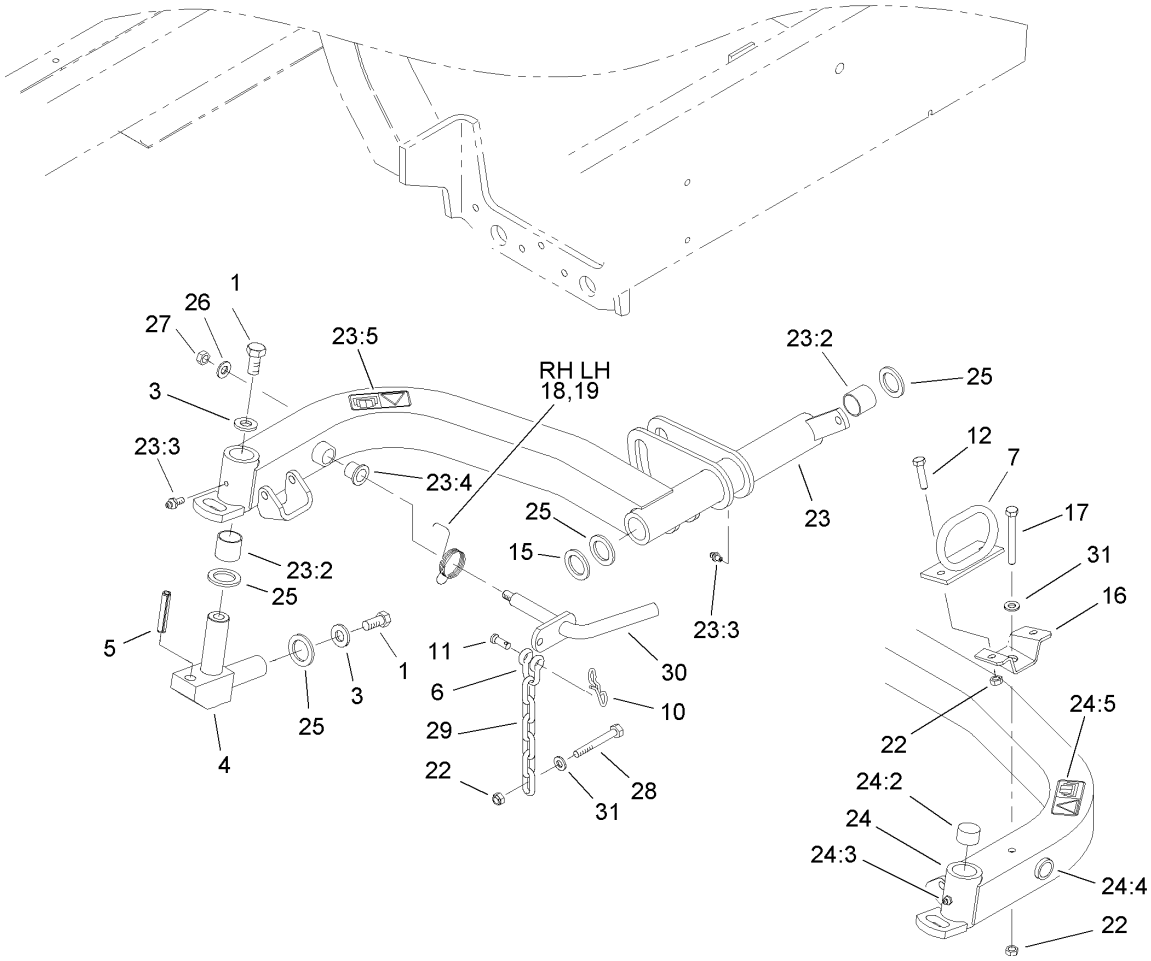

Rear Lift Arm Assembly

Ref	Part No.	Qty.	Description
1	98-7993	4	Screw-HHF
3	3256-6	4	Washer-Flat
4	110-0009	2	Joint Arm ASM
5	104-9319	2	Pin-Grooved
6	282-4	2	Shackle
7	104-0028	1	Guide-Hose
❶9	3290-379	1	Tie-Cable
10	105-7512	2	Pin-Tie, Bow
11	283-6	2	Pin-Clevis
12	322-5	2	Screw-HH
15	93-0142	2	Bushing-Straight
16	94-4919-03	1	Bracket-Clamp, Hose
17	322-13	1	Screw-HH
18	75-4520	1	Spring-Torsion, RH
19	75-4530	1	Spring-Torsion, LH
22	3296-29	5	Nut-Lock, NI
23	100-3828	1	RH Rear Lift Arm ASM
23:2	67-1750	4	Bushing
23:3	302-5	2	Fitting-Grease
23:4	256-287	2	Bushing
23:5	93-6696	1	Decal-Warning
24	100-3827	1	LH Rear Lift Arm ASM
24:2	256-287	2	Bushing
24:3	302-5	2	Fitting-Grease

Ref	Part No.	Qty.	Description
24:4	67-1750	4	Bushing
24:5	93-6696	1	Decal-Warning
25	256-115	12	Washer-Thrust
26	3256-24	2	Washer-Flat
27	3296-39	2	Nut-Lock, NI
28	322-12	2	Screw-HH
29	84-2451	2	Chain-Straight, 5 Link
30	100-3834-03	2	Rod-Pivot
31	3256-23	3	Washer-Flat

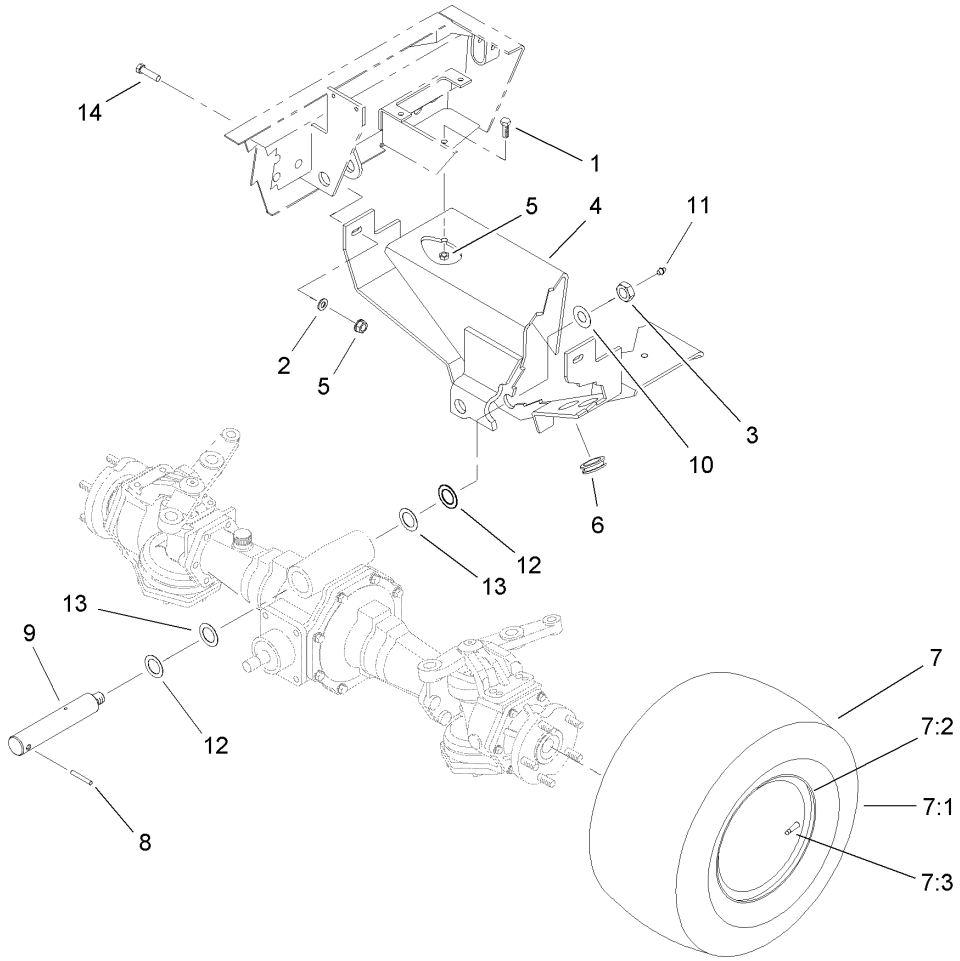

Rear Axle Support Assembly

Ref	Part No.	Qty.	Description
1	323-7	2	Screw-HH
2	3256-24	2	Washer-Flat
3	32146-20	1	Nut-Jam
4	98-8172-03	1	Support-Axle
5	3296-39	4	Nut-Lock, NI
6	237-165	2	Grommet
❷7		2	Tire And Wheel ASM
7:1	86-5910	1	Tire-6 Ply
7:2	100-2582	1	Rim
7:3	232-27	1	Stem-Valve
8	32121-32	1	Pin-Roll
9	98-8173	1	Pin-Pivot, Axle
10	71-4540	1	Washer-Thrust
11	302-2	1	Fitting-Grease
12	99-8431	2	Washer-Thrust
13	99-8432	2	Washer-Thrust
14	323-13	2	Screw-HH

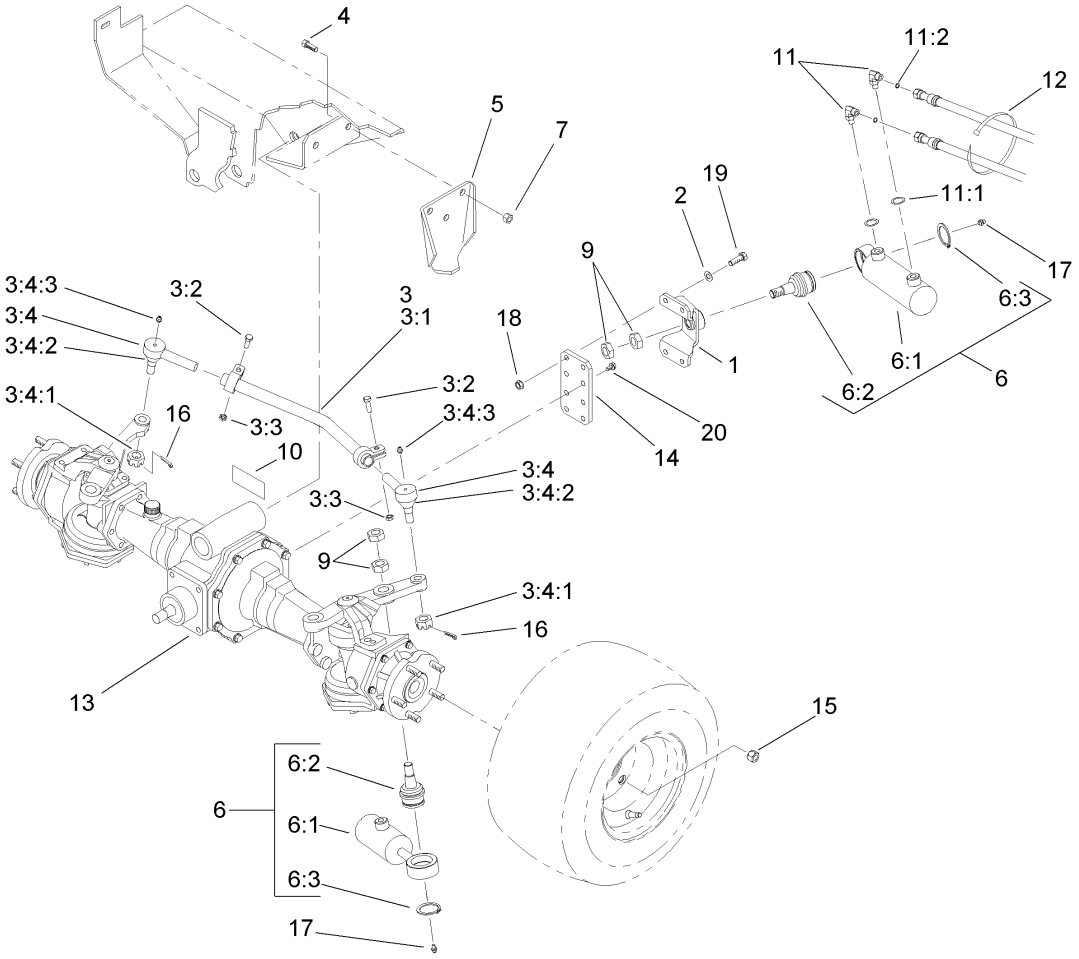

Four Wheel Drive Rear Axle Assembly

Ref	Part No.	Qty.	Description
1	98-3948-03	1	Mount-Cylinder
2	48-9220	4	Washer
3	98-3932	1	Tie Rod ASM
3:1	99-8996	1	Tube And Clamp ASM
3:2	323-9	2	Screw-HH
3:3	3296-39	2	Nut-Lock, NI
3:4	71-4740	2	End-Rod, Tie (RH)
3:4:1	105-7941	1	Nut-Hex, Slotted
3:4:2	105-7835	1	Seal
3:4:3	302-5	1	Fitting-Grease
4	325-5	6	Screw-HH
5	99-6966-03	2	Stop-Axle
❷6		1	Steering Cylinder ASM
6:1	98-8163	1	Cylinder-Steering
6:2	106-6774	2	Joint-Ball
6:3	32151-104	2	Ring-Retaining, External
7	3296-23	6	Nut-Lock, NI
9	3220-6	4	Nut-Jam
10	93-6697	1	Decal-Lube
11	340-132	2	Fitting-HYD, 90 DEG
11:1	237-78	1	O-Ring
11:2	237-21	1	O-Ring
12	3290-378	1	Tie-Cable
13	110-4800	1	Drive Axle ASM

Ref	Part No.	Qty.	Description
14	98-8198-03	1	Plate-Bracket, Cylinder
15	93-5268	10	Nut-Lug
16	3272-11	2	Pin-Cotter
17	302-5	2	Fitting-Grease
18	3296-39	4	Nut-Lock, NI
19	323-8	4	Screw-HH
20	95-8812	4	Screw-HH

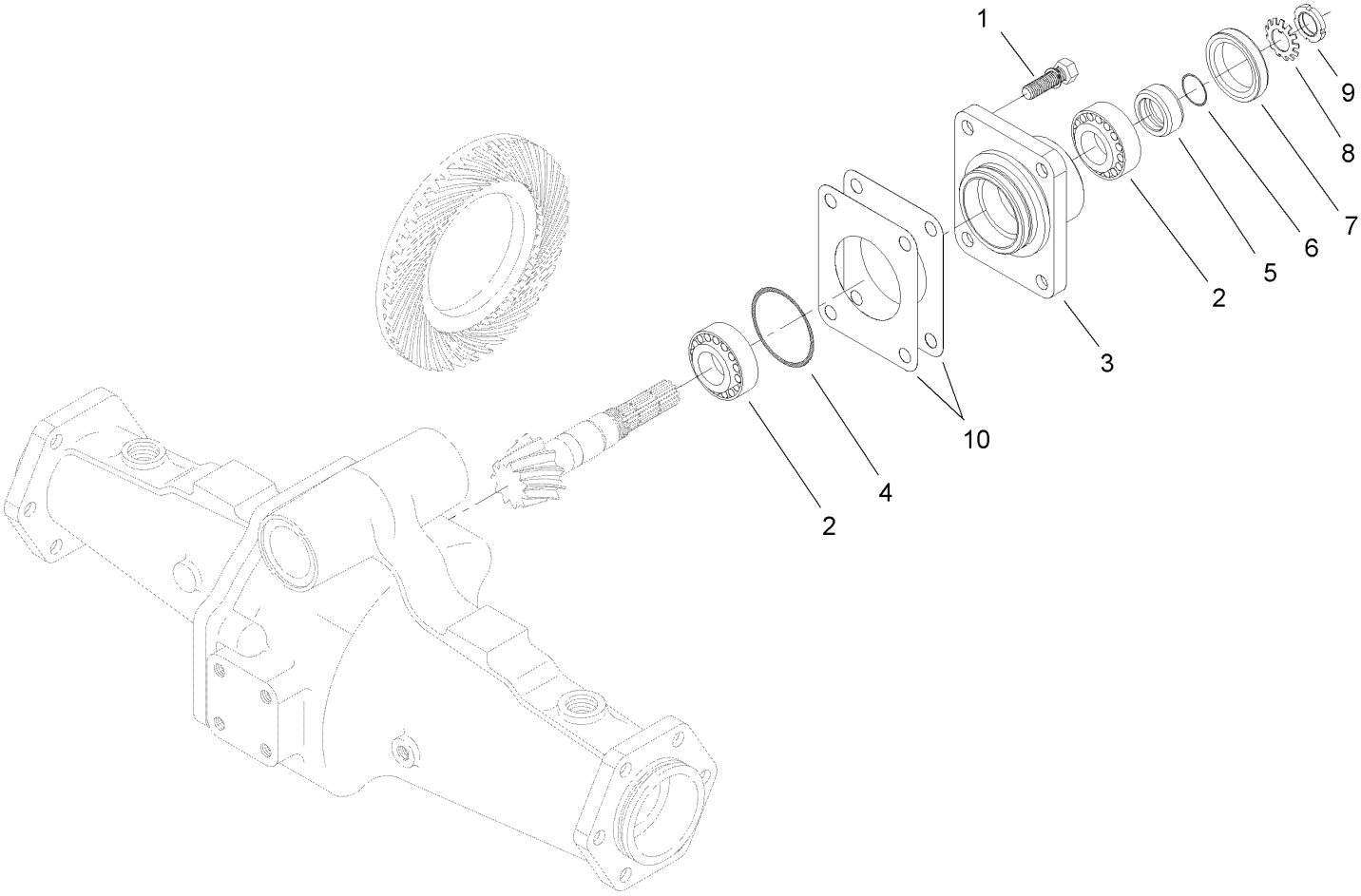

Bevel Pinion Shaft Assembly
Rear Axle Assembly No. 110-4800

Ref	Part No.	Qty.	Description
1	99-7575	4	Bolt
2	99-7570	2	Bearing-Roller, Taper
3	95-7535	1	Case-Bearing
4	106-1065	1	O-Ring
5	99-7572	1	Collar-Seal, Oil
6	106-1066	1	O-Ring
7	99-7574	1	Seal-Oil
8	99-7559	1	Washer-Lock
9	99-7560	1	Nut-Lock
10	99-7550	2	Shim 0.1
10	99-7551	2	Shim 0.2

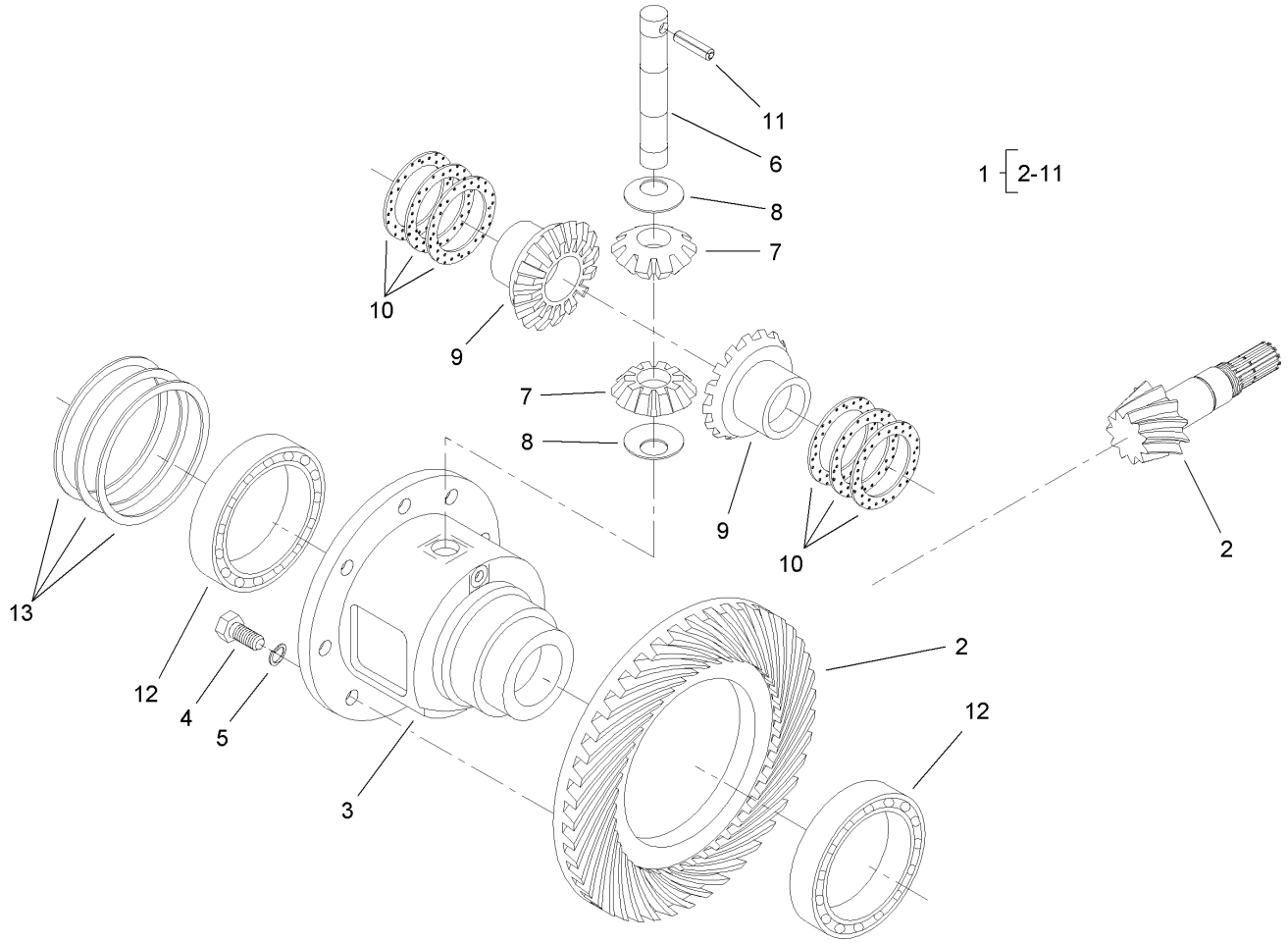

Differential Assembly
Rear Axle Assembly No. 110-4800

Ref	Part No.	Qty.	Description
1	95-7503	1	Differential ASM
2	100-2555	1	Ring And Pinion Matched Set
3	95-7502	1	Case-Differential
4	99-7576	8	Bolt
5	3253-4	8	Washer-Lock
6	99-7578	1	Shaft-Differential
7	99-7579	2	Pinion-Differential
8	99-7580	2	Washer-Differential
9	99-7581	2	Gear-Differential
10	99-7582	2	Washer-Differential
10	99-7583	2	Washer-Differential
10	99-7584	2	Washer-Differential
11	99-7588	1	Pin-Spring
12	99-7562	2	Bearing-Ball
13	99-7585	2	Shim 0.1
13	99-7586	2	Shim 0.2
13	99-7587	2	Shim 0.4

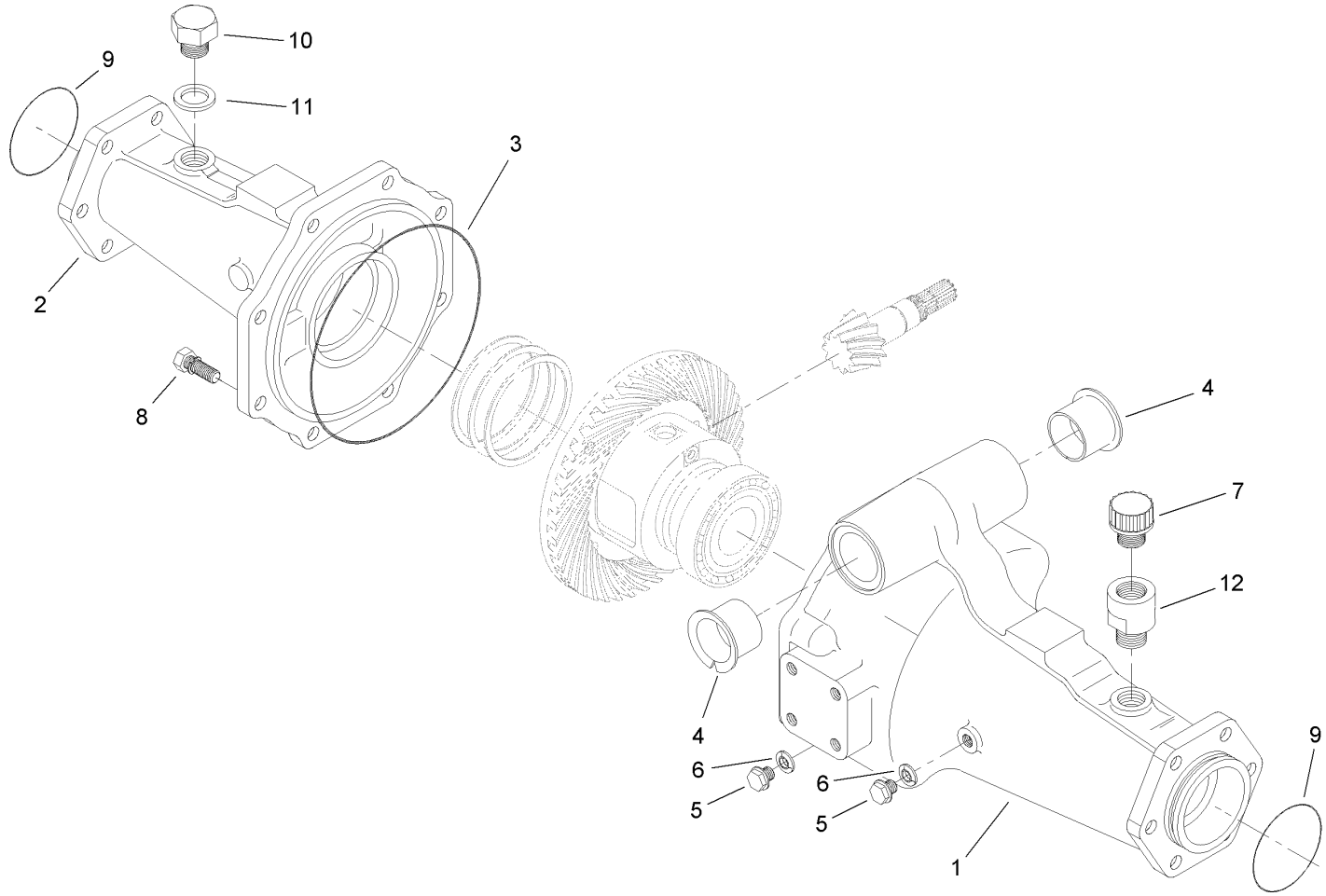

Axle Support Assembly
Rear Axle Assembly No. 110-4800

Ref	Part No.	Qty.	Description
1	95-7508	1	Support-Axle
2	95-7506	1	Support-Axle
3	106-1067	1	O-Ring
4	95-7537	2	Bushing-Flanged
5	99-7589	2	Plug
6	99-7590	2	Washer-Seal
7	99-7591	1	Oil Plug ASM
8	99-7592	8	Bolt
9	99-7593	2	O-Ring
10	104-8643	1	Plug
11	104-8644	1	O-Ring
12	104-2377	1	Extension-Vent

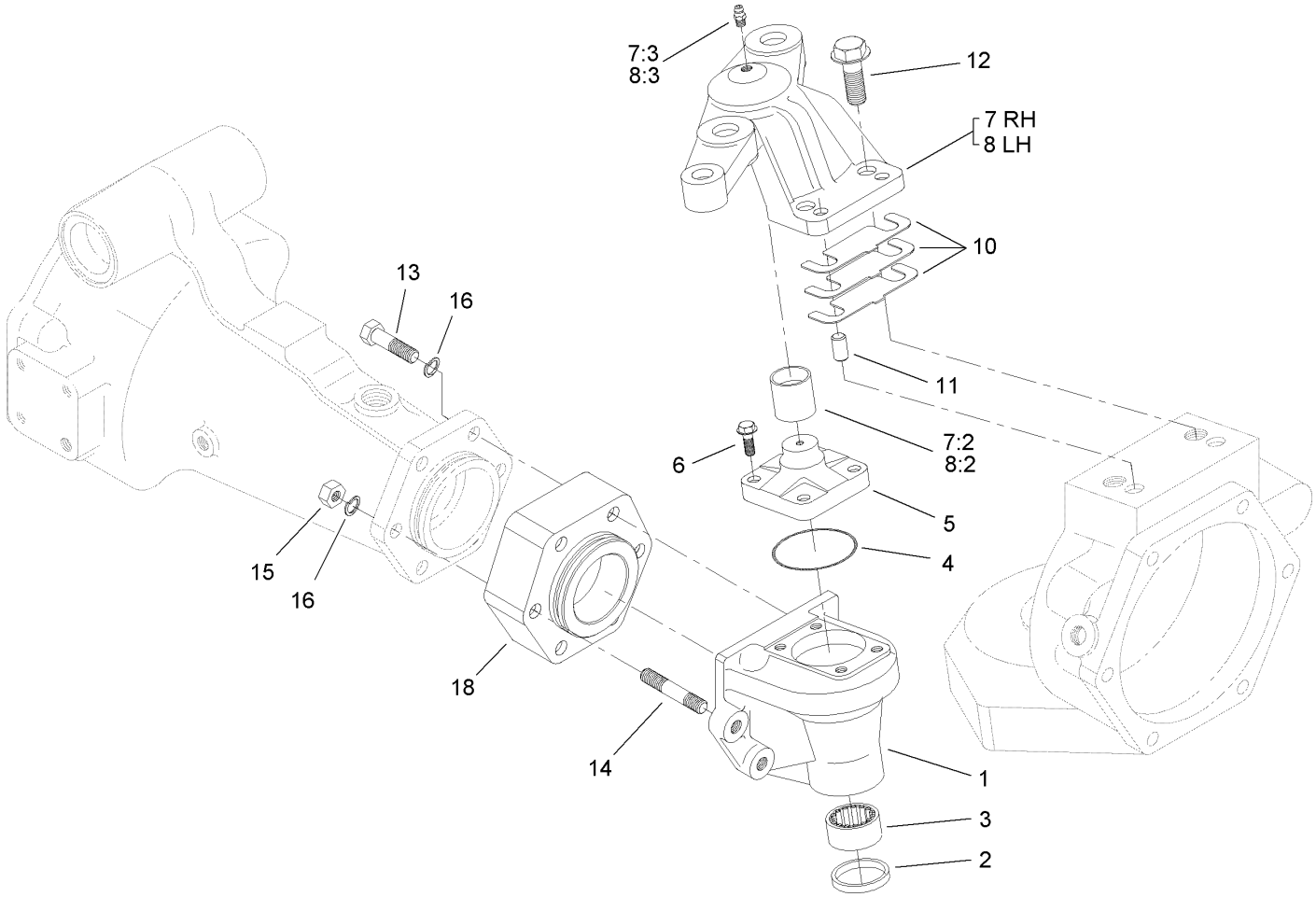

Bevel Gear Case Assembly
Rear Axle Assembly No. 110-4800

Ref	Part No.	Qty.	Description
1	106-1099	2	Case-Gear, Bevel
2	99-7594	2	Seal-Oil
3	99-7595	2	Bearing-Needle
4	104-2372	2	O-Ring
5	104-2373	2	Knuckle
6	104-2374	8	Bolt
7	100-3746	1	RH Axle Case Support ASM
7:2	99-7529	1	Bushing
7:3	99-7528	1	Nipple-Grease
8	100-3748	1	LH Axle Case Support ASM
8:2	99-7529	1	Bushing
8:3	99-7528	1	Nipple-Grease
10	95-7547	2	Shim 0.1
10	95-7548	2	Shim 0.2
10	95-7549	2	Shim 0.3
11	99-7597	4	Pin-Dowel
12	99-7598	4	Bolt
13	100-3736	8	Bolt
14	100-3737	4	Stud
15	99-7526	4	Nut
16	99-7527	12	Washer-Spring
18	99-7565	2	Spacer

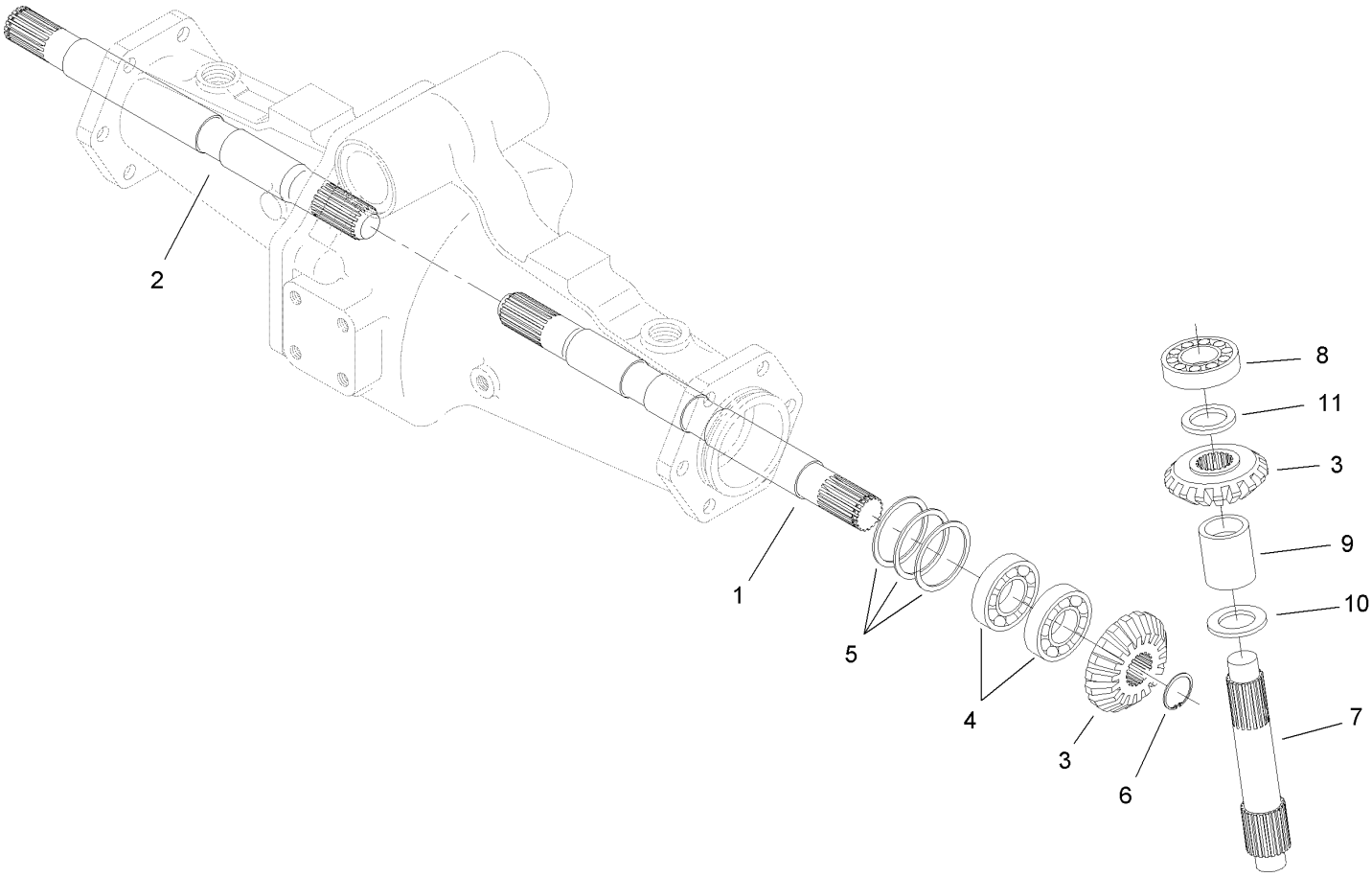

Bevel Gear Shaft Assembly
Rear Axle Assembly No. 110-4800

Ref	Part No.	Qty.	Description
1	99-7509	1	Shaft-Differential, LH Gear
2	99-7512	1	Shaft-Differential, RH Gear
3	95-7518	4	Gear-Bevel, 18 Tooth
4	99-7530	4	Bearing-Ball
5	99-7552	2	Shim 0.1
5	99-7553	2	Shim 0.2
5	99-7554	2	Shim 0.5
6	99-7531	2	Clip
7	106-1101	2	Shaft-Gear, Bevel
8	99-7532	2	Bearing-Roller, Taper
9	95-7543	2	Spacer
10	99-7533	2	Collar-Thrust
11	99-7558	2	Collar

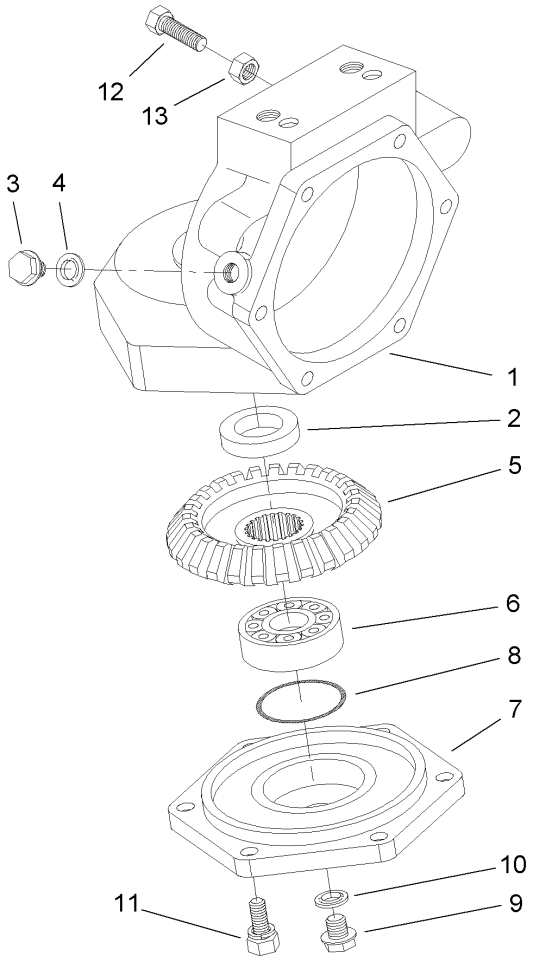

Axle Case Assembly
Rear Axle Assembly No. 110-4800

Ref	Part No.	Qty.	Description
1	106-1100	2	Case-Axle
2	99-7594	2	Seal-Oil
3	99-7535	2	Plug
4	99-7536	2	Washer-Seal
5	95-7528	2	Gear-Bevel, 27 Tooth
6	99-7532	2	Bearing-Roller, Taper
7	95-7526	2	Cover-Axle
8	106-1072	2	O-Ring
9	99-7589	2	Plug
10	99-7590	2	Washer-Seal
11	99-7596	12	Bolt
12	106-1102	2	Bolt-Stop
13	106-1103	2	Nut

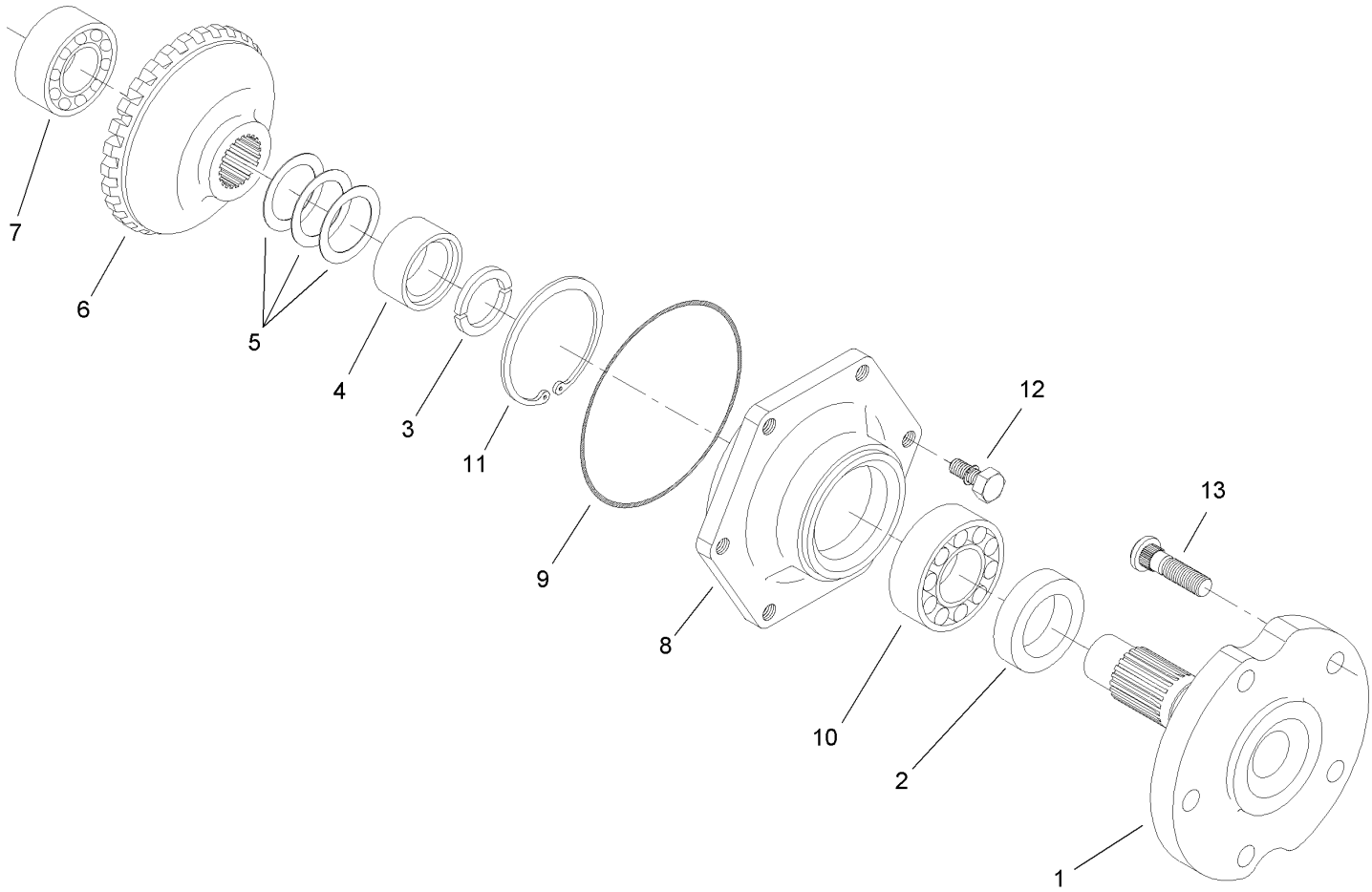

Axle Assembly
Rear Axle Assembly No. 110-4800

Ref	Part No.	Qty.	Description
1	95-7522	2	Axle
2	99-7564	2	Seal-Oil
3	95-7544	4	Clip
4	95-7523	2	Spacer
5	99-7555	2	Shim 0.3
5	99-7556	2	Shim 0.2
5	99-7557	2	Shim 0.5
6	95-7525	2	Gear-Bevel, 27 Tooth
7	99-7534	2	Bearing-Ball
8	95-7521	2	Cover-Axle
9	106-1071	2	O-Ring
10	99-7561	2	Bearing-Ball
11	99-7539	2	Clip
12	99-7596	12	Bolt
13	99-7563	10	Stud

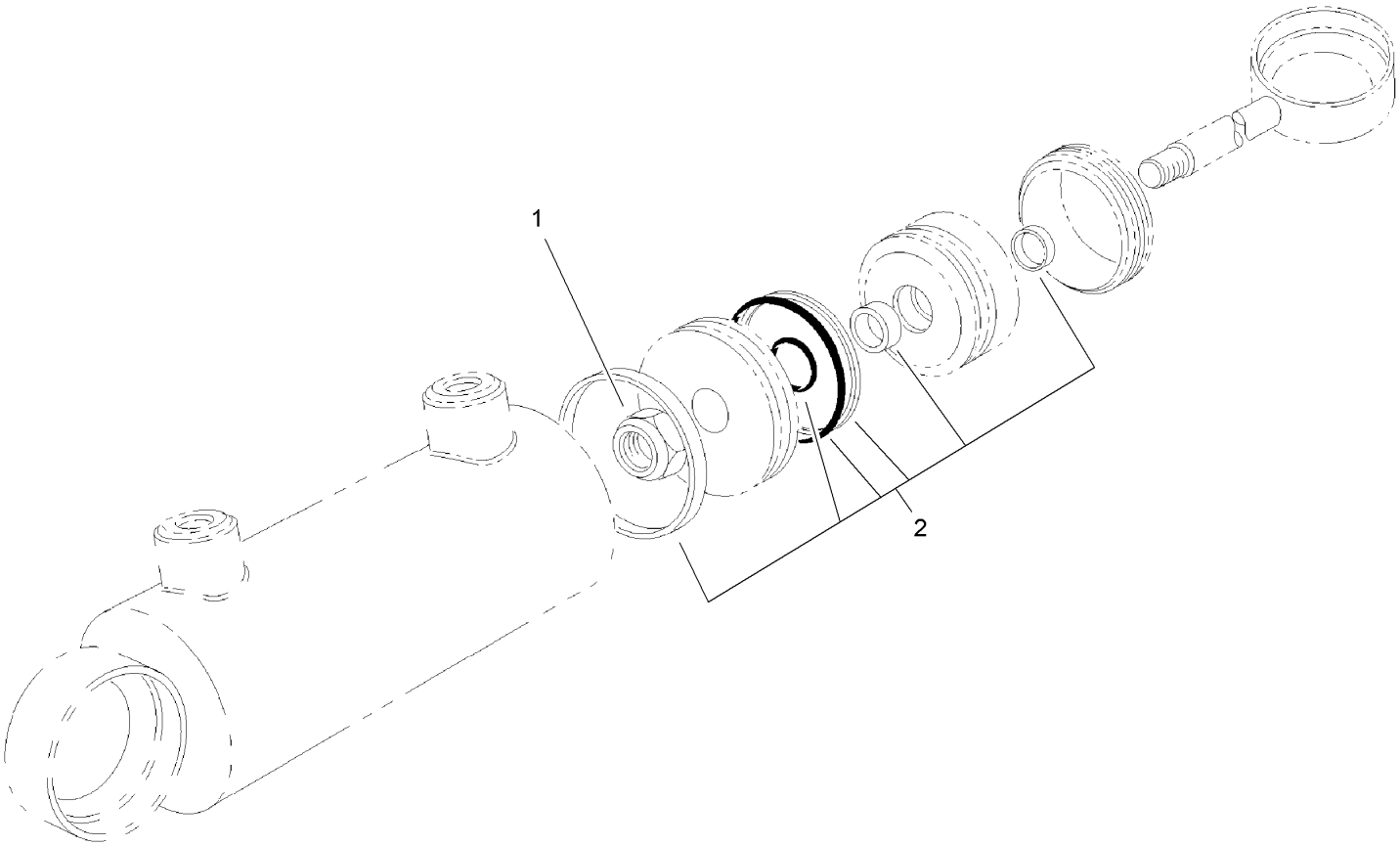

Hydraulic Cylinder Assembly No. 98-8163

Ref	Part No.	Qty.	Description
1	32152-10	1	Locknut
2	100-8022	1	Seal Repair Kit

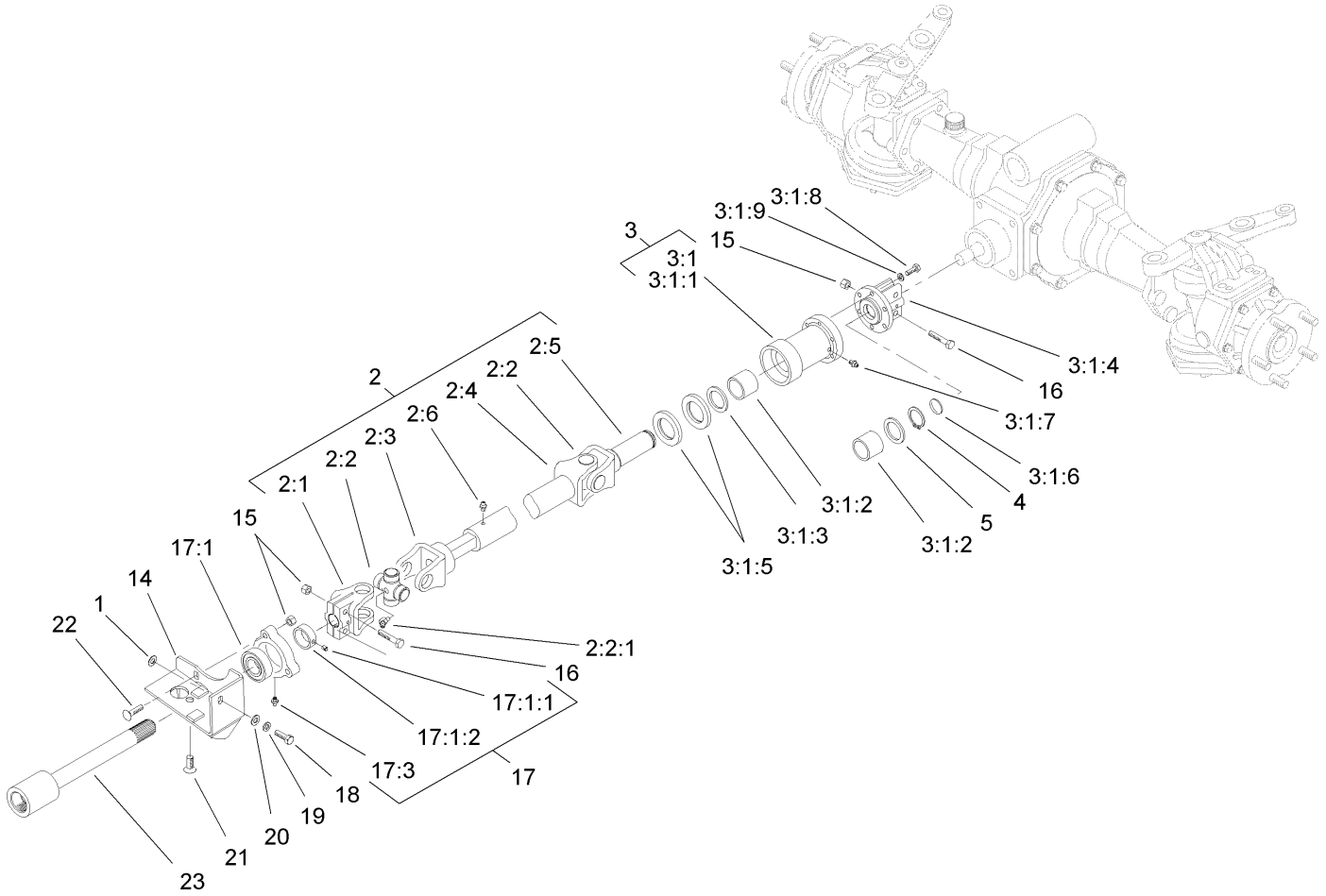

4 Wheel Drive Shaft Assembly

Ref	Part No.	Qty.	Description
1	83-7470	2	Shim
2	99-6976	1	Driveshaft
2:1	54-9090	1	Yoke-End
2:2	54-9180	2	U-Joint Kit
2:2:1	62-3820	1	Fitting-Grease
2:3	104-1693	1	Yoke And Shaft ASM
2:4	83-5260	1	Tube-Yoke, Slip
2:5	72-3440	1	Shaft-Yoke
2:6	302-56	1	Fitting-Grease
❷3		1	Clutch Housing ASM
❷3:1		1	Housing-Clutch
3:1:1	71-4570-03	1	Housing-Clutch, Roller
3:1:2	71-4580	2	Bearing
3:1:3	71-4590	1	Washer-Thrust
3:1:4	76-4690-03	1	Coupling-Axle
3:1:5	253-155	2	Seal-Oil
3:1:6	284-3	1	Plug
3:1:7	302-5	1	Fitting-Grease
3:1:8	3274-8	6	Screw-HSH
3:1:9	3253-3	6	Washer-Lock
4	32151-87	1	Ring-Retaining
5	71-4590	2	Washer-Thrust
14	83-4970-03	1	Bracket-Bearing
15	3296-29	7	Nut-Lock, NI

Ref	Part No.	Qty.	Description
16	322-8	4	Screw-HH
17	76-2460	1	Bearing ASM
17:1	94-3405	1	Bearing-Ball
17:1:1	3245-35	1	Screw-Set
17:1:2	251-77	1	Collar-Lock, Bearing
17:3	302-5	1	Fitting-Grease
18	48-9460	1	Screw-HH
19	42-9850	1	Washer-Lock, Spring
20	48-8030	1	Washer
21	3274-34	1	Screw-HSFH
22	3230-3	3	Screw-CARR
23	83-4900-03	1	Shaft-Traction

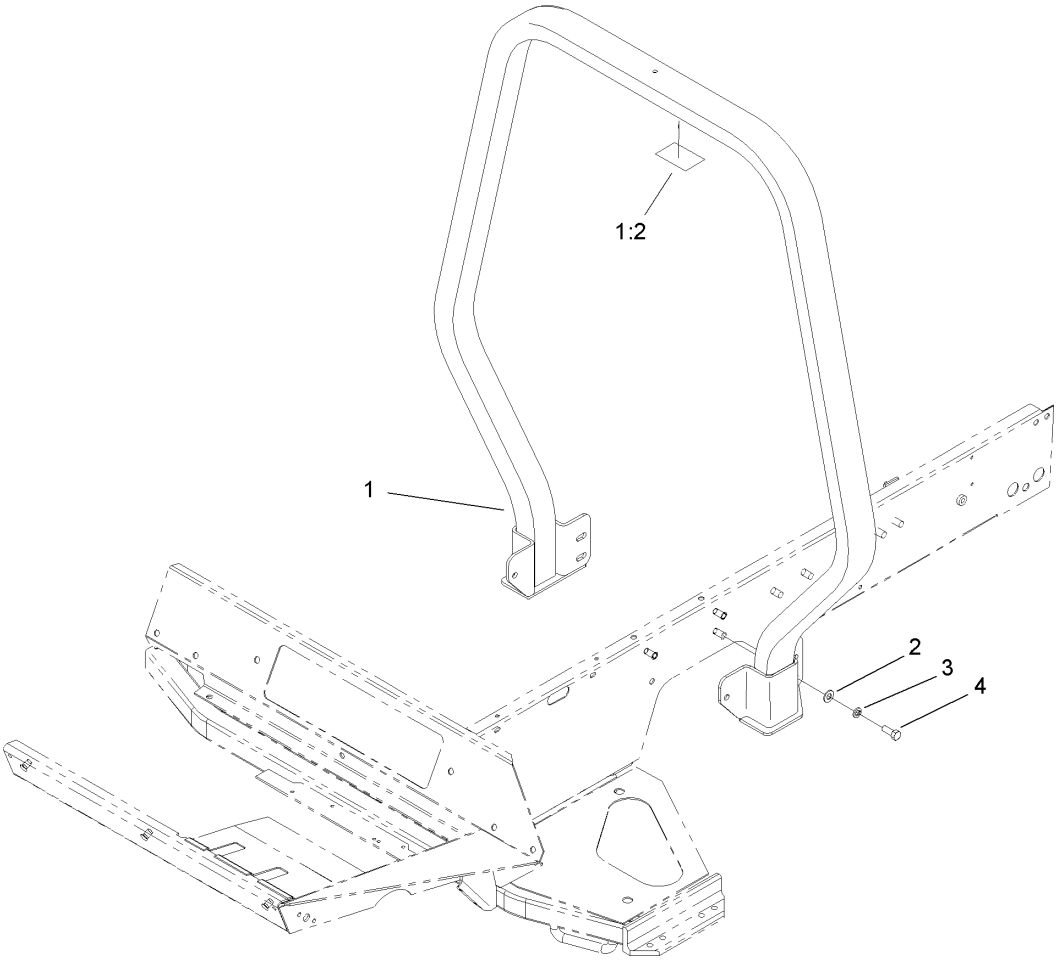

Roll-Over-Protection-System Assembly

Ref	Part No.	Qty.	Description
1	108-4444	1	ROPS ASM
1:2	108-4443	1	Decal-ROPS
2	3256-26	6	Washer-Flat
3	3253-7	6	Washer-Lock
4	325-5	6	Screw-HH

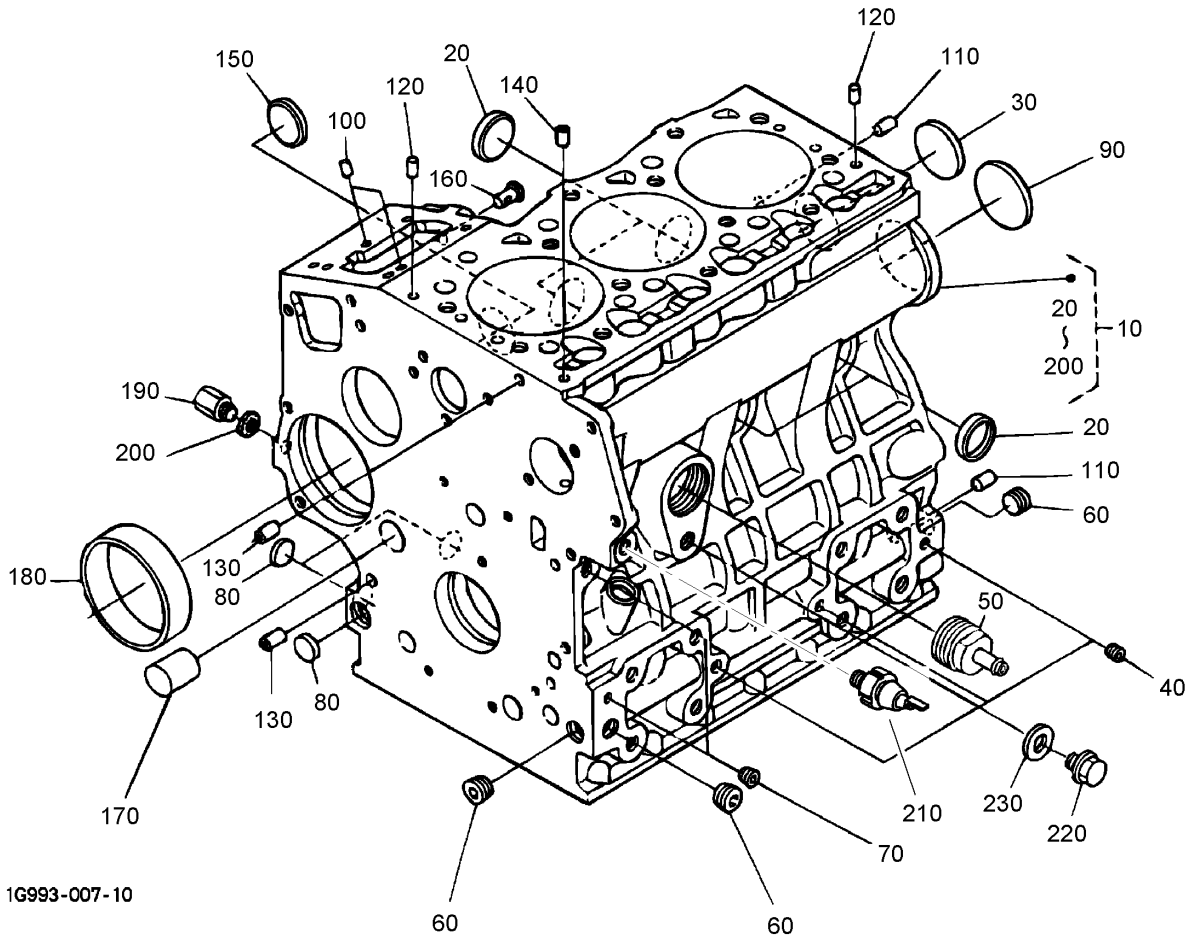

Crankcase Assembly

Ref	Part No.	Qty.	Description
10	107-7824	1	Crankcase ASM
20	98-9398	4	Cap-Sealing
30	98-7539	1	Cap-Sealing
40	98-7540	3	Plug
50	99-8347	1	Joint-Pipe, Drain
60	98-9597	3	Plug
70	98-7487	2	Plug
80	98-7489	3	Plug
90	98-9668	1	Plug
100	98-9375	2	Pin-Straight
110	98-9377	2	Pin-Straight
120	105-3795	2	Pin-Straight
130	98-9387	2	Pin-Pipe
140	98-9539	1	Pin-Pipe
150	98-9599	1	Plug
160	98-9630	1	Pin-Spring, Start
170	98-9675	1	Plug
180	98-9656	1	Bushing-Governor, Gear
190	98-7507	1	Plug
200	98-7428	1	Gasket
210	98-9416	1	Switch-Oil
220	99-3447	1	Plug
230	106-7056	1	Gasket

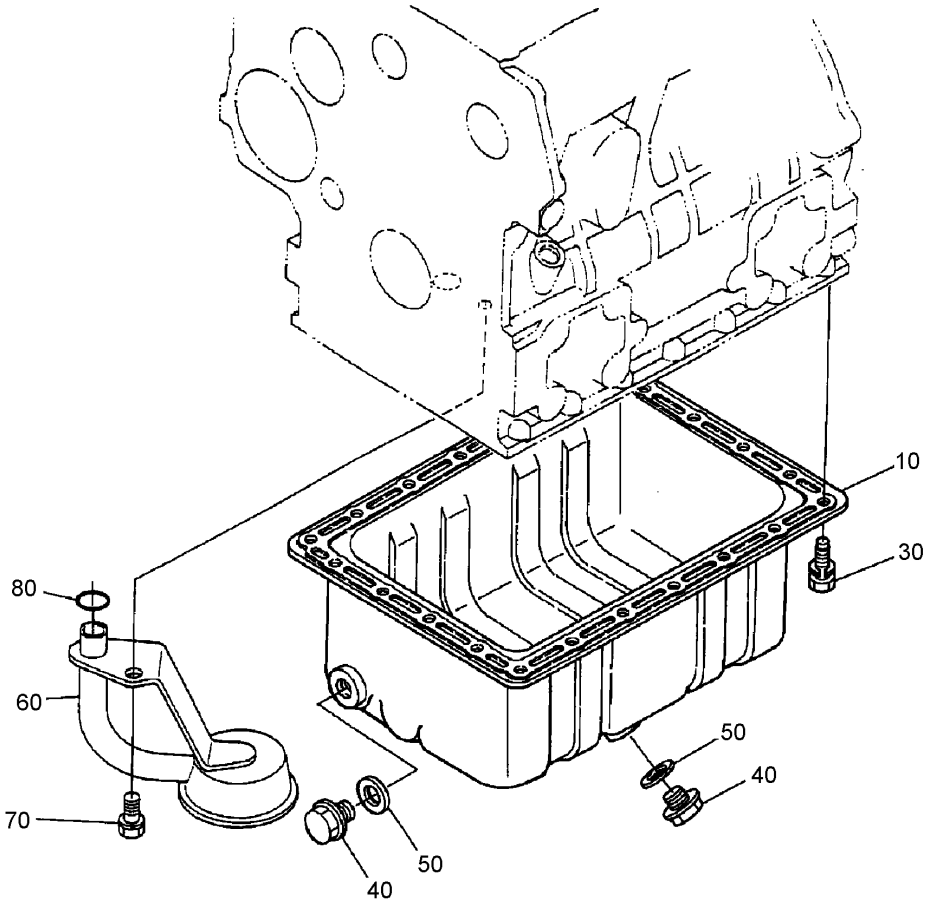

Oil Pan Assembly

Ref	Part No.	Qty.	Description
10	98-9685	1	Drain-Oil
30	107-9065	22	Bolt
40	108-6572	2	Plug-Drain
50	98-7524	2	Gasket
60	108-1401	1	Filter-Oil
70	98-7526	1	Bolt
80	105-3776	1	O-Ring

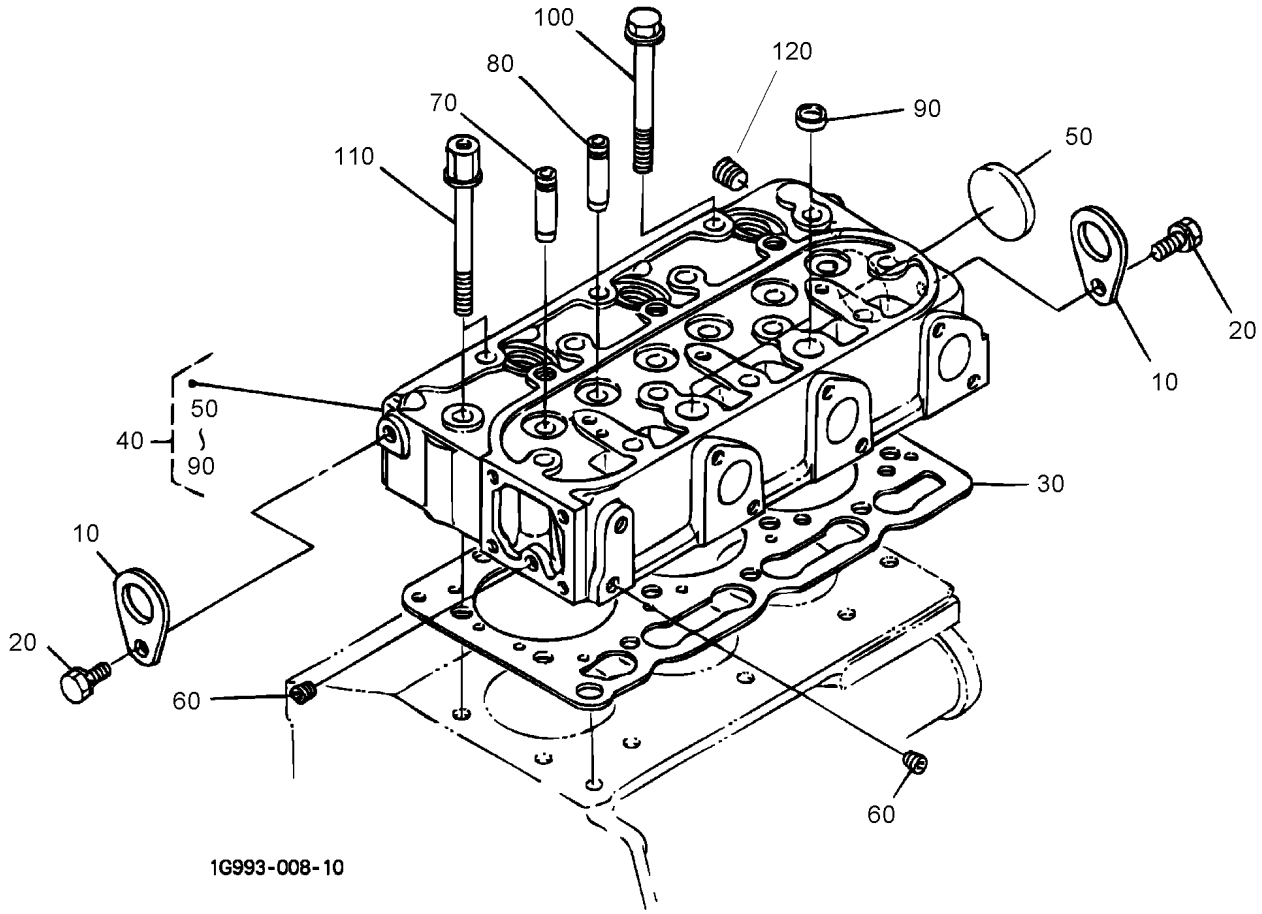

Cylinder Head Assembly

Ref	Part No.	Qty.	Description
10	98-7531	2	Hook-Engine
20	100-9195	2	Bolt
30	105-3780	1	Gasket-Head, Cylinder
40	107-7823	1	Cylinder Head ASM
50	98-9395	1	Cap-Sealing
60	98-7540	2	Plug
70	107-9066	3	Guide-Valve, Inlet
80	107-9067	3	Guide-Valve, Exhaust
90	98-9389	2	Cap-Sealing
100	98-9479	12	Bolt-Head, Cylinder
110	98-9647	2	Bolt-Head, Cylinder
120	98-9444	1	Plug

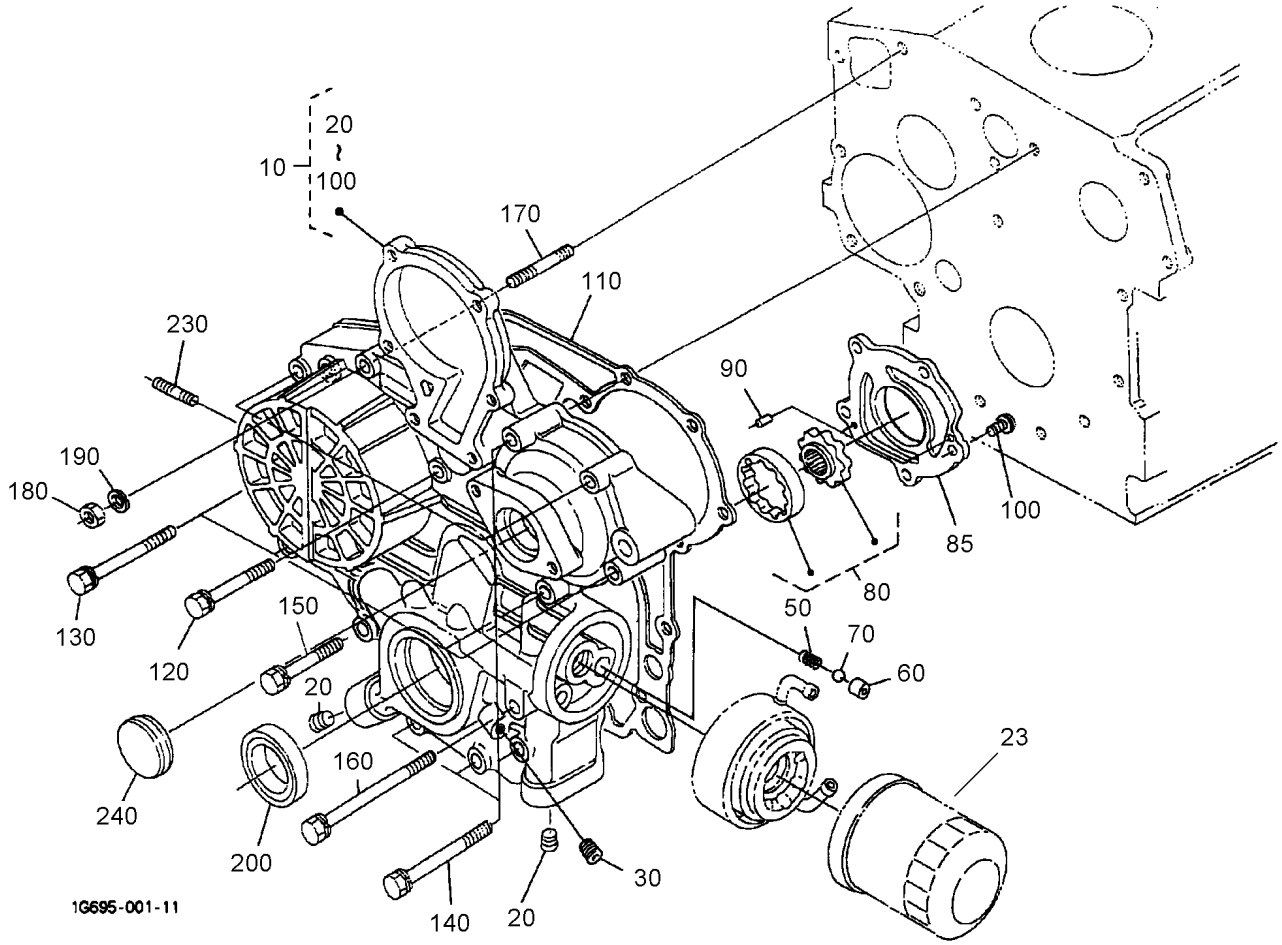

Gear Case Assembly

Ref	Part No.	Qty.	Description
10	108-1402	1	Gear Case ASM
20	98-9598	2	Plug
23	104-5167	1	Filter-Oil
30	98-7487	1	Plug
50	98-9544	1	Spring
60	98-9543	1	Seat-Valve
70	98-9380	1	Ball
80	98-9540	1	Oil Pump Rotor ASM
85	107-9069	1	Cover-Pump, Oil
90	107-9072	2	Pin-Straight
100	107-9071	5	Screw
110	98-9633	1	Gasket-Case, Gear
120	107-9073	3	Bolt
130	105-3797	4	Bolt
140	98-9356	4	Bolt
150	107-9074	1	Bolt
160	98-9586	1	Bolt
170	105-3709	1	Stud
180	98-7572	1	Nut
190	98-7699	1	Washer-Spring
200	98-9482	1	Seal-Oil
230	105-3710	2	Stud
240	98-9641	1	Cover

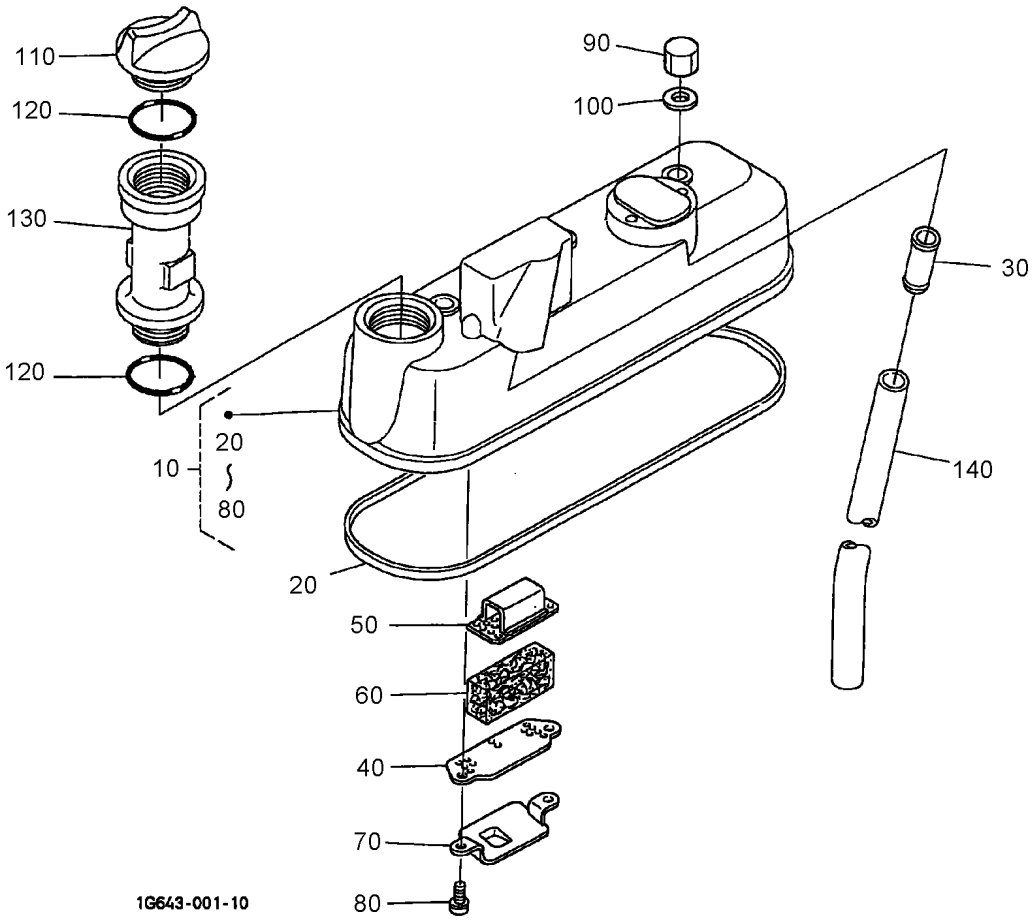

Head Cover Assembly

Ref	Part No.	Qty.	Description
10	98-9614	1	Cylinder Head Cover ASM
20	98-9615	1	Gasket-Cover, Head
30	98-9492	1	Joint-Pipe, Breather
40	98-9488	1	Plate-Element, Breather
50	98-9489	1	Plate-Element, Breather
60	98-9493	1	Element-Breather
70	98-9490	1	Shield-Oil, Breather
80	98-9364	2	Screw (W/Washer)
90	98-9455	3	Nut-Cap
100	98-9454	3	Gasket
110	107-9075	1	Plug-Filler, Oil
120	99-3446	1	O-Ring
130	99-8349	1	Extension-Fill, Oil
140	98-9491	1	Pipe-Breather

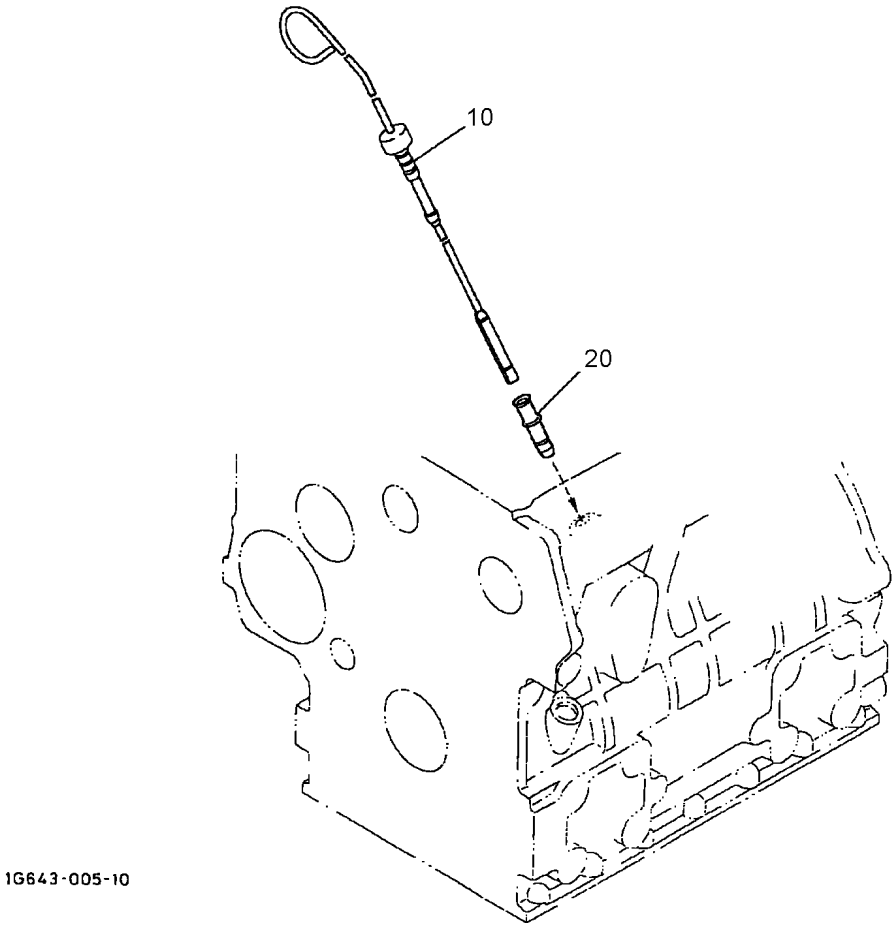

Dipstick and Guide Assembly

Ref	Part No.	Qty.	Description
10	104-9348	1	Gauge-Oil
20	105-3713	1	Guide-Gauge, Oil

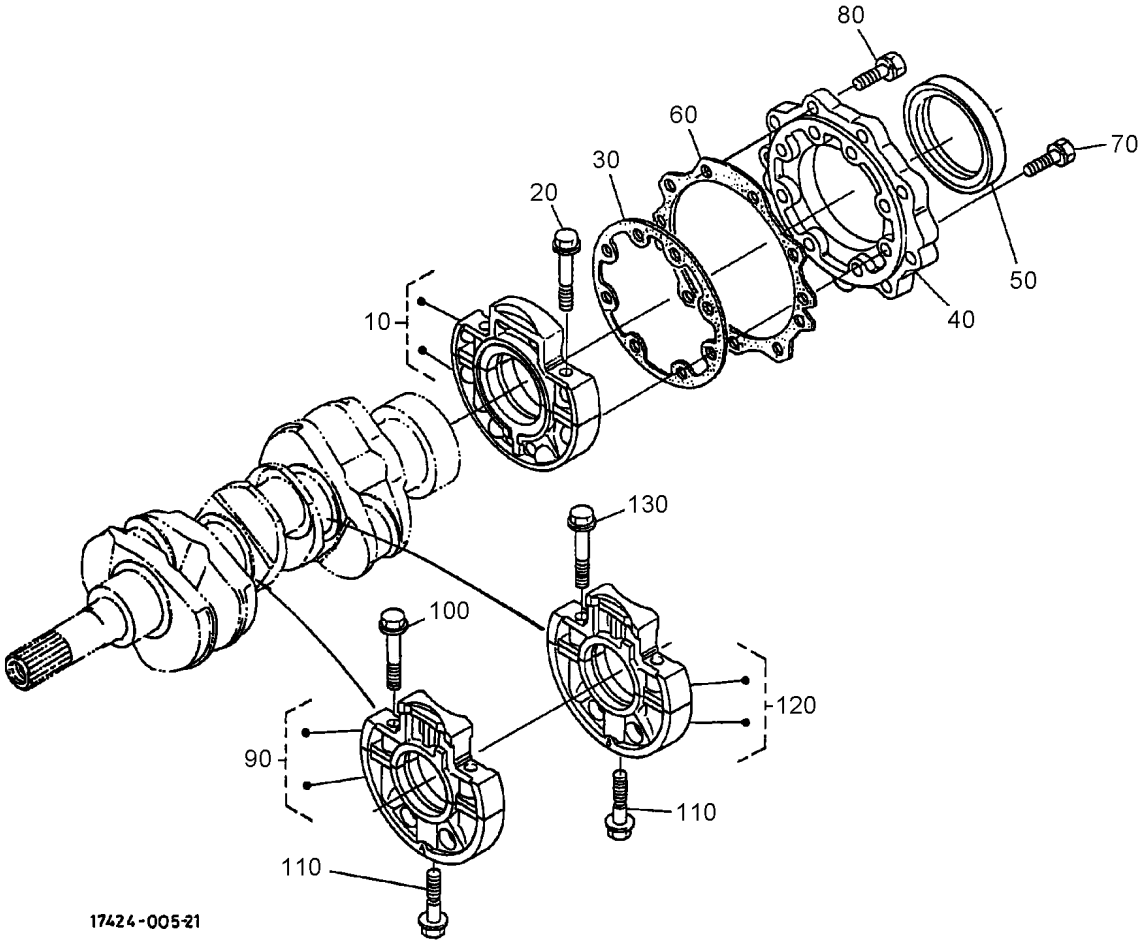

Main Bearing Assembly

Ref	Part No.	Qty.	Description
10	98-9480	1	Main Bearing Case ASM
20	98-9484	2	Bolt-Case, Bearing
30	98-9634	1	Gasket-Case, Bearing
40	98-9487	1	Cover-Case, Bearing
50	98-9483	1	Seal-Oil
60	98-9635	1	Gasket-Cover, Bearing Case
70	98-9352	8	Bolt
80	98-7568	9	Bolt
90	99-8361	1	Case-Bearing, Main
100	98-9484	2	Bolt-Case, Bearing
110	98-9485	2	Bolt-Case, Bearing
120	99-8360	1	Case-Bearing, Main
130	98-9484	2	Bolt-Case, Bearing

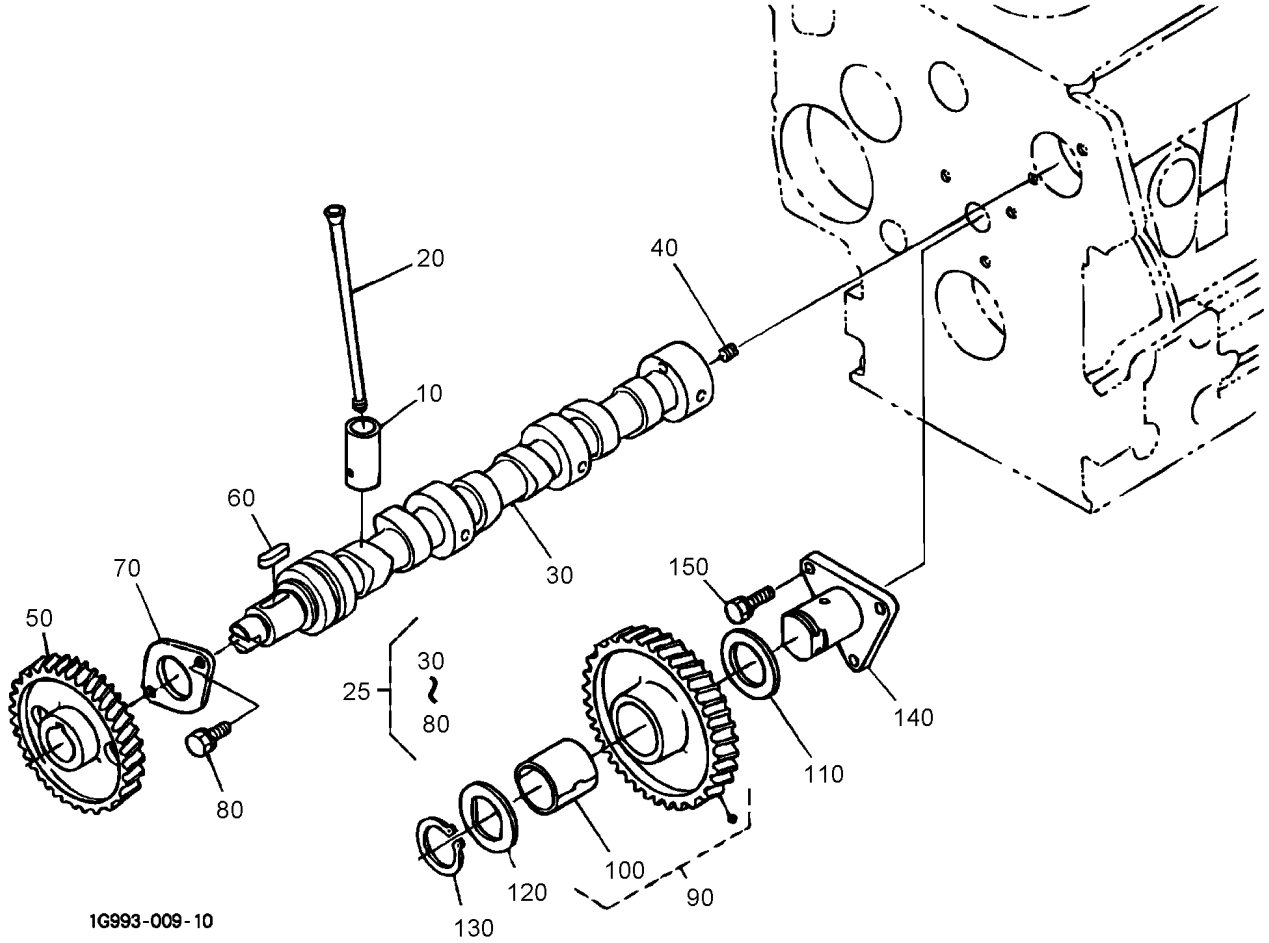

Camshaft and Idle Gear Shaft Assembly

Ref	Part No.	Qty.	Description
10	98-9616	6	Tappet
20	98-9509	6	Rod-Push
25	99-8362	1	Camshaft ASM
30	108-1403	1	Camshaft
40	98-7449	1	Screw-Set
50	98-9512	1	Gear-Cam
60	98-9378	1	Key-Feather
70	98-9510	1	Stopper-Camshaft
80	98-7692	2	Bolt
90	98-9649	1	Idle Gear ASM
100	98-9650	1	Bushing-Gear, Idle
110	98-9535	1	Collar-Gear, Idle
120	98-9536	1	Collar-Gear, Idle
130	98-9534	1	Clip-Circular, Idle Gear
140	98-9533	1	Shaft-Gear, Idle
150	98-7692	3	Bolt

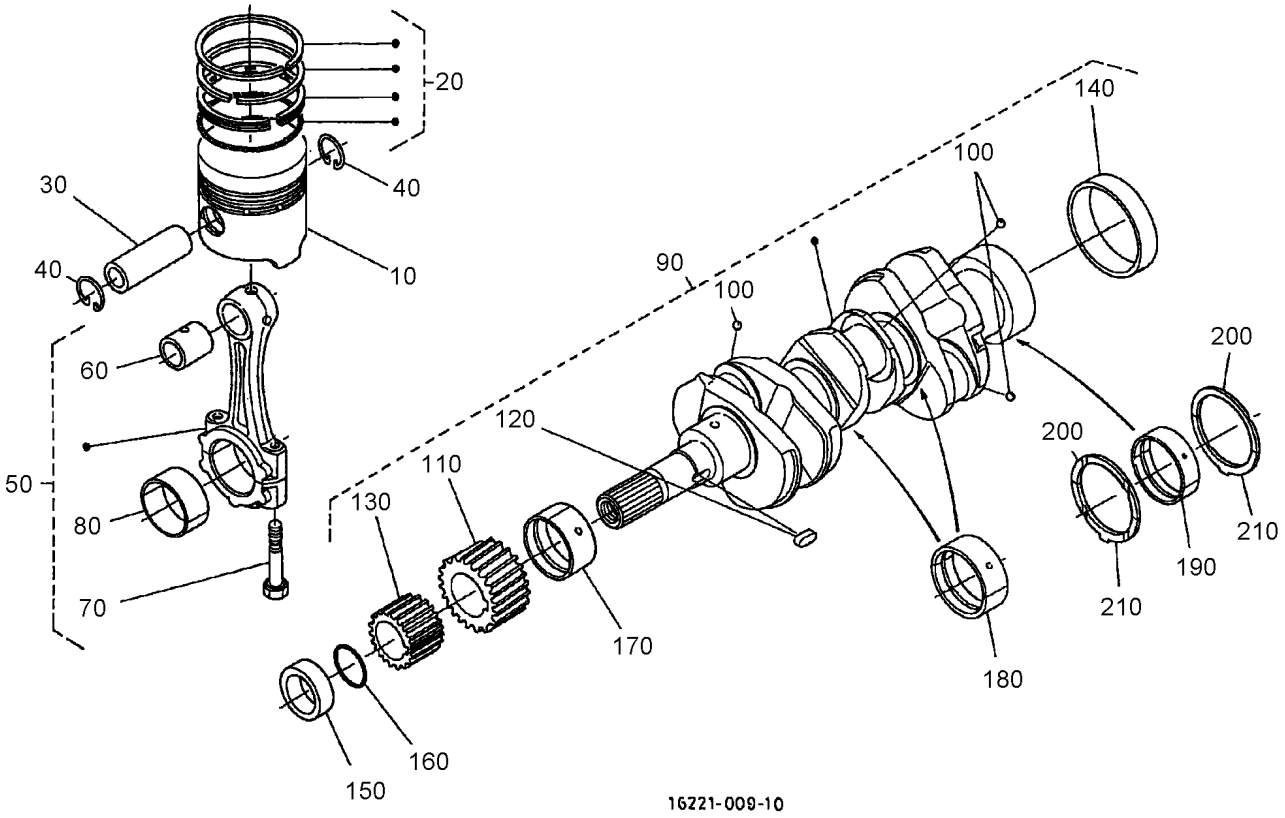

Piston and Crankshaft Assembly

Ref	Part No.	Qty.	Description
10	98-9550	3	Piston (STD)
10	108-1417	3	Piston, 0.5Mm
20	108-1404	3	Piston Ring ASM (0.5Mm)
20	98-9551	3	Piston Ring ASM (STD)
30	98-9513	3	Pin-Piston
40	98-9514	6	Clip-Circular, Piston Pin
50	98-9552	3	Connecting Rod ASM
60	98-9515	3	Bushing-Pin, Piston
70	98-9517	6	Bolt-Rod, Connecting
80	108-1406	3	Metal-Crankpin, -0.4Mm
80	108-1405	3	Metal-Crankpin, -0.2Mm
80	98-9553	3	Bearing-Rod (STD)
90	98-9642	1	Crankshaft ASM
100	98-7473	3	Ball
110	98-9532	1	Gear-Crankshaft
120	98-9666	1	Key
130	98-9542	1	Gear-Drive, Oil Pump
140	98-9522	1	Sleeve-Crankshaft
150	98-9521	1	Collar-Crankshaft
160	105-3783	1	O-Ring
170	98-9554	1	*obs* Bearing-Main (STD)
170	108-1407	1	Metal-Crankpin, -0.2Mm
170	108-1408	1	Metal-Crankpin, -0.4Mm
180	98-9555	2	Bearing-Main (STD)

Ref	Part No.	Qty.	Description
180	108-1409	2	Metal-Crankpin, -0.2Mm
180	108-1410	2	Metal-Crankpin, -0.4Mm
190	98-9556	1	Bearing-Main (STD)
190	105-3719	1	Metal-Crankshaft (.2Mm)
190	105-3720	1	Metal-Crankshaft (.4Mm)
200	98-9413	2	Bearing-Thrust (STD)
200	98-9414	2	Bearing-Thrust (0.2Mm)
200	98-9415	2	Bearing-Thrust (0.4Mm)
210	98-9688	2	Bearing-Thrust (STD)
210	98-9689	2	Bearing-Thrust (0.2Mm)
210	98-9690	2	Bearing-Thrust (0.4Mm)

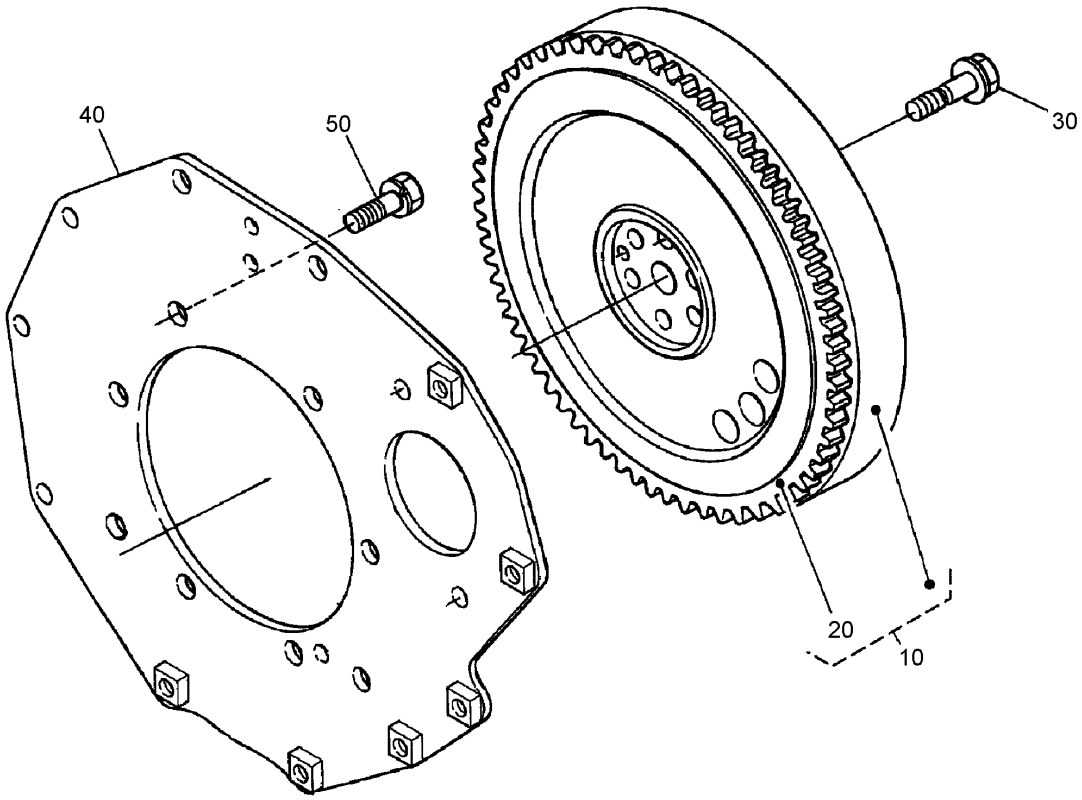

Flywheel Assembly

Ref	Part No.	Qty.	Description
10	105-3784	1	Flywheel ASM
20	105-3722	1	Gear-Ring
30	98-9537	6	Bolt-Flywheel
40	98-9486	1	Plate-End, Rear
50	98-9392	8	Bolt

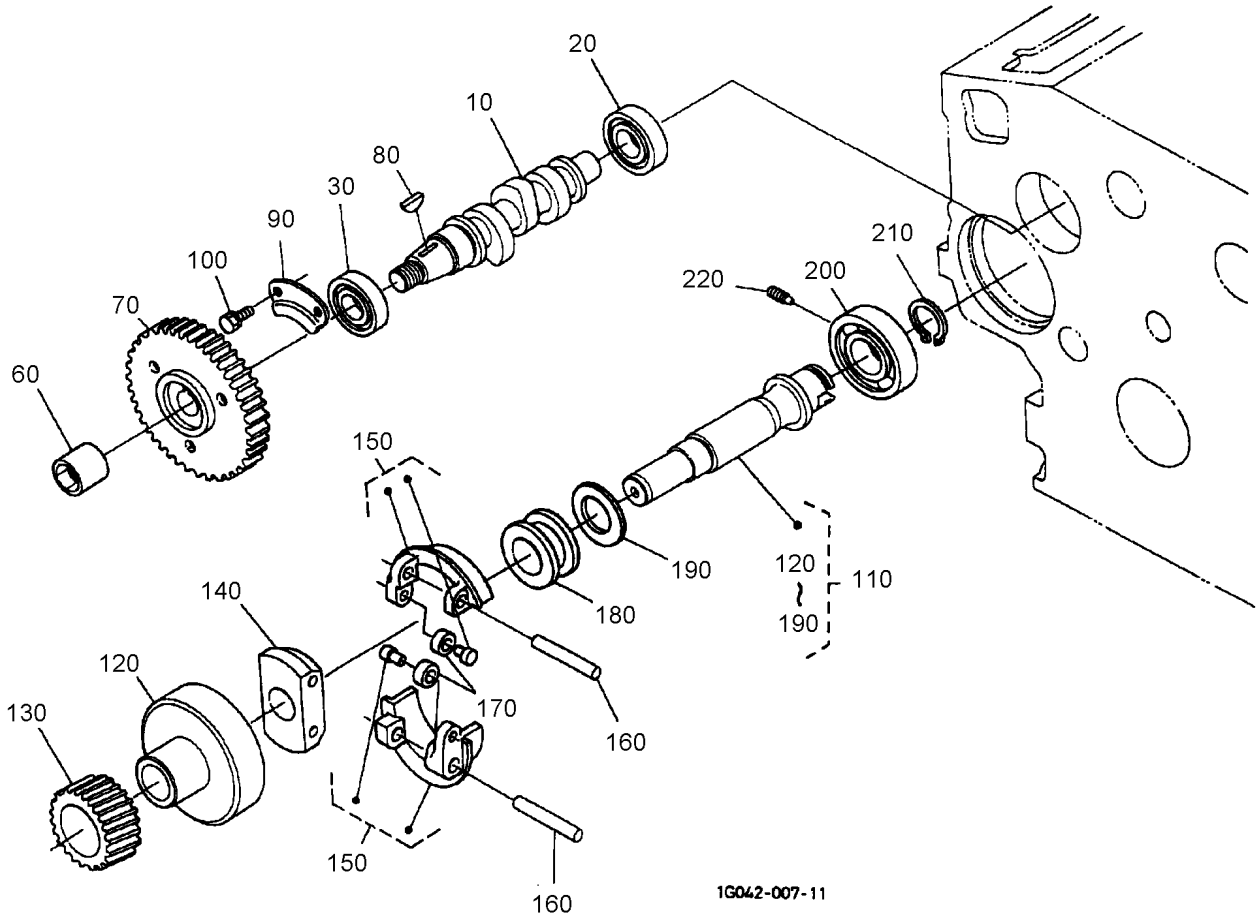

Fuel Camshaft and Governor Shaft Assembly

Ref	Part No.	Qty.	Description
10	98-9459	1	Camshaft-Fuel
20	107-9077	1	Bearing-Ball
30	107-9078	1	Bearing-Ball
60	98-9590	1	Nut-Cap
70	98-9669	1	Gear-Pump, Injection
80	98-9595	1	Key-Woodruff
90	98-9511	1	Stopper-Fuel, Camshaft
100	98-7692	2	Bolt
110	98-9644	1	Governor Shaft ASM
120	98-9562	1	Holder-Gear, Governor
130	98-9673	1	Gear-Governor
140	98-9561	1	Holder-Weight, Governor
150	98-9559	2	Governor Weight ASM
160	98-9560	2	Shaft-Weight, Governor
170	98-9692	2	Roller
180	98-9563	1	Sleeve-Governor
190	98-9564	1	Washer-Thrust
200	107-9079	1	Bearing-Ball
210	98-9657	1	Clip-Circular, Governor Shaft
220	98-9565	1	Screw-Set

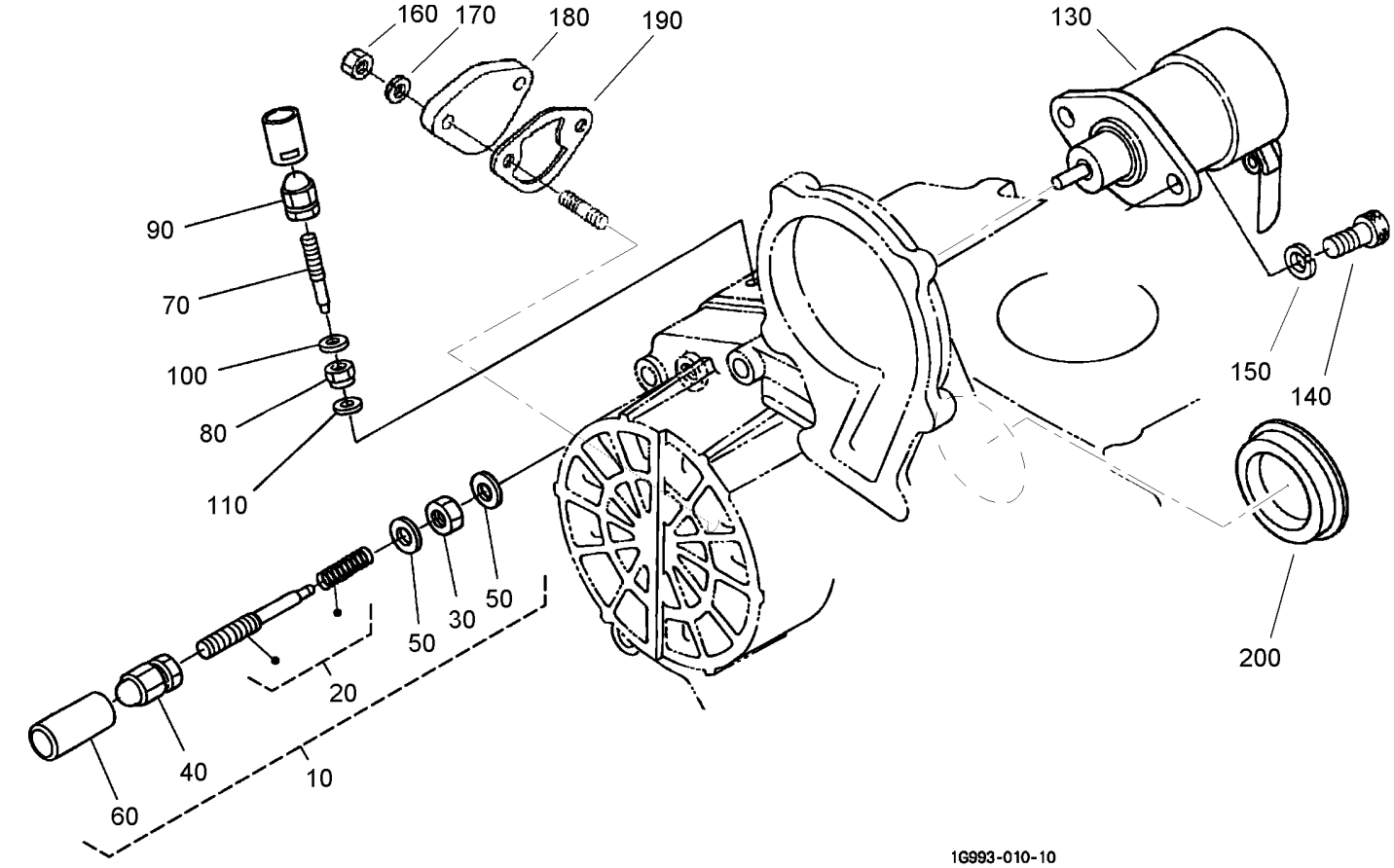

Idle Apparatus Assembly

Ref	Part No.	Qty.	Description
10	98-9678	1	Idle Apparatus ASM
20	98-9679	1	Adjusting Bolt ASM
30	98-9439	1	Nut
40	99-8387	1	Nut-Cap
50	98-7654	2	Gasket
60	98-7656	1	Cap
70	98-9557	1	Bolt-Adjusting
80	99-3512	1	Nut
90	99-8387	1	Nut-Cap
100	98-7654	1	Gasket
110	107-9081	1	Gasket
130	104-5155	1	Solenoid-Stop
140	105-3799	2	Bolt-HSH
150	98-7699	2	Washer-Spring
160	98-7572	2	Nut
170	98-7699	2	Washer-Spring
180	99-3514	1	Cover
190	98-9636	1	Gasket-Pump, Fuel
200	98-9640	1	Cover-Pump

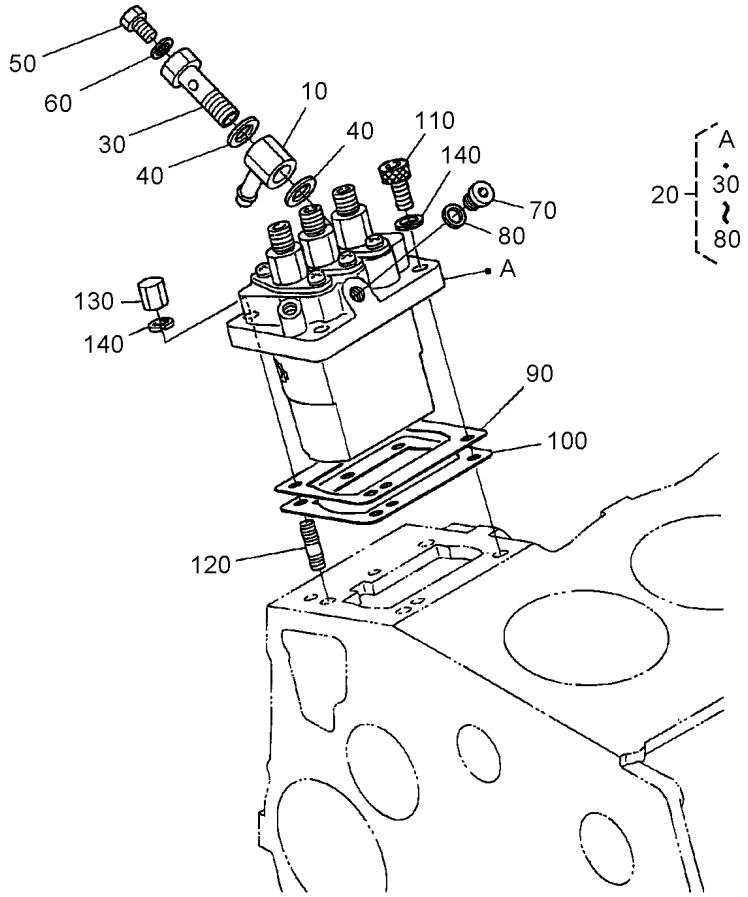

Injection Pump Assembly

Ref	Part No.	Qty.	Description
10	98-9596	1	Joint-Eye
20	98-9643	1	Injection Pump ASM
30	98-9464	1	Bolt-Joint
40	98-9445	2	Gasket
50	98-9430	1	Screw
60	98-9446	1	Gasket
70	98-9466	1	Plug
80	98-9451	1	Gasket
90	98-9457	1	Shim-Injection (0.25Mm)
90	98-9456	1	Shim (0.2Mm)
100	98-9458	1	Shim-Injection (0.30Mm)
110	98-9361	2	Bolt-HSH
120	98-9438	2	Stud
130	98-9440	2	Nut-Cap
140	98-7699	4	Washer-Spring

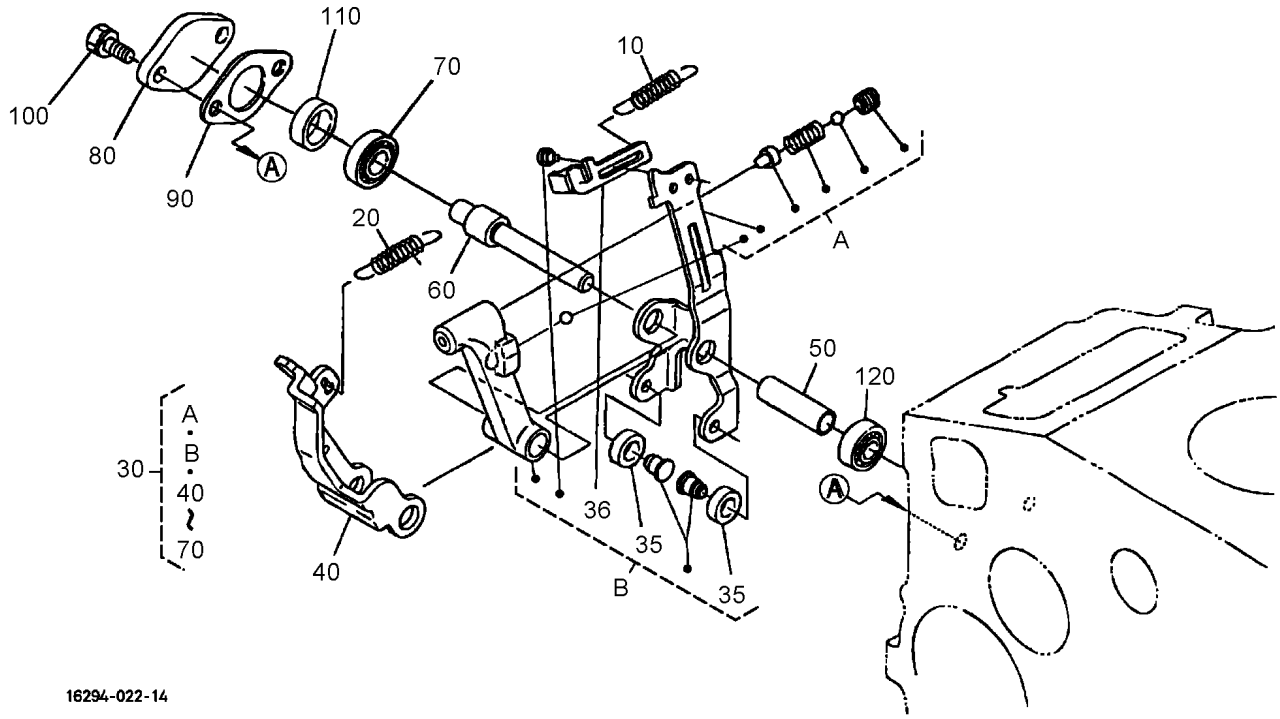

Governor Assembly

Ref	Part No.	Qty.	Description
10	105-3786	1	Spring-Start
20	98-9681	1	Spring-Governor
30	107-9082	1	Fork Lever ASM
35	98-9692	2	Roller
36	107-9083	1	Lever-Thrust
40	107-9084	1	Lever-Fork
50	107-9085	1	Shaft-Lever, Fork
60	107-9086	1	Shaft-Lever, Fork
70	98-9570	1	Bearing-Miniaturize
80	98-9569	1	Cover-Shaft, Fork Lever
90	98-9682	1	Gasket
100	98-9351	2	Bolt
110	98-9567	1	Collar
120	98-9571	1	Bearing-Miniaturize

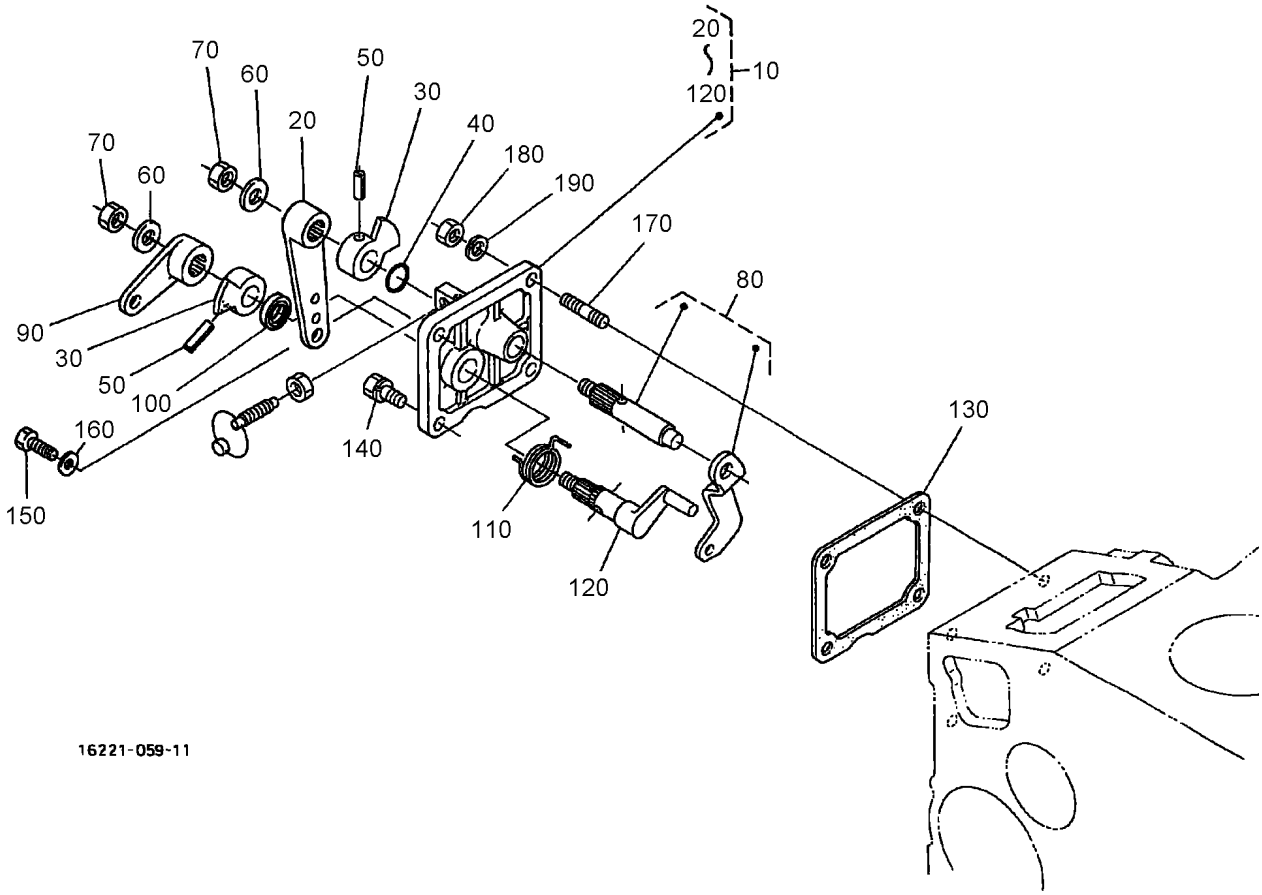

Speed Control Plate Assembly

Ref	Part No.	Qty.	Description
10	105-3735	1	Control Plate ASM
20	98-9662	1	Lever-Control, Speed
30	98-9572	2	Lever-Control, Speed
40	105-3788	1	O-Ring
50	98-7602	2	Pin-Spring
60	98-9594	2	Washer-Plain
70	98-9589	2	Nut
80	98-9658	1	Governor Lever ASM
90	98-9663	1	Lever-Stop, Engine
100	98-7601	1	Seal-Oil
110	98-9472	1	Spring-Return
120	98-9664	1	Shaft-Lever, Stop
130	98-9637	1	Gasket
140	98-7692	1	Bolt
150	99-8348	1	Bolt
160	98-7654	2	Gasket
170	105-3710	2	Stud
180	98-7572	2	Nut
190	98-7699	2	Washer-Spring

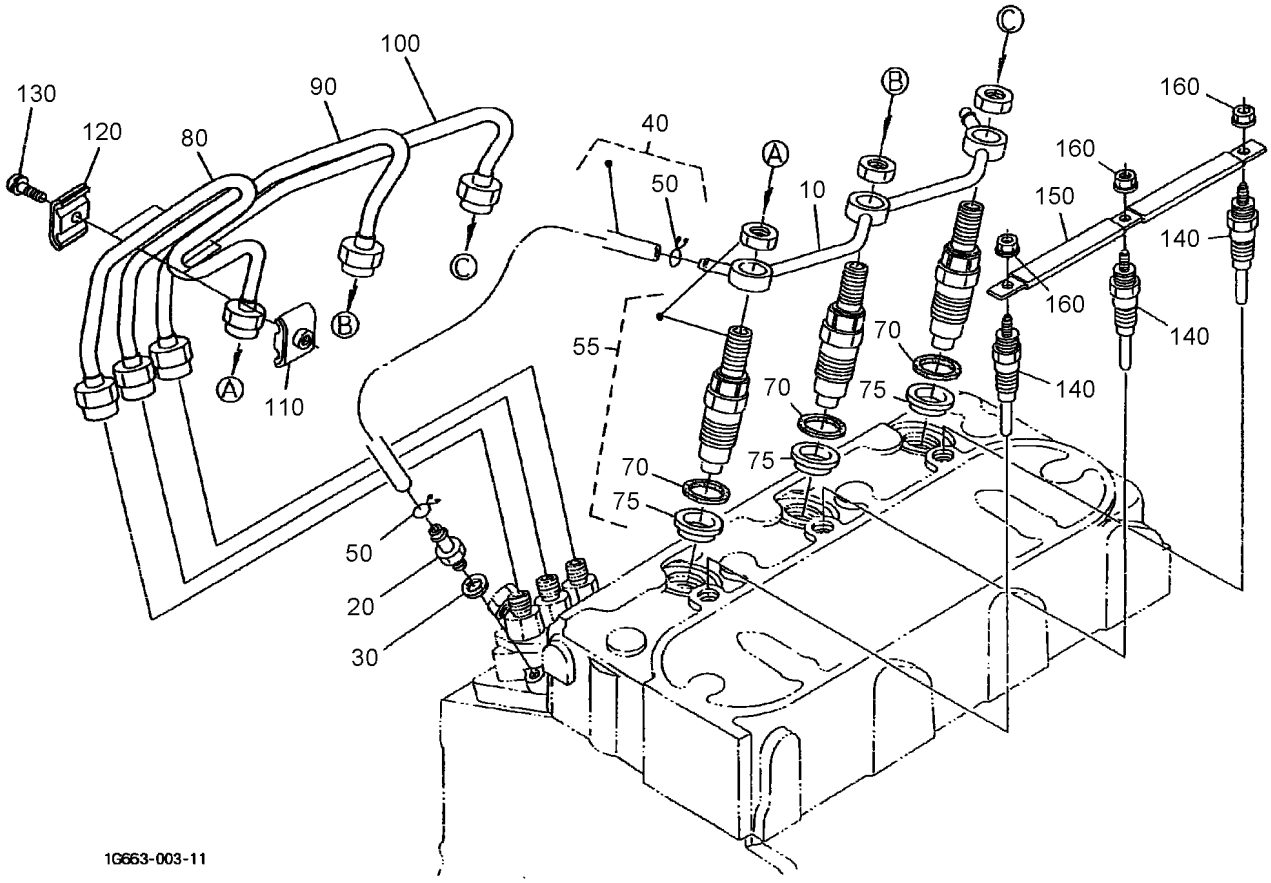

Nozzle Holder and Glow Plug Assembly

Ref	Part No.	Qty.	Description
10	98-9621	1	Overflow Pipe ASM
20	98-9431	1	Screw-Bleeder
30	98-7654	1	Gasket
40	98-9624	1	Overflow Pipe ASM
50	98-7672	2	Clip-Pipe
55	108-2866	3	Nozzle Holder Kit
70	98-7676	3	Gasket
75	98-7677	3	Seal
80	98-9622	1	Pipe-Injection
90	98-9654	1	Pipe-Injection
100	98-9655	1	Pipe-Injection
110	98-7682	2	Clamp-Pipe
120	98-7683	2	Clamp-Pipe
130	98-9364	2	Screw (W/Washer)
140	98-9623	3	Plug-Glow
150	98-9631	3	Cord-Plug, Glow
160	99-8377	3	Nut-Flange

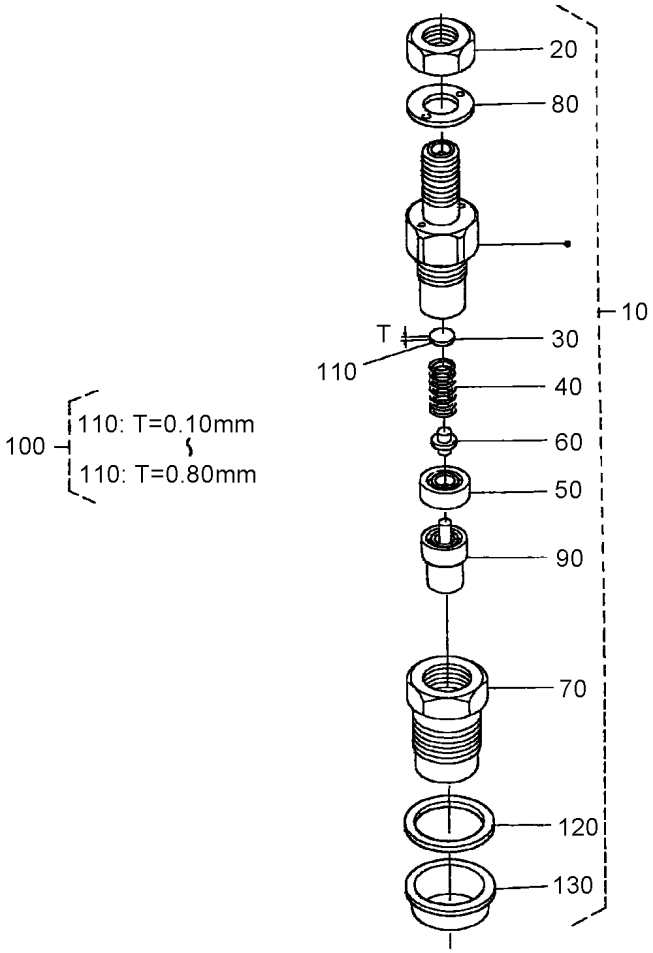

Nozzle Holder (Component Part) Assembly

Ref	Part No.	Qty.	Description
10	108-2866	1	Nozzle Holder Kit
20	99-8301	3	Nut
30	99-8302	3	Washer-Adjusting
40	99-8303	3	Spring-Nozzle
50	99-8304	3	Spacer-Distance
60	99-8305	3	Rod-Push
70	99-8306	3	Nut-Nozzle
80	99-8307	3	Washer-Plain
90	99-8308	3	Piece-Nozzle
100	99-8309	3	Adjusting Washer ASM
110	99-8310	3	Washer-Adjust (0.10Mm)
110	99-8311	3	Washer-Adjust (0.20Mm)
110	99-8312	3	Washer-Adjust (0.30Mm)
110	99-8313	3	Washer-Adjust (0.40Mm)
110	99-8314	3	Washer-Adjust (0.50Mm)
110	99-8315	3	Washer-Adjust (0.52Mm)
110	99-8316	3	Washer-Adjust (0.54Mm)
110	99-8317	3	Washer-Adjust (0.56Mm)
110	99-8318	3	Washer-Adjust (0.58Mm)
110	99-8319	3	Washer-Adjust (0.80Mm)
120	98-7676	3	Gasket
130	98-7677	3	Seal

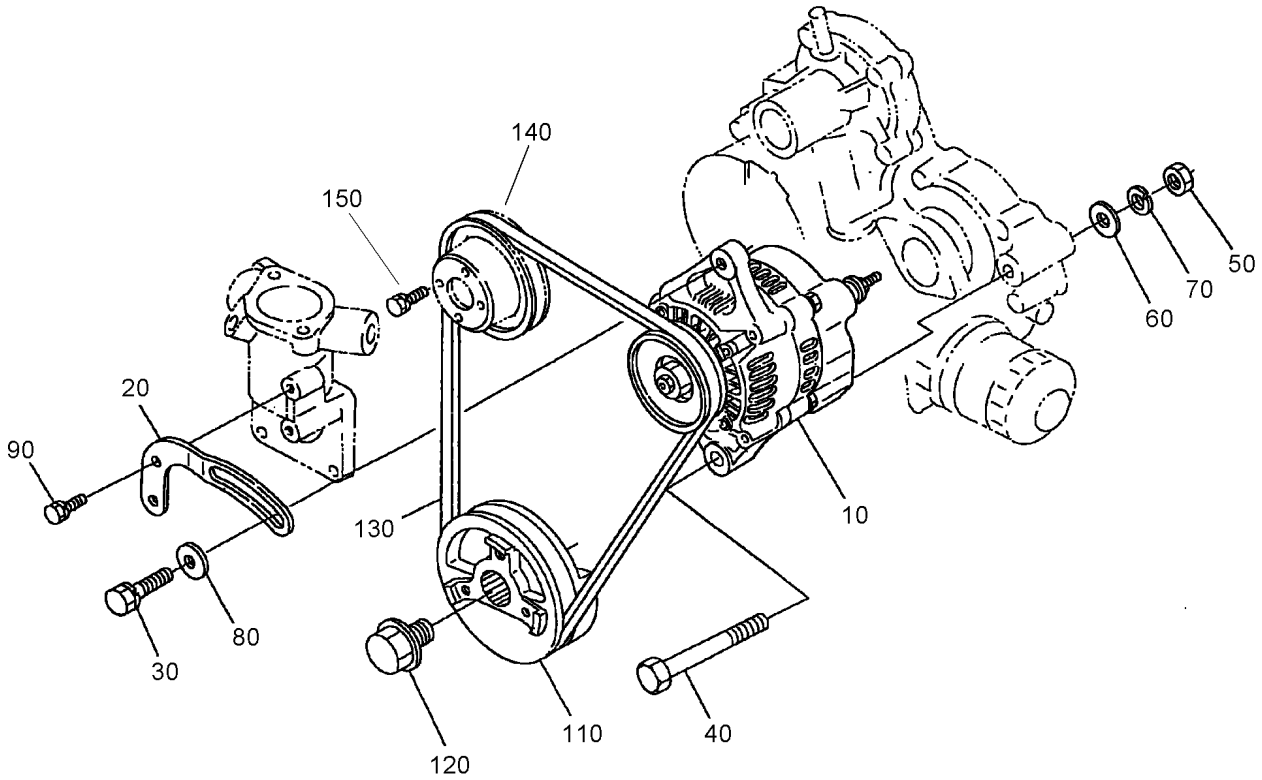

Alternator and Pulley Assembly

Ref	Part No.	Qty.	Description
10	98-9474	1	Alternator ASM
20	98-9573	1	Stay-Dynamo
30	108-7088	1	Bolt
40	98-9360	1	Bolt
50	98-7737	1	Nut
60	3256-24	1	Washer-Flat
70	98-7738	1	Washer-Spring
80	100-9233	1	Washer-Plain
90	98-7692	1	Bolt
110	98-9473	1	Pulley-Drive, Fan
120	98-9585	1	Bolt
130	98-9676	1	V-Belt
140	98-9584	1	Pulley-Fan
150	99-8363	1	Bolt-Flange

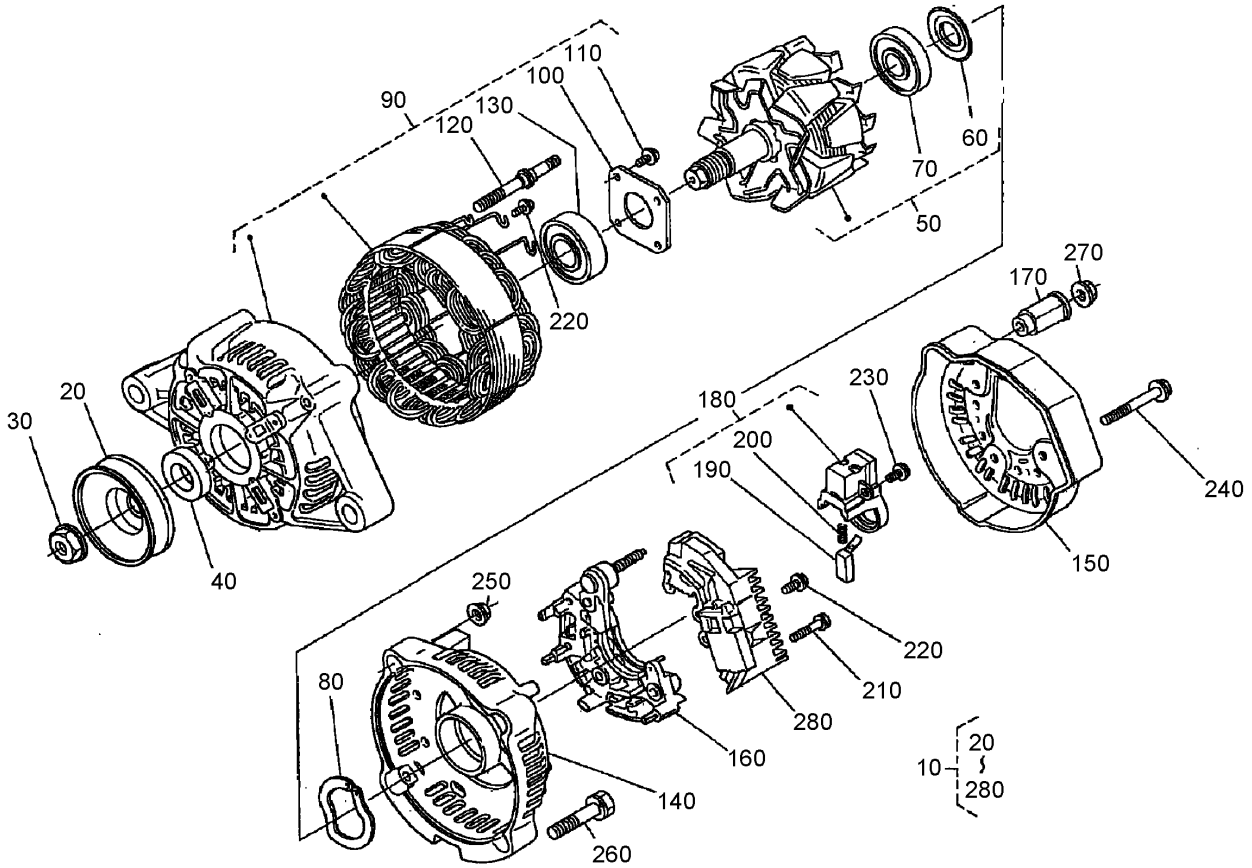

Alternator (Component Part) Assembly

Ref	Part No.	Qty.	Description
10	98-9474	1	Alternator ASM
20	98-9453	1	Pulley-Dynamo
30	98-7708	1	Nut
40	98-7709	1	Collar
50	107-0136	1	Rotor
60	98-7711	1	Cover-Bearing
70	107-0138	1	Bearing-Ball
80	98-7713	1	Washer-Thrust
90	107-0139	1	Drive End Frame ASM
100	98-7715	1	Plate-Retainer
110	98-7716	4	Screw-Head, Round
120	98-7717	2	Bolt-Through
130	107-0137	1	Bearing-Ball
140	107-9087	1	Frame-End
150	107-0140	1	Cover-End
160	98-9476	1	Rectifier ASM
170	98-7722	1	Bushing-Insulation
180	107-0141	1	Holder-Brush
190	98-7724	2	Brush
200	98-7725	2	Spring-Brush
210	98-7726	2	Screw-Head, Round
220	98-7727	6	Screw-Head, Round
230	98-7728	1	Screw-Head, Round
240	98-7729	3	Bolt

Ref	Part No.	Qty.	Description
250	98-7730	2	Nut
260	98-7731	2	Bolt
270	98-7732	1	Nut
280	107-9088	1	Regulator ASM

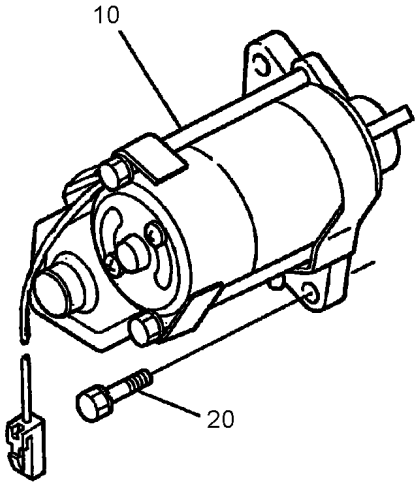

16222-038-10

Start Assembly

Ref	Part No.	Qty.	Description
10	98-9705	1	Starter ASM
20	98-7697	2	Bolt

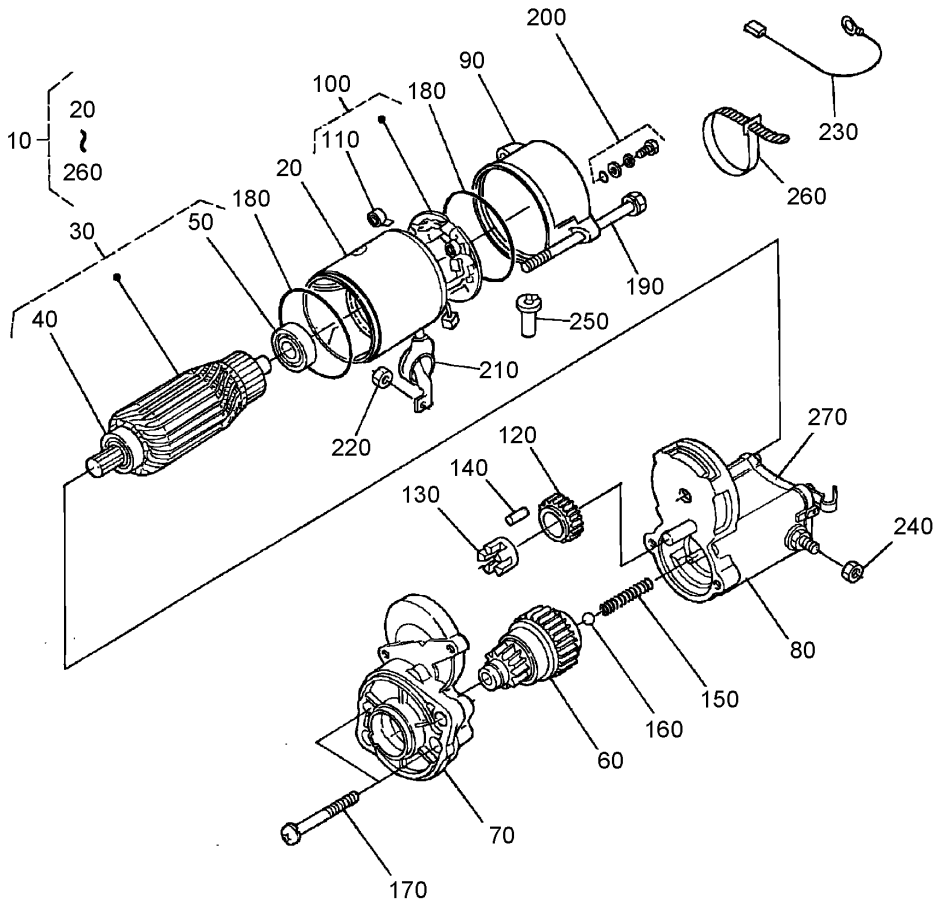

Starter (Component Parts) Assembly

Ref	Part No.	Qty.	Description
10	98-9705	1	Starter ASM
20	104-8608	1	Yoke ASM
30	98-7742	1	Armature ASM
40	98-7744	1	Bearing
50	98-7743	1	Bearing
60	99-8373	1	Clutch-Running, Over
70	99-8374	1	Frame-End, Drive
80	105-3746	1	Magnetic Switch ASM
90	98-7748	1	Frame-End
100	98-7749	1	Brush Holder ASM
110	98-7750	4	Spring-Brush
120	98-7751	1	Gear
130	98-7752	1	Retainer
140	98-7753	5	**obs** Roller
150	98-7754	1	Spring
160	98-7755	1	Ball
170	98-7756	2	Bolt
180	98-7757	2	O-Ring
190	100-9240	2	Bolt
200	98-7758	2	Bolt ASM
210	99-8375	1	Cover
220	99-8371	1	Nut-Hex
230	98-9711	1	Cord-Solenoid, Stop
240	99-8376	1	Nut-Hex

Ref	Part No.	Qty.	Description
250	98-7759	1	Pipe-Drain
260	98-9712	1	Band-Cover
270	105-2886	1	Cover ASM

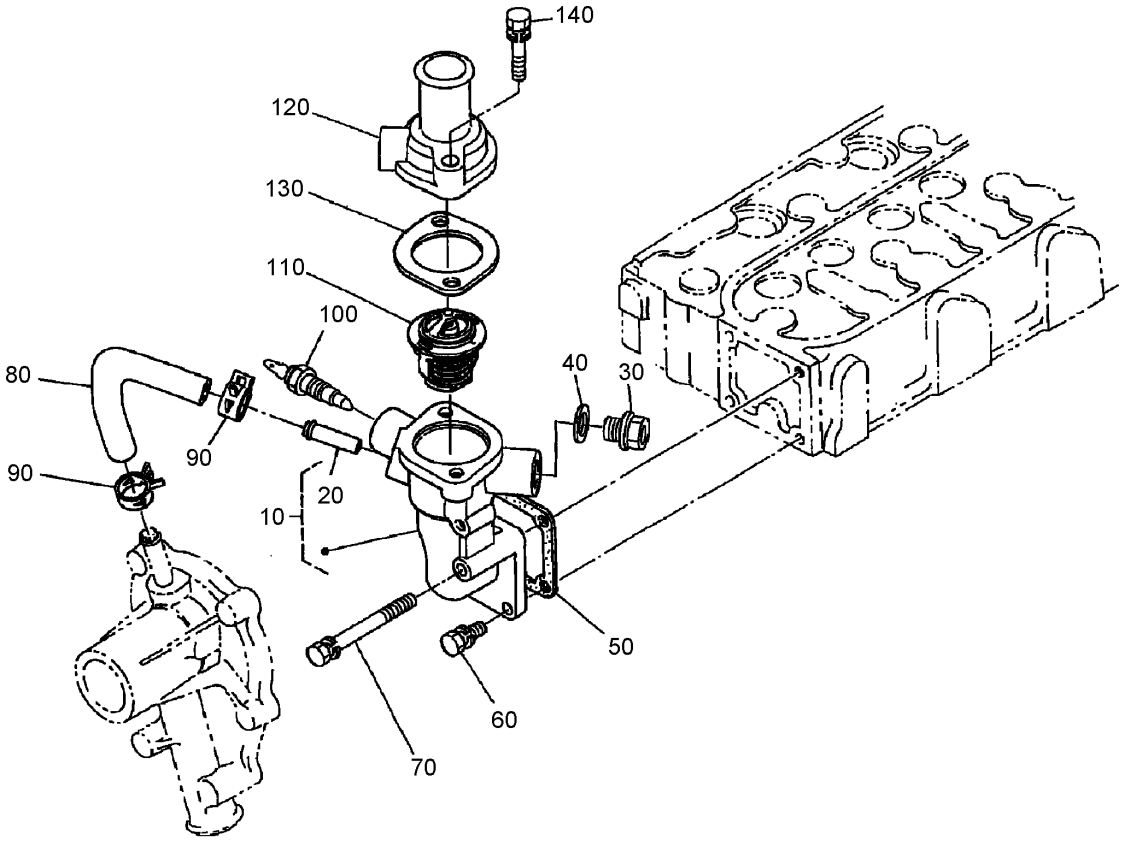

Water Flange and Thermostat Assembly

Ref	Part No.	Qty.	Description
10	98-9713	1	Water Flange ASM
20	98-9580	1	Pipe-Return, Water
30	105-3747	1	Plug
40	99-3583	1	Packing
50	98-9638	1	Gasket-Flange, Water
60	98-7692	3	Bolt
70	98-9356	1	Bolt
80	98-9578	1	Pipe-Return, Water
90	98-9579	2	Band-Pipe
100	98-9719	1	Thermoswitch
110	98-7778	1	Thermostat ASM
120	98-9471	1	Cover-Thermostat
130	105-3748	1	Gasket-Thermostat
140	98-7777	2	Bolt

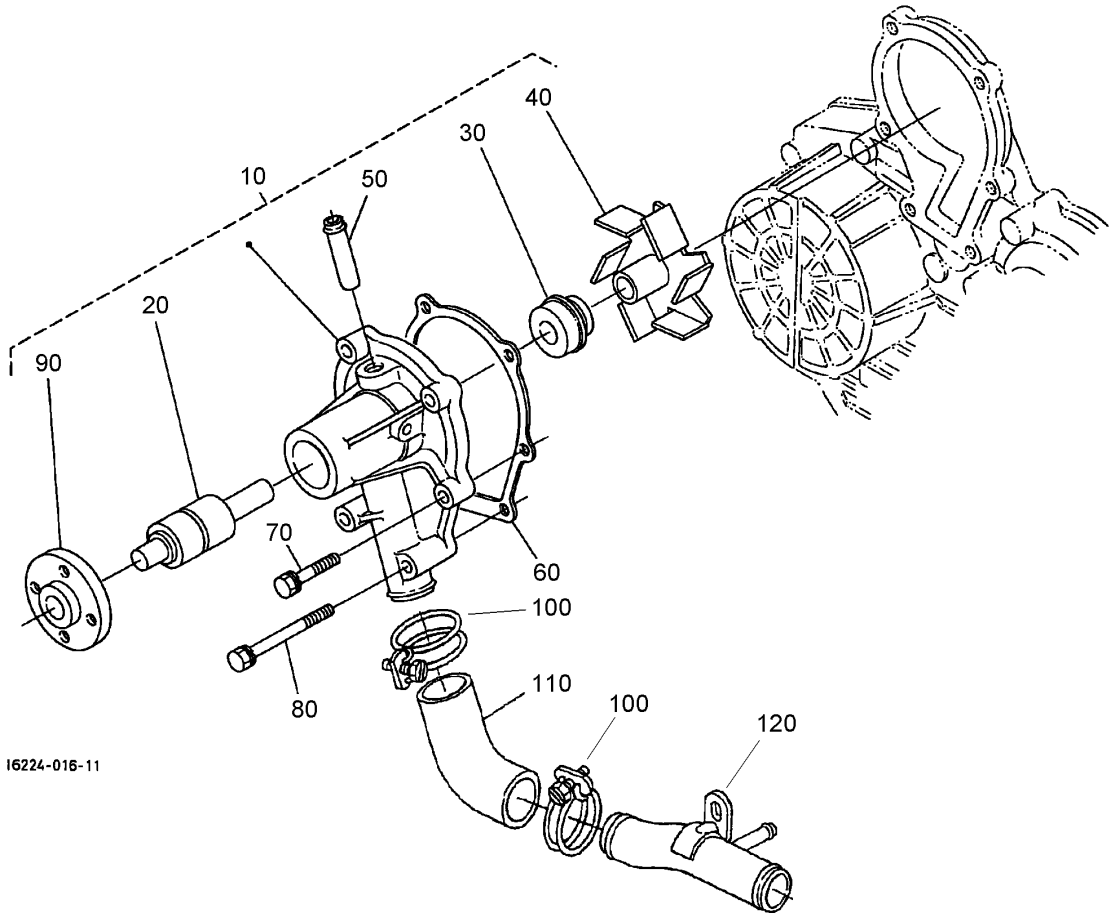

Water Pump and Water Pipe Assembly

Ref	Part No.	Qty.	Description
10	107-9089	1	Water Pump ASM
20	99-3517	1	Bearing-Pump, Water
30	105-3750	1	Mechanical Seal ASM
40	99-3519	1	Impeller-Pump, Water
50	98-9577	1	Pipe-Return, Water
60	99-3454	1	Gasket-Pump, Water
70	98-9353	4	Bolt
80	107-9090	2	Bolt
90	99-3516	4	Flange-Pump, Water
100	98-9717	2	Clamp
110	107-9091	1	Pipe-Water
120	99-8379	1	Pipe-Water

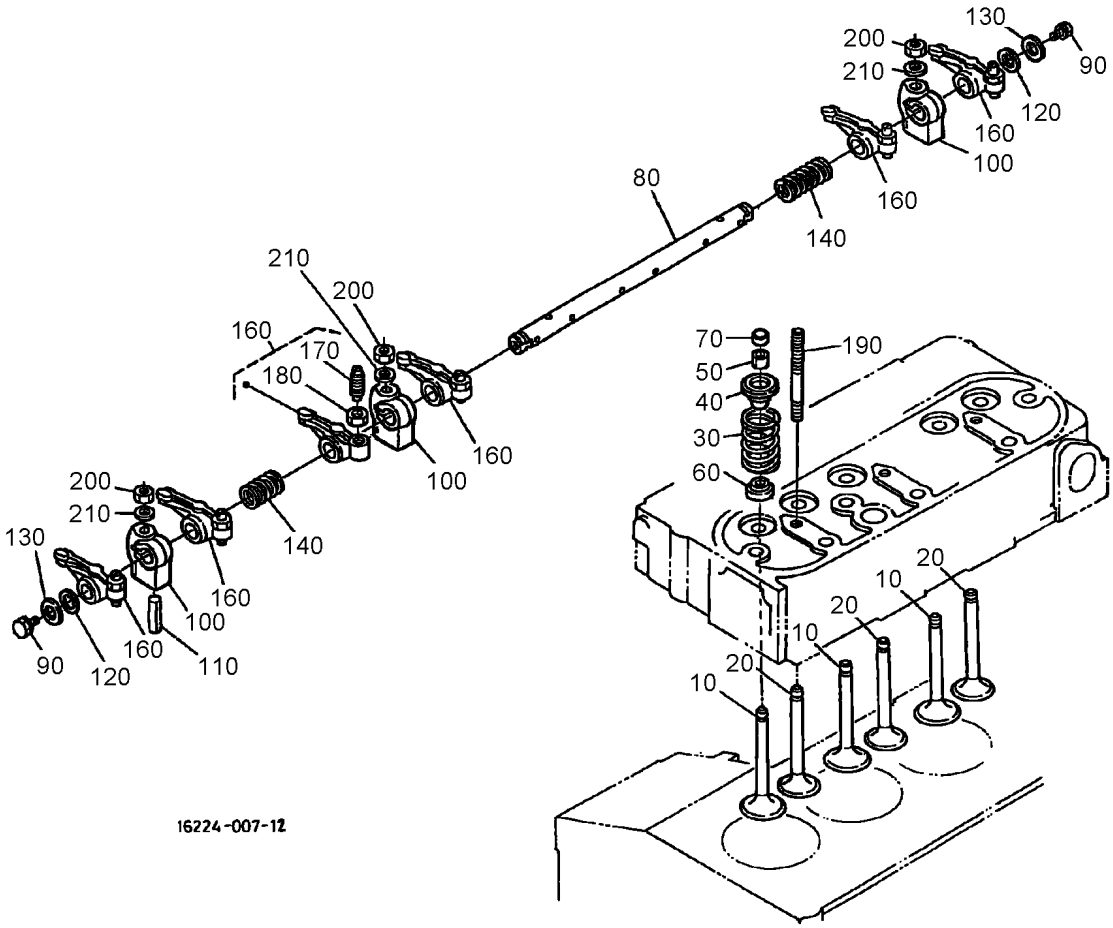

Valve and Rocker Arm Assembly

Ref	Part No.	Qty.	Description
10	98-9494	3	Valve-Inlet
20	98-9625	3	Valve-Exhaust
30	98-9626	6	Spring-Valve
40	107-9092	6	Retainer-Spring
50	98-9390	6	Collet-Set, Valve Spring
60	99-8385	6	Seat-Stem, Valve
70	98-9497	6	Cap-Valve
80	105-3790	1	R-Arm Shaft ASM
90	100-9265	2	Bolt
100	98-9505	3	Bracket-Arm, Rocker
110	105-3758	1	Pin-Spring
120	98-9507	2	Washer-Shaft, R-Arm
130	3256-1	2	Washer-Flat
140	98-9504	2	Spring-Arm, Rocker
160	98-9501	6	Rocker Arm ASM
170	98-9502	6	Screw-Adjusting
180	98-9503	6	Nut
190	98-9506	3	Stud
200	98-9393	3	Nut
210	98-9385	3	Washer-Flat

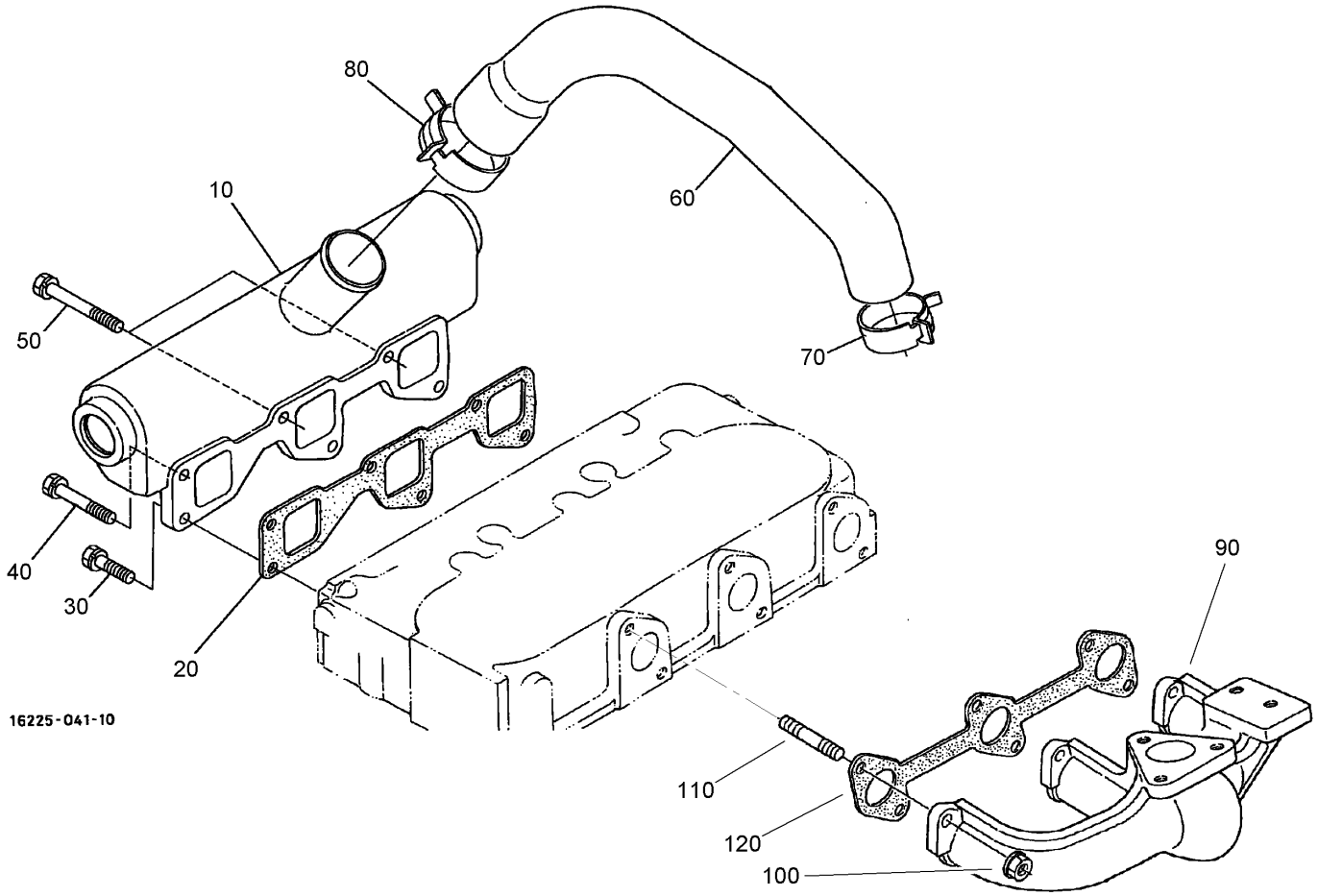

Inlet and Exhaust Manifold Assembly

Ref	Part No.	Qty.	Description
10	99-8321	1	Manifold-Inlet
20	99-8329	1	Gasket-Manifold, Intake
30	98-7568	3	Bolt
40	107-9073	1	Bolt
50	99-8320	2	Bolt
60	99-8323	1	Hose-Inlet
70	99-8324	1	Band-Pipe
80	99-8322	1	Band-Pipe
90	108-1411	1	Manifold-Exhaust
100	98-9665	6	Nut
110	98-9588	6	Stud
120	98-9610	1	Gasket

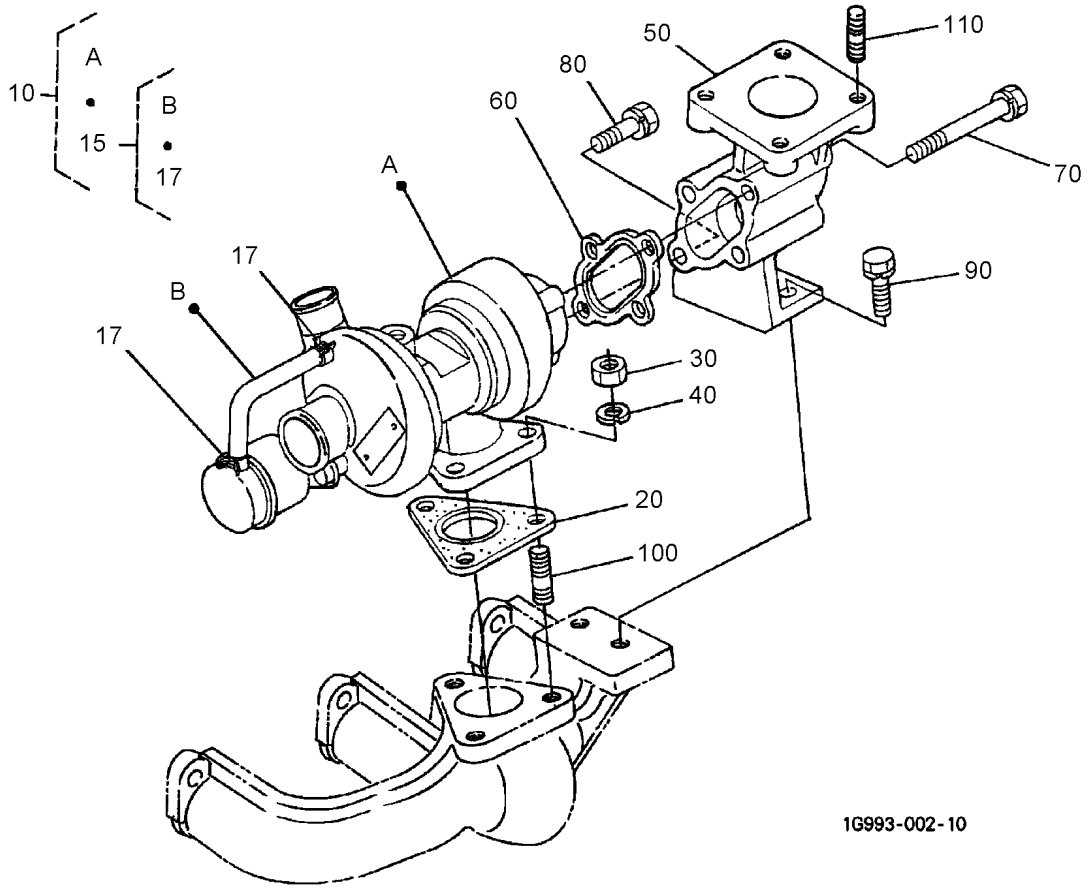

Turbo Charger Assembly

Ref	Part No.	Qty.	Description
10	108-1412	1	Turbo Charger ASM
15	108-1413	1	Hose ASM
17	108-1414	2	Clamp-Hose
20	105-3767	1	Gasket
30	98-7534	3	Nut
40	105-2893	3	Washer-Spring
50	99-8335	1	Flange-Muffler
60	105-3768	1	Gasket
70	105-2894	3	Bolt
80	105-2895	1	Bolt
90	98-7610	2	Bolt
100	99-8341	3	Stud
110	98-7769	4	Stud

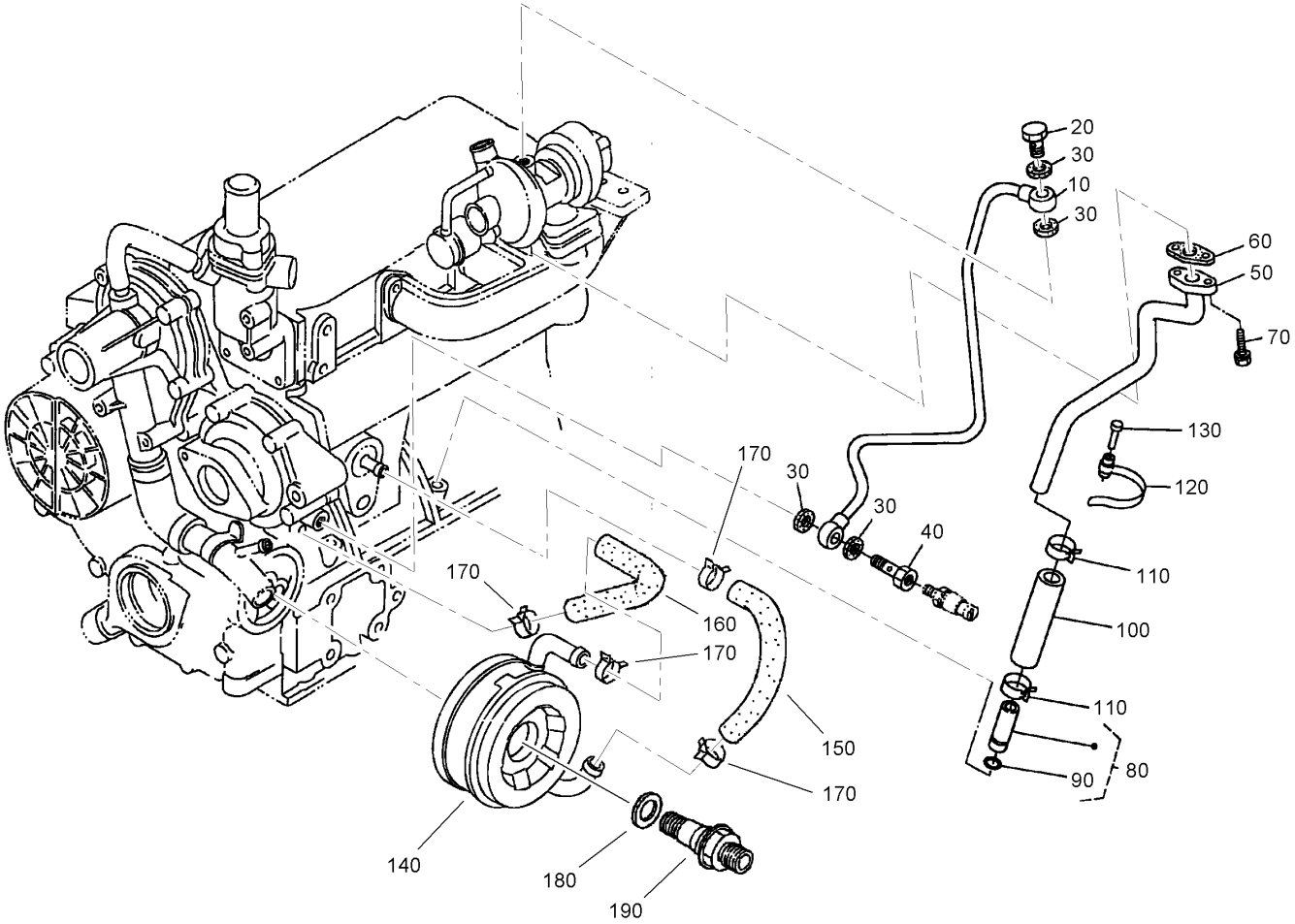

Oil Pipe (Turbo Charger) and Oil Cooler Assembly

Ref	Part No.	Qty.	Description
10	98-9419	1	Oil Pipe ASM
20	98-9418	1	Bolt-Joint, Eye
30	99-8346	4	Gasket
40	98-9417	1	Bolt-Joint, Eye
50	98-9461	1	Pipe Line ASM
60	98-9435	1	Gasket-Oil Return, Turbo
70	98-7605	2	Bolt
80	99-8383	1	Oil Pipe ASM
90	98-9374	1	O-Ring
100	98-9721	1	Pipe-Oil
110	98-9714	2	Clamp-Hose
120	98-9601	1	Clamp-Pipe
130	98-9591	1	Pin-Band
140	104-5158	1	Oil Cooler ASM
150	98-9724	1	Pipe-Cooler, Oil
160	98-9578	1	Pipe-Return, Water
170	98-9579	4	Band-Pipe
180	98-9727	1	Collar
190	104-5159	1	Holder ASM

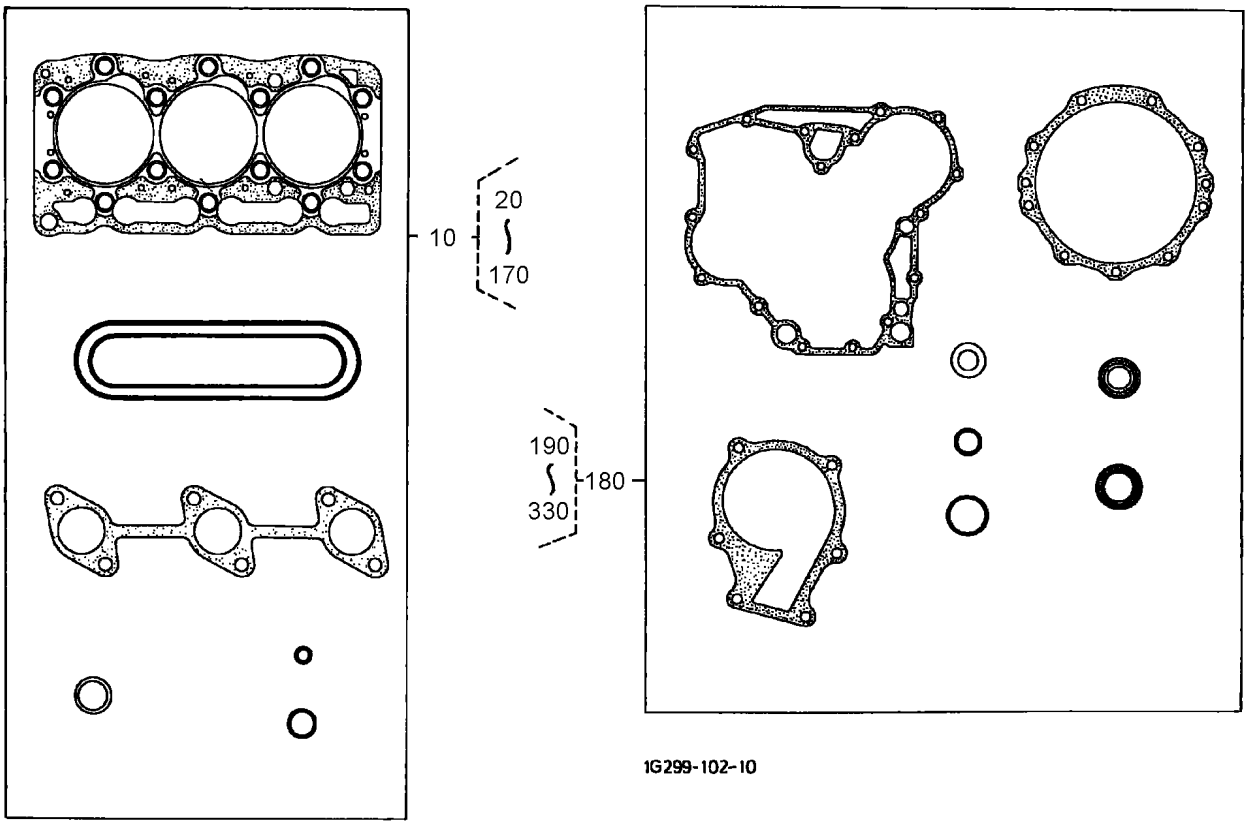

Gasket Kits

Ref	Part No.	Qty.	Description
10	108-1415	1	Upper Gasket Kit
180	108-1416	1	Lower Gasket Kit

Attachments and Accessories

For 03544 - Reelmaster 5400-D 4-Wheel Drive

Product Name	Model/Part
Dethatching Reel ASM	03516
TurfDefender Electronic Leak Detector Kit	03521
5-Blade Cutting Unit	03527
8-Blade Cutting Unit	03528
Grass Basket Kit	03532
Rear Roller Brush Kit	03533
Wheel Weight Kit	104-1478
Shoulder Roller Kit	104-3369
Comb Kit	104-3385
Rear Roller Scraper Kit	104-3395
Front Adjustment Height-of-Cut Kit for Cutting Units	104-8205
Shoulder Roller Scraper Kit	104-8208-03
3 Inch Diameter Collar Kit	104-8215
Back Biased Switch-Lift	105-3367
Step Kit	107-8820
Arm Rest Kit	30707
Tube-Air Cleaner	43-3810
Rear Weight Kit	75-6690
Full Roller Kit	82-6680
High Height-of-Cut Kit	83-5300
Diagnostic Display Box	85-4750
25 lb Weight	98-9780

TORO®