Form Number 3358-437 Rev A

Power Clear
Snowthrower

Model No. 38585 - 280000001 and up.

Parts Catalog

Ordering Replacement Parts

To order replacement parts, please supply the part number, the quantity, and the description of each part desired.

Understanding Reference Numbers

Each Identified part in an illustration has a reference number. The reference number for a part also appears in the parts list, along with other information about the part.

This catalog uses two special reference number formats, one to indicate parts in a service assembly and another to indicate the quantity of a given part in an illustration.

Service Assembly Reference Numbers

Parts in service assemblies have reference numbers in the form a:b. The a represents the reference number of the entire service assembly and the b represents a sequential number unique to each part within the service assembly.

For example, a wheel assembly might be identified by reference number 6, the tire by 6:1, the valve by 6:2, and the wheel by 6:3. When you order the assembly identified by reference number 6, you receive all parts identified by reference numbers 6:1, 6:2, and 6:3. However, you may also order any part individually. Reference numbers of this type appear in illustrations and in part lists.

Reference Numbers Indicating Quantity

In an illustration, if a reference number indicates more than one part, the reference number has the form nX y. The n represents the quantity of the part, the X is the multiplication symbol, and the y represents the reference number.

For example, in an illustration, the reference number 2X 37 means that two of the parts identified by reference number 37 are indicated.

© The Toro Company - 2007
All Rights Reserved

Register your product at www.Toro.com

Contents

Description	Page
Rotor Housing and Scraper Assembly	3
Rotor Drive Assembly	4
Chute Assembly	5
Rotor Assembly	6
Engine, Frame and Wheel Assembly	7
Shroud, Control Panel and Gas Tank Assembly	8
Handle Assembly	9
Quick Turn Assembly	10
Carburetor Assembly No. 640299B Tecumseh LH195SP-67529D	11
Engine Assembly No. 1 Tecumseh LH195SP-67529D	12
Engine Assembly No. 2 Tecumseh LH195SP-67529D	14
Recoil Starter No. 590784 Tecumseh LH195SP-67529D	16

Part Description Abbreviations

Part descriptions in this catalog may include the following abbreviations.

AR	as required
ASM	assembly
BBC	blade brake clutch
CARR	carriage
DEG	degrees
EXT	external
FH	flat head
GA	gauge
HD	heavy-duty
HF	hex flange
HH	hex head
HHF	hex head flange
HHFTF	hex head flange thread forming
HJ	hex jam
HLH	hex lag head
HOC	height-of-cut
HSBH	hex socket button head
HSFH	hex socket flat head
HSH	hex socket head
HWH	hex washer head
HWHTF	hex washer head thread forming
HYD	hydraulic
LH	left hand
NI	nylon insert
NPTF	national pipe thread fine
PFH	phillips flat head
PPH	phillips pan head
PPHTF	phillips pan head thread forming
PRH	phillips round head
PTH	phillips truss head
PTO	power-take-off
RH	right hand
ROPS	roll-over protection system
SFH	slotted fillister head
SHH	slotted hex head
SHWH	slotted hex washer head
SPH	slotted pan head
SQH	square head
SRH	slotted round head
STD	standard
TAP	self tapping
TTH	torx truss head

Footnotes

❶	Not illustrated
❷	Not serviced separately
❸	Obtain from your local Tecumseh dealer
❹	Included in Repair Kit 632760B

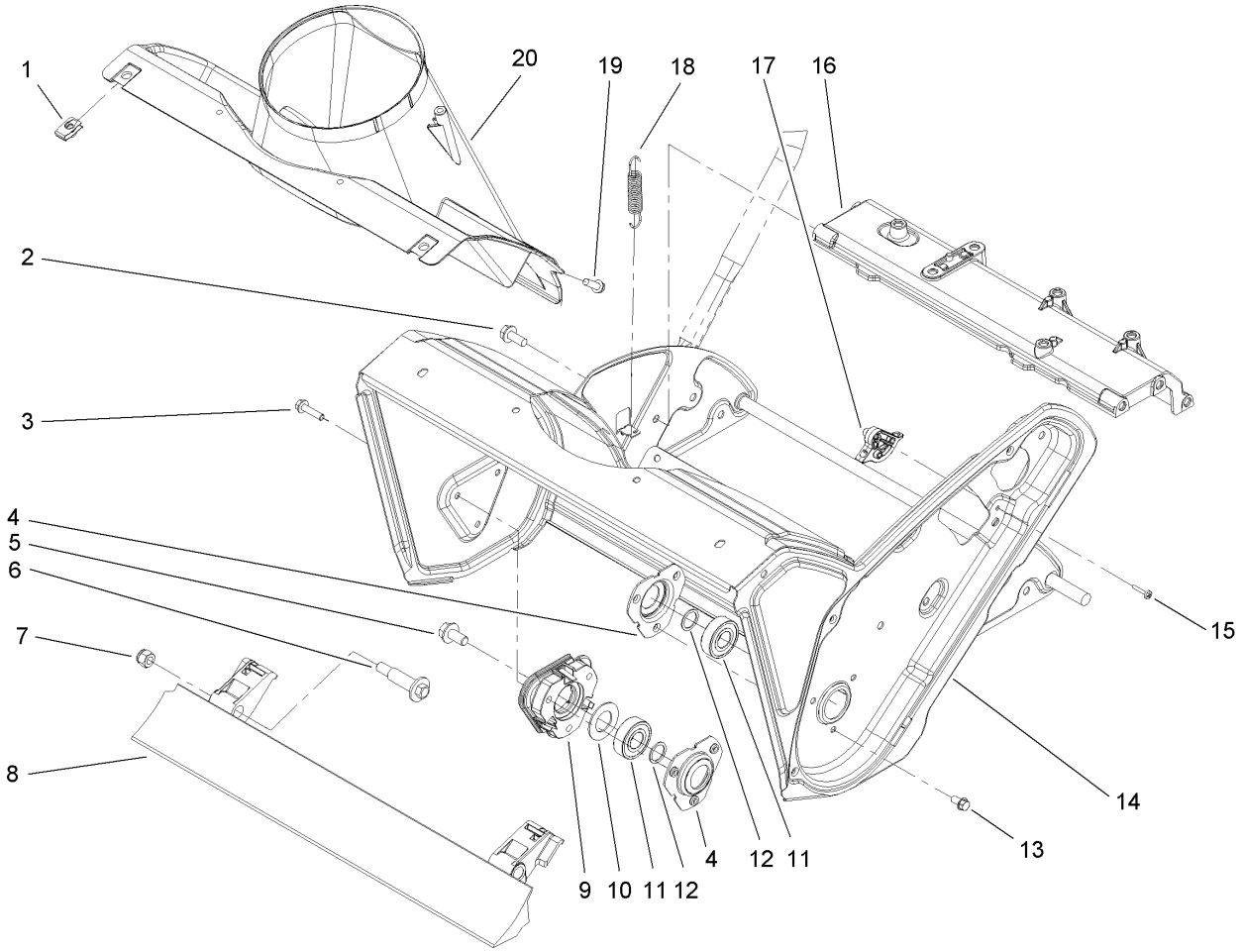

Rotor Housing and Scraper Assembly

Ref	Part No.	Qty.	Description
1	107069	2	Clip
2	32144-11	6	Screw-HWHTF
3	32144-86	3	Screw-HWHTF
4	108-4943	2	Flange-Bearing
5	110-9380	1	Screw-HWH
6	56-6590	2	Bolt-Wheel
7	3296-39	2	Nut-Lock, NI
8	108-4884	1	Blade-Scraper
9	114-3781	1	Spacer-Bearing, RH
10	110-9353	1	Washer-Rubber
11	100-1048	2	Bearing-Ball
12	52-7280	2	Washer-Thrust
13	32144-4	3	Screw-HWH
14	108-4868-03	1	Housing-Auger
15	94-4496	1	Screw-PPH
16	108-4905	1	Brace-Frame
17	108-4919	1	Guide-Cable, Clutch
18	108-4906	2	Spring-Extension
19	46-8091	3	Screw-HWH
20	108-4871	1	Chute-Lower

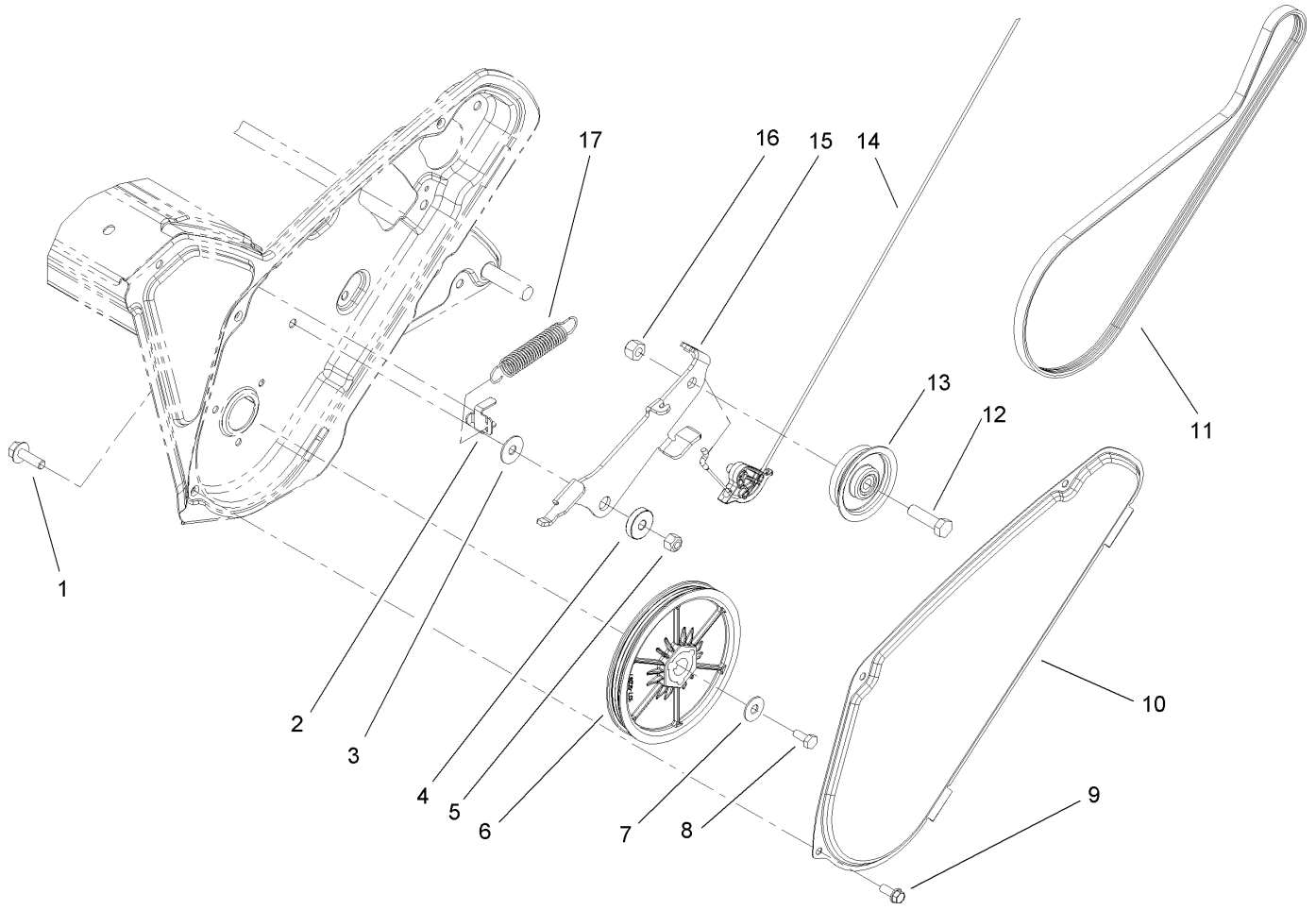

Rotor Drive Assembly

Ref	Part No.	Qty.	Description
1	3234-29	1	Screw-HHF
2	108-4938	1	Clip-Spring, Brake
3	108-4925	1	Washer
4	108-4916	1	Bushing-Pivot
5	3296-29	1	Nut-Lock, NI
6	107-9287	1	Rotor Pulley ASM
7	3290-456	1	Washer-Belleville
8	110-9381	1	Screw-HH
9	32144-85	3	Screw-HWH
10	108-4893-03	1	Cover-Belt
11	108-4921	1	Belt-Drive
12	323-29	1	Screw-HH
13	114-3785	1	Pulley-Idler
14	94-9949	1	Cable-Clutch
15	114-3782	1	Arm-Idler
16	32152-2	1	Nut-Lock, Cone
17	114-3788	1	Spring-Extension

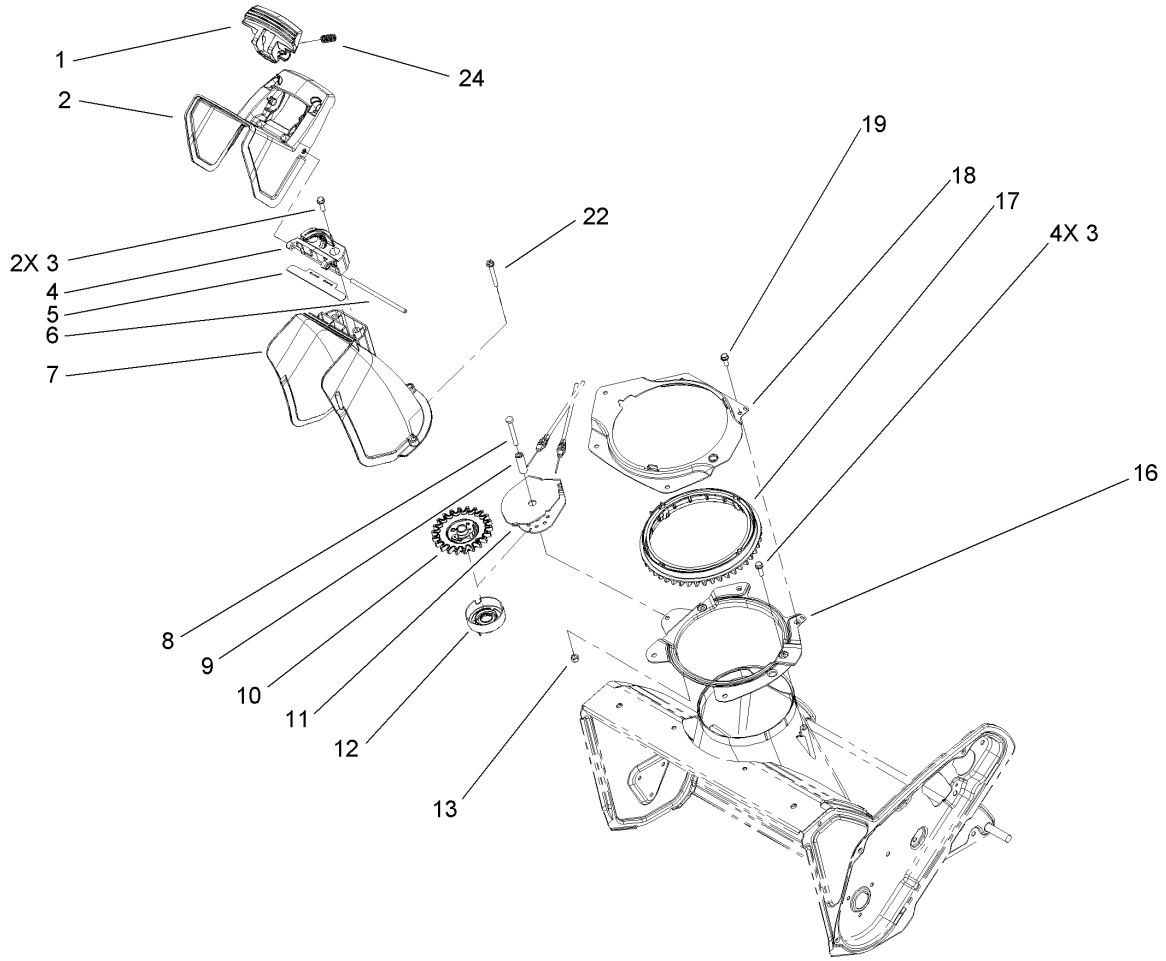

Chute Assembly

Ref	Part No.	Qty.	Description
1	108-4941	1	Trigger-Deflector
2	108-4940	1	Deflector
3	46-8091	6	Screw-HWH
4	108-4942	1	Hinge-Ratchet, Deflector
5	114-3790	1	Seal-Deflector
6	110-9368	1	Pin-Hinge, Deflector
7	108-4939	1	Chute
8	321-18	1	Screw-HH
9	108-4877	1	Spacer-Sleeve, Pinion
10	108-4875	1	Pinion-Gear
11	108-4900-03	1	Bracket-Pinion
12	114-3792	1	Retainer-Cable
13	3296-42	1	Nut-Lock, NI
16	108-4883-03	1	Ring-Support, Chute
17	108-4882	1	Ring-Chute, Gear
18	108-4874-03	1	Retainer-Ring, Chute
19	32144-85	2	Screw-HWH
22	108-4946	3	Screw-Plastite
24	110-9360	2	Spring-Compression

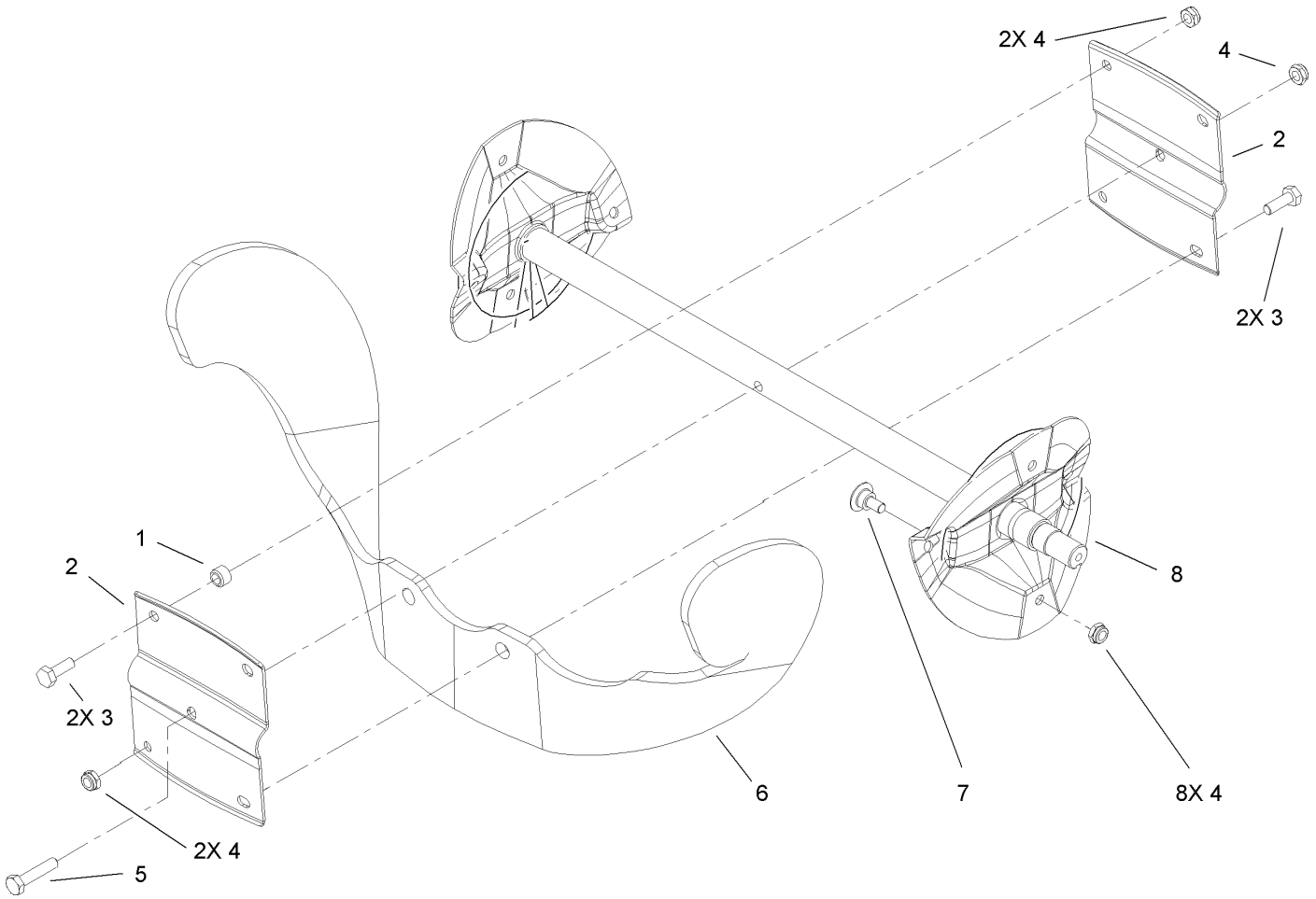

Rotor Assembly

Ref	Part No.	Qty.	Description
1	55-9370	4	Spacer-Blade, Rotor
2	66-6600-03	2	Half-Rotor
3	321-4	4	Screw-HH
4	3296-56	13	Nut-Lock, NI
5	321-8	1	Screw-HH
6	99-9313	2	Blade-Rotor
7	84-1971	8	Screw
8	108-4894-03	1	Rotor

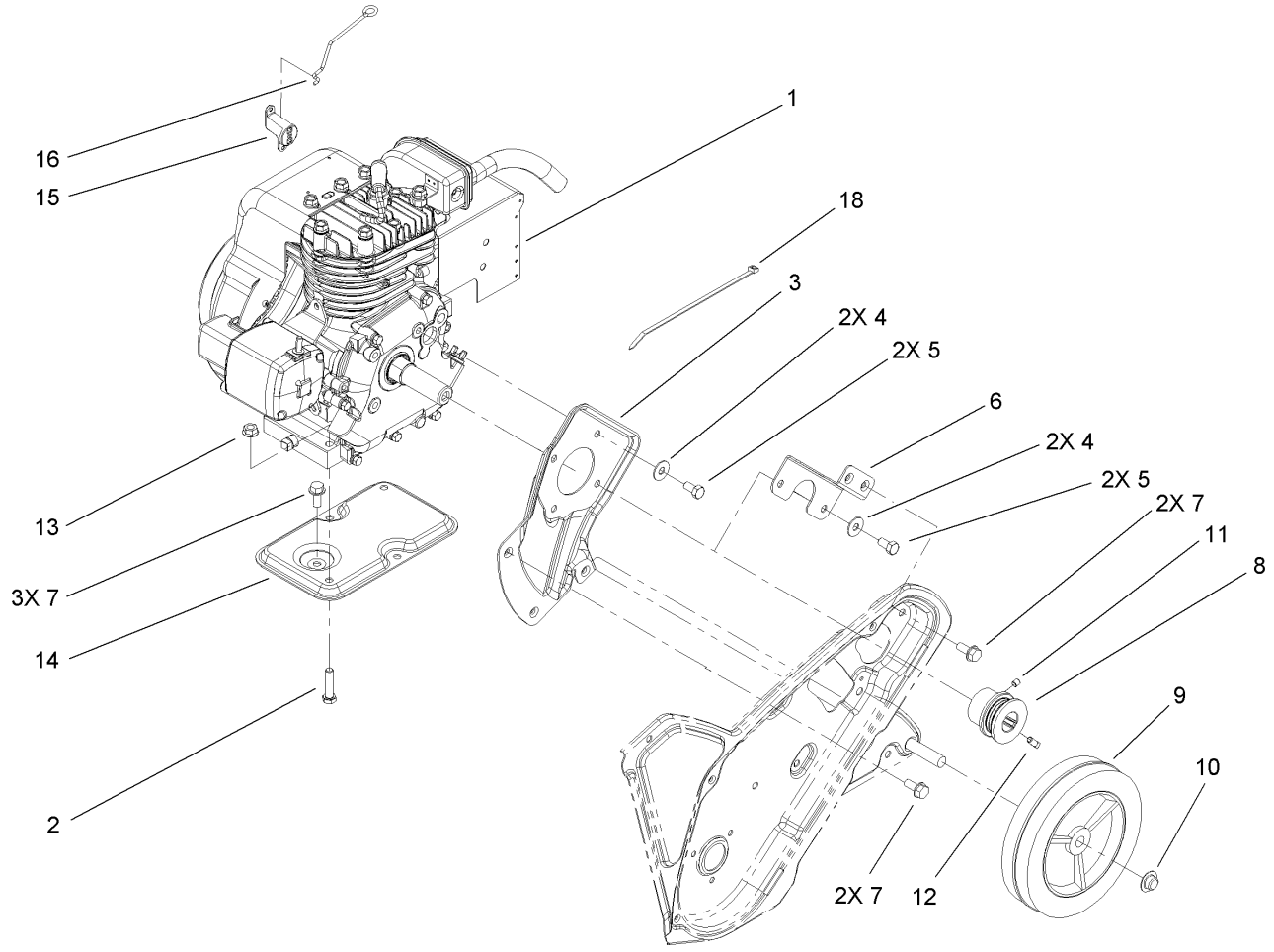

Engine, Frame and Wheel Assembly

Ref	Part No.	Qty.	Description
❷❸1		1	Engine-Tecumseh, LH195Sp67529D
2	322-17	2	Screw-HH
3	108-4892-03	1	Plate-Engine, PTO
4	3290-456	4	Washer-Belleville
5	3210-2	4	Screw-HH
6	110-9354-03	1	Support-Engine, Side
7	32144-11	7	Screw-HWHTF
8	108-4934	1	Pulley-Engine, 4 Cycle
9	66-6510	2	Wheel
10	32112-14	2	Nut-Push
11	3245-32	1	Screw-HSH
12	3241-7	1	Screw-SQH
13	32128-20	2	Nut-HF
14	108-4902-03	1	Support-Engine
15	110-9362	1	Bellcrank-Choke, 4 Stroke
16	110-9365	1	Link-Choke Knob, L-Head
18	614249	1	Strap-Tie

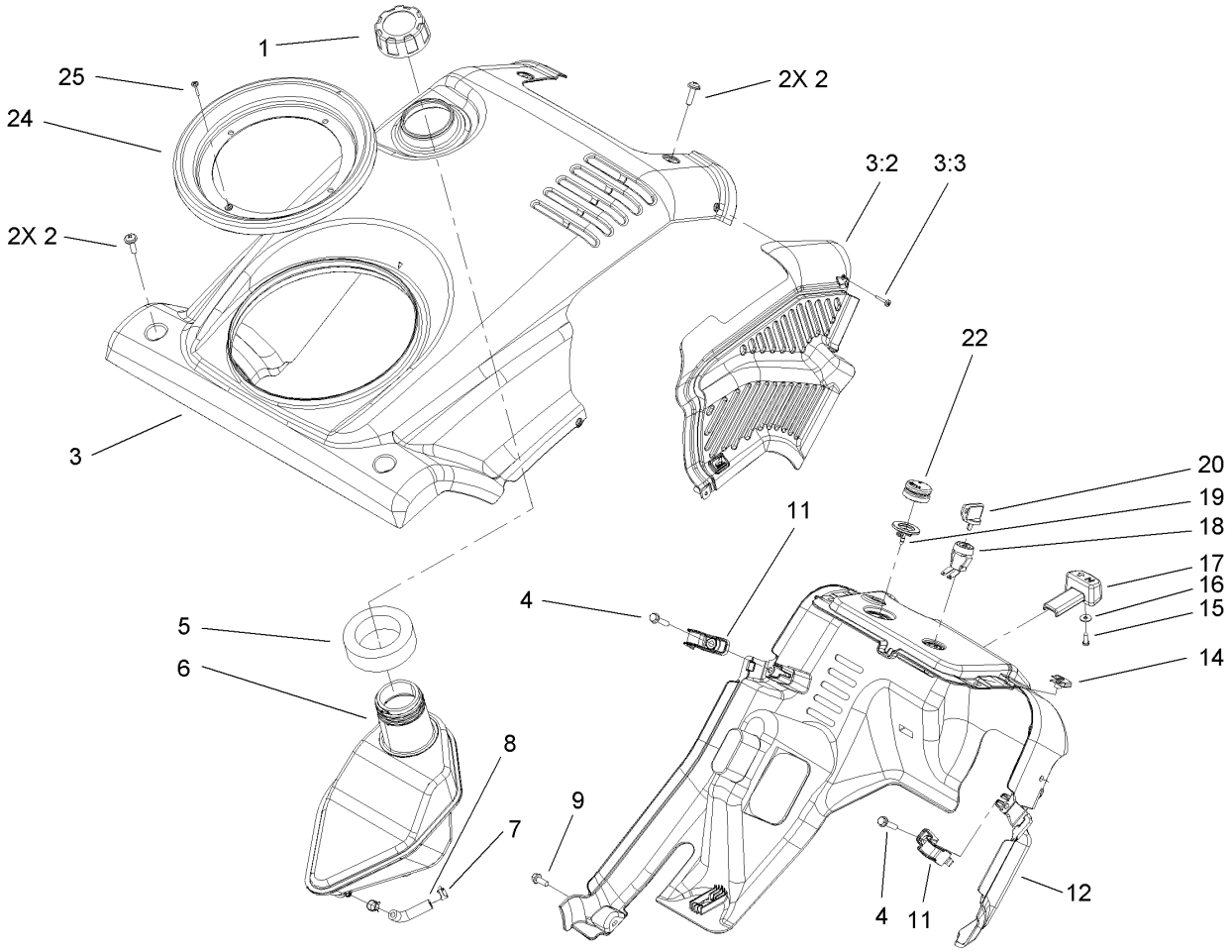

Shroud, Control Panel and Gas Tank Assembly

Ref	Part No.	Qty.	Description
1	114-3764	1	4-Cycle Gas Cap ASM
2	110-9361	4	Screw-PPH, Sems
3	114-3754	1	Shroud ASM
3:2	114-3794	1	Baffle-Heat, 4-Cycle
3:3	94-4496	2	Screw-PPH
4	46-8092	2	Screw-Plastite
5	114-3773	1	Seal-Tank
6	108-4880	1	Tank-Gas
7	2412-98	2	Clamp
8	114-3765	1	Hose-Fuel
9	32144-85	1	Screw-HWH
11	108-4947	2	Clip-Shroud
12	114-3753	1	Shroud-Lower
14	107069	2	Clip
15	32144-111	1	Screw-PPH
16	3256-49	1	Washer-Flat
17	110-9363	1	Knob-Choke
18	40-5940	1	Switch
19	44-2750	1	Body-Primer
20	63-8360	1	Key-Ignition
22	66-7460	1	Bulb-Primer
24	114-3772	1	Seal-Ring, Chute
25	94-4496	1	Screw-PPH

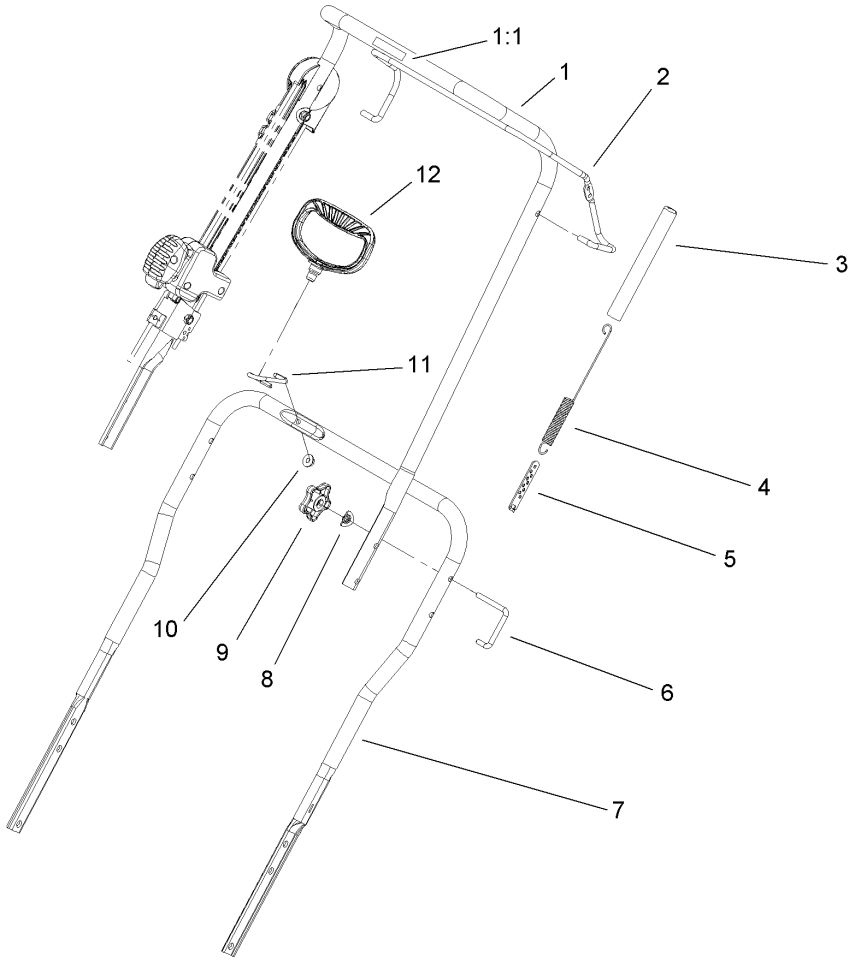

Handle Assembly

Ref	Part No.	Qty.	Description
1	114-3768	1	Upper Handle ASM
1:1	94-2577	1	Decal-Drive, Rotor
2	114-3780-03	1	Bail-Control
3	114-3796	1	Cover-Spring
4	108-4920	1	Spring-Extension
5	71-5330	1	Adjuster-Cable, Clutch
6	108-4887	2	Lock-Handle
7	108-4944-03	1	Handle-Lower
8	107-3844	2	Washer
9	114-3779	2	Knob-Handle
10	114-3778	1	Nut-Lock NI
11	108-4949	1	Guide-Rope
12	110-9375	1	Recoil-Handle

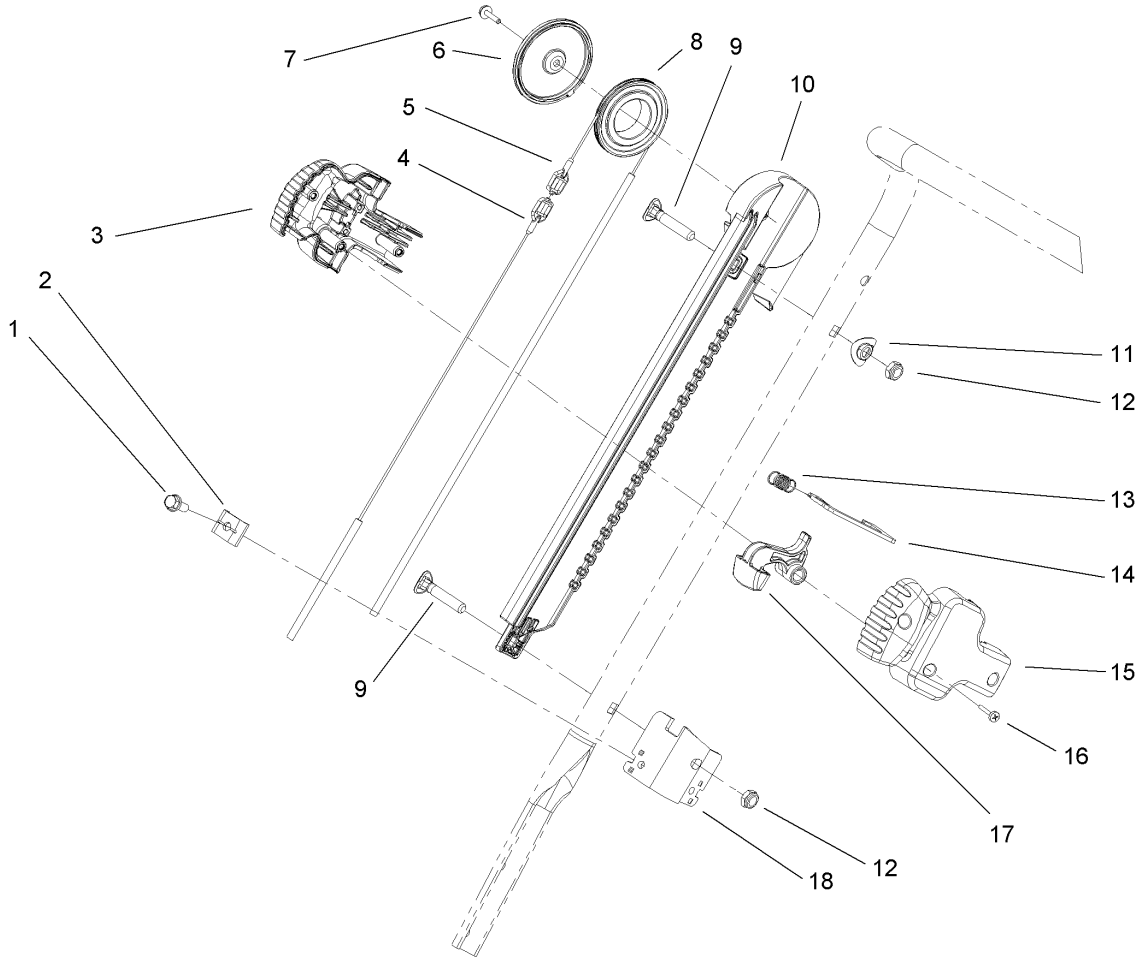

Quick Turn Assembly

Ref	Part No.	Qty.	Description
1	32144-85	2	Screw-HWH
2	106-7297	2	Clamp-Cable
3	108-4912	1	Handle-Slider, RH
4	108-4897	1	Cable-Chute, Short
5	108-4898	1	Cable-Chute, Long
6	108-4931	1	Cover-Pulley
7	98-1375	1	Screw-HWH
8	108-4907	1	Pulley-Slider
9	107-3018	2	Screw-Handle
10	108-4899	1	Track-Slider
11	107-3844	1	Washer
12	3296-47	2	Nut-Lock, NI
13	108-4914	1	Spring
14	108-4908	1	Plate-Lock, Chute
15	108-4911	1	Handle-Slider, LH
16	94-4496	3	Screw-PPH
17	108-4913	1	Trigger
18	108-4909	1	Bracket-Cable

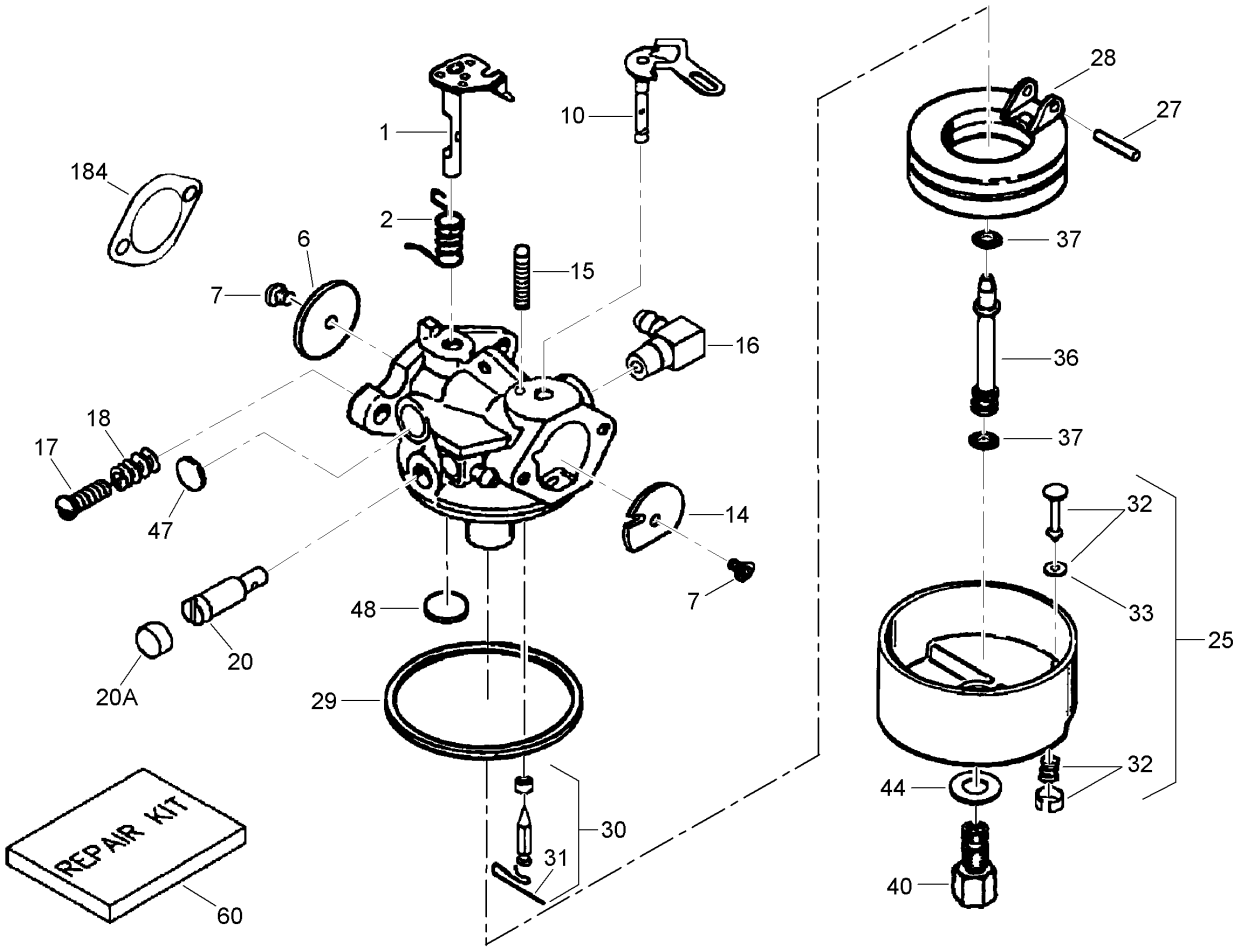

Carburetor Assembly No. 640299B
Tecumseh LH195SP-67529D

Ref	Part No.	Qty.	Description
❸	640299B	1	Carburetor
❸1	631615	1	Throttle Shaft And Lever ASM
❸2	631767	1	Spring-Return, Throttle
❸6	640070	1	Shutter-Throttle
❸❹7	650506	2	Screw-Shutter
❸10	632108	1	Choke Shaft And Lever ASM
❸14	631890	1	Shutter-Choke
❸15	630735	1	Spring-Positioning, Choke
❸16	631808	1	Fitting-Inlet, Fuel
❸17	651025	1	Screw-Throttle Crack And Idle Speed
❸18	630766	1	Spring-Tension
❸20	640027	1	Screw-Restrictor, Idle
❸20A	640053	1	Cap-Screw, Idle Restrictor
❸25	631867	1	Bowl-Float (No Drain)
❸25	631951	1	Float Bowl ASM
❸❹27	631024	1	Shaft-Float
❸28	632802	1	Float (Plastic)
❸❹29	631028	1	O Ring-Bowl, Float
❸❹30	631021A	1	Inlet Needle, Seat And Clip ASM (Includes 31)
❸31	631022	1	Clip-Spring
❸32	27136A	1	Bowl Drain ASM (Before 1/1/2006)

Ref	Part No.	Qty.	Description
❸❹33	27554	1	Gasket-Plunger, Drain (Before 1/1/2006)
❸36	632745	1	Tube-Nozzle, Main
❸❹37	632547	2	O-Ring
❸40	640131	1	Nut-Bowl, High Speed
❸❹44	27110A	1	Washer-Nut, Bowl
❸❹47	630748	1	Plug-Welch, Idle Mixture Well
❸❹48	631027	1	Plug-Welch, Atmospheric Vent
❸60	632760B	1	Carburetor Repair Kit
❸❹184	26756	1	Gasket

Engine Assembly No. 1
Tecumseh LH195SP-67529D

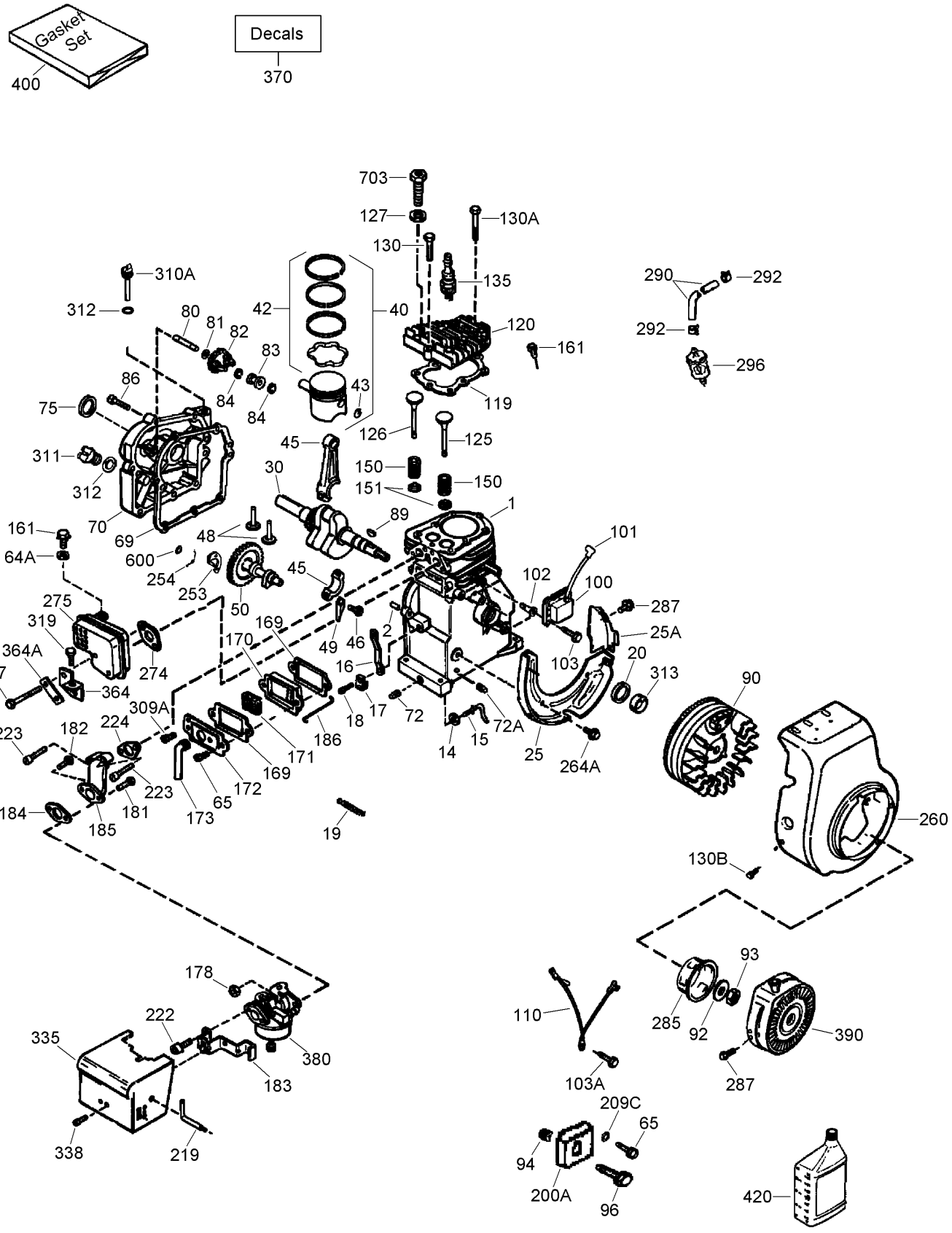

Engine Assembly No. 1
Tecumseh LH195SP-67529D

Ref	Part No.	Qty.	Description
❸1	36469A	1	Cylinder ASM (Includes 2, 20, 72, 125)
❸2	26727	2	Pin-Dowel
❸14	28277	1	Washer-Flat
❸15	31334	1	Rod-Governor
❸16	37729	1	Chute Idler Arm ASM
❸17	31335	1	Clamp-Lever, Governor
❸18	651018	1	Screw (T-15, 8-32 X 19/64)
❸19	30342	1	Spring-Extension
❸20	32600	1	Seal-Oil
❸25	36552	1	Baffle-Housing, Blower
❸25A	35883	1	Extension-Baffle
❸30	37842	1	Crankshaft
❸40	40005	1	Piston, Pin And Ring Set (.010 O S) (Includes 41-43)
❸40	40004	1	Piston, Pin And Ring Set (STD) (Includes 41-43)
❸42	40007	1	Ring Set (.010 O S)
❸42	40006	1	Ring Set (STD)
❸43	20381	2	Ring-Retaining, Piston Pin
❸45	32875A	1	Connecting Rod ASM (Includes 46, 49)
❸46	32610A	2	Bolt-Rod, Connecting
❸48	37670	2	Lifter-Valve
❸49	32654	1	Dipper-Oil
❸50	37671	1	Camshaft (M C R)
❸64A	8345	1	Washer
❸65	30200	1	Screw (10-24 X 9/16)
❸69	27677A	1	Gasket-Cover, Cylinder
❸70	32700B	1	Cover-Cylinder (Includes 75-83, 311)
❸72	27642	2	Plug-Drain, Oil (SQH 1/4-18)
❸72A	28582	1	Plug-Pipe (Internal Hex, 1/4-18)
❸75	27897	1	Seal-Oil
❸80	30574A	1	Shaft-Governor
❸81	30590A	1	Washer-Flat
❸82	30591	1	Governor Gear ASM
❸83	30588A	1	Spool-Governor
❸84	29193	1	Ring-Retaining
❸86	650488	1	Screw (1/4-20 X 1-1/4)
❸89	610961	1	Key-Flywheel
90	611195	1	Flywheel
❸92	650815	1	Washer-Belleville
❸93	650816	1	Nut-Flywheel
❸94	651016	1	Nut (10-32)
❸96	30845A	1	Bolt-Adjusting, R.P.M.
❸100	34443C	1	Ignition-State, Solid
❸101	610118	1	Cover-Spark Plug
❸102	651024	2	Stud-Mounting, Solid State
❸103	651007	2	Screw (T-15, 10-24 X 15/16)
❸103A	650821	1	Screw (10-32 X 1/2)
❸110	37682	1	Wire-Ground
❸119	36443	1	Gasket-Head, Cylinder
❸120	37675	1	Head-Cylinder (Includes 130A)
❸125	36472	1	Valve-Exhaust (1/32 O S) (Includes 151)
❸125	36471	1	Valve-Exhaust (STD) (Includes 151)
❸126	32645A	1	Valve-Intake (1/32 O S) (Includes 151)
❸126	32644A	1	Valve-Intake (STD) (Includes 151)
❸127	650691	1	Washer-Flat
❸130	6021A	2	Screw (5/16-18X1-1/2)
❸130A	650694A	5	Screw (5/16-18 X 2)
❸130B	650737	2	Screw (1/4-20 X 1/2)
❸135	35395	1	Spark Plug-Resistor (R J19 L M)

Engine Assembly No. 2
Tecumseh LH195SP-67529D

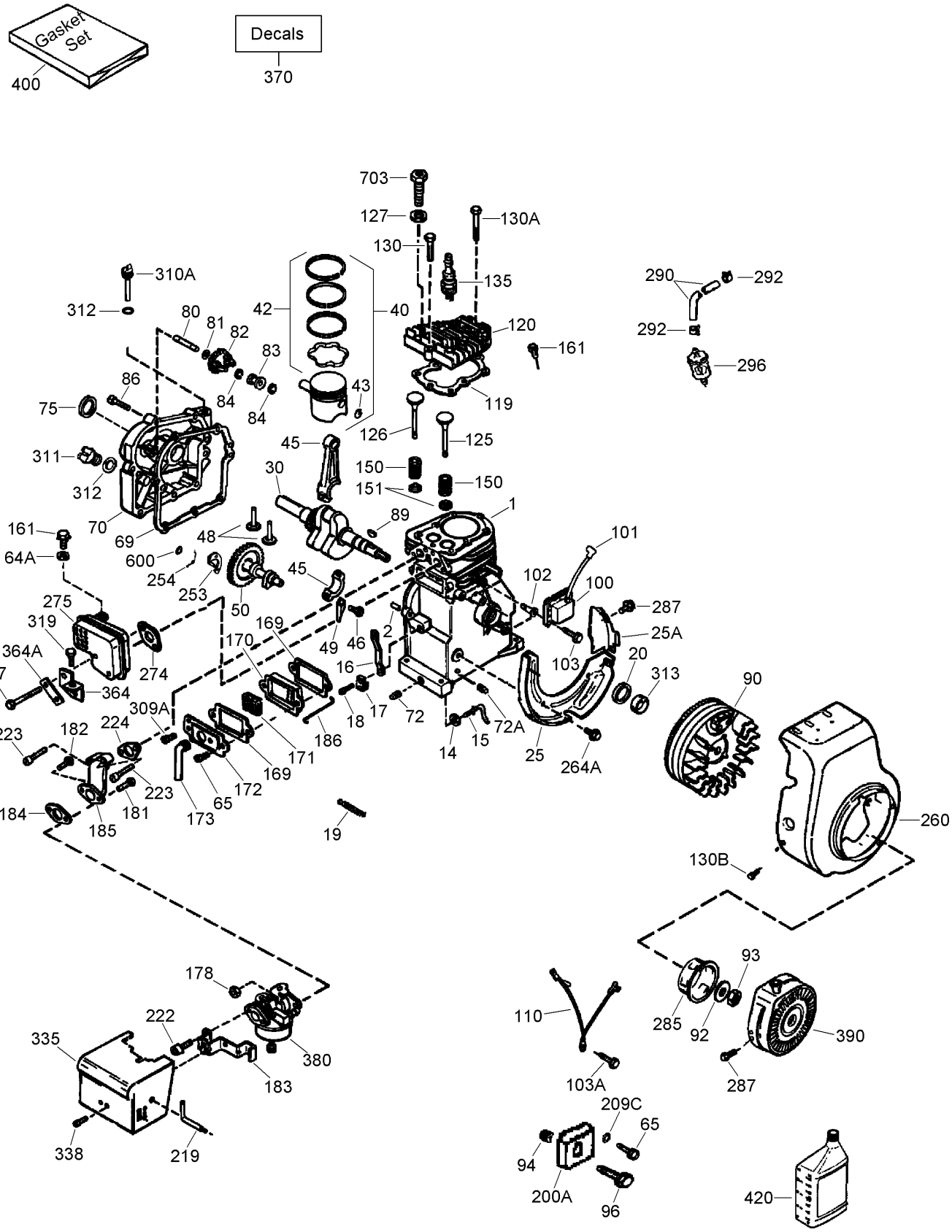

Engine Assembly No. 2
Tecumseh LH195SP-67529D

Ref	Part No.	Qty.	Description
❸150	31672	2	Spring-Valve
❸151	31673	2	Cap-Valve, Spring
❸161	30063	1	Screw (T-30, 1/4-20X1/2)
❸169	27234A	2	Gasket-Cover, Valve
❸170	27666	1	Body-Breather
❸171	31410	1	Element-Breather
❸172	34146	1	Cover-Breather
❸173	35350	1	Tube-Breather
❸178	29752	2	Nut And Lock Washer (1/4-28)
❸181	650870	1	Screw (1/4-28 X 1-11/16)
❸182	6201	1	Screw (1/4-28 X 7/8)
❸183	34583A	1	Bracket-Choke
❸184	26756	1	Gasket (Carburetor To Intake Pipe)
❸185	33691	1	Pipe-Intake
❸186	32698	1	Link-Governor To Throttle
❸200A	30846	1	Bracket-Adjusting Bolt, Governor Spring
❸209C	650518	1	Washer-Lock
❸219	34582	1	Rod-Choke
❸222	651081	2	Screw (10-32 X 15/32)
❸223	650664	2	Screw (1/4-20 X 1-19/32)
❸224	33673A	1	Gasket-Intake
❸253	36701	1	Weight-Release, Compression
❸254	36702	1	Spring-Release, Compression
❸260	35656A	1	Housing-Blower
❸264A	650802	2	Screw (1/2-20X5/8)
❸274	35865	1	Gasket-Exhaust
❸275	37684	1	Muffler (Includes 274)
❸277	792005	2	Screw (1/4-20 X 2-1/2)
❸285	36467B	1	Cup-Starter
❸287	650926	3	Screw (8-32 X 21/64)
❸290	37963	1	Line-Fuel, Low Permeation (16.0)
❸292	26460	2	Clamp-Line, Fuel
❸296	37768	1	Filter-Fuel (Includes 292)
❸309A	650783	2	Screw (10-24 X 3/4)
❸310A	34245	1	Dipstick (Includes 312)
❸311	27625	1	Plug-Fill, Oil (Includes 312)
❸312	29673	1	Gasket-Plug, Oil Fill
❸313	34080	1	Spacer
❸319	650735	1	Screw (10-24 X 3/8)
❸335	35072B	1	Cover-Carburetor
❸338	650257	2	Screw (8-32 X 5/16)
❸364	33333	1	Bracket-Cover, Carburetor
❸364A	37673	1	Plate-Locking
❸370	36695	1	Decal-Tecumseh Logo For Top Of Recoil Starter
❸380	640299B	1	Carburetor
❸390	590784	1	Starter-Recoil
❸400	36444	1	Gasket Set
❸420	730226A	1	Oil-Engine, S A E 5W30
❸600	651013	1	Washer
❸703	650818	1	Screw (5/16-18 X 1-1/2)

Ref	Part No.	Qty.	Description
❶❸999	730281	1	Winter Maintenance Kit (Includes S A E 5W30 Engine Oil)
❶❸	754337A	1	Replacement-Block, Short

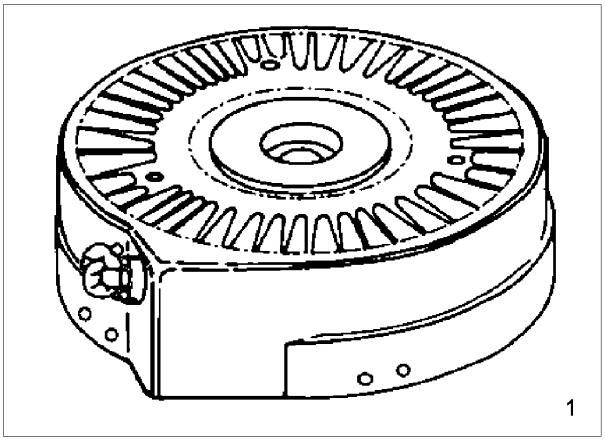

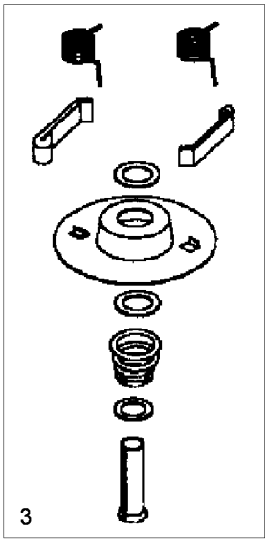

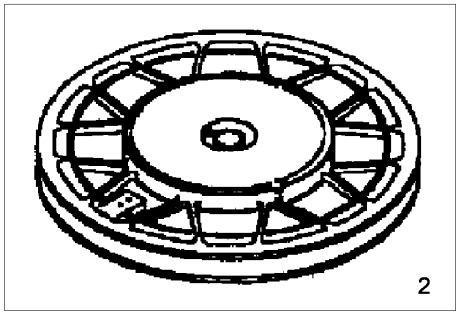

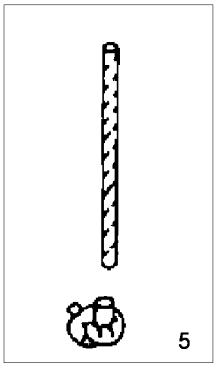

Recoil Starter No. 590784
Tecumseh LH195SP-67529D

Ref	Part No.	Qty.	Description
❸1	590784	1	Starter-Recoil (Winter Pulley, Handle Not Included)
❸2	590709	1	Pulley And Rewind Spring ASM
❸3	590774	1	Repair Kit
❸5	590535	1	Rope-Starter (98 Cut To Length)

NOTES

NOTES

NOTES


TORO®