FORM NO. 3314-976

TORO®

MODEL NO. 51575-2000001 & UP

PARTS CATALOG

850 SUPERBLOWER™

Blower & Vacuum

ONLY COPY
DO NOT REMOVE
Tech. Publications

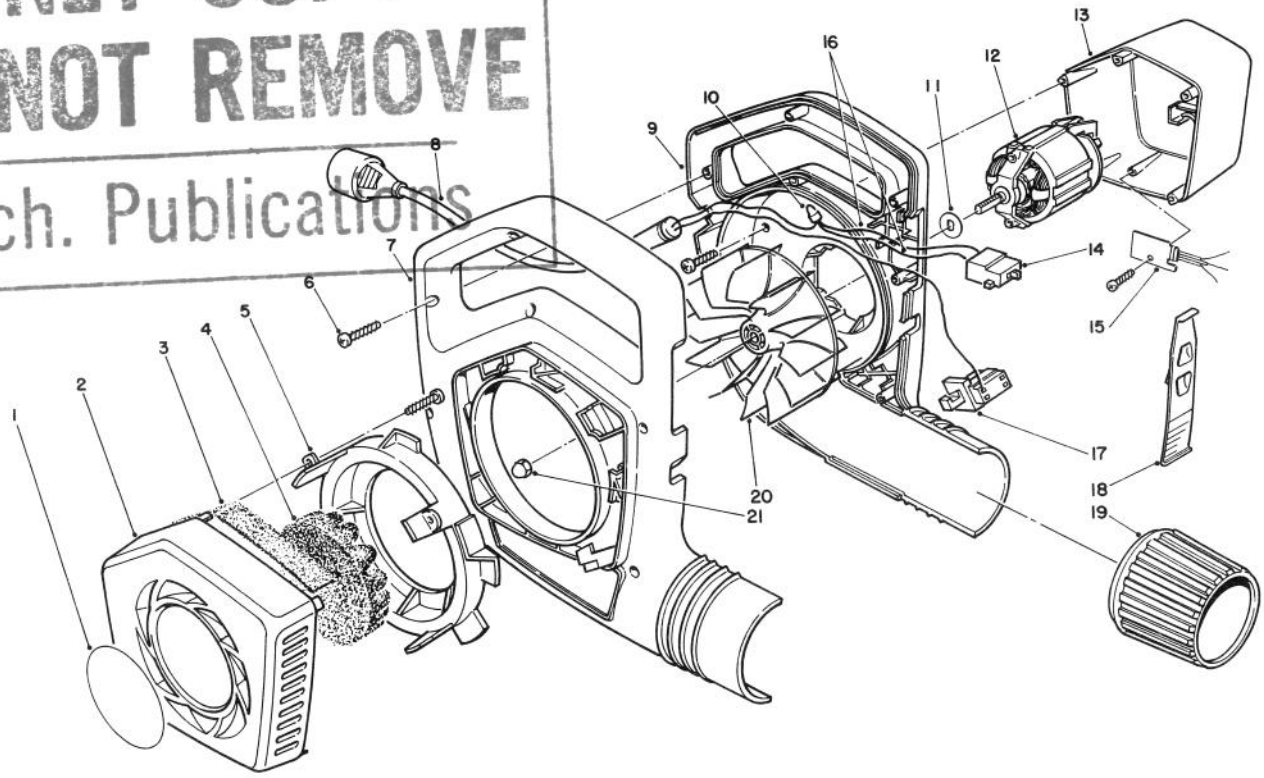

C-0612

BLOWER ASSEMBLY

Ref. No.	Part No.	Description	No. Used
1	73-1390	Decal - Cover	1
2	73-1340	Cover - Intake	1
3	73-3120	Foam - Top	1
4	73-3090	Foam - Center	1
5	73-1350	Ring - Coupling	1
6	32104-121	Screw - Self Tapping	18
7	60-9612	Housing - Blower, R.H.	1
8	73-3473	Cord - Power Supply	1
9	61-8431	Housing - Blower, L.H.	1
10	218-511	Connector - Wire	1
11	57-4270	Washer - Impeller	1

Ref. No.	Part No.	Description	No. Used
12	73-1370	Motor - Blower	1
13	57-1072	Cover - Motor	1
14	73-5780	Switch - 2 Speed	1
15	73-5790	Diode Assembly	1
16	73-3170	Wire	2
17	57-5910	Switch - Interlock	1
18	57-5940	Switch - Cam, 2 Speed	1
19	57-3260	Collar - Output	1
20	73-1330	Impeller	1
21	73-5380	Nut - Cap, Locking	1

TPS

© The TORO Company - 1991

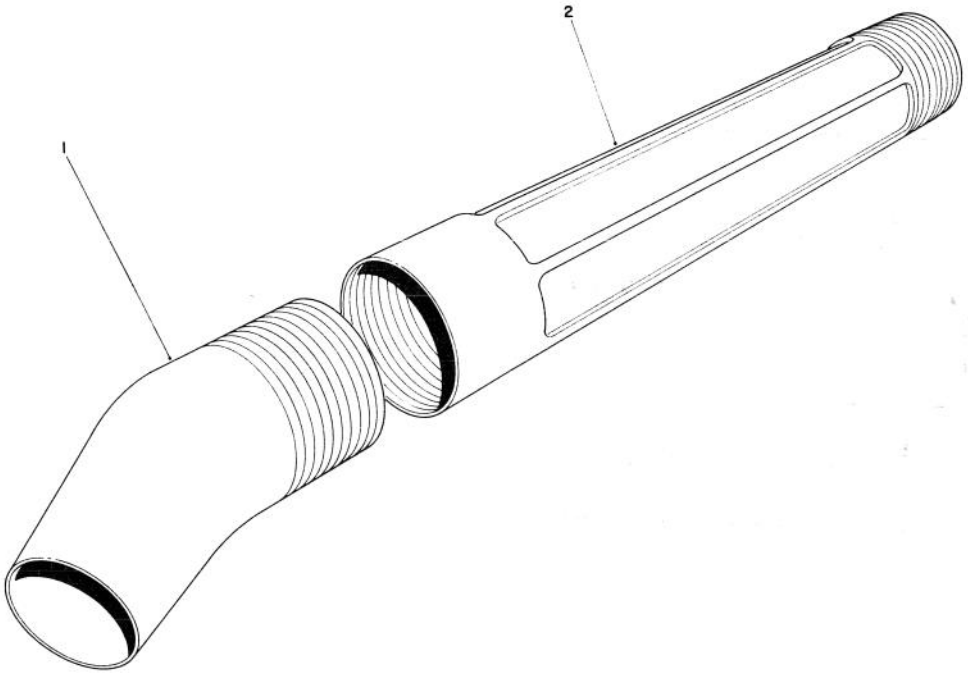

C-0154

BLOWER TUBE ASSEMBLY

Ref. No.	Part No.	Description	No. Used
1	57-3280	Nozzle - Concentrating	1
2	57-3270	Tube - Blower	2

Ref. No.	Part No.	Description	No. Used

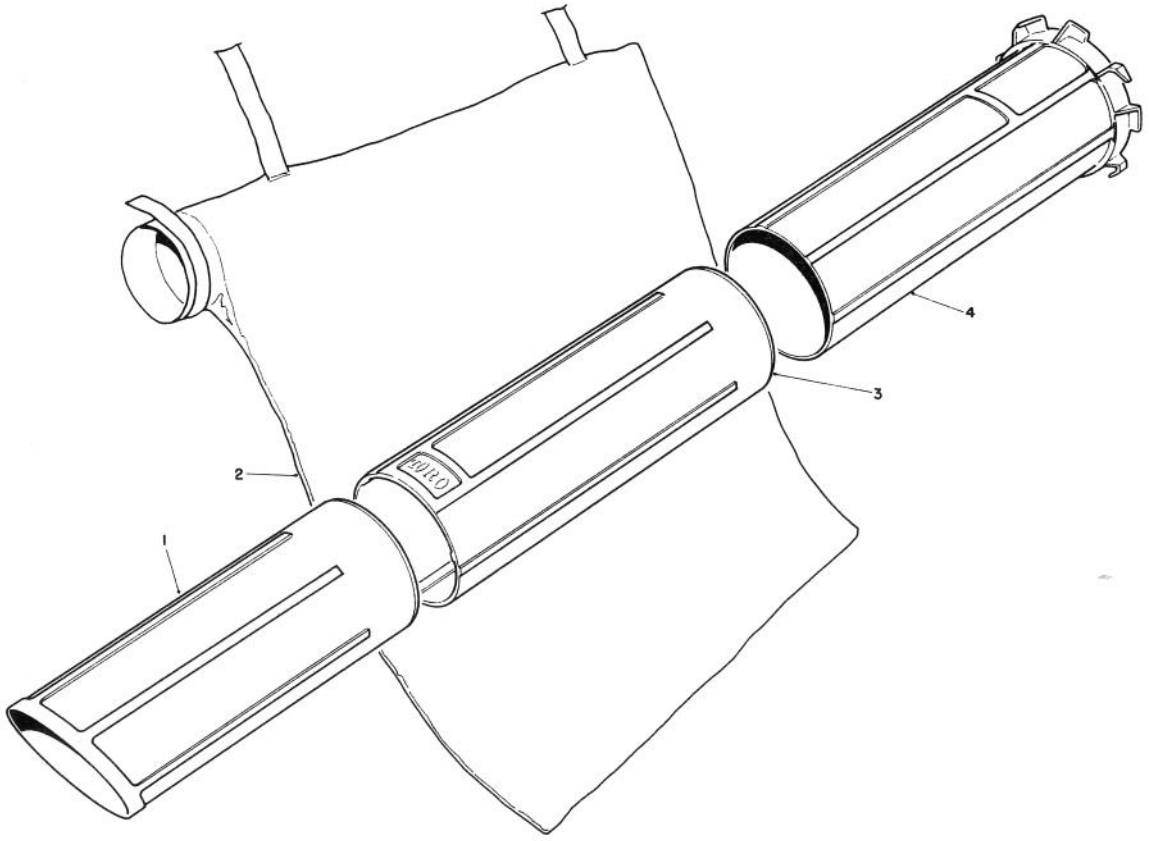

C-0613

VACUUM TUBES AND BAGGING KIT Model No. 51533

Ref. No.	Part No.	Description	No. Used
1	73-1460	Tube - Vacuum, Lower	1
2	73-1640	Bag - Vacuum	1

Ref. No.	Part No.	Description	No. Used
3	73-1450	Tube - Vacuum, Middle	1
4	73-1440	Tube - Vacuum, Upper	1

PRODUCT CHANGES

In an effort to make improvements available to TORO owners as quickly as possible, minor changes are incorporated into Toro's products from time to time that do not become immediately shown in the Parts Catalog. If such a change has been made in your unit, which is not reflected in your manual, see your TORO Distributor or his Authorized TORO Service Dealer for information and part numbers.

COUNTRIES OTHER THAN THE UNITED STATES OR CANADA

Customers who have purchased TORO products exported from the United States or Canada should contact their Toro Distributor (Dealer) to obtain guarantee policies for your country, province or state. If for any reason you are dissatisfied with your Distributor's service or have difficulty obtaining guarantee information, contact the TORO importer. If all other remedies fail, you may contact us at The Toro Company.

MAINTENANCE RECORD

Date								

Compliance with Radio Interference Regulations Certified.
Certifie Conforme au Reglement sur le Brouillage Radioelectrique.

Litho in U.S.A.
LTS-109027