FORM NO. 3314-979

TORO

MODEL NO. 51571-2000001 & UP

PARTS CATALOG

YARD BLOWER VACUUM

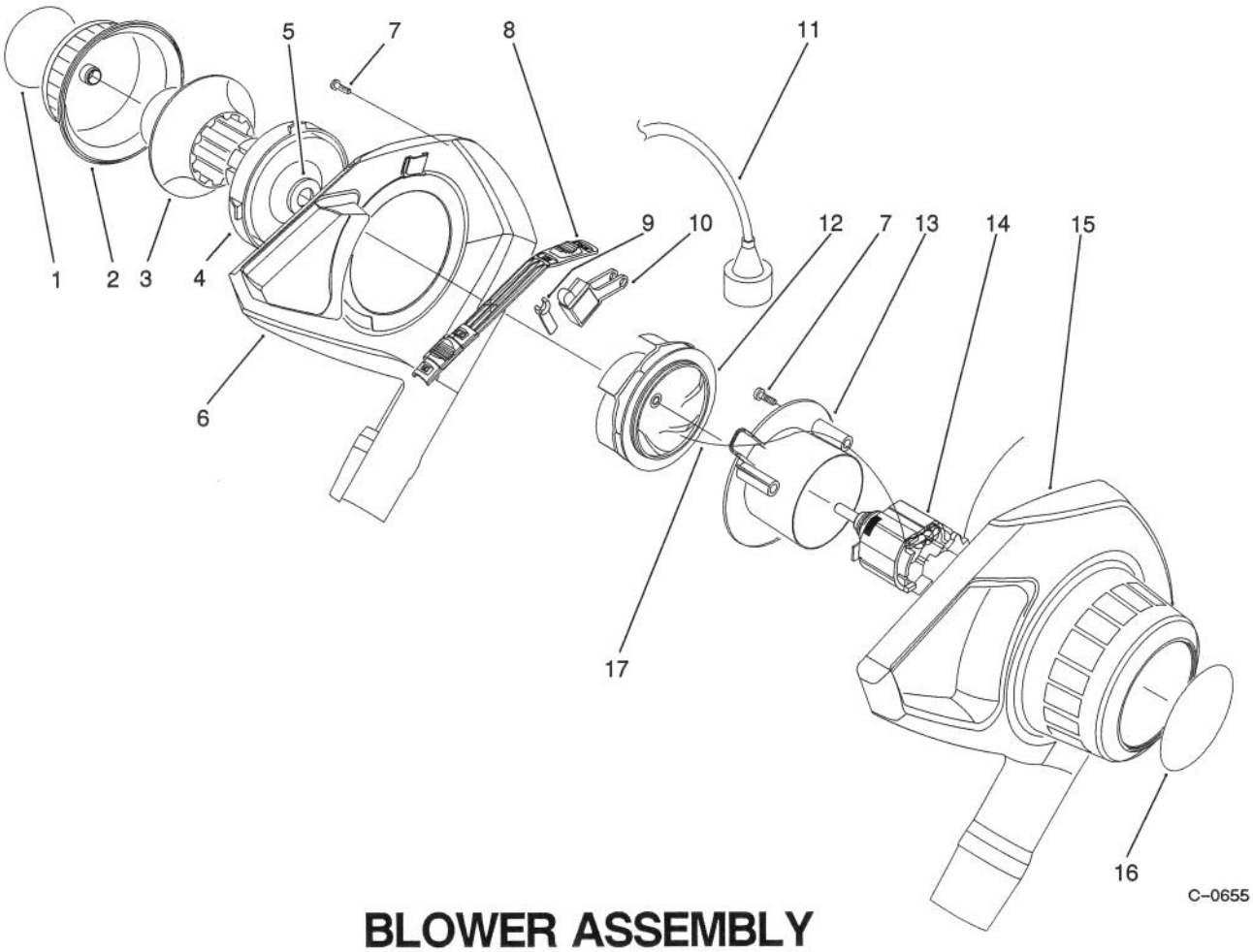

BLOWER ASSEMBLY

Ref. No.	Part No.	Description	No. Used
1	73-4250	Decal - Choke	1
2	73-4050	Cover - Choke	1
3	73-4060	Ring - Choke	1
4	73-4070	Base - Choke	1
5	32115-16	Clip - Retainer	1
6	73-4110	Housing Assembly - R.H.	1
7	32104-121	Screw	9
8	73-4080	Bar - Switch	1
9	73-4090	Lever - Actuating	1

Ref. No.	Part No.	Description	No. Used
10	73-4150	Switch	1
11	73-3471	Cord - Power	1
12	73-4020	Impeller Assembly	1
13	73-4141	Plate - Retaining	1
14	73-4181	Motor	1
15	73-4010	Housing - L.H.	1
16	73-4260	Decal - Motor Cover	1
17	73-5840	Wire	2

TPS

©The TORO Company -1991

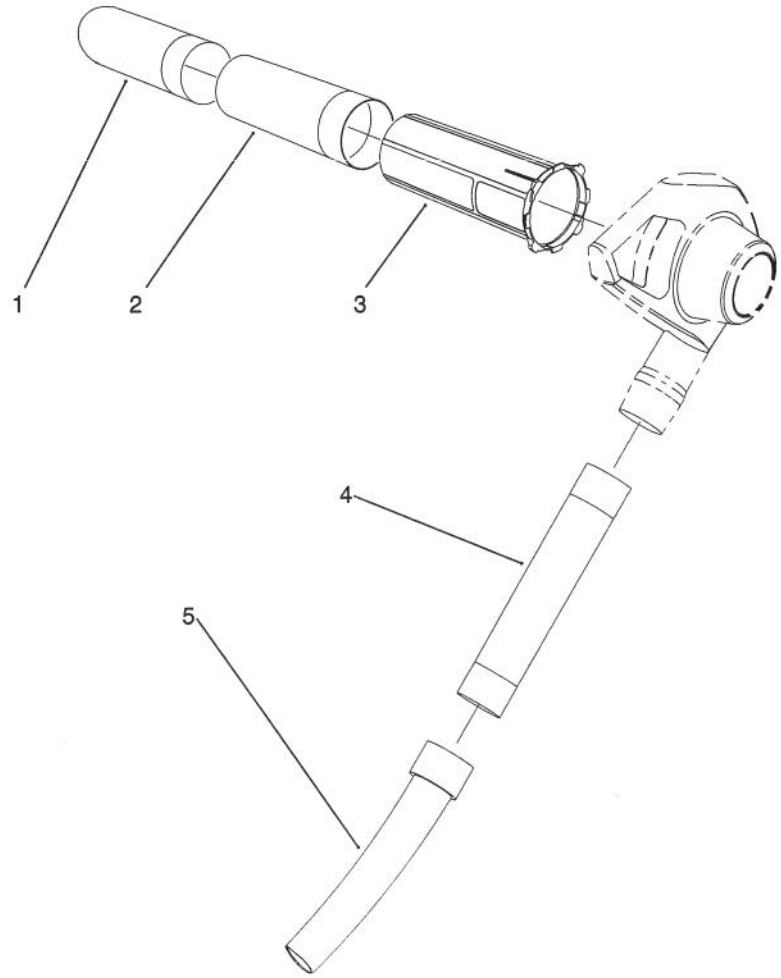

C-0656

TUBE ASSEMBLY

Ref. No.	Part No.	Description	No. Used
1	73-1460	Vac Tube - Lower	1
2	73-1450	Vac Tube - Middle	1
3	73-3990	Vac Tube - Upper	1

Ref. No.	Part No.	Description	No. Used
4	57-3270	Tube - Blower	1
5	73-4160	Nozzle	1

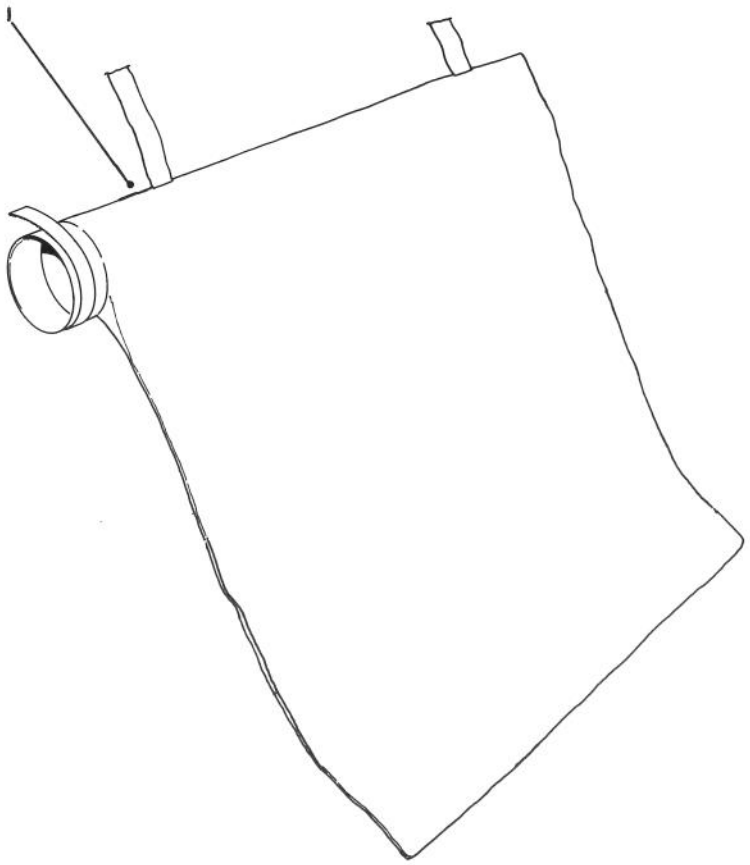

C-0657

BAG ASSEMBLY

Ref. No.	Part No.	Description	No. Used
1	73-1640	Bag - Vacuum	1

Ref. No.	Part No.	Description	No. Used

PRODUCT CHANGES

In an effort to make improvements available to TORO owners as quickly as possible, minor changes are incorporated into Toro's products from time to time that do not become immediately shown in the Parts Catalog. If such a change has been made in your unit, which is not reflected in your manual, see your TORO Distributor or his Authorized TORO Service Dealer for information and part numbers.

COUNTRIES OTHER THAN THE UNITED STATES OR CANADA

Customers who have purchased TORO products exported from the United States or Canada should contact their Toro Distributor (Dealer) to obtain guarantee policies for your country, province or state. If for any reason you are dissatisfied with your Distributor's service or have difficulty obtaining guarantee information, contact the TORO importer. If all other remedies fail, you may contact us at The Toro Company.

MAINTENANCE RECORD

Date								

Compliance with Radio Interference Regulations Certified.
Certifie Conforme au Reglement sur le Brouillage Radioelectrique.

AL-914341

Litho in U.S.A.