FORM NO. 3314-987

TORO®

MODEL NO. 20214-2000001 & UP

PARTS CATALOG

21" RECYCLER®
Mower

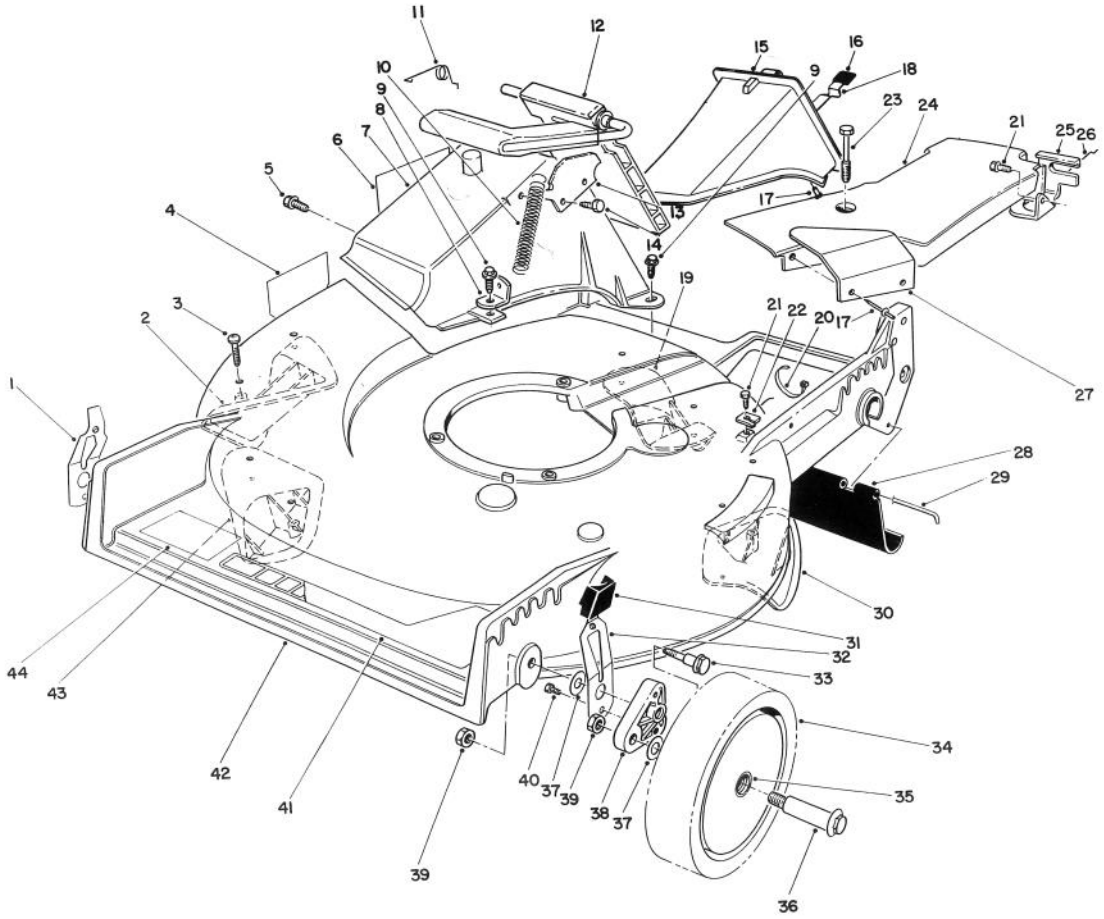

C-1026

HOUSING ASSEMBLY

Ref. No.	Part No.	Description	No. Used
1	71-0560	Spring Arm Ass'y - R.H.	1
2	76-2130	Plate - Kicker Left Front	1
3	32144-111	Screw - Pan Hd.	8
4	56-6270	Decal - Danger	1
5	46-6810	Screw - Hex Washer Hd. Thread Forming	1
6	62-4060	Decal - Danger	1
7	82-9151	Tunnel - Discharge	1
8	80-3780	Bracket - Spring	1
9	46-6811	Screw w/Washer	3
10	76-4660	Spring - Door	1
11	80-3770	Retainer - Door	1
12	77-0200	Discharge Door Assembly	
13	76-4570	Plate - Latch	1
14	46-8090	Screw - Hex Washer Hd. Self Tapping	2

Ref. No.	Part No.	Description	No. Used
15	77-0501	Plug Assembly (Incl. Ref. #16-18)	1
16	76-4650	Grip - Latch	1
17	3295-35	Rivet	3
18	76-4640	Latch - Plate	1
19	76-2150	Plate - Kicker Left Rear	1
20	3290-378	Tie - Cable	1
21	32144-70	Screw - Hex Washer Hd. Thread Forming	2
22	62-3720	Clamp - Cable	1
23	37-7260	Screw - Special Cap	2
24	52-7406	Belt Cover Assembly (Incl. Ref. #17 & 27)	1
25	82-5680	Bracket - Traction Adjust.	1
26	46-7030	Retainer - Cable	1
27	77-0280	Shield - Heat	1

TPS

©The TORO Company - 1991

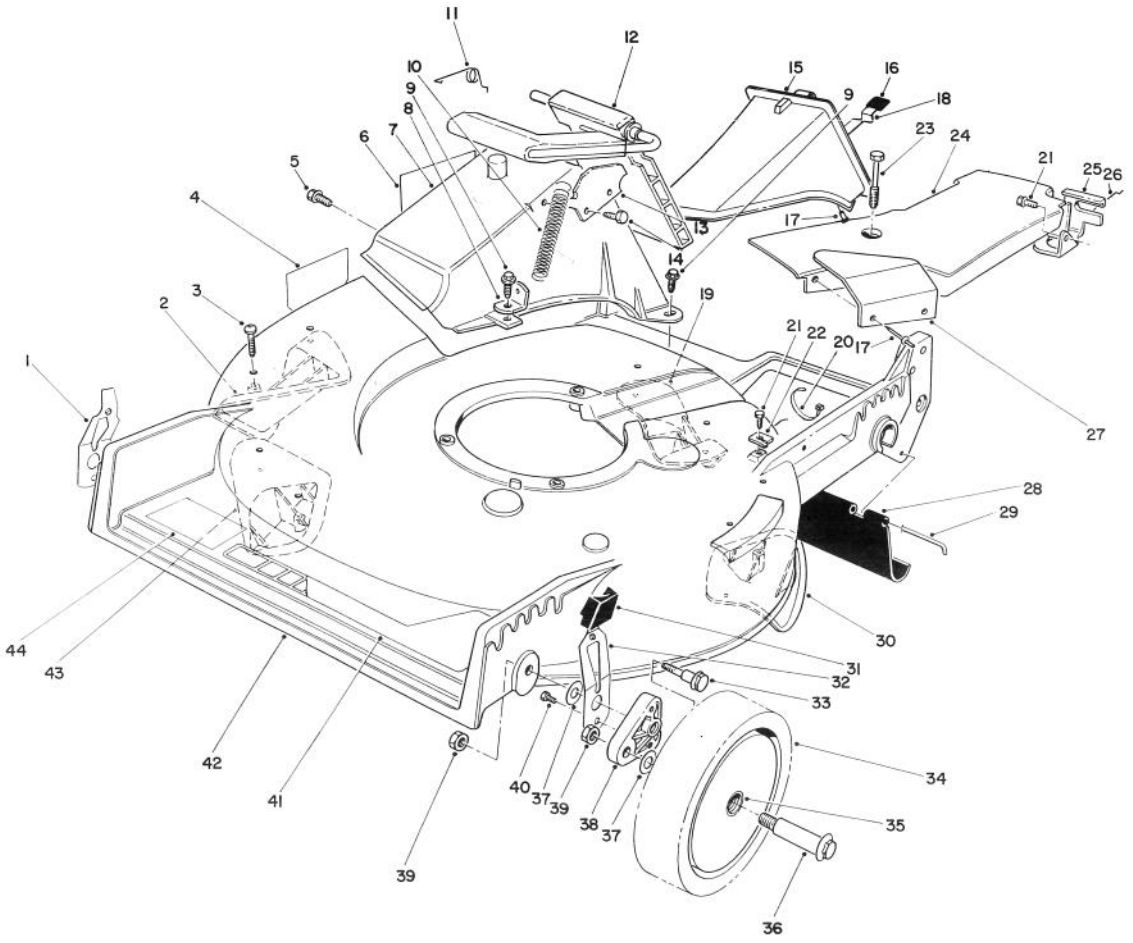

C-1026

HOUSING ASSEMBLY (CONTINUED)

Ref. No.	Part No.	Description	No. Used
28	44-0580	Shield -Rear	1
29	33-3208	Rod - Shield	1
30	76-2140	Plate - Kicker Right Rear	1
31	25-7740	Knob - Spring Arm	2
32	71-0570	Spring Arm Ass'y - L.H.	1
33	66-0561	Screw - Pivot	2
34	11-9509	Wheel & Tire Assembly (Incl. Ref. #35)	2
35	27-6250	Bushing	4
36	27-6231	Bolt - Wheel	2

Ref. No.	Part No.	Description	No. Used
37	40-1940	Washer - Wheel	4
38	66-0580	Arm - Pivot	2
39	52-3620	Nut - Lock	4
40	32144-85	Screw - Hex Hd. Cap	2
41	76-1950	Decal - Deck	1
42	14-3519	Housing Assembly (Incl. Ref. #2-4, 19, 29 & 43)	1
43	76-2120	Plate - Kicker Rt. Front	1
44	71-0600	Decal- Toro	1

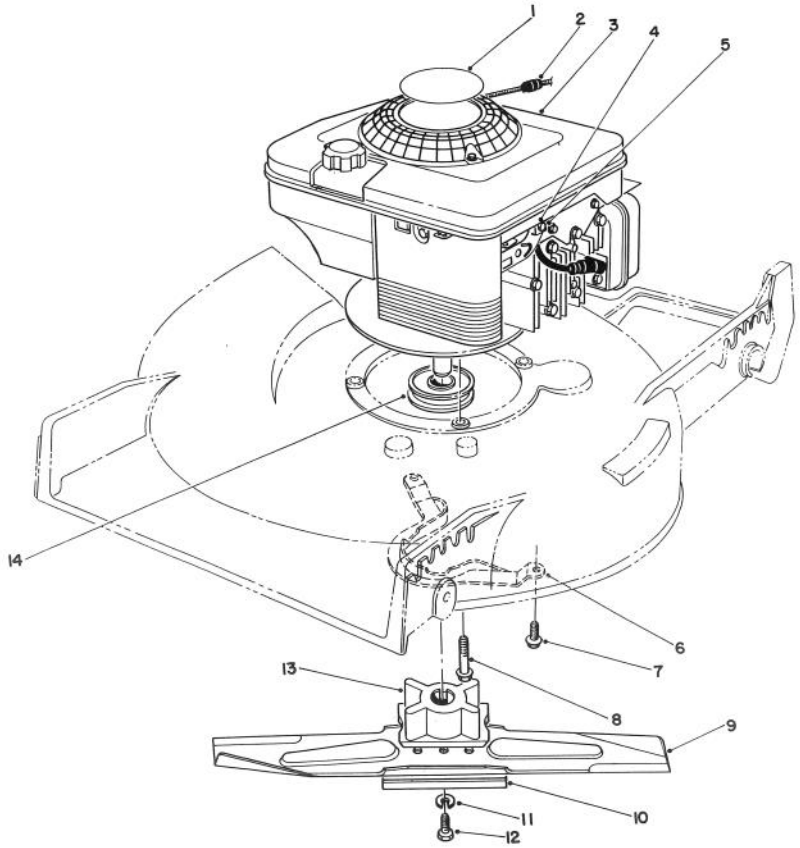

C-0567

ENGINE ASSEMBLY

Ref. No.	Part No.	Description	No. Used
1	75-9400	Decal - Engine	1
2	2210-316	Stop - Rope	1
3		Engine	1
†4	2210-249	Clamp - Casing	1
†5	2210-313	Screw - Clamp	1
6	66-0570	Guide - Belt	1
7	32144-70	Screw - Thread Forming	2
8	32144-102	Screw - Thread Forming	3

Ref. No.	Part No.	Description	No. Used
9	14-1659	Blade - 21" (Incl. Ref. #10)	1
10	80-0510	Stiffener - Blade	1
11	3253-22	Washer - Lock	1
12	26-0670	Screw - Blade	1
13	62-7540	Retainer - Blade	1
14	62-7550	Pulley - Driver	1

†Provided with Engine

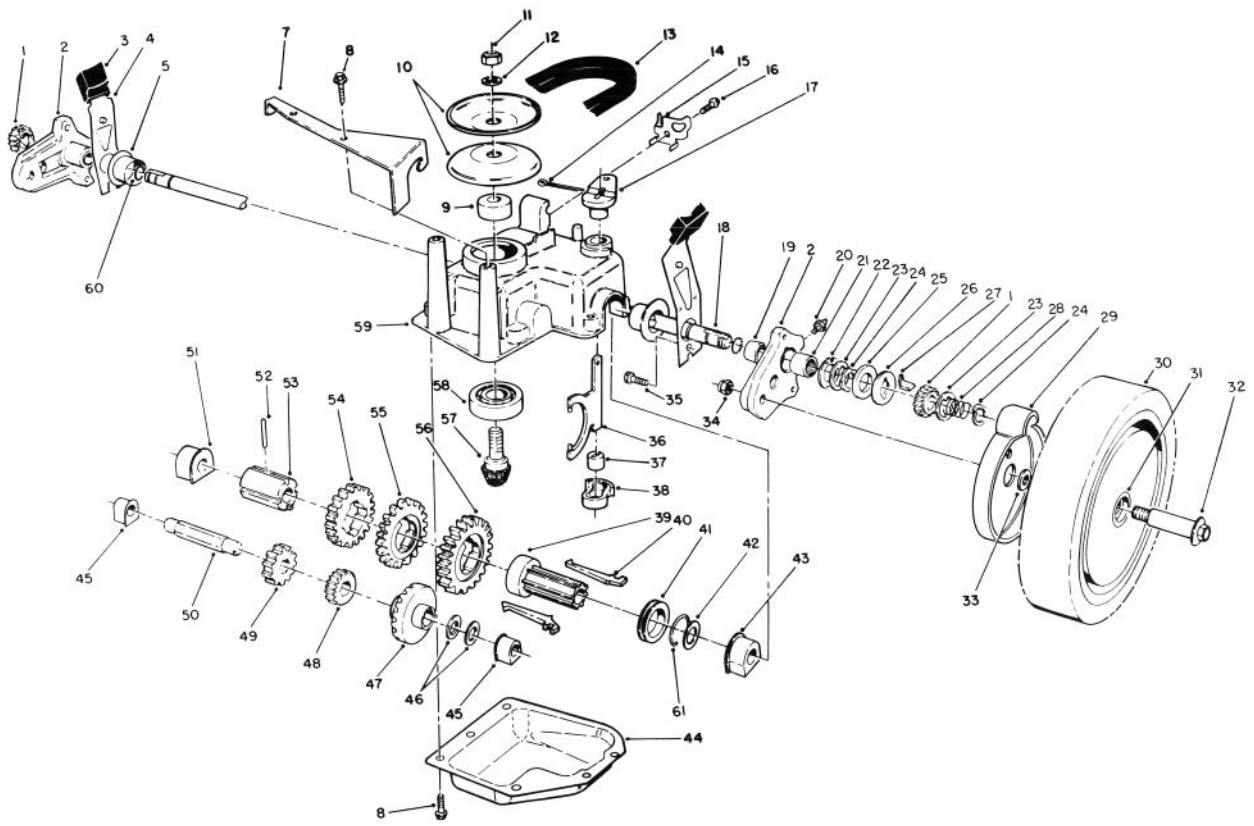

C-0521

GEAR CASE ASSEMBLY

Ref. No.	Part No.	Description	No. Used
1	65-4750	Pinion	2
2	63-8701	Pivot Arm Assembly (Incl. Ref # 19, 20, & 21)	2
3	25-7740	Knob - Arm	2
4	63-8720	Spring Arm Assembly	2
5	42-3520	End Cap	2
7	62-4320	Bracket - Belt Guide	1
8	49-2040	Screw - Self Tapping	8
9	62-6660	Spacer	1
10	60-8840	Pulley - Half	2
11	3296-5	Locknut	1
12	3256-24	Washer - Flat	1
13	62-3900	V-Belt	1
14	3272-10	Pin - Cotter	1
15	82-8780	Cable - Retainer	1
16	32144-70	Screw - Thread Forming	1
17	60-8821	Lever - Shift	1
18	65-4770	Shaft - Output	1
19	70-9760	Bushing	2
20	302-56	Fitting - Grease	2
21	48-2060	Needle Bearing	2
22	65-4730	Thrust Washer	2
23	65-4740	Thrust Washer	4
24	65-2720	Ring - Retaining	4
25	65-4710	Ring - Friction	2

Ref. No.	Part No.	Description	No. Used
26	65-4760	Washer - Clutch	2
27	66-6050	Key - Rocker L.H.	1
*	66-6040	Key - Rocker R.H.	1
28	65-4720	Spring	2
29	74-1660	Cover - Wheel	2
30	11-9519	Wheel - Tire & Gear Ass'y (Incl. Ref. # 31)	2
31	27-6250	Bushing - Wheel	4
32	27-6231	Wheel Bolt	2
33	74-1671	Spacer - Wheel Cover	2
34	52-3620	Locknut	2
35	32144-85	Screw	2
36	60-8870	Yoke - Shift	1
37	29-9570	Bushing - Yoke	1
38	60-8810	Retainer - Shift Fork	1
39	76-0780	Sleeve - Shift Key	1
40	76-0760	Key - Shift	2
41	76-0770	Collar - Shift	1
42	36-4780	Washer - Thrust	1
43	60-8770	Bushing - Output Shaft	1
44	60-8730	Cover - Gear Case	1
45	60-8750	Bushing - Int. Shaft	2
46	36-4791	Washer - Thrust	2
47	55-3760	Gear - Pinion 15 Tooth	1
48	55-3780	Gear - Pinion 20 Tooth	1

*Not Illustrated

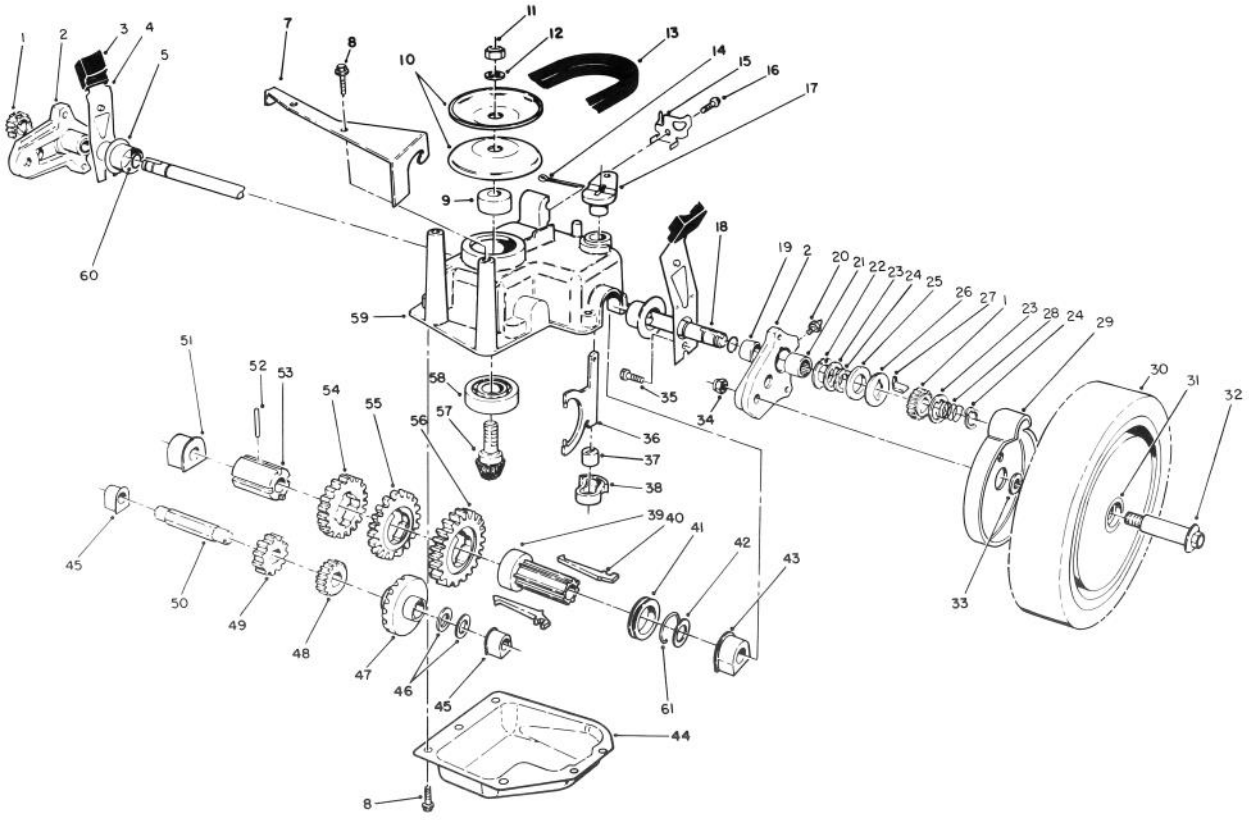

C-0521

GEAR CASE ASSEMBLY (CONTINUED)

Ref. No.	Part No.	Description	No. Used
49	55-3800	Gear - Pinion	1
50	60-8800	Shaft - Intermediate	1
51	60-8850	Bushing - Output Shaft	1
52	32121-120	Pin - Coil	1
53	60-8790	Sleeve - Gear	1
54	55-3810	Gear - 39 Tooth 3rd Gear	1
55	55-3790	Gear - 44 Tooth 2nd Gear	1

Ref. No.	Part No.	Description	No. Used
56	55-3770	Gear - 49 Tooth 1st Gear	1
57	60-8890	Pinion - Bevel	1
58	38-7820	Bearing - Ball	1
59	60-8710	Gear Case - Upper	1
60	237-153	O-Ring	2
61	65-5250	Clip - Spring	1
*	62-6673	Gear Case Assembly	1

*Not Illustrated

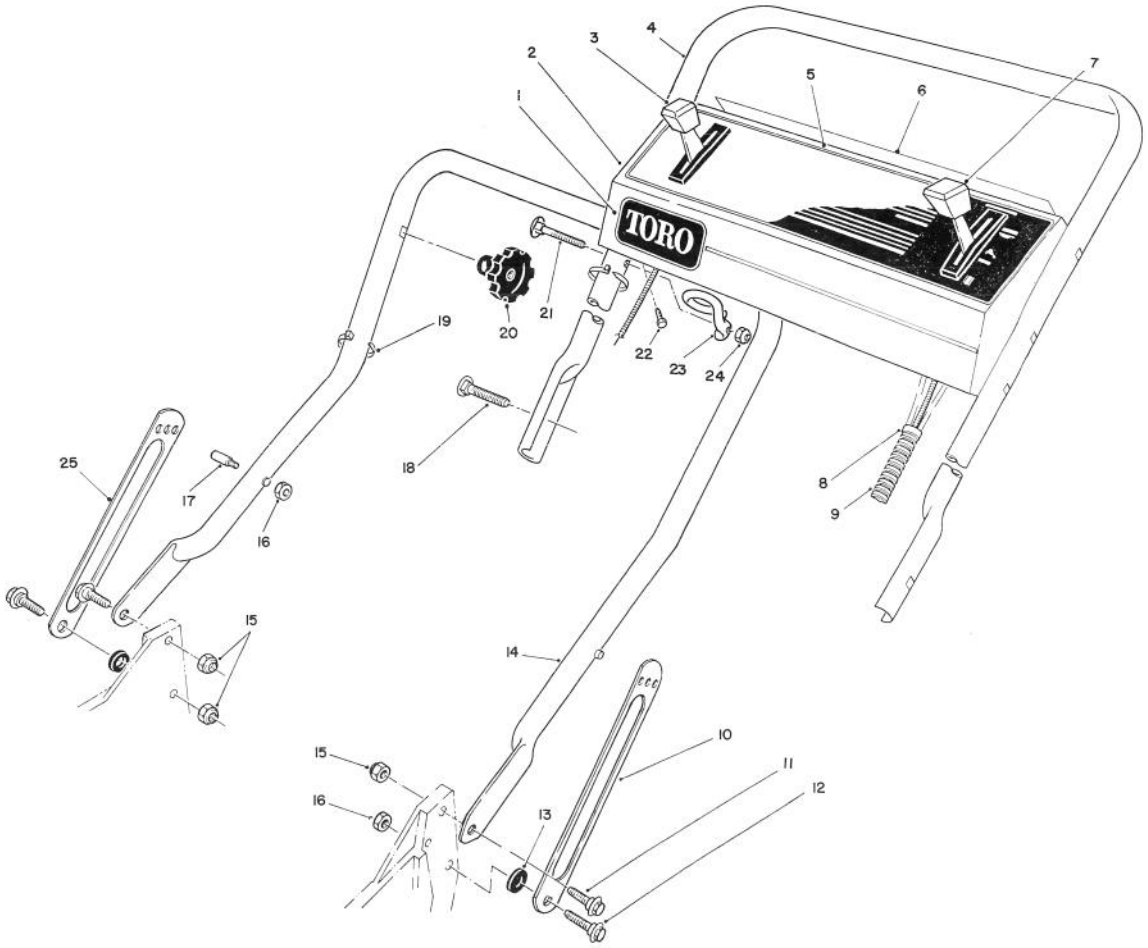

C-0768

HANDLE ASSEMBLY

Ref. No.	Part No.	Description	No. Used
1	84-5630	Decal - Toro	1
2	14-4759	Panel - Control (Incl. Ref. #5)	1
3	76-2711	Control - Ground Speed	
4	49-4237	Handle -Upper	1
5	80-4780	Decal - Instruction	1
6	66-1790	Decal - Rear Panel	1
7	74-3894	Control - Throttle (Bend Type #6) (Sheath Lg. 60") (Wire Lg. 1-3/4")	1
8	2412-50	Clip - Convoluted Tubing	4
9	46-6440	Cover - Control Cables	1
10	84-8360	Latch - Handle L.H.	1
11	27-7211	Screw - Shoulder	2
12	27-7210	Screw - Shoulder	2
13	3-3287	Spacer	2
14	43-1361	Lower Handle Assembly	1
15	3296-29	Nut - Lock	3
16	3296-47	Nut - Lock	3
†17	49-2750	Pin - handle	2
18	17-9421	Screw - Handle	2
19	3290-378	Tie - Cable	2
20	19-4050	Knob - Handle Release	2
21	46-6433	Screw - Handle	1
22	32104-76	Screw - Self Tap Slotted	5
23	46-8080	Guide - Rope	1
24	3296-42	Nut - Lock	1
25	84-8400	Latch - Handle R.H.	1

†Service Replacement Part

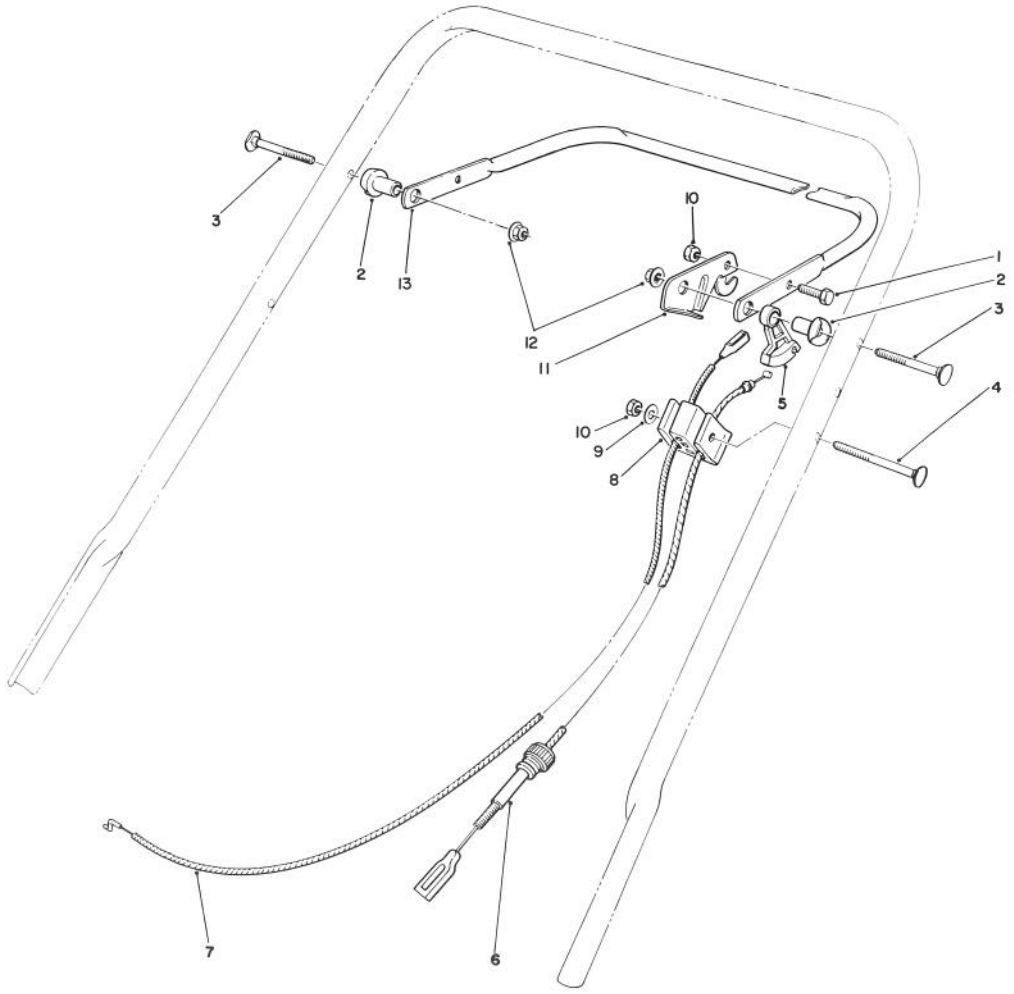

C-0330

TRACTION CONTROL ASSEMBLY

Ref. No.	Part No.	Description	No. Used
1	321-3	Screw - Hex Hd. Cap	1
2	49-1630	Support - Spacer	2
3	17-9421	Screw - Handle	2
4	46-6434	Screw - Handle	1
5	46-5520	Lever - Traction	1
6	46-5481	Cable - Traction	1
7	76-4330	Cable - Brake	1

Ref. No.	Part No.	Description	No. Used
8	46-6980	Support - Cable	1
9	3256-22	Washer - Flat	1
10	3296-42	Nut - Lock	2
11	66-5350	Lever - Control	1
12	3296-58	Nut - Lock	2
13	71-3080	Bar - Control	1

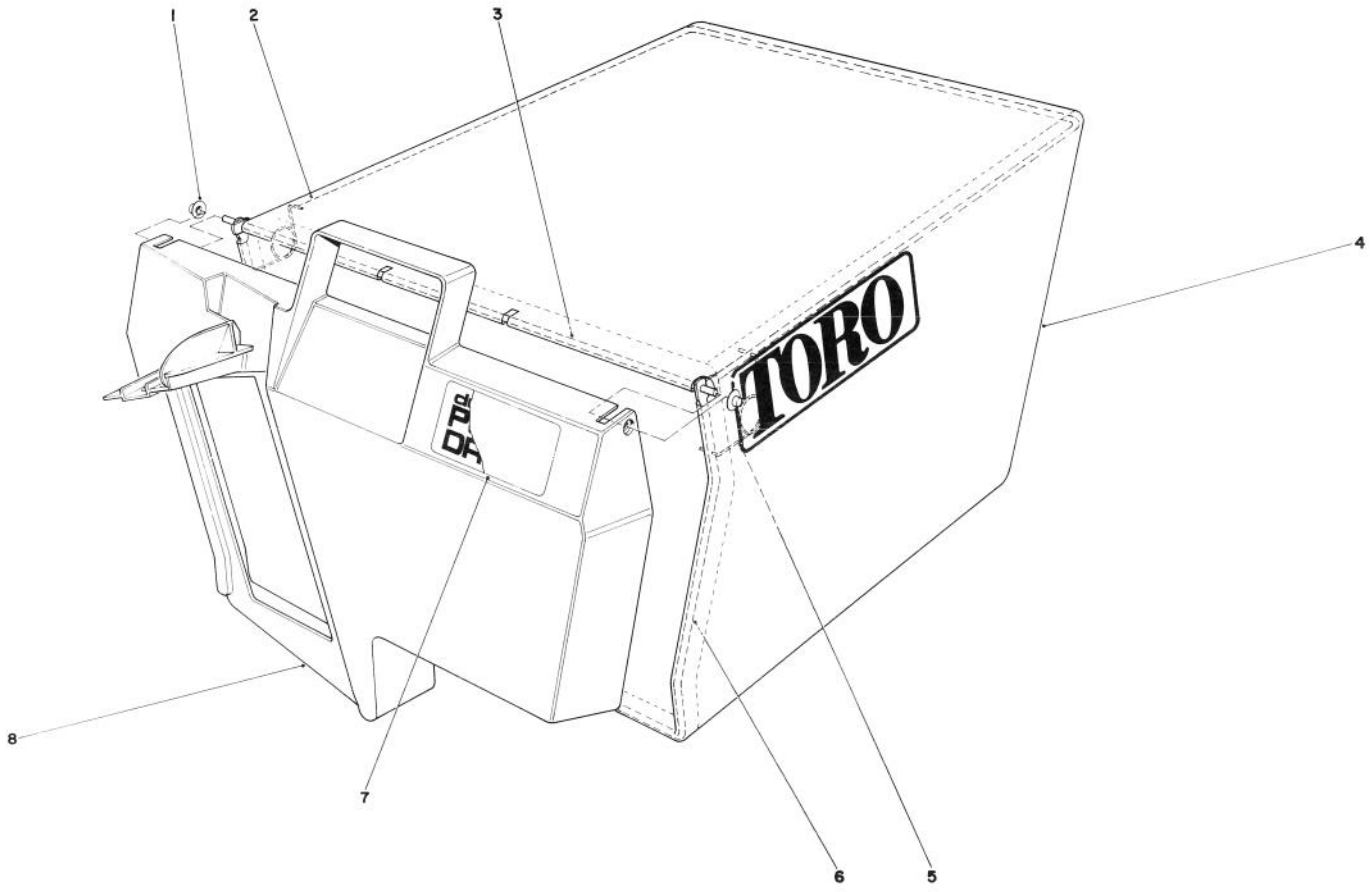

C-0331

GRASS BAG ASSEMBLY NO. 11-0189

Ref. No.	Part No.	Description	No. Used
1	3290-422	Nut - Push	2
2	42-4030	Bag Frame - Upper	1
3	33-4820	Hinge - Bag Door	1
4	44-0522	Bag - Grass	1

Ref. No.	Part No.	Description	No. Used
5	36-6910	Spring	2
6	42-4020	Frame - Bag	1
7	66-2150	Decal - Bag Door	1
8	37-1393	Door - Grass Bag	1

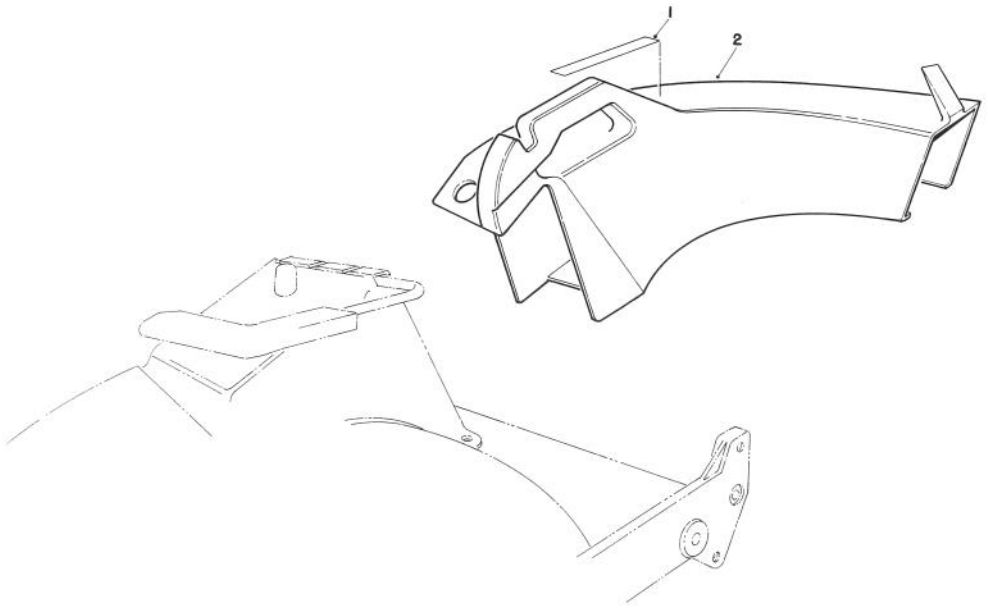

T-0716

SIDE DISCHARGE CHUTE MODEL NO. 59168 (OPTIONAL)

Ref. No.	Part No.	Description	No. Used
1	76-4780	Decal - Caution	1
2	13-2239	Chute - Discharge (Incl. Ref. #1)	1

Ref. No.	Part No.	Description	No. Used

*Not Illustrated

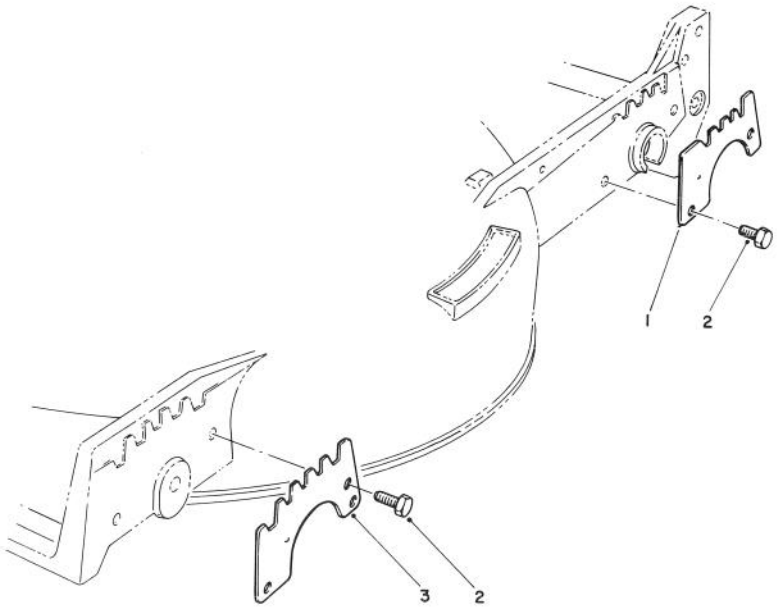

C-0332

WEAR PLATE MODEL NO. 49-4080 (OPTIONAL)

Ref. No.	Part No.	Description	No. Used
1	49-4070	Plate - Rear Wear	2
2	32104-17	Thread Forming Screw	8

Ref. No.	Part No.	Description	No. Used
3	43-5050	Plate - Wear Front	2

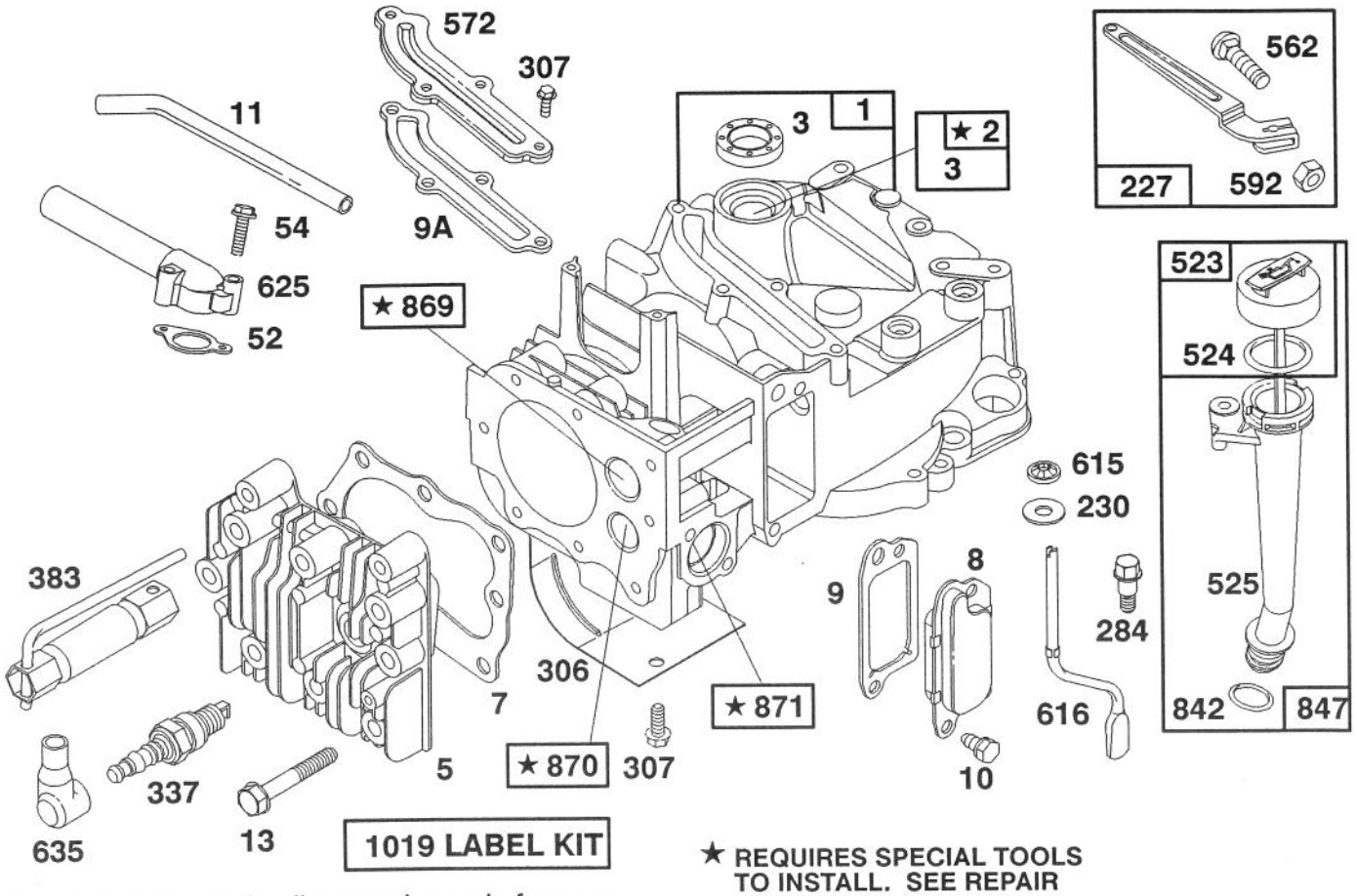

Assemblies include all parts shown in frames.

★ REQUIRES SPECIAL TOOLS TO INSTALL. SEE REPAIR INSTRUCTION MANUAL.

ENGINE BRIGGS & STRATTON MODEL 124702-3115-01

Ref. No.	Part No.	Description	No. Used
1	493260	Cylinder Assembly	2
2	293708	Bushing-Cylinder	1
		Note: Requires Special Tools for Installation.	
★3	393862	Seal-Oil	1
5	213861	Head-Cylinder	1
★7	272200	Gasket-Cylinder Hd.	1
8	399717	Breather-Valve Chamber	1
★9	271904	Gasket-Valve Cover	1
★9A	272238	Gasket-Baffle Plate	1
10	94222	Mounting Sem	1
11	231685	Tube-Breather	1
13	94547	Screw-Cylinder Hd.	1
★52	272199	Gasket-Intake Elbow	1
54	94526	Screw-Intake Elbow Mounting	1
227	492349	Lever Assembly-Gov.	1
230	67072	Washer-Governor Crank	1
284	94511	Screw-Hex. Head	1
306	224324	Shield-Cylinder	1
307	94515	Screw-Hex. Head	1
337	802592	Plug-Spark	1
383	89838	Wrench-Spark Plug	1

Ref. No.	Part No.	Description	No. Used
523	493950	Cap with Dipstick-Oil Filler	1
524	280393	Seal-Filler Tube	1
525	493952	Tube-Oil Filler	1
562	92613	Bolt-Governor Lever	1
572	224328	Baffle-Cylinder	11
592	231082	Nut-Hex.	
615	94474	Pushnut (Governor Crank)	1
616	262578	Crank-Governor	1
625	492717	Tube-Fuel Intake	1
635	66538	Elbow-Spark Plug	1
842	280966	Seal-O-Ring	1
847	493459	Oil Fill Tube and Dipstick Assy.	1
869	213512	Seat-Intake Valve	1
870	213513	Seat-Exhaust Valve	1
871	262001	Guide-Exhaust Valve	1
		Note: 63709 Guide-Intake Valve See Repair Instruction Manual.	1
1019	494256	Label Kit	1

★ Included in Gasket Set- Part No. 493263.

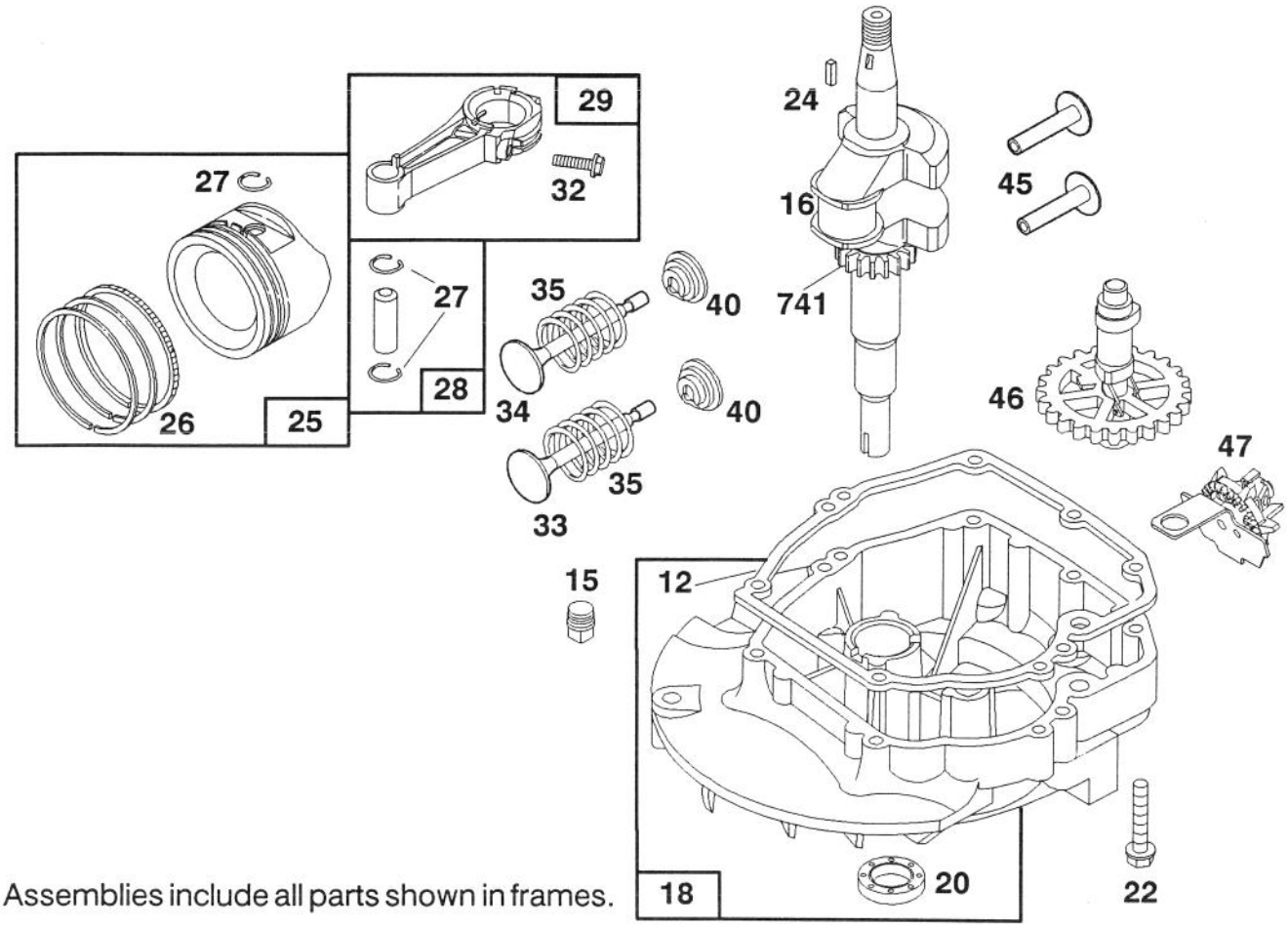

Assemblies include all parts shown in frames.

ENGINE BRIGGS & STRATTON MODEL 124702-3115-01

Ref. No.	Part No.	Description	No. Used
★12	272198	Gasket-Crankcase	1
15	94613	Plug-Oil Drain	1
16	493731	Crankshaft	1
		Note: Order 94388 For Timing Gear Key	
18	493279	Sump-Engine	1
★20	399781	Seal-Oil	1
22	94220	Screw-Sump Mtg. Sem	1
		Note: 94612 Screw-Hex. Washer Head (One (1) Used in Hole Nearest Breather)	
24	222698	Key-Flywheel	1
25	493262	Piston Assy.-Standard	1
	493385	Piston Assy.-.010" O.S.	1
	493386	Piston Assy.-.020" O.S.	1
	493387	Piston Assy.-.030" O.S.	1
		PISTON RING SETS:	1
		Note: For Chrome Piston Ring Set- Standard Size-Order Part No. 493391.	
26	493261	Ring Set-Std. Piston	1
	493388	Ring Set-.010" O.S. Piston	1
	493389	Ring Set-.020" O.S. Piston	1
	493390	Ring Set-.030" O.S. Piston	1
27	26026	Lock-Piston Pin	1
28	298909	Pin Assembly-Piston-Standard	1
	298908	Pin Assembly-Piston-.005" O.S.	1
29	490566	Rod Assembly- Connecting	1
		Note: For Connecting Rod with .020" Undersize Crankpin Bearing- Order No. 490743.	1
32	94405	Screw-Connecting Rod	1
33	262651	Valve-Exhaust	1
34	262652	Valve-Intake	1
35	262224	Spring-Valve	1
40	93312	Retainer-Valve Spring	1
45	262204	Tappet-Valve	1
46	492830	Gear-Cam	1
47	493737	Oil Slinger Gear and Bracket	1
741	262598	Gear-Timing	1

★ Included in Gasket Set- Part No. 493263.

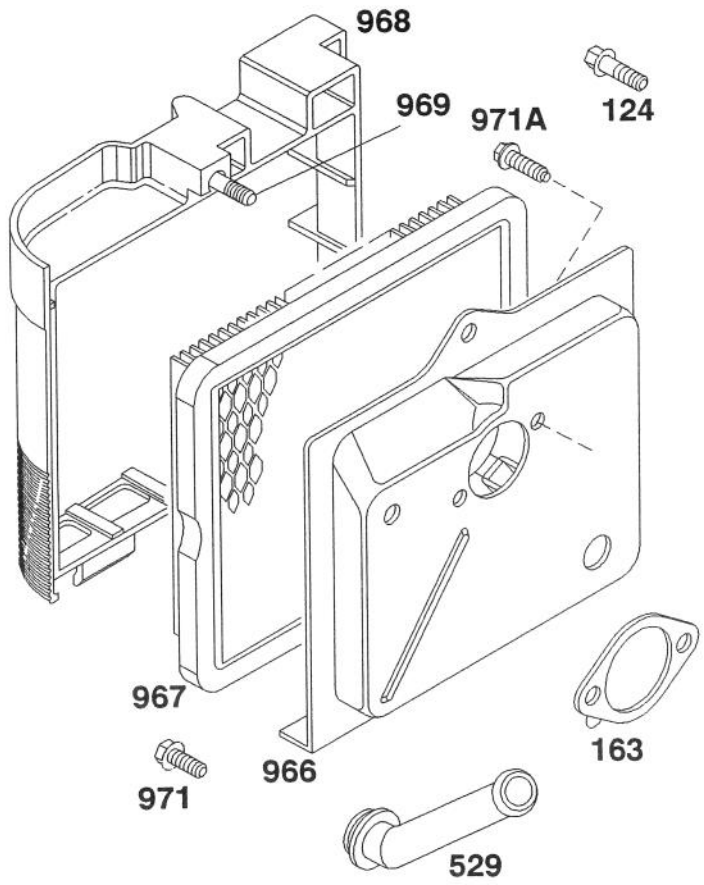

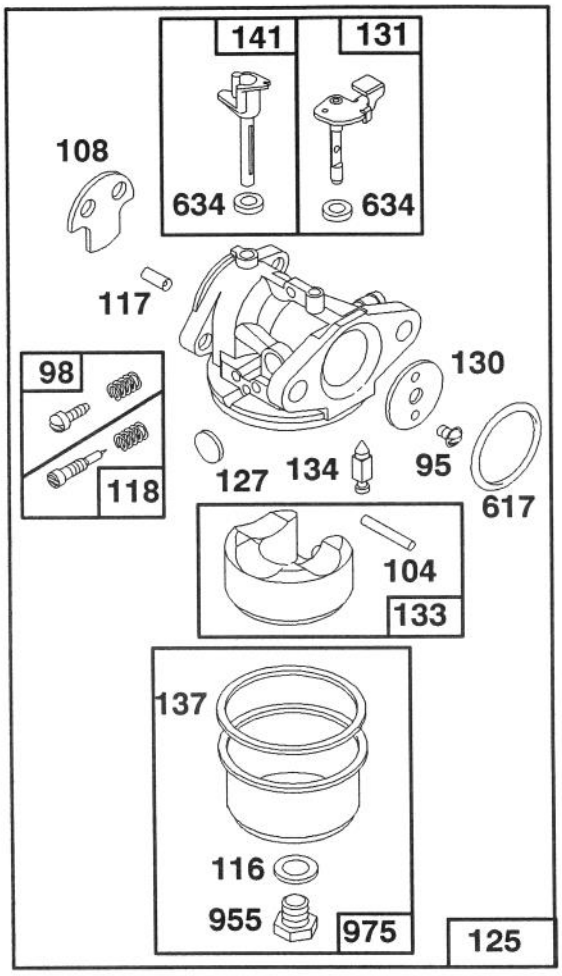

Assemblies include all parts shown in frames.

ENGINE BRIGGS & STRATTON MODEL 124702-3115-01

Ref. No.	Part No.	Description	No. Used
95	94098	Screw-Throttle Valve Mounting Sem	1
98	398185	Screw-Idle Adjustment	1
•104	231371	Pin-Float Hinge	1
108	223471	Valve-Choke	1
••◆116		Gasket-Sealing (Sold in Kit Only).	1
•117		Jet (Sold in Kit Only).	1
118	493765	Valve and Spring- Needle	1
124	94525	Screw-Carburetor Mtg.	1
125	494217	Carburetor Assembly	1
•127		Plug-Welch (Sold in Kit Only).	1
130	223470	Valve-Throttle	1
131	493267	Shaft and Lever- Throttle	1
133	398187	Float Assy.-Carburetor	1
•134	398188	Valve-Inlet (Includes Seat)	1

Ref. No.	Part No.	Description	No. Used
••◆137		Gasket-Bowl (Sold in Kit Only).	1
141	494218	Shaft-Choke	1
★163	272296	Gasket-Air Cleaner	1
529	280943	Grommet-Breather	1
••◆617	270344	Seal-Fuel Intake Tube	1
••◆634		Washer-Shaft (Sold in Kit Only)	1
955	493869	Screw-Bowl Mtg.	1
966	492363	Base-Air Cleaner	1
967	491588	Filter-Air	1
968	280937	Cover-Air Cleaner	1
969	94120	Screw-Cover Mtg.	1
971	94269	Screw-Air Cleaner	1
971A	94121	Screw-Base to Carburetor	1
975	493640	Bowl Assy.	1

• Included in Carburetor Overhaul Kit- Part No. 493762.
◆ Included in Carburetor Gasket Set- Part No. 490937.
★ Included on Gasket Set- Part No. 493263.

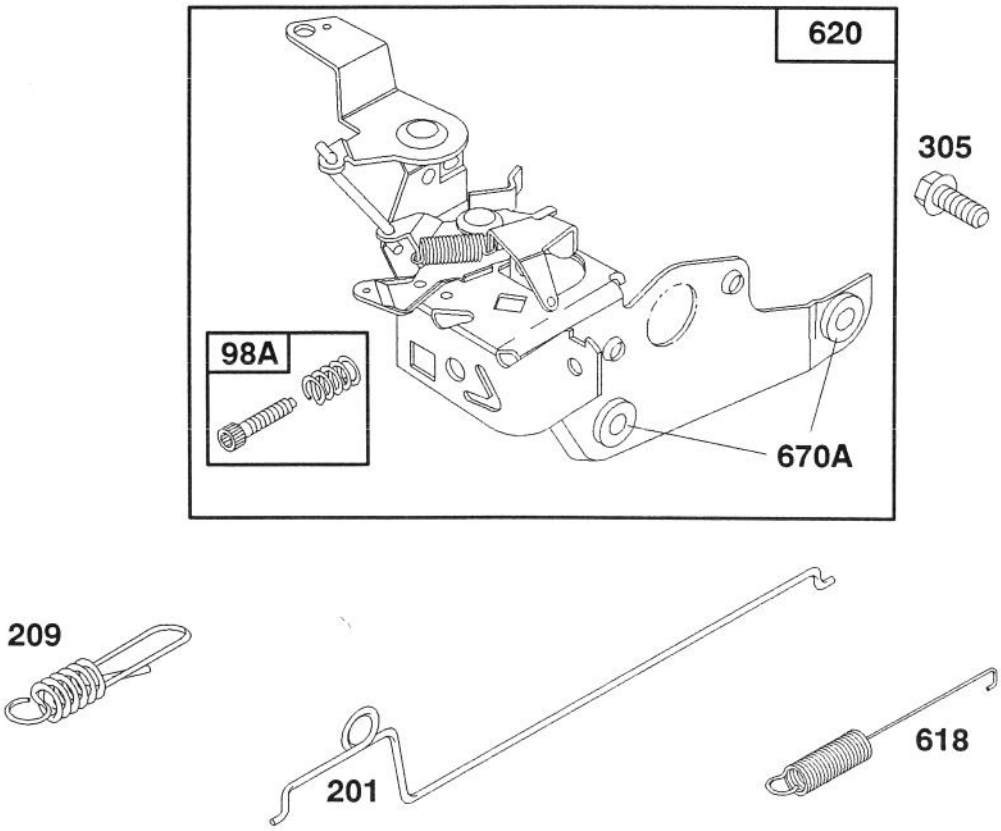

Assemblies include all parts shown in frames.

ENGINE BRIGGS & STRATTON MODEL 124702-3115-01

Ref. No.	Part No.	Description	No. Used
98A	493280	Screw Assy.- Speed Adj.	1
201	262579	Link-Governor	1
209	262661	Spring-Governor	1
305	94513	Screw-Hex. Head Sem	1

Ref. No.	Part No.	Description	No. Used
618	262749	Spring-Choke Return	1
620	493894	Bracket Assembly- Carburetor Control	1
670A	493823	Spacer-Carburetor Bracket	1

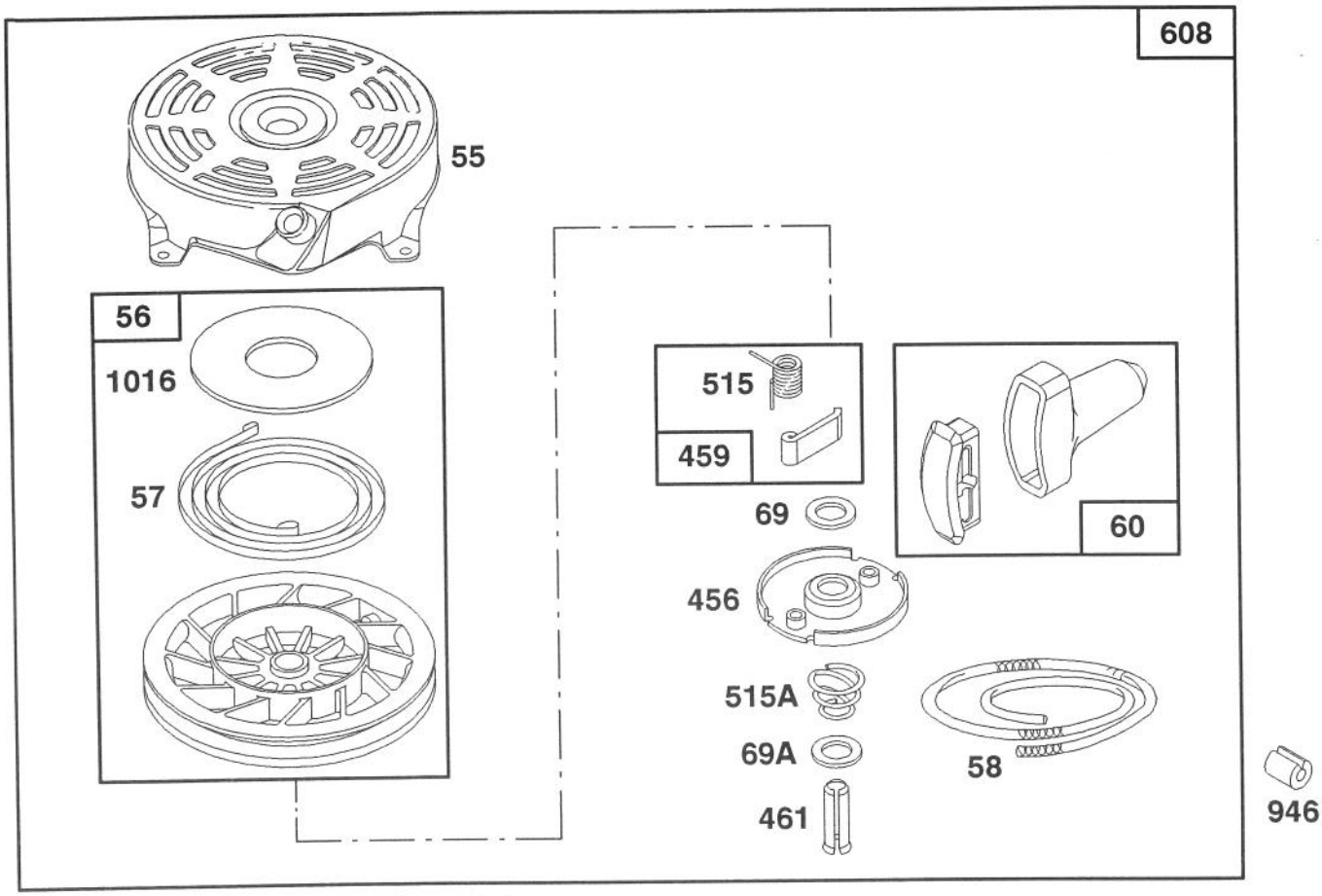

Assemblies include all parts shown in frames.

ENGINE BRIGGS & STRATTON MODEL 124702-3115-01

Ref. No.	Part No.	Description	No. Used
55	492831	Housing-Rewind Starter	1
56	492832	Pulley-Rewind Starter	1
57	262594	Spring-Rewind Starter	1
58	280399	Rope-Rewind Starter	1
60	393152	Handle-Rewind Starter	1
69	280973	Washer-Rewind Starter	1
69A	224322	Washer-Rewind Starter	1
456	224321	Retainer-Rewind Starter	1

Ref. No.	Part No.	Description	No. Used
459	492833	Pawl-Starter	1
461	262626	Pin-Starter	1
515	262556	Spring-Pawl	1
515A	262625	Spring-Torsion	1
608	493295	Starter Assy.-Rewind	1
946	223294	Stop Rope	1
1016	224278	Cover-Rewind Starter	1

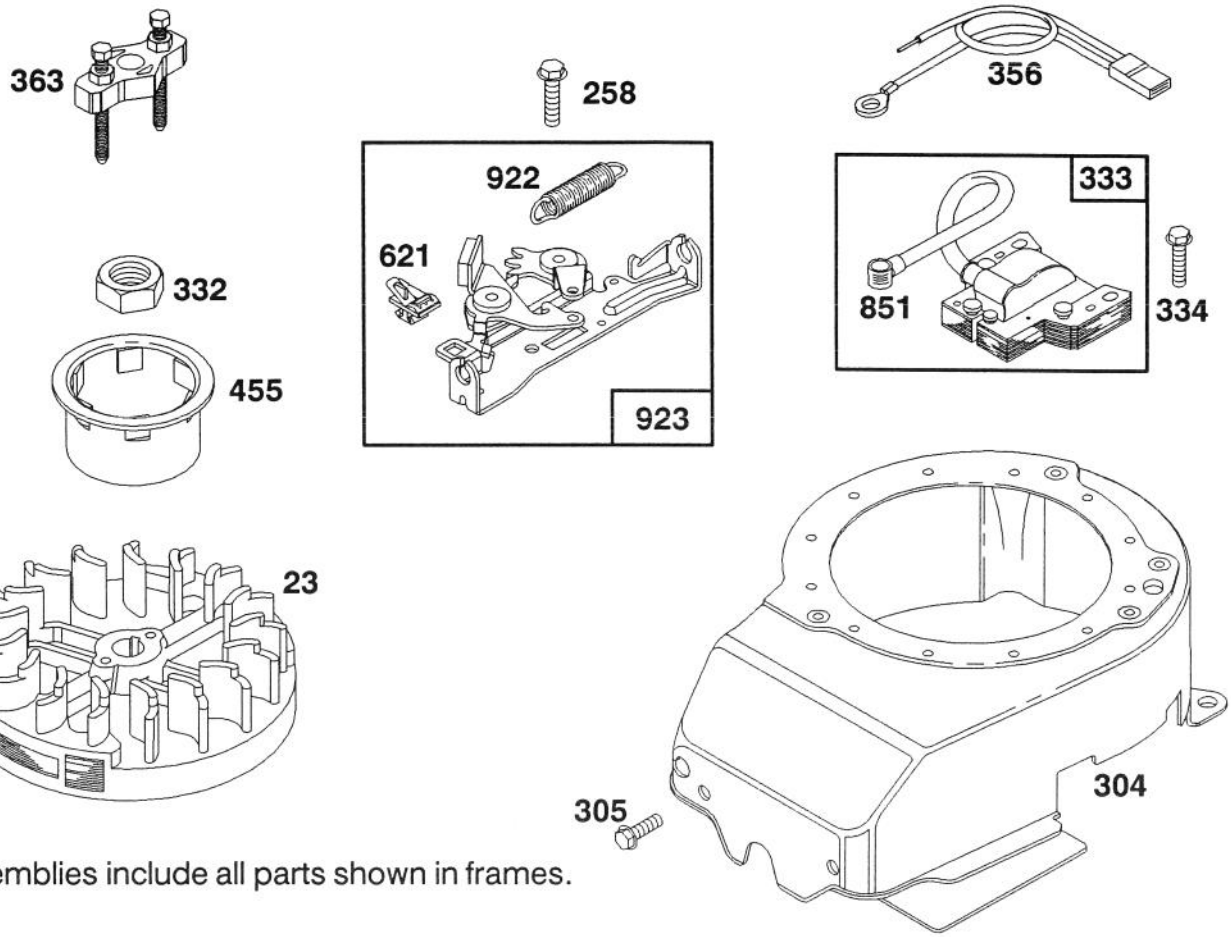

Assemblies include all parts shown in frames.

ENGINE BRIGGS & STRATTON MODEL 124702-3115-01

Ref. No.	Part No.	Description	No. Used
23	492177	Flywheel-Magneto	1
258	94512	Screw-Hex. Head	1
304	493293	Housing- Blower	1
305	94513	Screw-Hex. Head Sem	1
332	92284	Nut-Flywheel	1
333	802574	Armature-Magneto	1
334	93381	Screw-Armature Mounting Sem	1

Ref. No.	Part No.	Description	No. Used
356	398808	Wire-Ground	1
363	19069	Puller-Flywheel (Optional Accessory)	1
455	224250	Cup-Starter	1
621	396847	Switch-Stop	1
851	221798	Terminal-Ignition Cable	1
922	262640	Spring-Brake	1
923	492918	Brake Assy.	1

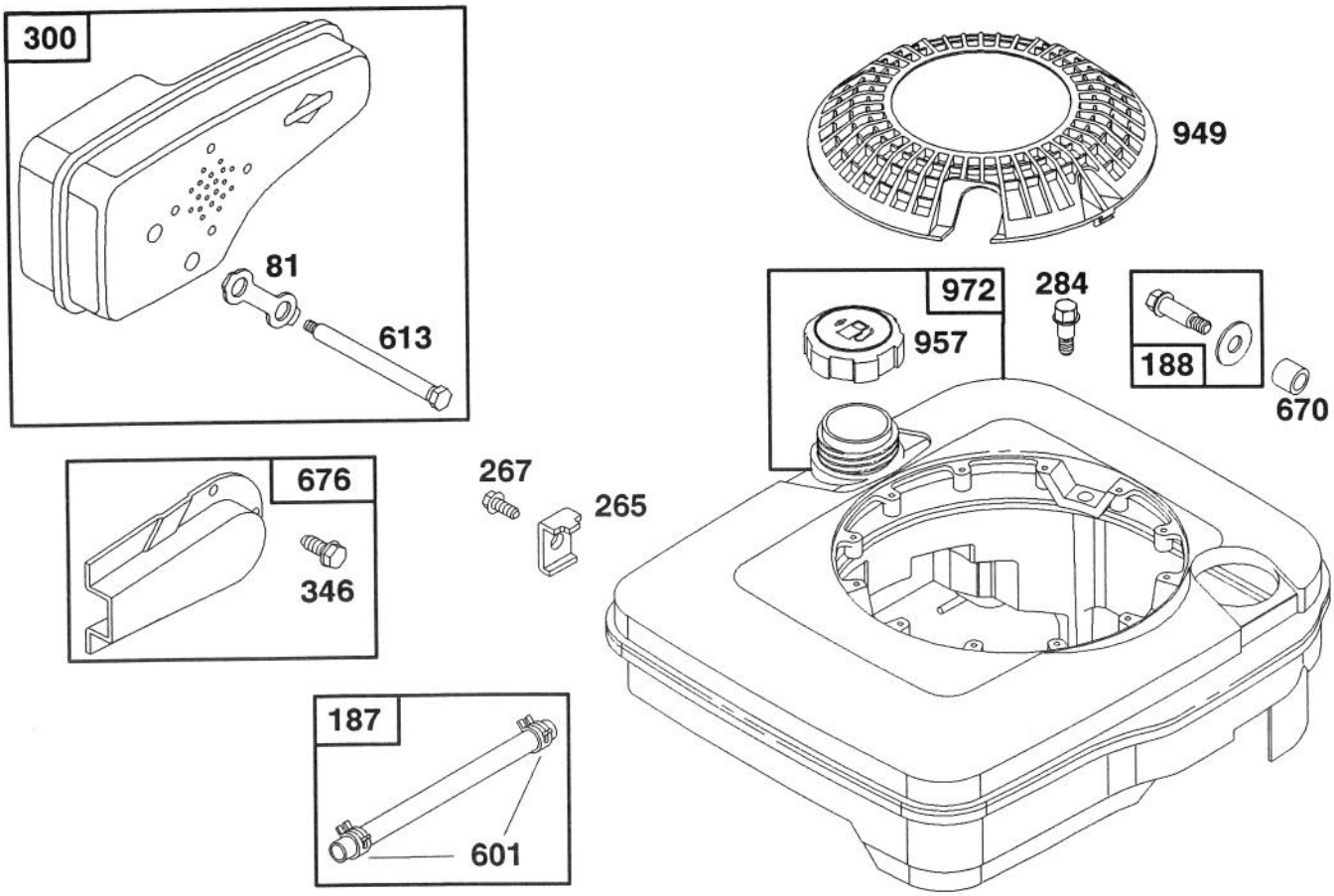

Assemblies include all parts shown in frames.

ENGINE BRIGGS & STRATTON MODEL 124702-3115-01

Ref. No.	Part No.	Description	No. Used
81	223664	Lock-Muffler Screw	1
187	492790	Hose-Fuel	1
188	398540	Screw-Tank Mounting (Includes Washer)	1
265	221535	Clamp-Casing	1
267	94204	Screw-Clamp Mtg.	1
284	94511	Screw-Hex. Head	1
300	490547	Muffler-Exhaust	1

Ref. No.	Part No.	Description	No. Used
346	93705	Screw-Hex. Head	1
601	93807	Clamp-Hose	1
613	94231	Screw-Muffler Mtg.	1
670	280512	Spacer-Fuel Tank	1
676	493871	Deflector-Muffler	1
949	281136	Screen-Static	1
957	397974	Cap Assy.-Fuel	1
972	494358	Tank Assembly-Fuel	1

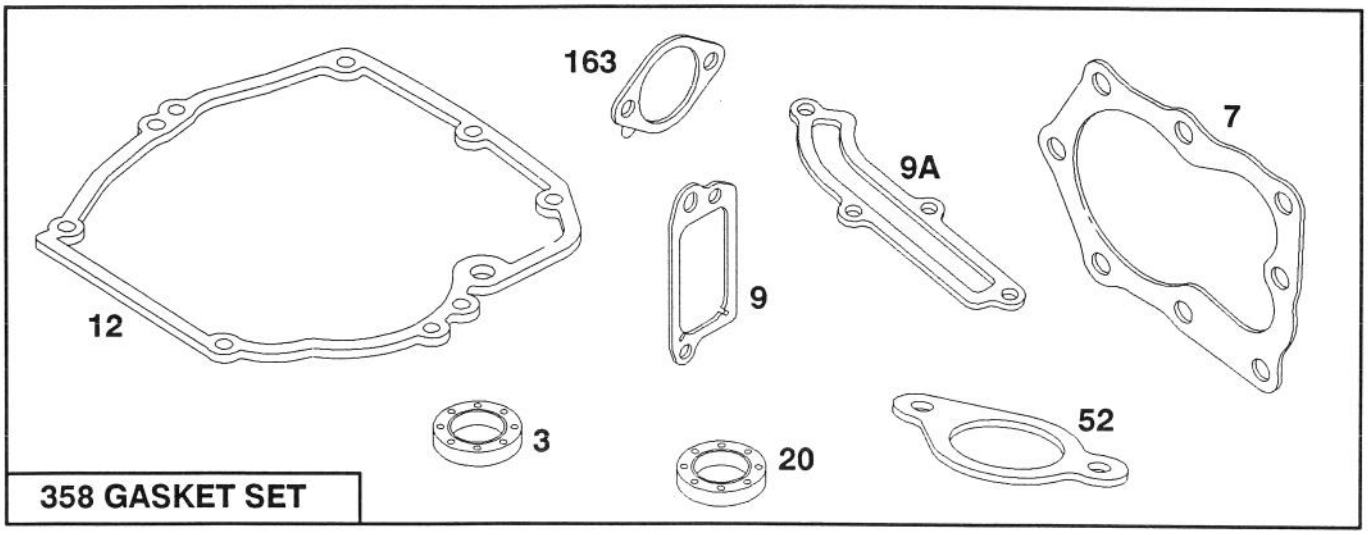

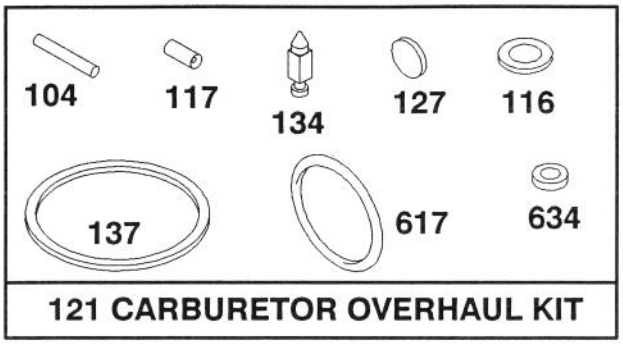

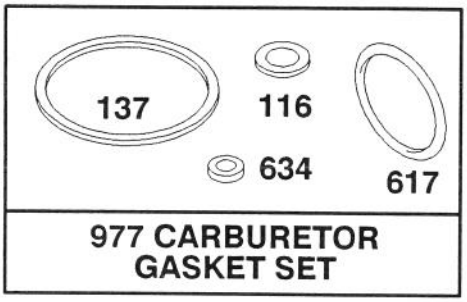

Assemblies include all parts shown in frames.

ENGINE BRIGGS & STRATTON MODEL 124702-3115-01

Ref. No.	Part No.	Description	No. Used
★3	393862	Seal-Oil	1
★7	272200	Gasket-Cylinder Hd.	1
★9	271904	Gasket-Valve Cover	1
★9A	272238	Gasket-Baffle Plate	1
★12	272198	Gasket-Crankcase	1
★20	399781	Seal-Oil	1
★52	272199	Gasket-Intake Elbow	1
•104	231371	Pin-Float Hinge	1
••◆116		Gasket-Sealing (Sold in Kit Only).	1
•117		Jet (Sold in Kit Only).	1
121	493762	Carburetor Overhaul Kit	1

Ref. No.	Part No.	Description	No. Used
•127		Plug-Welch (Sold in Kit Only).	1
•134	398188	Valve-Inlet (Includes Seat)	1
••◆137		Gasket-Bowl (Sold in Kit Only).	1
★163	272296	Gasket-Air Cleaner	1
358	493263	Gasket Set	1
••◆617	270344	Seal-Fuel Intake Tube	
••◆634		Washer-Shaft (Sold in Kit Only)	1
977	490937	Gasket Set-Carburetor	1

• Included in Carburator Overhaul Kit- Part No. 493762.
◆ Included in Carburetor Gasket Set- Part No. 490937.
★ Included in Gasket Set- Part No. 493263.

PRODUCT CHANGES

In an effort to make improvements available to TORO owners as quickly as possible, minor changes are incorporated into Toro's products from time to time that do not become immediately shown in the Parts Catalog. If such a change has been made in your unit, which is not reflected in your manual, see your TORO Distributor or his Authorized TORO Service Dealer for information and part numbers.

COUNTRIES OTHER THAN THE UNITED STATES OR CANADA

Customers who have purchased TORO products exported from the United States or Canada should contact their Toro Distributor (Dealer) to obtain guarantee policies for your country, province or state. If for any reason you are dissatisfied with your Distributor's service or have difficulty obtaining guarantee information, contact the TORO importer. If all other remedies fail, you may contact us at The Toro Company.

MAINTENANCE RECORD

Date								

Compliance with Radio Interference Regulations Certified.
Certifie Conforme au Reglement sur le Brouillage Radioelectrique.

MAINTENANCE RECORD

Date								