FORM NO. 3314-989

TORO®

MODEL NO. 16212B-2000001 & UP

PARTS CATALOG

# 21" SIDE DISCHARGE MOWER

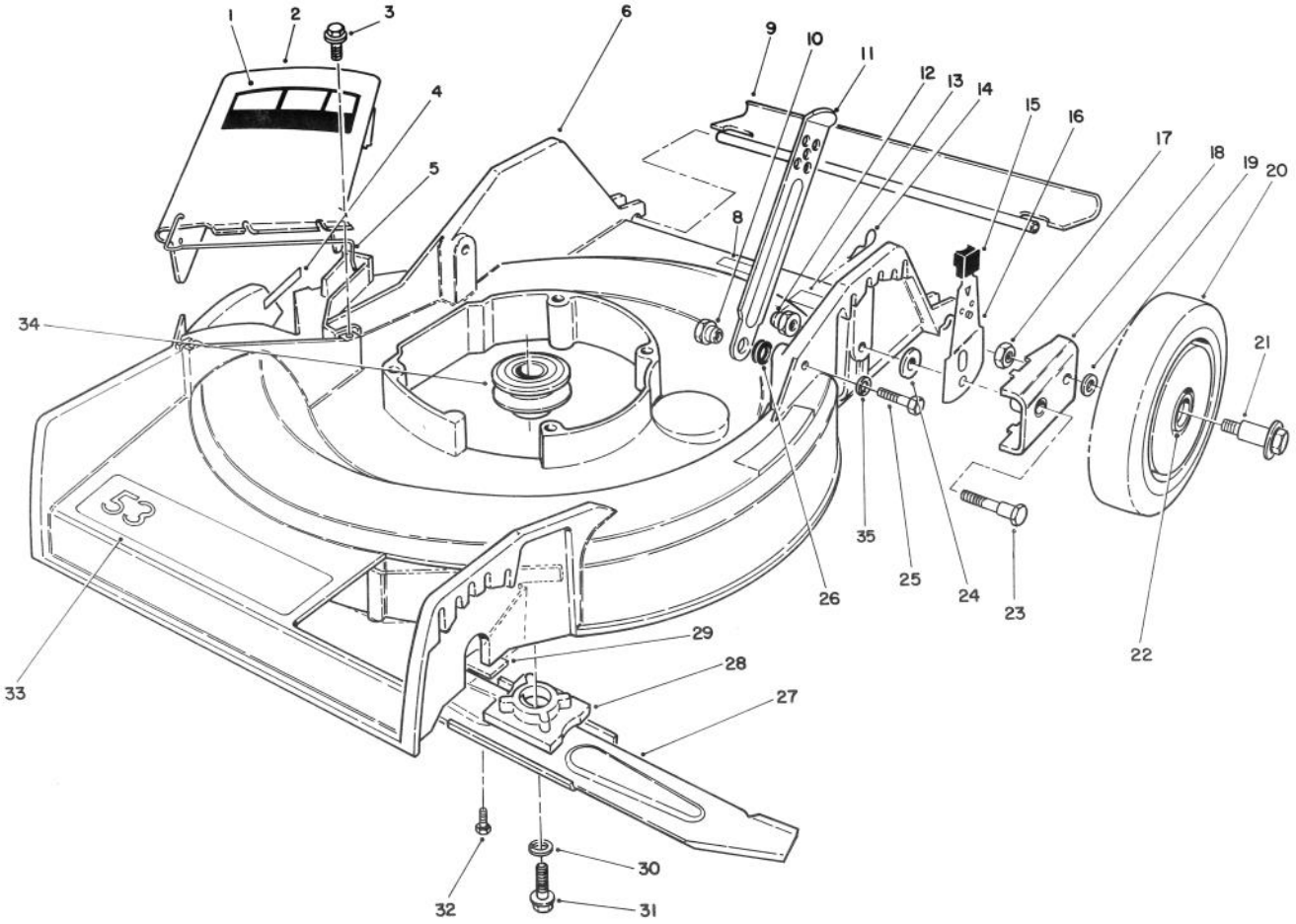


C-0189

## HOUSING ASSEMBLY

| Ref. No. | Part No. | Description | No. Used |
|---|---|---|---|
| 1 | 62-4210 | Decal - Danger | 1 |
| 2 | 13-5909 | Deflector (Incl. Ref. #1 & 5) | 1 |
| 3 | 46-6811 | Screw - Washer Hd. | 2 |
| 4 | 62-4200 | Decal - Danger | 1 |
| 5 | 20-2640 | Spring - Hinge | 1 |
| 6 | 13-3489 | Housing (Incl. Ref. #4) | 1 |
| 8 | 66-0680 | Decal - French Regulation | 1 |
| 9 | 66-5990 | Shield - Rear | 1 |
| 10 | 27-6520 | Nut - Shoulder | 2 |
| 11 | 82-7620 | Latch - Handle | 2 |
| 12 | 12-2080 | Nut - Shoulder | 2 |
| 13 | 66-2000 | Decal - Noise Rating | 1 |
| 14 | 3290-255 | Hairpin Cotter | 2 |
| 15 | 25-7740 | Knob - Spring Arm | 2 |
| 16 | 66-9260 | Spring Arm Assembly L.H. | 1 |
| * | 66-9250 | Spring Arm Assembly R.H. | 1 |

| Ref. No. | Part No. | Description | No. Used |
|---|---|---|---|
| 17 | 52-3620 | Locknut | 2 |
| 18 | 47-2940 | Pivot Arm Assembly | 2 |
| 19 | 40-1940 | Washer - Wheel Bolt | 2 |
| 20 | 11-9509 | Wheel & Tire Assembly (Incl. Ref. #22) | 2 |
| 21 | 27-6230 | Bolt - Wheel | 2 |
| 22 | 27-6250 | Bushing | 4 |
| 23 | 44-5271 | Screw - Pivot | 2 |
| 24 | 33-0390 | Washer - Pivot | 2 |
| 25 | 322-7 | Screw - Cap, Hex Hd. | 2 |
| 26 | 3-3287 | Spacer - Handle Latch | 2 |
| 27 | 20-2720 | Blade - 21" | 1 |
| 28 | 49-7900 | Retainer - Blade | 1 |
| 29 | 67-9880 | Shield - Front | 1 |
| 30 | 3253-22 | Washer - Lock | 1 |
| 31 | 26-0671 | Screw - Blade | 1 |
| 32 | 32144-70 | Screw | 4 |
| 33 | 70-1590 | Decal - 53 | 1 |

*Not Illustrated

TPS

© The TORO Company - 1991

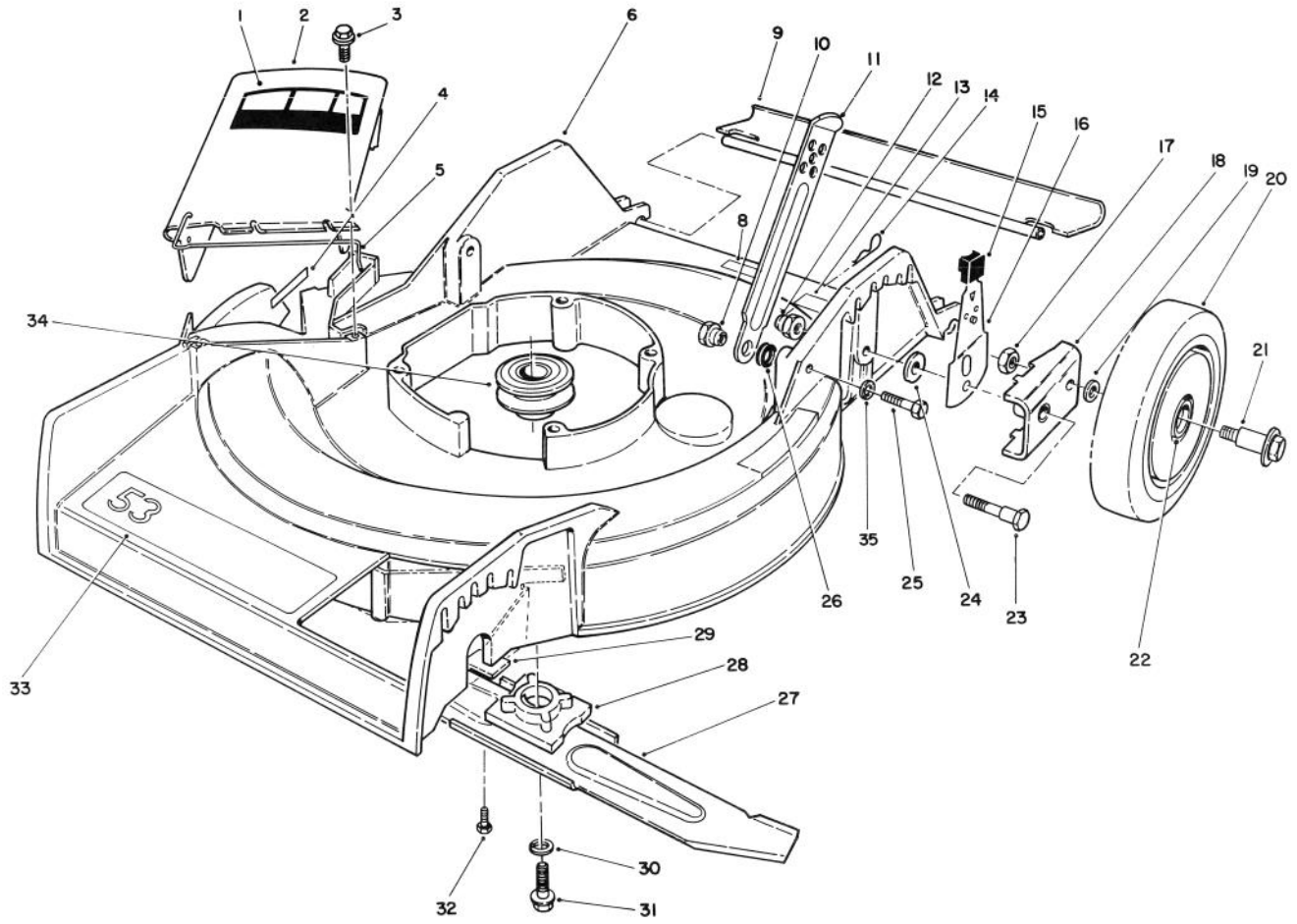


C-0189

# HOUSING ASSEMBLY (Continued)

| Ref. No. | Part No. | Description | No. Used |
|---|---|---|---|
| 34 | 46-7910 | Pulley - Driver | 1 |
| 35 | 3253-4 | Washer - Lock | 2 |
| * | 46-1930 | 5/8" Wrench Assembly | 1 |

| Ref. No. | Part No. | Description | No. Used |
|---|---|---|---|
| * | 46-1040 | Wrench 3/4" Spark Plug | 1 |
| * | 46-1041 | Key Wrench | 1 |

*Not Illustrated

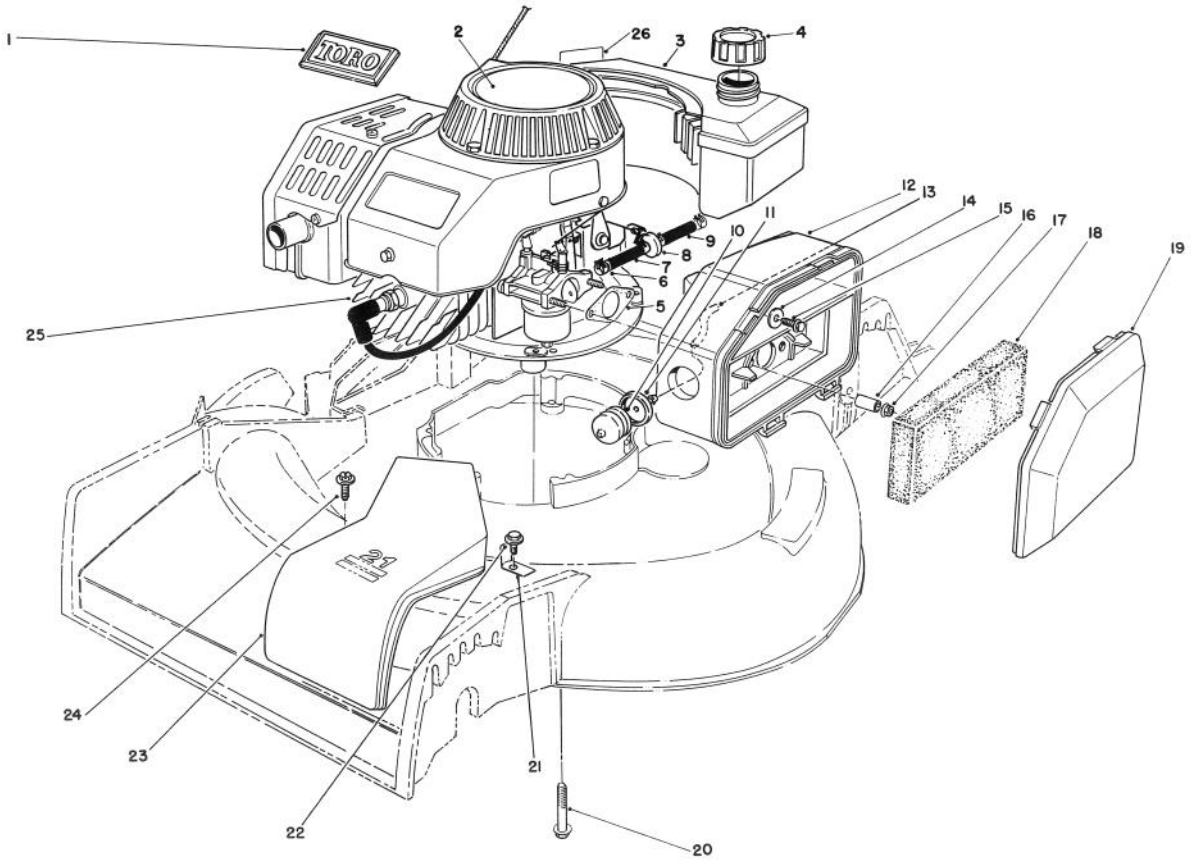


C-0184

# ENGINE ASSEMBLY

| Ref. No. | Part No. | Description | No. Used |
|---|---|---|---|
| 1 | 46-8290 | Plate - Toro Logo | 1 |
| 2 | 57-3110 | Decal - Recoil | 1 |
| 3 | 81-0162 | Fuel Tank Assembly | 1 |
| 4 | 55-3575 | Gas Cap Assembly | 1 |
| 5 | 81-0090 | Gasket - Air Cleaner | 1 |
| 6 | 2412-95 | Clamp - Fuel Line | 4 |
| 7 | 51-3216 | Fuel Line | 1 |
| 8 | 56-6360 | Filter - Fuel | 1 |
| 9 | 51-3215 | Fuel Line | 1 |
| 10 | 66-7460 | Bulb - Primer | 1 |
| 11 | 44-2750 | Body - Primer | 1 |
| 12 | 63-9330 | Air Cleaner | 1 |
| 13 | 44-3172 | Hose - Primer | 1 |

| Ref. No. | Part No. | Description | No. Used |
|---|---|---|---|
| 14 | 3256-16 | Washer - Flat | 1 |
| 15 | 51-2690 | Screw - Washer Hd. | 1 |
| 16 | 62-3980 | Sleeve | 2 |
| 17 | 50-7180 | Locknut | 2 |
| 18 | 63-9380 | Foam Element - Air Cleaner | 1 |
| 19 | 63-9340 | Cover - Air Cleaner | 1 |
| 20 | 66-9302 | Capscrew - Hex Hd. | 3 |
| 21 | 70-8080 | Clamp - Cable | 1 |
| 22 | 32144-70 | Screw - Thread Forming | 1 |
| 23 | 46-4780 | Cover - Belt | 1 |
| 24 | 12-5450 | Screw - Thread Forming | 2 |
| 25 | 51-0413 | Engine (Complete) | 1 |
| 26 | 40-2440 | Decal - Maintenance | 1 |

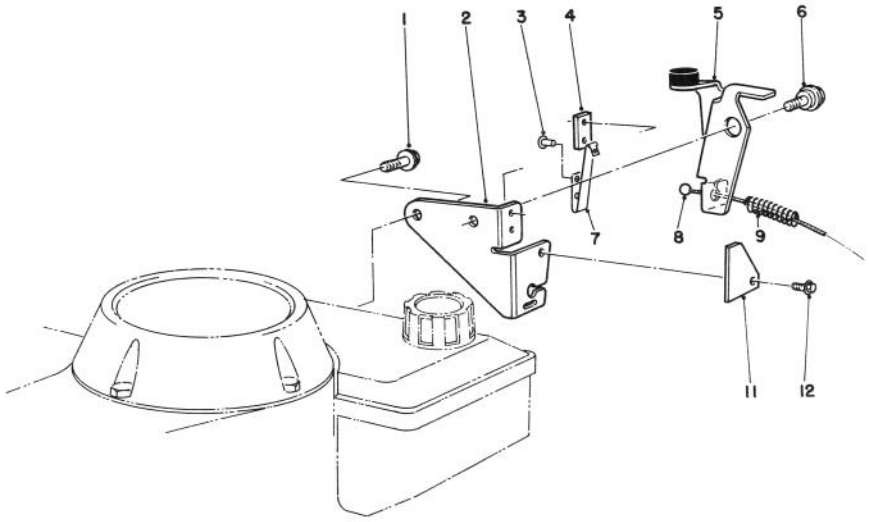


C-0185

# BRAKE ASSEMBLY

| Ref. No. | Part No. | Description | No. Used |
|---|---|---|---|
| 1 | 46-0790 | Screw - Self Tapping | 1 |
| 2 | 14-6009 | Plate - Mounting Assembly (incl. Ref. #3, 4 & 7) | 1 |
| 3 | 3290-459 | Rivet | 2 |
| 4 | 77-5260 | Strap - Insulation | 1 |
| 5 | 66-5380 | Brake Plate Assembly | 1 |

| Ref. No. | Part No. | Description | No. Used |
|---|---|---|---|
| 6 | 56-6190 | Screw - Shoulder, Metric | 1 |
| 7 | 60-9010 | Strap - Ground | 1 |
| 8 | 85-6902 | Cable - Brake | 1 |
| 9 | 66-5370 | Spring - Compression | 1 |
| 11 | 53-4690 | Stop - Ground Strap | 1 |
| 12 | 12-5450 | Screw - Self Tapping | 1 |

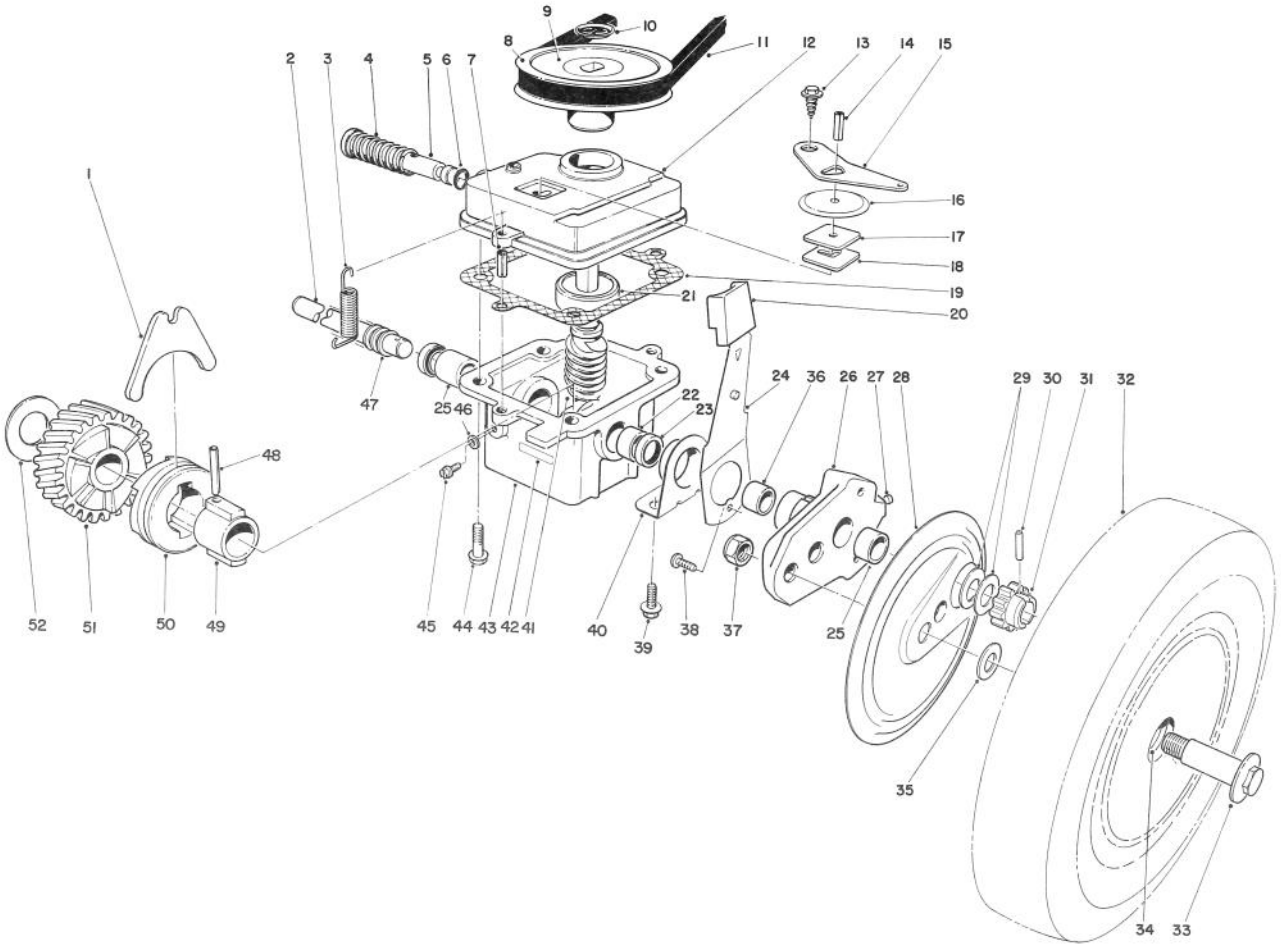


C-0188

# GEAR CASE ASSEMBLY

| Ref. No. | Part No. | Description | No. Used |
|---|---|---|---|
| 1 | 5-3247 | Fork - Shifter | 1 |
| 2 | 66-6020 | Shaft - Drive | 1 |
| 3 | 17-4490 | Spring - Tension, Belt | 1 |
| 4 | 3-0731 | Spring | 1 |
| 5 | 46-8240 | Rod - Shifter | 1 |
| 6 | 237-137 | O-Ring | 1 |
| 7 | 32121-1 | Pin - Roll | 2 |
| 8 | 18-9760 | Pulley | 1 |
| 9 | 33-2450 | Decal - Caution | 1 |
| 10 | 3290-346 | Retainer - Push On | 1 |
| 11 | 5-4505 | V-Belt | 1 |
| 12 | 39-1101 | Cover - Gear Case | 1 |
| 13 | 32140-64 | Screw - Self Tapping | 1 |
| 14 | 32121-114 | Pin - Roll | 1 |
| 15 | 5-3252 | Arm - Shifter | 1 |
| 16 | 52-7380 | Cover - Dust, Transmission | 1 |
| 17 | 52-7370 | Filter - Dust | 1 |
| 18 | 3-0681 | Plate - Latch | 1 |
| 19 | 36-1000 | Gasket - Gear Case | 1 |
| 20 | 25-7740 | Knob - Arm | 2 |
| 21 | 47-7250 | Bearing - Ball | 1 |
| 22 | 47-2890 | Bushing | 1 |
| 23 | 47-6730 | Seal - Oil | 2 |
| 24 | 67-9370 | Arm - Spring | 2 |
| 25 | 47-2900 | Bushing | 3 |

| Ref. No. | Part No. | Description | No. Used |
|---|---|---|---|
| 26 | 66-6001 | Arm - Pivot (Incl. Ref. #25, 27 & 36) | 2 |
| 27 | 302-56 | Fitting - Grease | 2 |
| 28 | 63-5270 | Cover - Wheel | 2 |
| 29 | 46-6510 | Washer - Thrust | 4 |
| 30 | 32121-98 | Pin - Coil | 2 |
| 31 | 46-6520 | Gear - Pinion | 2 |
| 32 | 11-9519 | Wheel, Tire & Gear Assy (Incl. Ref. #34) | 2 |
| 33 | 27-6230 | Bolt - Wheel | 2 |
| 34 | 27-6250 | Bushing - Wheel | 4 |
| 35 | 40-1940 | Washer - Wheel Bolt | 2 |
| 36 | 70-9760 | Bushing | 2 |
| 37 | 52-3620 | Nut | 2 |
| 38 | 63-8590 | Screw - Button Hd | 2 |
| 39 | 32144-70 | Screw - Thread Forming | 4 |
| 40 | 68-9000 | Cap - End | 2 |
| 41 | 8-5679 | Worm Shaft & Gear (Incl. Ref. #51) | 1 |
| 42 | 40-4755 | Decal - Gear Box | 1 |
| 43 | 8-0479 | Gear Case (Incl. Ref. #22, 23 & 25) | 1 |
| 44 | 11-9760 | Screw | 4 |
| 45 | 28-1550 | Screw - Nylon | 1 |

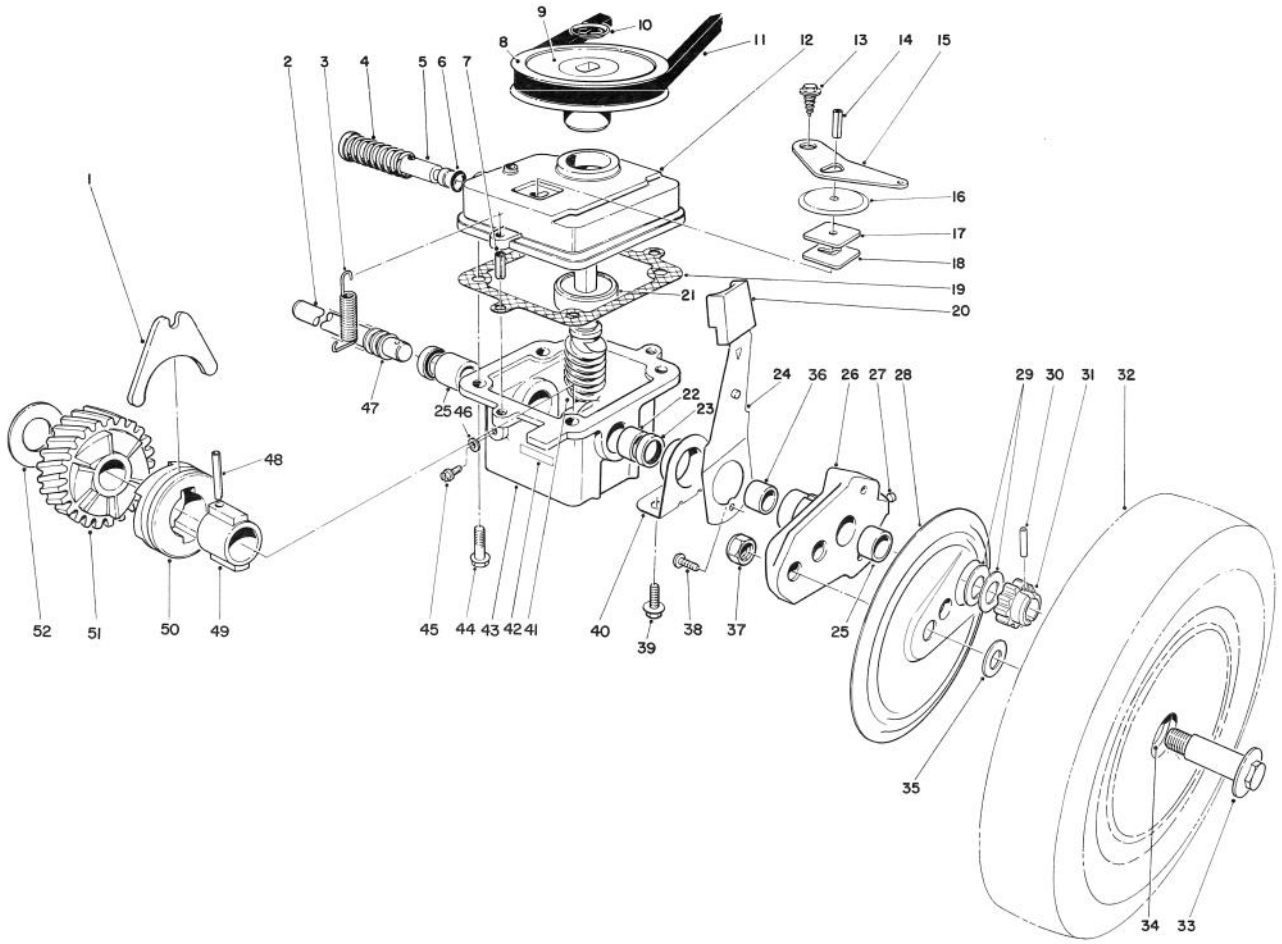


C-0188

# GEAR CASE ASSEMBLY (Continued)

| Ref. No. | Part No. | Description | No. Used |
|---|---|---|---|
| 46 | 46-9640 | Gasket | 1 |
| 47 | 24-7920 | Cover - Drive Shaft | 1 |
| 48 | 32121-88 | Pin - Coil | 1 |
| 49 | 3-0721 | Sleeve | 1 |
| 50 | 19-5660 | Jaw - Clutch | 1 |
| 51 | | Gear - Helical | 1 |

| Ref. No. | Part No. | Description | No. Used |
|---|---|---|---|
| 52 | 3-0724 | Washer - Thrust | 1 |
| * | 13-3479 | Gear Case Assembly (Complete) | 1 |
| * | 27-0490 | Bearing & Shaft Tool | 1 |
| *† | 39-9640 | Metric Bearing Tool | 1 |
| * | 27-0460 | Tool - Bushing | 1 |

*Not Illustrated
†Use with 27-0490 Bearing & Shaft Tool

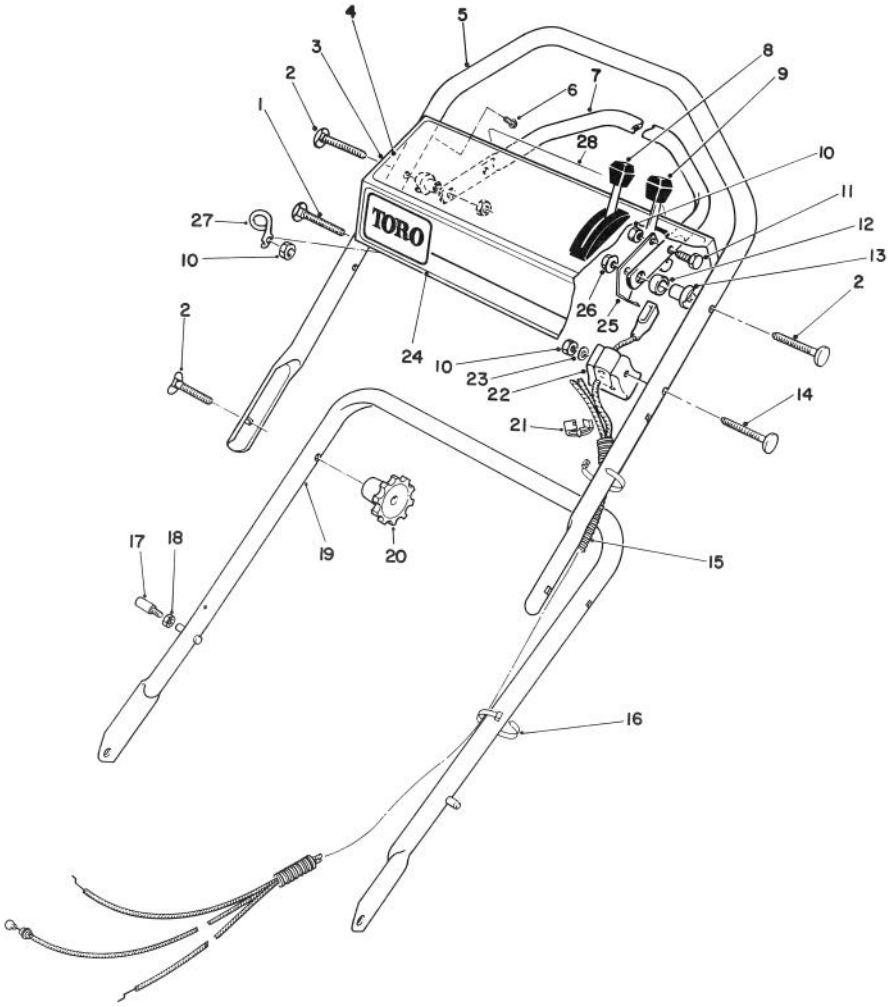


C-0183

# HANDLE ASSEMBLY

| Ref. No. | Part No. | Description | No. Used |
|---|---|---|---|
| 1 | 46-6433 | Screw - Handle | 1 |
| 2 | 17-9421 | Screw - Handle | 4 |
| 3 | 13-3469 | Panel - Control (Incl. Ref. #4 & 29) | 1 |
| 4 | 66-1840 | Decal - Instructions | 1 |
| 5 | 84-8330 | Handle - Upper | 1 |
| 6 | 32104 -76 | Screw - Self Tapping | 5 |
| 7 | 52-7430 | Control Bar Assembly | 1 |
| 8 | 46-6884 | Control - Traction Bend Type 3 Sheath Lg. 53"(134.6 cm) Wire Lg. 2 1/2"(6.4 cm) | 1 |
| 9 | 49-4197 | Control - Throttle/Choke Bend Type 2 Sheath Lg. 41"(104.1 cm) Wire Lg. 2 1/4"(5.7 cm) | 1 |
| 10 | 3296-42 | Locknut | 3 |
| 11 | 321-3 | Screw - Cap, Hex Hd. | 1 |
| 12 | 256-276 | Spacer - Nylon | 1 |
| 13 | 49-1630 | Support - Spacer | 2 |
| 14 | 46-6434 | Screw - Handle | 1 |
| 15 | 46-6441 | Cover - Control Cable | 1 |
| 16 | 3290-378 | Cable Tie | 2 |
| 17‡ | 49-2750 | Pin - Handle | 2 |
| 18‡ | 3296-47 | Locknut | 2 |
| 19 | 49-1690 | Handle - Lower | 1 |
| 20 | 19-4050 | Knob - Handle | 2 |
| 21 | 2412-50 | Clip - Convoluted Tubing | 4 |
| 22 | 46-6980 | Support - Cable | 1 |
| 23 | 3256-22 | Washer - Flat | 1 |
| 24 | 66-1770 | Decal - Toro | 1 |
| 25 | 66-5350 | Lever - Control | 1 |
| 26 | 3296-58 | Locknut | 2 |
| 27 | 46-8080 | Guide - Rope | 1 |
| 28 | 66-1790 | Decal - Danger | 1 |

‡Service Replacement Parts

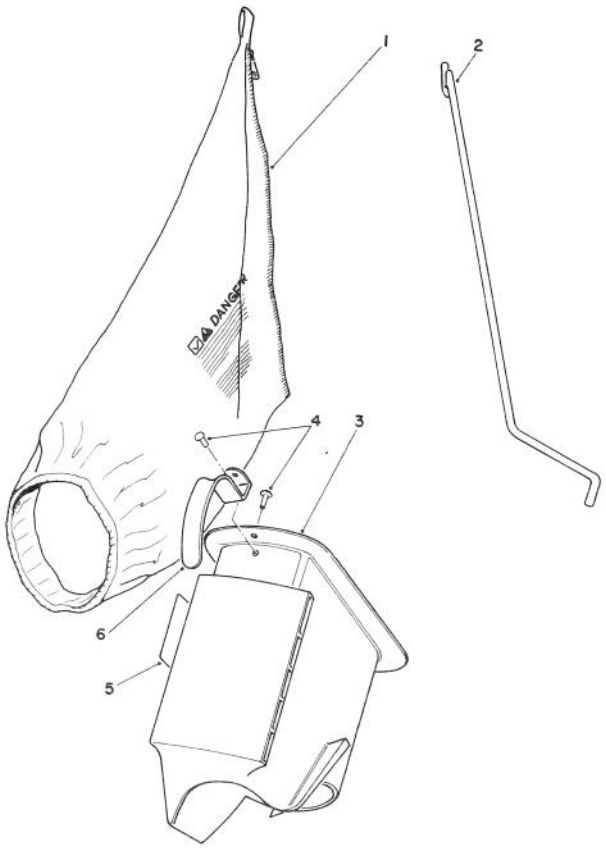


C-0187

# BAGGING KIT NO. 47-6510 (Optional)

| Ref. No. | Part No. | Description | No. Used |
|---|---|---|---|
| 1 | 6-0929 | Grass Bag | 1 |
| 2 | 47-5830 | Bag Rod | 1 |
| 3 | 6-1089 | Grass Chute (Incl. Ref. #4 & 6) | 1 |

| Ref. No. | Part No. | Description | No. Used |
|---|---|---|---|
| 4 | 3295-26 | Rivet | 2 |
| 5 | 36-5230 | Decal - Bag Chute | 1 |
| 6 | 20-4650 | Handle Chute | 1 |

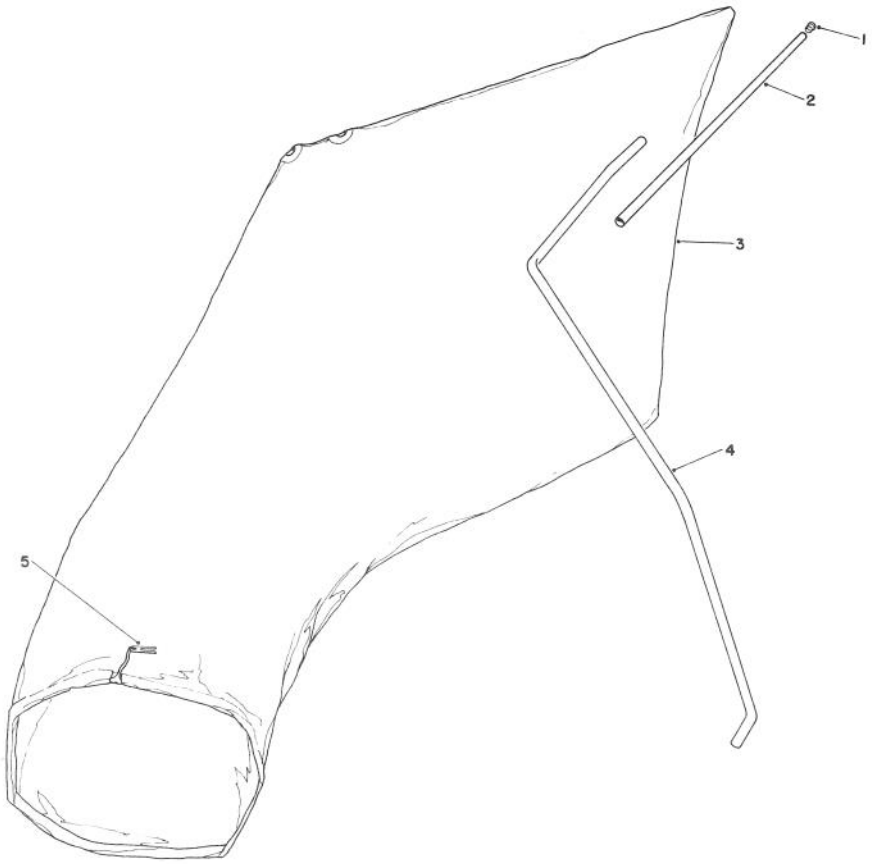


C-0186

# GIANT BAGGING KIT NO. 29-9750 (Optional)

| Ref. No. | Part No. | Description | No. Used |
|---|---|---|---|
| 1 | 2410-29 | Cap | 1 |
| 2 | 29-7000 | Tube 25" | 1 |
| 3 | 8-4719 | Bag (Incl. Ref. #5) | 1 |

| Ref. No. | Part No. | Description | No. Used |
|---|---|---|---|
| 4 | 22-4820 | Hanger Rod | 1 |
| 5 | 3-2781 | Bag Cord Fasteners | 1 |

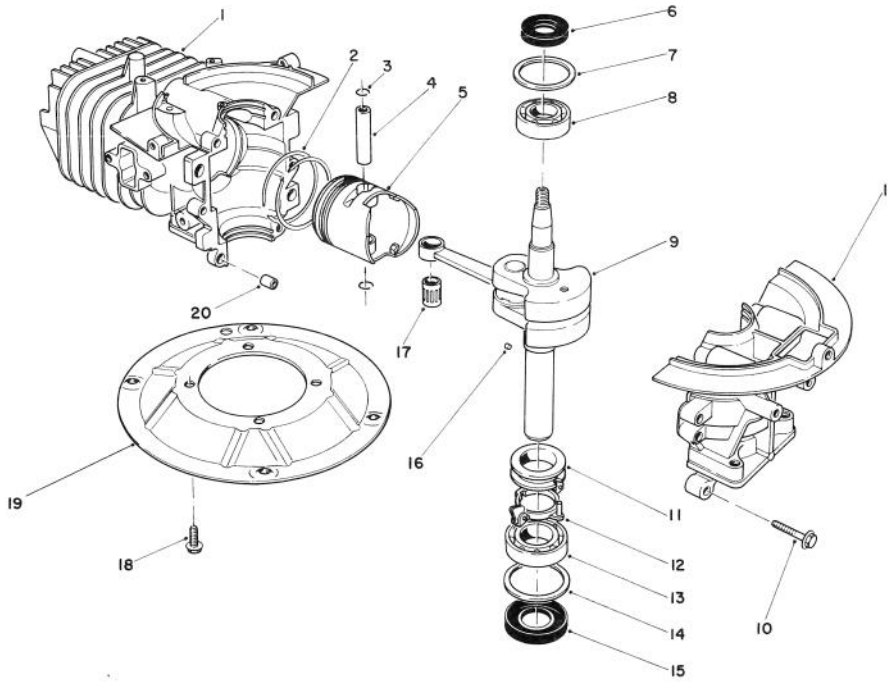


C-0190

# CRANK SHAFT ASSEMBLY
# (Model No. 47PM1-1)

| Ref. No. | Part No. | Description | No. Used |
|---|---|---|---|
| 1 | 81-2800 | Crankcase/Cylinder Ass'y | 1 |
| 2 | 81-0590 | Ring Set | 1 |
| 3 | 81-0620 | Circlip | 2 |
| 4 | 81-0600 | Pin - Wrist | 1 |
| 5 | 81-0580 | Piston (58mm) | 1 |
| 6 | 81-0720 | Oil Seal - Upper | 1 |
| 7 | 81-0710 | Thrust Washer - Upper | 1 |
| 8 | 81-0690 | Bearing - Upper (20mm) | 1 |
| 9 | 81-4600 | Crankshaft/Connecting Rod Assembly | 1 |
| 10 | 81-0540 | Bolt (30mm Lg.) | 6 |

| Ref. No. | Part No. | Description | No. Used |
|---|---|---|---|
| 11 | 81-0770 | Spacer - Governor | 1 |
| 12 | 81-0750 | Bracket - Governor Arm | 1 |
| 13 | 81-0700 | Bearing - Lower (25mm) | 1 |
| 14 | 81-0730 | Thrust Washer - Lower | 1 |
| 15 | 81-0740 | Oil Seal - Lower | 1 |
| 16 | 81-0760 | Pin - Crankshaft | 1 |
| 17 | 81-0610 | Bearing - Wrist Pin | 1 |
| 18 | 81-0570 | Bolt (20mm Lg.) | 4 |
| 19 | 81-0560 | Plate - Mounting | 1 |
| 20 | 81-0520 | Pin - Crankcase | 2 |
| * | 12-7699 | Short Block Assembly | 1 |

*Not Illustrated

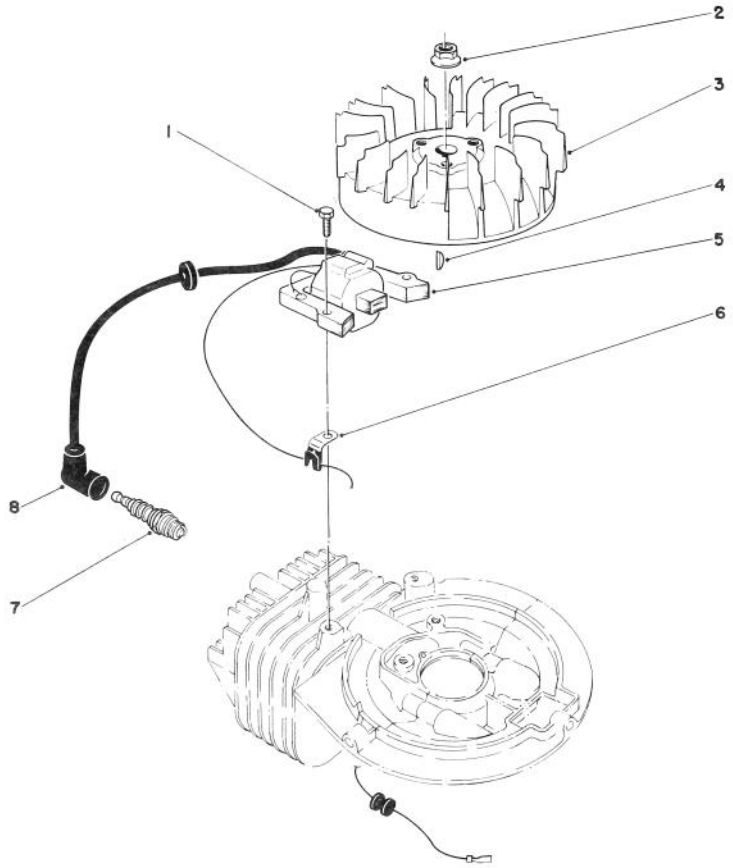


C-0176

# IGNITION ASSEMBLY (Model No. 47PM1-1)

| Ref. No. | Part No. | Description | No. Used |
|---|---|---|---|
| 1 | 81-5680 | Capscrew - Hex Hd. | 2 |
| 2 | 81-1330 | Nut | 1 |
| 3 | 81-2810 | Flywheel - Magneto | 1 |
| 4 | 81-2370 | Key - Flywheel | 1 |
| 5 | 81-2820 | Coil/Ignition Assembly | 1 |
| 6 | 81-1480 | Clamp | 1 |
| 7 | 81-0181 | Spark Plug | 1 |
| 8 | 81-1500 | Cover - Spark Plug | 1 |
| * | 41-7650 | Puller - Flywheel | 1 |

*Not Illustrated

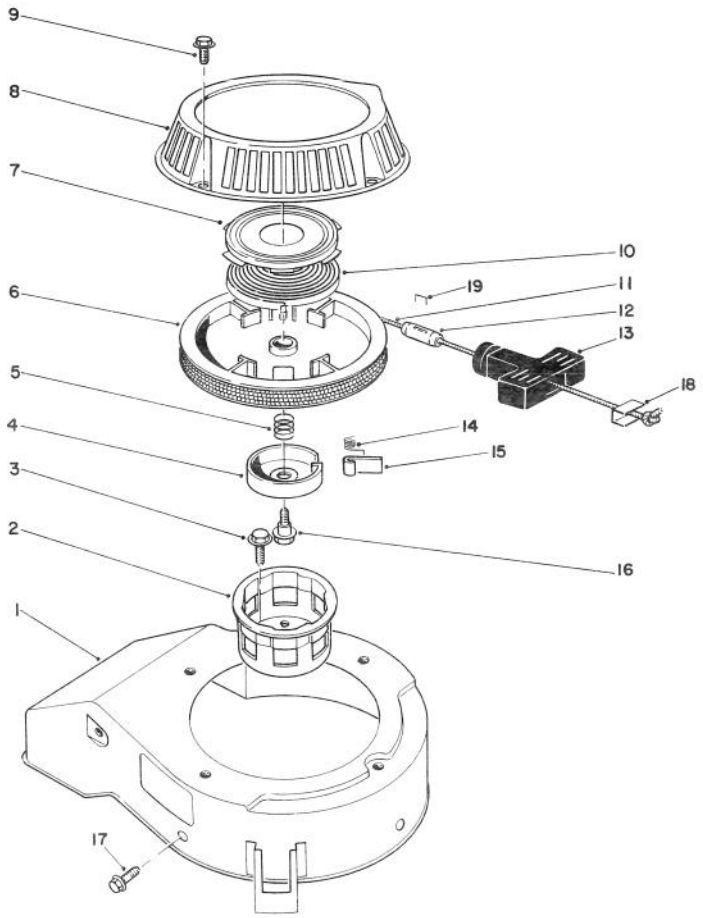


C-0178

# RECOIL ASSEMBLY
# (Model No. 47PM1-1)

| Ref. No. | Part No. | Description | No. Used |
|---|---|---|---|
| 1 | 81-2070 | Cover - Cooling Fan | 1 |
| 2 | 81-1290 | Pulley - Starter Cup | 1 |
| 3 | 81-1300 | Bolt (16mm Lg.) | 3 |
| 4 | 81-1250 | Retainer - Dog | 1 |
| 5 | 81-1240 | Spring - Compression | 1 |
| 6 | 81-1210 | Reel - Rope Pulley | 1 |
| 7 | | Retainer Cup - Recoil Spring | 1 |
| 8 | 81-2090 | Case - Recoil | 1 |
| 9 | 81-1280 | Bolt | 4 |
| 10 | | Spring - Recoil | 1 |
| 11 | 81-1270 | Rope | 1 |
| 12 | 81-3980 | Stop - Recoil | 1 |

| Ref. No. | Part No. | Description | No. Used |
|---|---|---|---|
| 13 | 81-1630 | Handle - Recoil | 1 |
| 14 | 81-1220 | Spring - Dog | 1 |
| 15 | 81-1230 | Dog | 1 |
| 16 | 81-1260 | Bolt - Shoulder | 1 |
| 17 | 81-1170 | Bolt - Self Tapping (15mm Lg.) | 3 |
| †18 | | Staple | 1 |
| * | 81-2040 | Starter Assembly (Incl. Ref. #4-16) | 1 |
| * | 81-2300 | Spring & Retainer (Incl. Ref. #6 & 9) | 1 |

*Not Illustrated
†Obtain Locally

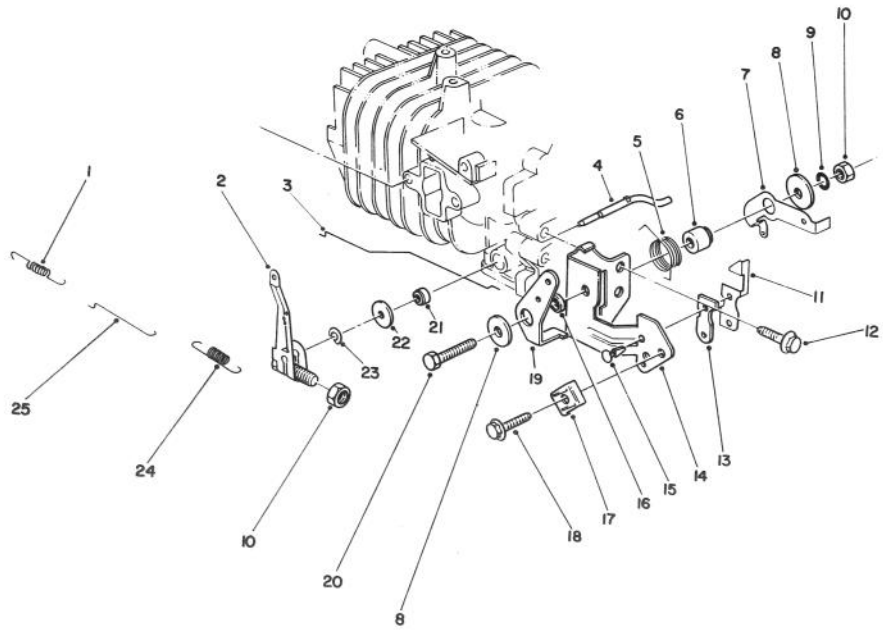


C-0192

# GOVERNOR ASSEMBLY
# (Model No. 47PM1-1)

| Ref. No. | Part No. | Description | No. Used |
|---|---|---|---|
| 1 | 81-0920 | Spring - Carburetor Rod | 1 |
| 2 | 81-5420 | Governor Arm/Bolt Ass'y | 1 |
| 3 | 81-5410 | Rod - Choke | 1 |
| 4 | 81-2880 | Shaft - Governor | 1 |
| 5 | 81-2460 | Spring - Choke Control Lever | 1 |
| 6 | 81-1770 | Spacer - Governor Spring Lever | 1 |
| 7 | 81-2850 | Lever - Governor Spring | 1 |
| 8 | 81-1750 | Washer - Choke Control Lever | 2 |
| 9 | 81-1450 | Washer - Lock | 1 |
| 10 | 81-0900 | Nut | 2 |
| 11 | 81-1840 | Terminal - Kill Switch | 1 |
| 12 | 81-1170 | Bolt - Self Tapping (15mm Lg.) | 1 |

| Ref. No. | Part No. | Description | No. Used |
|---|---|---|---|
| 13 | 81-1830 | Insulator - Kill Switch | 1 |
| 14 | 81-2420 | Bracket - Throttle Control | 1 |
| 15 | 81-1850 | Rivet - Kill Switch | 2 |
| 16 | 81-2470 | Spacer - Choke Control Lever | 1 |
| 17 | 81-2430 | Clamp - Cable | 1 |
| 18 | 50-0130 | Bolt - Cable Clamp | 1 |
| 19 | 81-1710 | Lever - Choke Control | 1 |
| 20 | 81-1730 | Bolt - Throttle Control Brkt. | 1 |
| 21 | 81-0850 | Oil Seal - Governor Shaft | 1 |
| 22 | 81-0860 | Washer | 1 |
| 23 | 81-0870 | E-Ring | 1 |
| 24 | 81-2830 | Spring - Governor | 1 |
| 25 | 81-0910 | Rod - Carburetor | 1 |

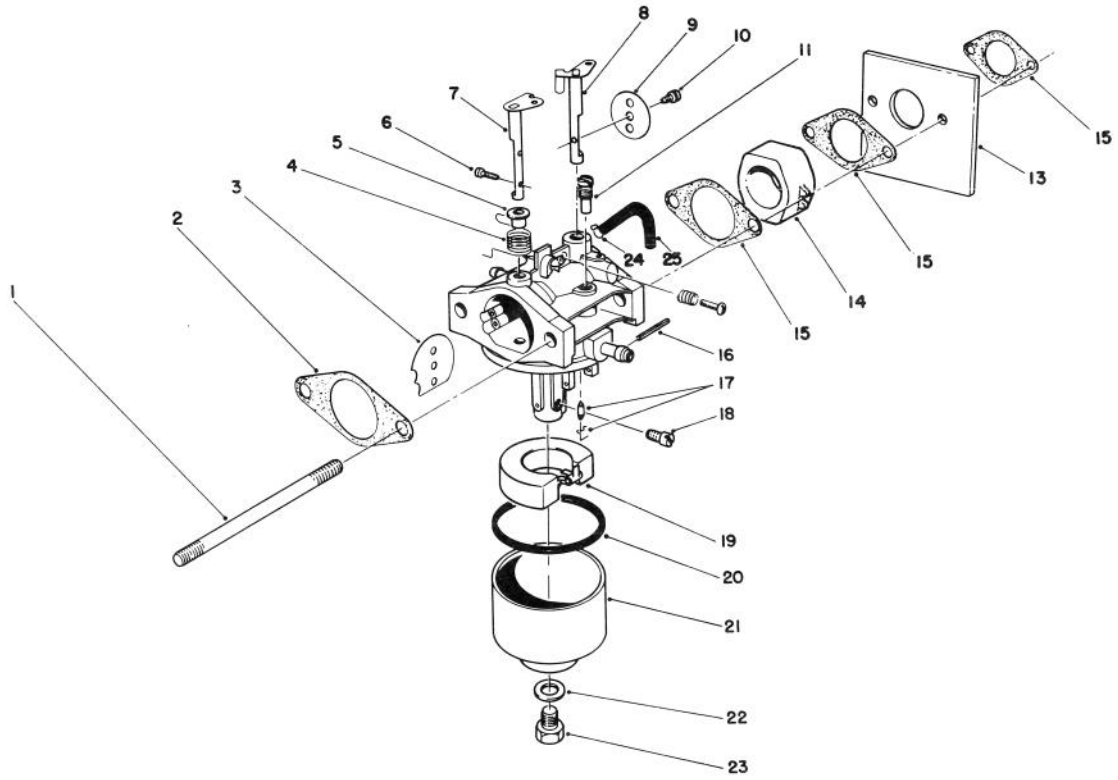


C-0191

# CARBURETOR ASSEMBLY (Model No. 47PM1-1)

| Ref. No. | Part No. | Description | No. Used |
|---|---|---|---|
| 1 | 81-5450 | Stud Bolt - Carburetor | 2 |
| 2 | 81-0090 | Gasket | 2 |
| 3 | 81-0240 | Valve - Choke | 1 |
| 4 | 81-0230 | Spring - Choke | 1 |
| 5 | 81-0220 | Bushing - Choke Valve | 1 |
| 6 | 81-2160 | Screw | 2 |
| 7 | 81-1950 | Shaft - Choke | 1 |
| 8 | 81-0250 | Shaft - Throttle | 1 |
| 9 | 81-0260 | Valve - Throttle | 1 |
| 10 | 81-0270 | Screw - Throttle Valve | 1 |
| 11 | 81-1030 | Jet - Pilot (#40) | 1 |
| 13 | 81-5490 | Shield - Carburetor | 1 |
| 14 | 81-5440 | Insulator - Carburetor | 1 |
| 15 | 81-0780 | Gasket | 1 |
| 16 | 81-5600 | Pin | 1 |
| 17 | 81-4910 | Needle Valve/Spring Wire | 1 |
| 18 | 81-1060 | Jet - Main (#75) | 1 |

| Ref. No. | Part No. | Description | No. Used |
|---|---|---|---|
| * | 81-2340 | Jet - Main (#72.5) High Alt., Above 6000 (Optional) | 1 |
| 19 | 81-0970 | Float | 1 |
| 20 | 81-1010 | Gasket - Float Bowl | 1 |
| 21 | 81-5660 | Bowl - Float | 1 |
| 22 | 81-1020 | Gasket - Bowl Screw | 1 |
| 23 | 81-5670 | Screw - Bowl | 1 |
| 24 | 81-5460 | Clamp - Vent Tube | 1 |
| 25 | 81-5470 | Tube - Vent | 1 |
| 26 | 81-2320 | Gasket | 2 |
| * | 12-6379 | Carburetor Kit (Incl. Ref. #2, 15, 17, 20, & 22) | 1 |
| * | 81-5430 | Carburetor Assembly - Complete | 1 |
| * | 81-5810 | Needle & Seat Kit (Incl. Valve Seat & Ref. #17) | 1 |

*Not Illustrated

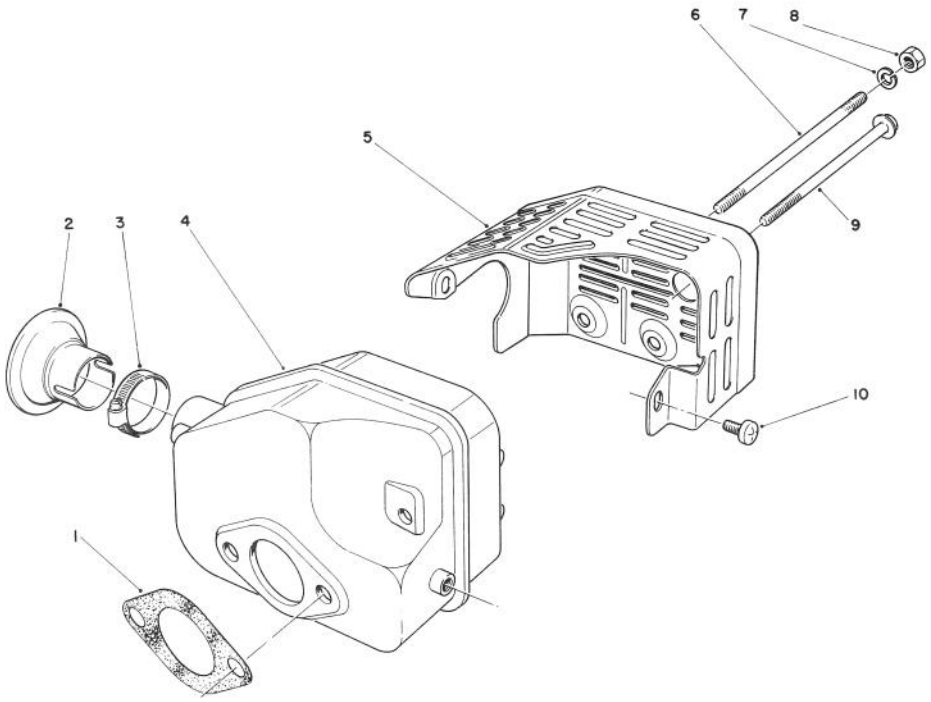


T-0667

# MUFFLER ASSEMBLY (Model No. 47PM1-1)

| Ref. No. | Part No. | Description | No. Used |
|---|---|---|---|
| 1 | 81-1080 | Gasket - Muffler | 1 |
| *2 | 81-0200 | Spark Arrester | 1 |
| †3 | | Clamp | 1 |
| 4 | 81-5690 | Muffler | 1 |
| 5 | 81-2450 | Cover - Muffler | 1 |

| Ref. No. | Part No. | Description | No. Used |
|---|---|---|---|
| 6 | 81-1100 | Bolt | 2 |
| 7 | 81-1120 | Washer - Lock | 2 |
| 8 | 81-1110 | Nut | 2 |
| 9 | 81-1150 | Bolt - Self Tapping | 1 |
| 10 | 81-1140 | Screw - Phillips Hd. | 2 |

*Optional Equipment
†Obtain Locally

## PRODUCT CHANGES

In an effort to make improvements available to TORO owners as quickly as possible, minor changes are incorporated into Toro's products from time to time that do not become immediately shown in the Parts Catalog. If such a change has been made in your unit, which is not reflected in your manual, see your TORO Distributor or his Authorized TORO Service Dealer for information and part numbers.

## COUNTRIES OTHER THAN THE UNITED STATES OR CANADA

Customers who have purchased TORO products exported from the United States or Canada should contact their Toro Distributor (Dealer) to obtain guarantee policies for your country, province or state. If for any reason you are dissatisfied with your Distributor's service or have difficulty obtaining guarantee information, contact the TORO importer. If all other remedies fail, you may contact us at The Toro Company.

# MAINTENANCE RECORD

| Date | | | | | | | | |
|---|---|---|---|---|---|---|---|---|
| | | | | | | | | |
| | | | | | | | | |
| | | | | | | | | |
| | | | | | | | | |
| | | | | | | | | |
| | | | | | | | | |
| | | | | | | | | |
| | | | | | | | | |
| | | | | | | | | |
| | | | | | | | | |
| | | | | | | | | |
| | | | | | | | | |
| | | | | | | | | |
| | | | | | | | | |
| | | | | | | | | |
| | | | | | | | | |
| | | | | | | | | |
| | | | | | | | | |
| | | | | | | | | |
| | | | | | | | | |
| | | | | | | | | |

Compliance with Radio Interference Regulations Certified.
Certifie Conforme au Reglement sur le Brouillage Radioélectrique.



Litho in U.S.A.