FORM NO. 3314-995

TORO®

MODEL NO. 20901B-2000001 & UP
MODEL NO. 20906B-2000001 & UP

PARTS CATALOG

48cm REAR BAGGING MOWER

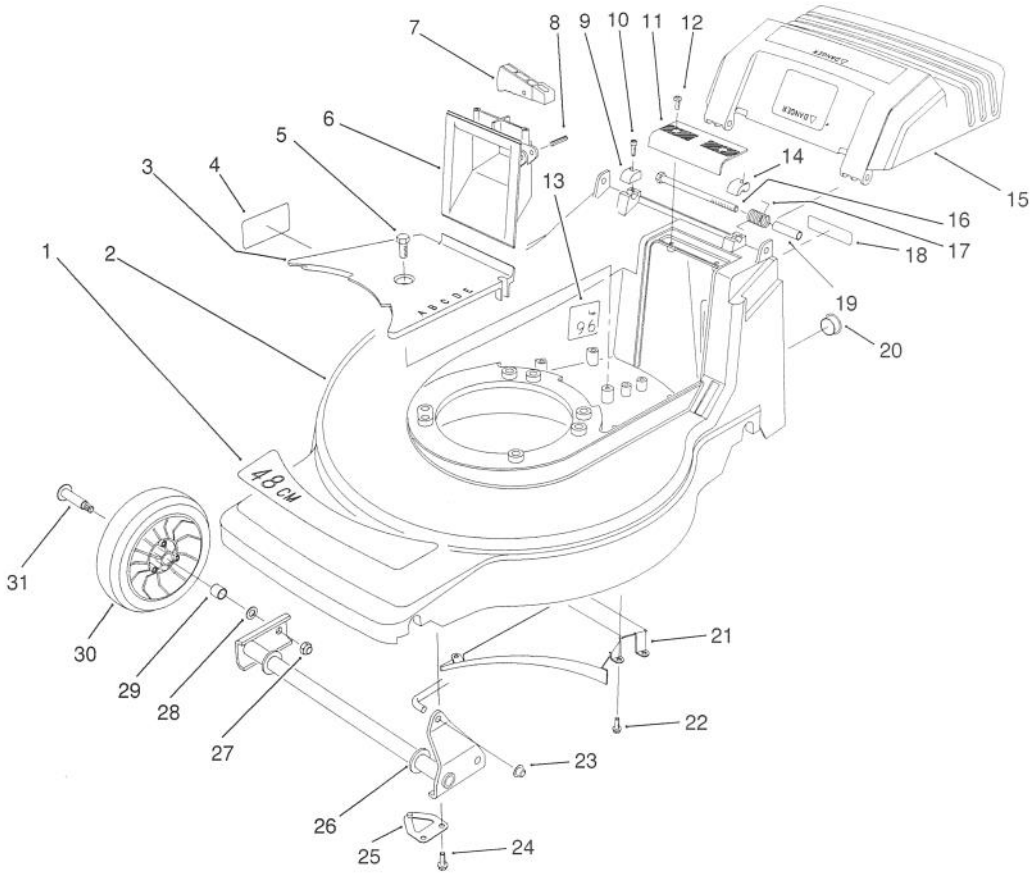

C-0635

HOUSING ASSEMBLY (Model No. 20901B)

Ref. No.	Part No.	Description	No. Used
1	71-8290	Decal - 48cm	1
2	14-0049	Housing - 48cm (Incl. Ref. #1, 4, & 13)	1
3	71-7920	Cover - Belt	1
4	62-3860	Decal - Danger	1
5	32144-70	Screw - Hex. Flange Hd.	1
6	71-7870	Grip - Lower	1
7	71-7930	Trigger - H.O.C.	1
8	3284-5	Pin - Roll	1
9	71-7910	Cap - Hinge Bolt R.H.	1
10	65-5210	Screw - Thread Forming	2
11	71-7860	Grip - Upper	1
12	32144-97	Screw - Thread Forming	2
13	66-1700	Decal - Noise Rating	1
14	71-7900	Cap - Hinge Bolt L.H.	1
15	71-8241	Door Discharge	1
16	322-29	Screw - Cap Hex. Hd.	2
17	71-8300	Spring - Door	2
18	66-0680	Decal - French Regulation	1
19	71-8580	Spacer - Door	2
20	2410-74	Plug - Hole	1
21	71-7990	Ramp - Discharge	1
22	49-2040	Screw - Thread Forming	4
23	32112-11	Nut - Push	1
24	11-9760	Screw - Thr'd Forming	4
25	71-7760	Plate - Suspension Front	2
26	71-7820	Pivot - Front	1
27	3296-5	Nut - Lock	2
28	40-1940	Washer - Wheel	2
29	27-6250	Bushing - Wheel	4
30	46-1113	Wheel & Tire Assembly (Incl. Ref. #29)	2
31	27-6230	Bolt - Wheel	2

© The TORO Company - 1991

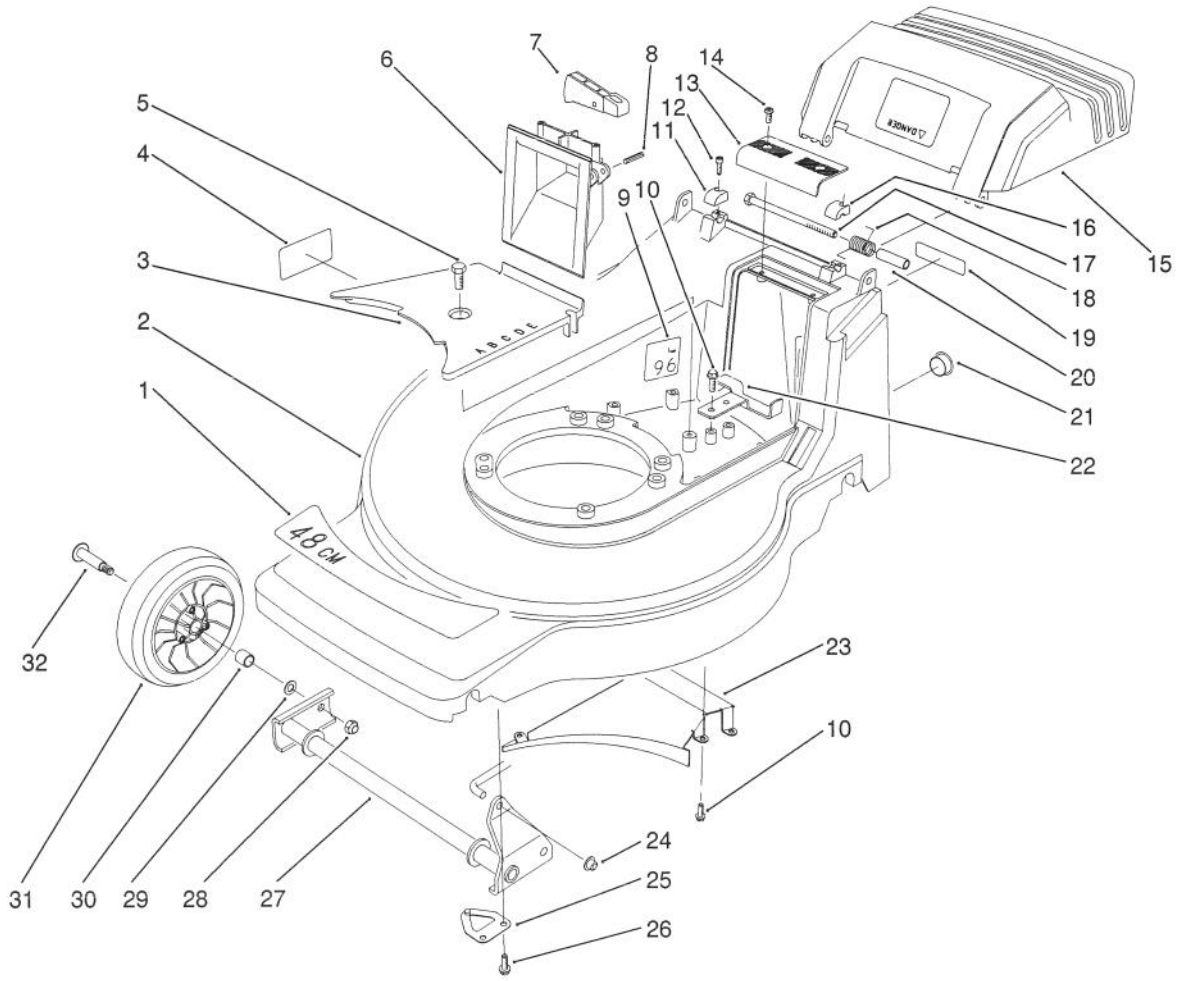

C-0633

HOUSING ASSEMBLY (MODEL NO. 20906B)

Ref. No.	Part No.	Description	No. Used
1	71-8290	Decal - 48cm	1
2	14-0049	Housing - 48cm	1
3	71-7920	Cover - Belt	1
4	62-3860	Decal - Danger	1
5	32144-70	Screw - Hex. Flange Hd.	1
6	71-7870	Grip - Lower	1
7	71-7930	Trigger - H.O.C.	1
8	3284-5	Pin - Roll	1
9	66-1700	Decal - Noise Rating	1
10	49-2040	Screw - Thread Forming	6
11	71-7910	Cap - Hinge Bolt R.H.	1
12	65-5210	Screw - Thread Forming	2
13	71-7860	Grip - Upper	1
14	32144-97	Screw - Thread Forming	2
15	71-8240	Door - Discharge	1
16	71-7900	Cap - Hinge Bolt L.H.	1
17	322-29	Screw - Cap Hex. Hd.	2

Ref. No.	Part No.	Description	No. Used
18	71-8300	Spring - Door	2
19	66-0680	Decal - French Regulation	1
20	71-8580	Spacer - Door	2
21	2410-74	Plug - Hole	1
22	71-7890	Guide - Belt Rear	1
23	71-7990	Ramp - Discharge	1
24	32112-11	Nut - Push	1
25	71-8830	Retainer - Shaft	2
26	11-9760	Screw - Thr'd Forming	4
27	71-7820	Pivot - Front	1
28	3296-5	Nut - Lock	2
29	40-1940	Washer - Wheel	2
30	27-6250	Bushing - Wheel	4
31	46-1113	Wheel & Tire Assembly (Incl. Ref. #30)	2
32	27-6230	Bolt - Wheel	2

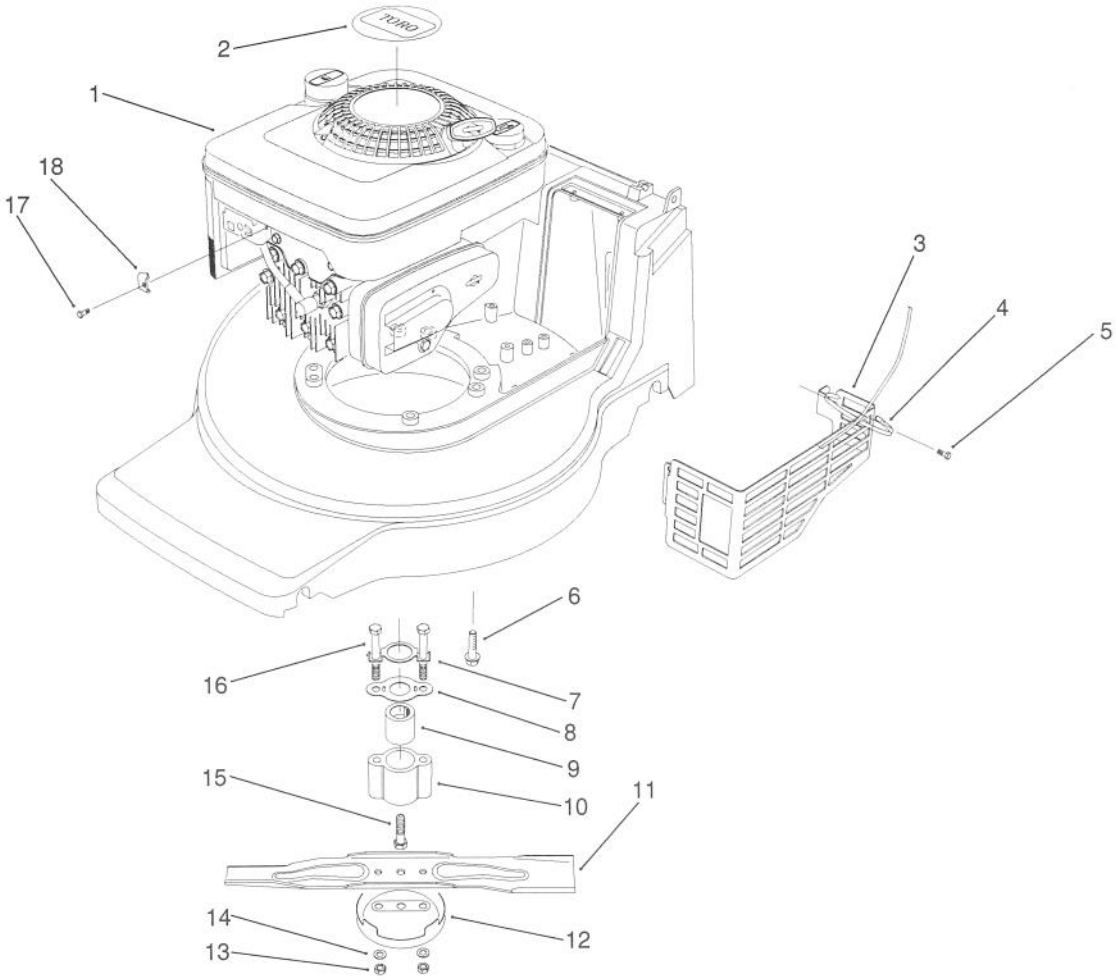

C-0636

ENGINE ASSEMBLY (Model No. 20901B)

Ref. No.	Part No.	Description	No. Used
1		Engine – B&S Quantum	1
2	71-8460	Decal – Engine	1
3	82-8550	Guard – Muffler	1
4	3290-378	Tie – Cable	1
5	32144-73	Screw – Muffler	3
6	11-0581	Bolt – Engine	3
7	71-9220	Retainer – Bracket	1
8	71-8840	Spring – Friction	2
9	71-8780	Hub – Crankshaft	1

Ref. No.	Part No.	Description	No. Used
10	71-8790	Retainer – Blade	1
11	71-8210	Blade – 48cm	1
12	42-0910	Cup – Anti-Scalp	1
13	52-3620	Nut – Lock	2
14	40-1940	Washer	2
15	71-8950	Screw – Crankshaft	1
16	71-8940	Screw – Blade	2
17	2210-313	Screw – Clamp	1
18	2210-249	Clamp – Cable	1

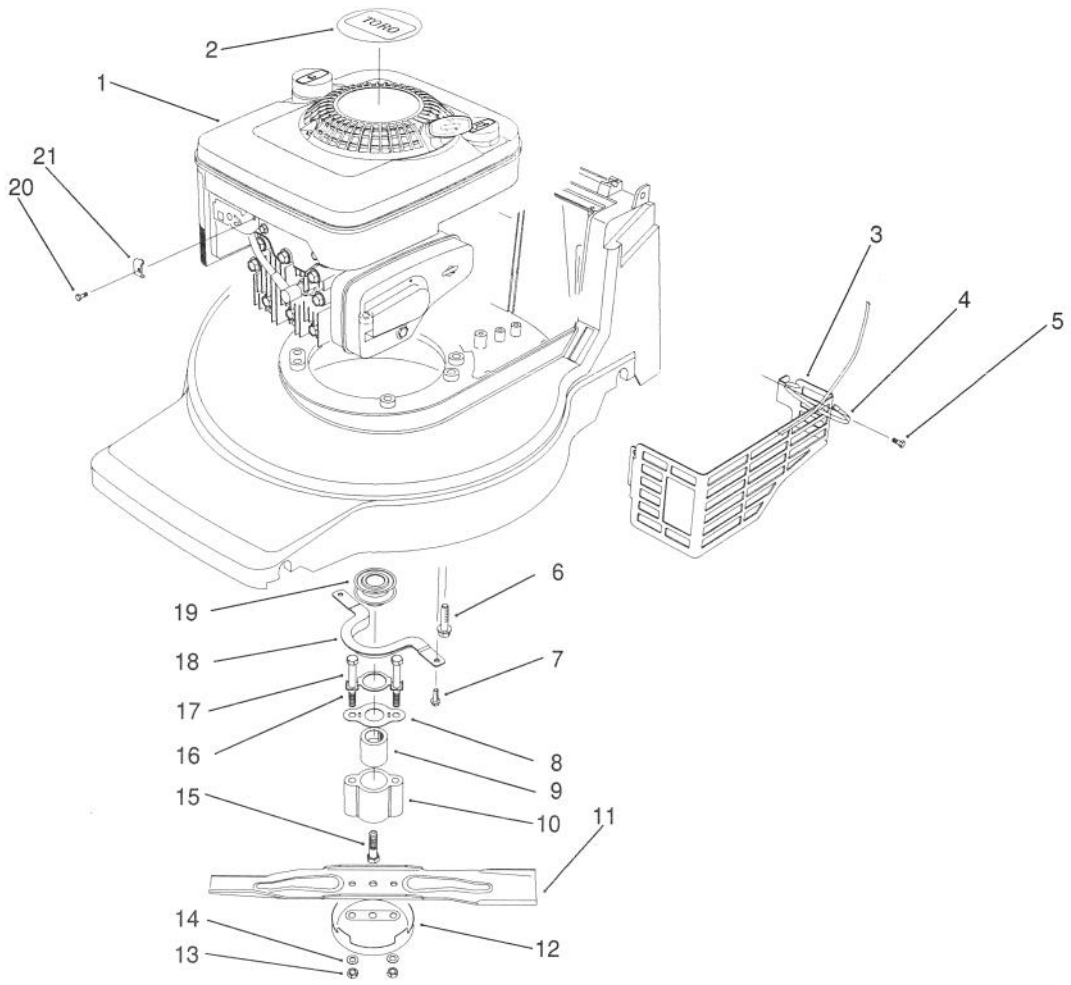

C-0637

ENGINE ASSEMBLY (Model No. 20906B)

Ref. No.	Part No.	Description	No. Used
1		Engine – B&S Quantum	1
2	71-8460	Decal – Engine	1
3	82-8550	Guard – Muffler	1
4	3290-378	Tie – Cable	1
5	32144-73	Screw – Muffler	3
6	11-0581	Bolt – Engine	3
7	32144-4	Screw – Thr'd Forming	2
8	71-8840	Spring – Friction	2
9	71-8780	Hub – Crankshaft	1
10	71-8790	Retainer – Blade	1
11	71-8210	Blade – 48cm	1

Ref. No.	Part No.	Description	No. Used
12	42-0910	Cup – Anti-Scalp	1
13	52-3620	Nut – Lock	2
14	40-1940	Washer	2
15	71-8950	Screw – Crankshaft	1
16	71-9220	Retainer – Bracket	1
17	71-8940	Screw – Blade	2
18	71-7960	Guide – Engine Belt	1
19	62-7550	Pulley – Driver	1
20	2210-313	Screw – Clamp	1
21	2210-249	Clamp – Cable	1

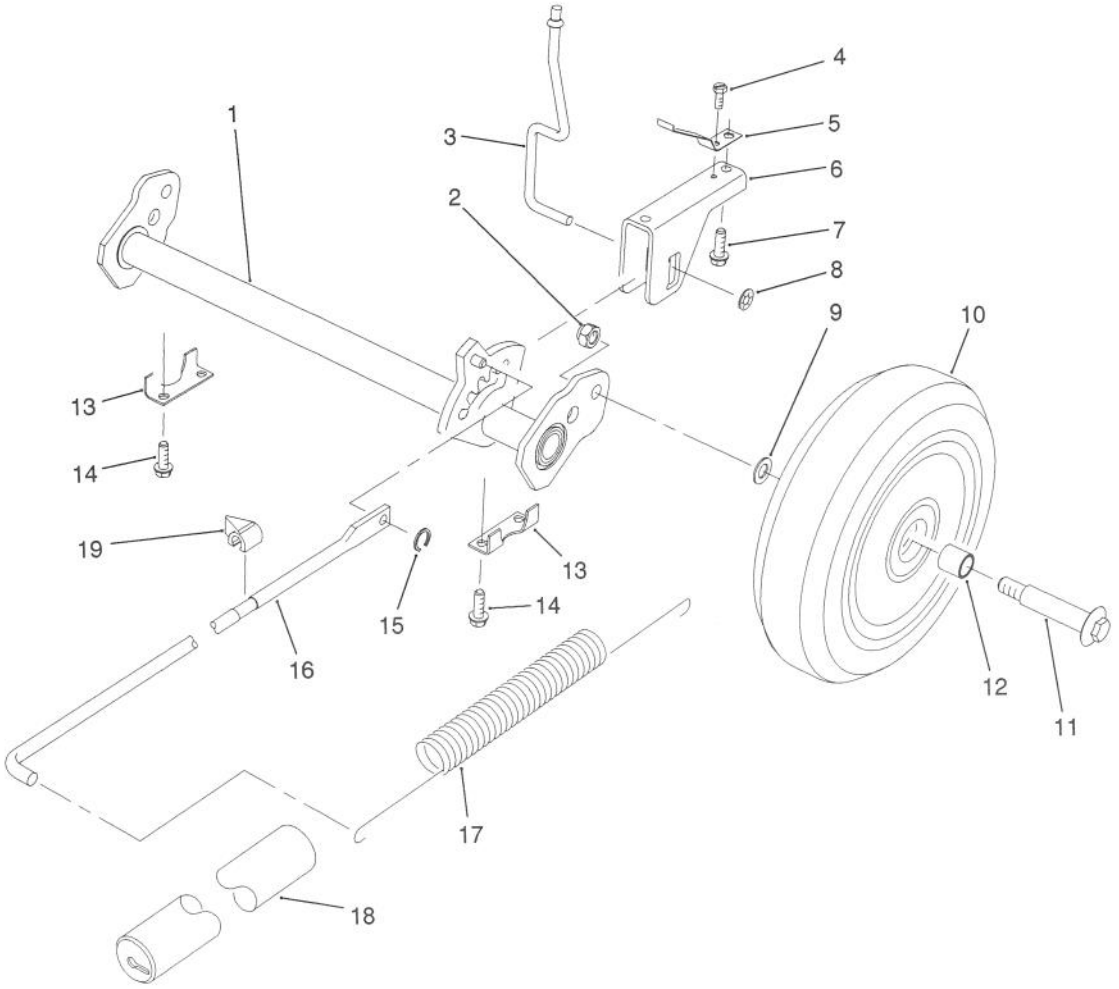

H. P. REAR AXLE ASSEMBLY (Model No. 20901B Only)

Ref. No.	Part No.	Description	No. Used
1	71-7800	Pivot - Rear H.P.	1
2	3296-5	Nut - Lock	2
3	71-7840	Rod - Trigger	1
4	32144-31	Screw - Thread Forming	1
5	71-8060	Spring - Trigger Return	2
6	71-8080	Saddle - H.O.C.	1
7	63-8590	Screw - Thread Forming	2
8	32112-13	Nut - Push	1
9	40-1940	Washer - Wheel	2
10	11-9509	Wheel & Tire Assembly (Incl. Ref. #12)	2

Ref. No.	Part No.	Description	No. Used
11	27-6230	Bolt - Wheel	2
12	27-6250	Bushing - Wheel	4
13	71-7770	Plate - Rear Suspension	2
14	49-2040	Screw - Thread Forming	4
15	32151-93	Ring - Grip	1
16	71-7970	Rod - Link	1
17	71-7740	Spring - Counterbalance	1
18	71-8450	Cover - Spring	1
19	71-7980	Indicator - H.O.C.	1

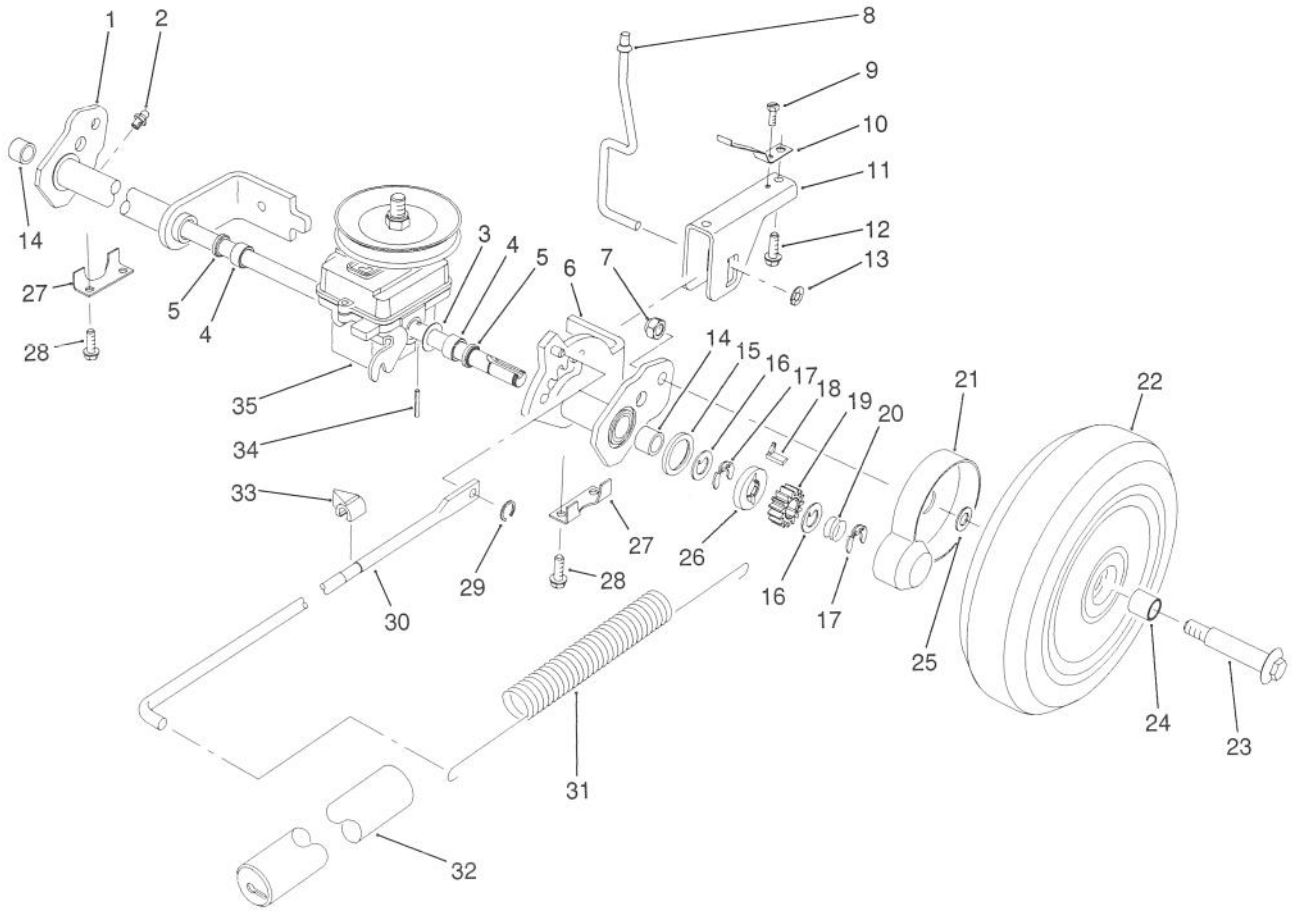

C-0364

S. P. REAR AXLE ASSEMBLY (Model No. 20906B Only)

Ref. No.	Part No.	Description	No. Used
1	71-8430	Rear Pivot Assembly R.H. (Incl. Ref. #2, 4, 5 & 14)	1
2	302-26	Fitting - Grease	2
3	36-4780	Washer	2
4	47-2890	Bushing - Sleeve	2
5	47-6730	Seal - Grease	2
6	71-8440	Rear Pivot Assembly L.H. (Incl. Ref. #2, 4, 5 & 14)	1
7	3296-5	Nut - Lock	2
8	71-7840	Rod - Trigger	1
9	32144-31	Screw - Thread Forming	1
10	71-8060	Spring - Trigger Return	2
11	71-8080	Saddle - H.O.C.	1
12	63-8590	Screw - Thread Forming	2
13	32112-13	Nut - Push	1
14	48-2060	Bearing - Needle	2
15	65-4710	Washer - Friction	2
16	65-4740	Washer - Keyed Thrust	4
17	65-2720	Ring - Retaining	4

Ref. No.	Part No.	Description	No. Used
18	66-6050	Key - Rocking L.H.	1
*	66-6040	Key - Rocking R.H.	1
19	65-4750	Gear - Pinion	2
20	65-4720	Spring - Compression	2
21	74-1660	Cover - Wheel	2
22	11-9519	Wheel, Tire & Gear Assy. (Incl. Ref. #24)	2
23	27-6230	Bolt - Wheel	2
24	27-6250	Bushing - Wheel	4
25	74-1670	Spacer - Wheel	2
26	65-4760	Washer - Clutch	2
27	71-7770	Plate - Rear Suspension	2
28	49-2040	Screw - Thread Forming	4
29	32151-93	Ring - Grip	1
30	71-7970	Rod - Link	1
31	71-7740	Spring - Counterbalance	1
32	71-8450	Cover - Spring	1
33	71-7980	Indicator - H.O.C.	1
34	32121-88	Pin - Roll	2
35	71-8250	Gearbox Assembly	1

*Not Illustrated

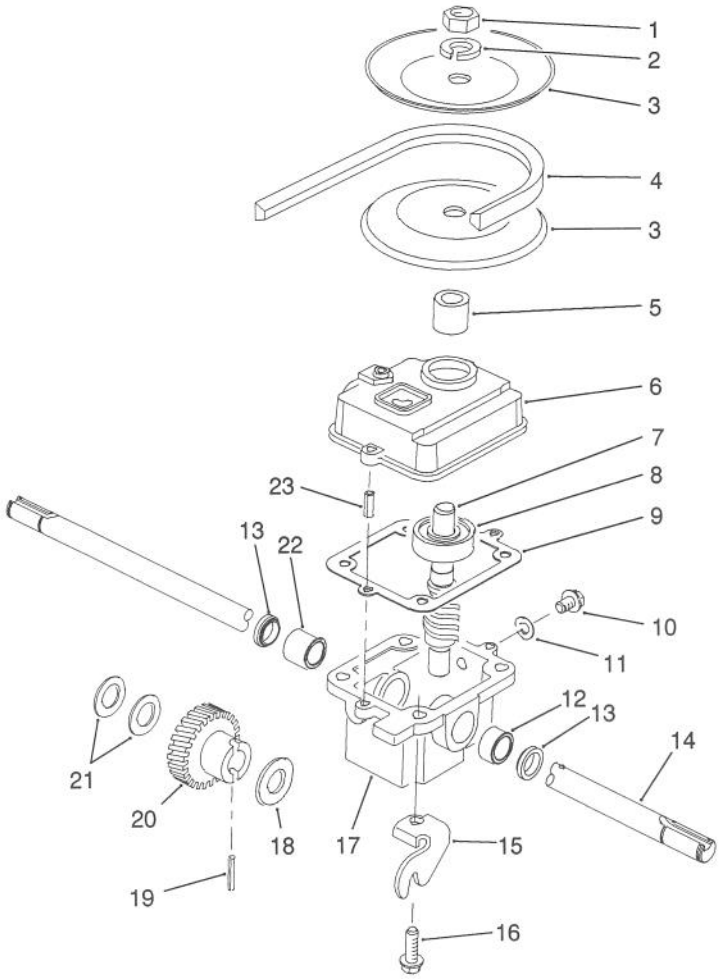

C-0365

GEARBOX ASSEMBLY NO. 71-8250

(Model No. 20906B Only)

Ref. No.	Part No.	Description	No. Used
1	3220-4	Nut - Jam	1
2	3253-6	Washer - Lock	1
3	71-7750	Pulley - Half	2
4	71-8500	Belt - V	1
5	71-7570	Spacer - Pulley	1
6	39-1103	Cover - Gearbox	1
7	71-8050	Shaft & Worm	1
8	47-7250	Bearing - Ball	1
9	36-1000	Gasket - Gearbox	1
10	28-1550	Screw - Drain	1
11	46-9640	Gasket - Drain Screw	1
12	47-2890	Bushing - Sleeve	1

Ref. No.	Part No.	Description	No. Used
13	47-6730	Seal - Oil	2
14	71-7880	Shaft - Output	1
15	71-8120	Bracket - Traction	1
16	49-2040	Screw - Thread Forming	4
17	33-2061	Case - Gearbox	1
18	3-0724	Washer - Thrust	1
19	32121-120	Pin - Roll	1
20	71-8140	Gear - Helical	1
21	36-4780	Washer - Thrust	2
22	47-2900	Bushing - Sleeve	1
23	32121-1	Pin - Roll	2

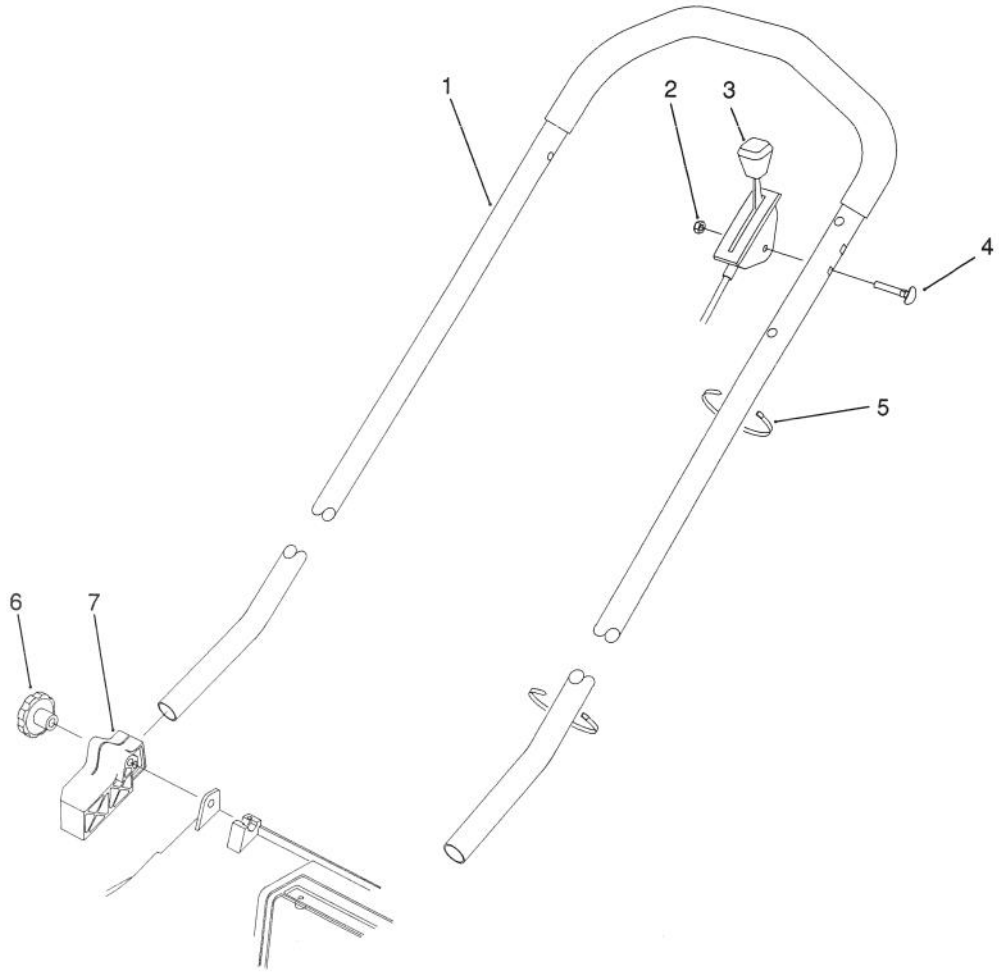

C-0366

H. P. HANDLE ASSEMBLY (Model No. 20901B Only)

Ref. No.	Part No.	Description	No. Used
1	71-9020	Handle	1
2	3296-56	Nut - Lock	1
3	71-8380	Control - Throttle Bend Type #1 Sheath Lg. 57.50 Wire Lg. 2 1/2	1

Ref. No.	Part No.	Description	No. Used
4	46-6430	Screw - Cap Hex. Hd.	1
5	3290-378	Tie - Cable	2
6	19-4050	Knob - Handle	2
7	71-8100	Mount - Handle R.H.	1
*	71-8090	Mount - Handle L.H.	1

*Not Illustrated

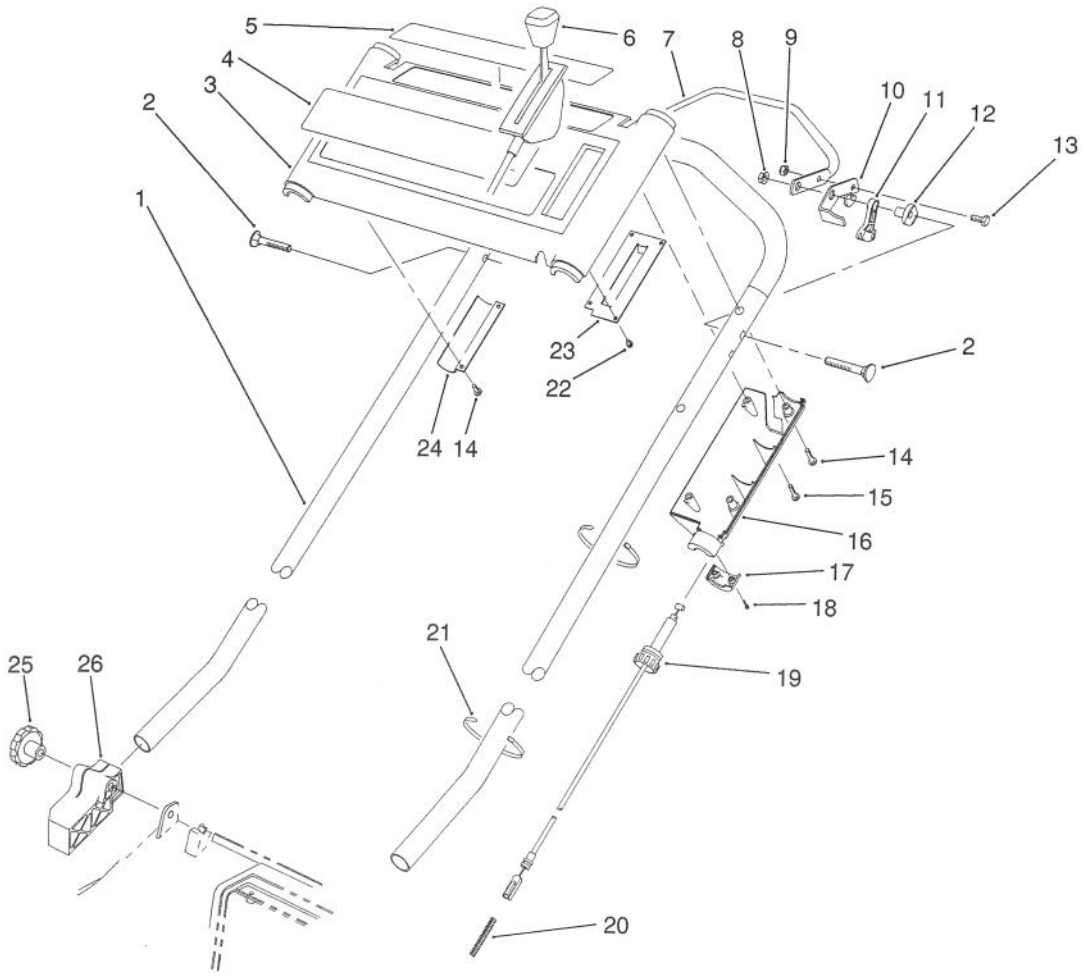

C-0367

S. P. HANDLE ASSEMBLY (Model No. 20906B Only)

Ref. No.	Part No.	Description	No. Used
1	71-9020	Handle	1
2	17-9426	Screw - Handle	2
3	14-0039	Panel - Control (Incl. Ref. #4 & 5)	1
4	71-8330	Decal - TORO Logo	1
5	71-8320	Decal - Danger	1
6	66-0235	Control - Throttle Bend Type #1 Sheath Lg. 55.50 Wire Lg. 2 1/2	1
7	46-9900	Bar - Control	1
8	3296-29	Nut - Flange Lock	2
9	3296-42	Nut - Lock	1
10	46-8800	Lever - Control	1
11	46-5520	Lever - Traction	1
12	66-0330	Support - Spacer	2

Ref. No.	Part No.	Description	No. Used
13	321-3	Screw - Cap Hex. Hd.	1
14	32144-97	Screw - Thread Forming	5
15	32104-121	Screw - Thread Forming	1
16	71-7680	Cover - Throttle Lower	1
17	71-7630	Cap - Throttle Lower	1
18	32144-99	Screw - Thread Forming	2
19	71-8110	Cable - Traction	1
20	71-8310	Spring - Gearbox Return	1
21	3290-378	Tie - Cable	2
22	32144-98	Screw - Thread Forming	4
23	71-8040	Plate - Throttle	1
24	71-8130	Bracket - Panel	1
25	19-4050	Knob - Handle	2
26	71-8100	Mount - Handle R.H.	1
*	71-8090	Mount - Handle L.H.	1

*Not Illustrated

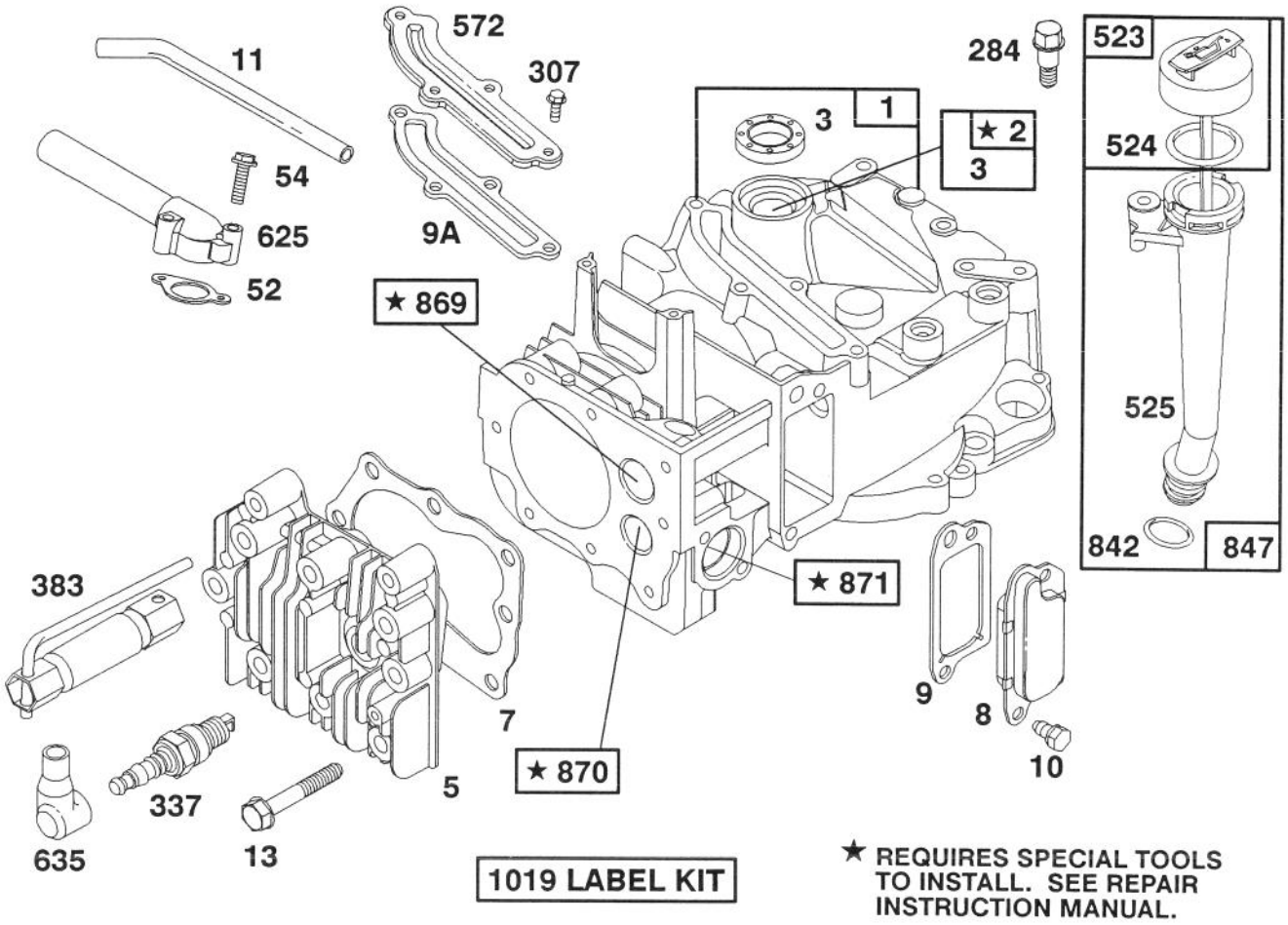

ENGINE BRIGGS & STRATTON MODEL 122702-0182-01

Ref. No.	Part No.	Description	No. Used
1	493260	Cylinder Assembly	2
2	93708	Bushing-Cylinder	1
		Note: Requires Special Tools for Instal lation.	1
★3	393862	Seal-Oil	1
5	213861	Head-Cylinder	1
★7	272200	Gasket-Cylinder Hd.	1
8	399717	Breather-Vlv. Chamber	1
★9	271904	Gasket-Valve Cover	1
★9A	272238	Gasket-Baffle Plate	1
10	94222	Screw-Breather Mtg.	1
11	231685	Tube-Breather	1
13	94547	Screw-Cylinder Hd.	1
★52	272199	Gasket-Intake Elbow	1
54	94526	Screw-Intake Elbow Mounting	1
284	94511	Screw-Hex. Head	1
307	94515	Screw-Hex. Head	1

Ref. No.	Part No.	Description	No. Used
337	802592	Plug-Spark	1
383	89838	Wrench-Spark Plug	1
523	493950	Cap with Dipstick-Oil Filler	1
524	280393	Seal-Filler Tube	1
525	493952	Tube-Oil Filler	1
572	224328	Baffle-Cylinder	1
625	492717	Tube-Fuel Intake	1
635	66538	Elbow-Spark Plug	1
842	280966	Seal-O-Ring	1
847	493459	Dipstick and Tube Assy.-Oil Filler	1
869	213512	Seat-Intake Valve (Standard)	1
870	213513	Seat-Exhaust Valve (Standard)	1
871	262001	Guide-Exhaust Valve	1
		Note: 63709 Guide-Intake Valve See Repair Instruction Manual.	1
1019	494256	Label Kit	1

★ Included in Gasket Set-Part No. 493263.

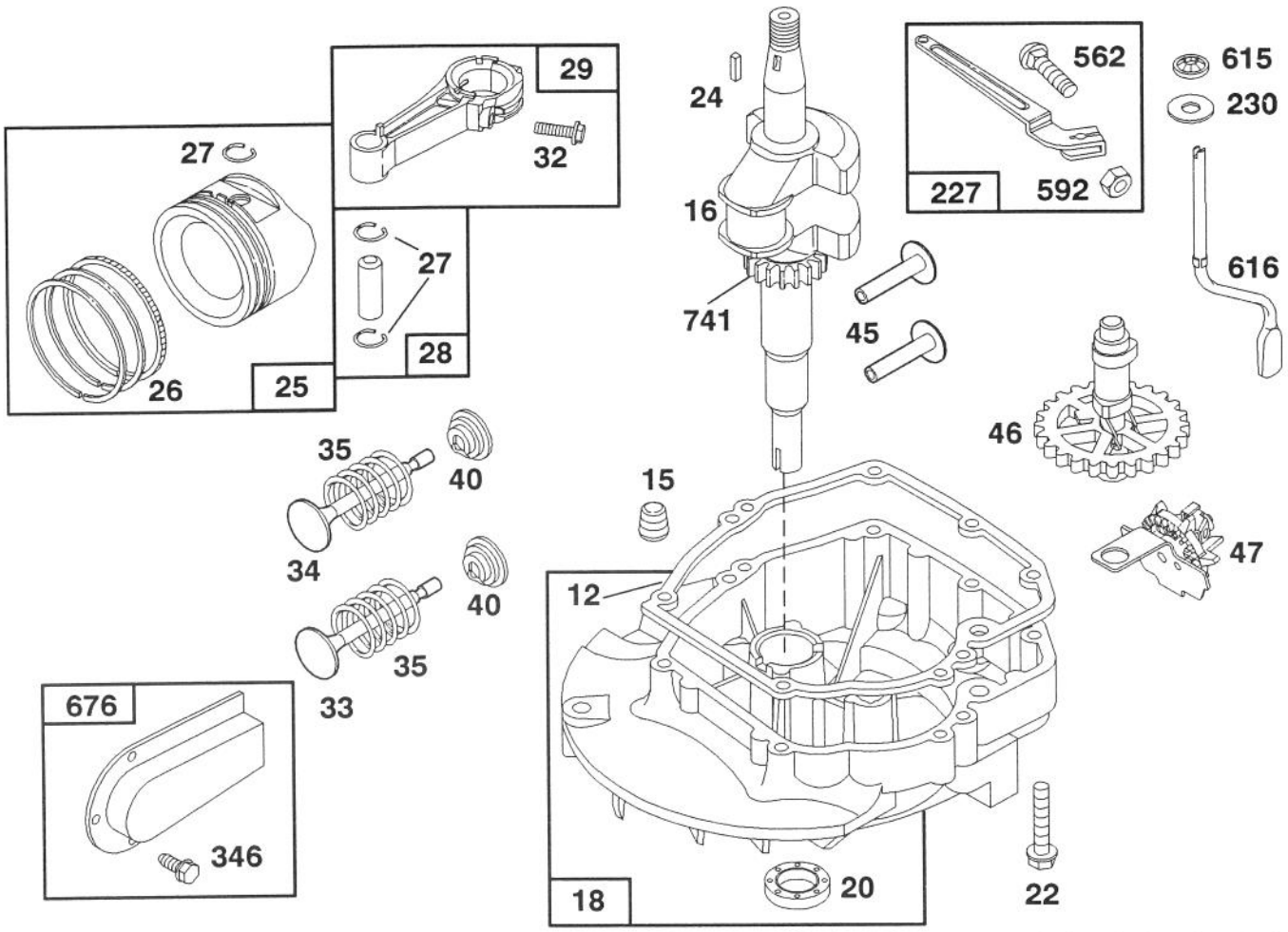

ENGINE BRIGGS & STRATTON MODEL 122702-0182-01

Ref. No.	Part No.	Description	No. Used
★12	272198	Gasket-Crankcase	1
15	93418	Plug-Oil Drain	1
16	494547	Crankshaft	
		Note: Order 94388	
		For Timing Gear Key.	1
18	493279	Sump-Engine	1
★20	399781	Seal-Oil	1
22	94220	Screw-Sump Mtg. Sem	
		Note: 94612 Screw-Sump Mtg.	
		One Used in Hole	
		Nearest Breather.	1
24	222698	Key-Flywheel	1
25	493262	Piston Assy. (Standard)	1
	493385	Piston Assy. (.010" O.S.)	1
	493386	Piston Assy. (.020" O.S.)	1
	493387	Piston Assy. (.030" O.S.)	1
		PISTON RING SETS:	
26	493261	Ring Set-Piston (Std.)	1
	493388	Ring Set-Piston (.010" O.S.)	1
	493389	Ring Set-Piston (.020" O.S.)	1
	493390	Ring Set-Piston (.030" O.S.)	1
27	26026	Lock-Piston Pin	1

Ref. No.	Part No.	Description	No. Used
28	298909	Pin Assembly-Piston (Standard)	1
29	490566	Rod Assembly-Connecting	
		Note: For Connecting Rod	
		with .020" Undersize Crankpin	
		Bearing-Order No. 490743.	1
32	94405	Screw-Connecting Rod	1
33	262651	Valve-Exhaust	1
34	262652	Valve-Intake	1
35	262224	Spring-Valve	1
40	93312	Retainer-Valve Spring	1
45	262204	Tappet-Valve	1
46	492828	Gear-Cam	1
47	493737	Oil Slinger Gear and Bracket	1
227	492349	Lever Assembly-Gov.	1
230	67072	Washer-Gov. Crank	1
346	93705	Screw-Hex. Head	1
562	92613	Bolt-Governor Lever	1
592	231082	Nut-Hex	1
615	94474	Pushnut (Governor Crank)	1
616	262578	Crank-Governor	1
676	224438	Deflector-Muffler	1
741	262598	Gear-Timing	1

★ Included in Gasket Set-Part No. 493263.

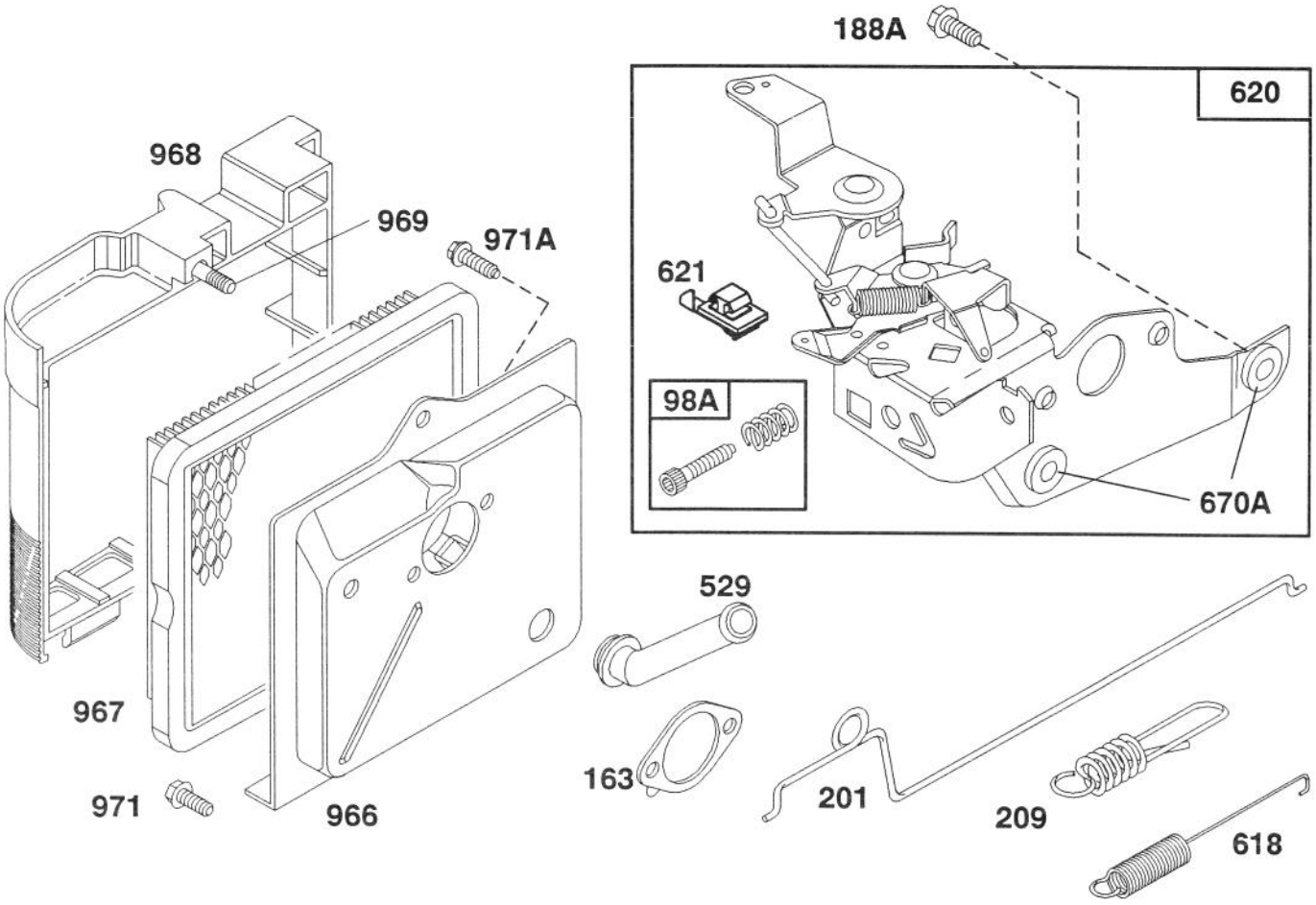

ENGINE BRIGGS & STRATTON MODEL 122702-0182-01

Ref. No.	Part No.	Description	No. Used
98A	493280	Screw Assy.-Speed Adj.	1
★163	272296	Gasket-Air Cleaner	1
188A	94644	Screw-Hex. Head	1
201	262579	Link-Governor	1
209	262661	Spring-Governor	1
529	280943	Grommet-Breather	1
618	262749	Spring-Choke Return	1
620	493894	Bracket Assembly-Carburetor Control	1
621	396847	Switch-Stop	1

Ref. No.	Part No.	Description	No. Used
670A	493823	Spacer-Carburetor Bracket (Includes 2)	1
966	492363	Base-Air Cleaner	1
967	491588	Filter-Air	1
968	280937	Cover-Air Cleaner	1
969	94120	Screw-Cover Mtg.	1
971	94269	Screw-Air Cleaner	1
971A	94121	Screw-Air Cleaner (Base to Carburetor)	1

★ Included in Gasket Set-Part No. 493263.

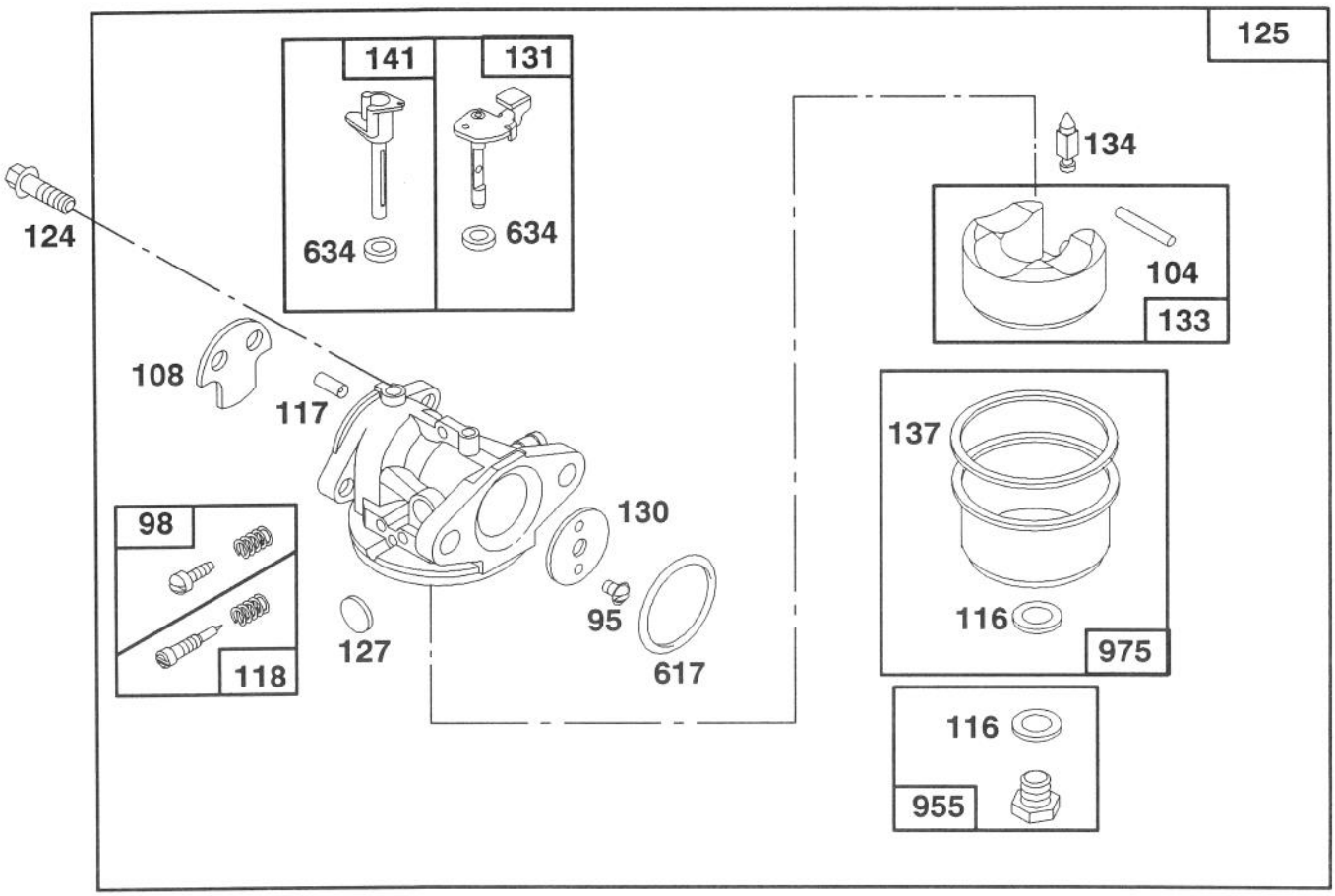

ENGINE BRIGGS & STRATTON MODEL 122702-0182-01

Ref. No.	Part No.	Description	No. Used
95	94098	Screw-Throttle Valve Mounting	1
98	398185	Screw-Idle Adjustment	1
•104	231371	Pin-Float Hinge	1
108	223471	Valve-Choke	1
••◆116		Gasket-Sealing (Sold in Kit Only).	1
•117		Jet (Sold in Kit Only).	1
118	493765	Valve and Spring-Needle	1
124	94525	Screw-Carburetor Mtg.	1
125	494216	Carburetor Assembly	1
•127		Plug-Welch (Sold in Kit Only).	1

Ref. No.	Part No.	Description	No. Used
130	223470	Valve-Throttle	1
131	493267	Shaft and Lever-Throttle	1
133	398187	Float Assy.-Carburetor	1
•134	398188	Valve-Inlet (Includes Seat)	1
••◆137		Gasket-Bowl (Sold in Kit Only).	1
141	494218	Shaft-Choke	1
••◆617	270344	Seal-Fuel Intake Tube	1
••◆634		Washer-Shaft (Sold in Kit Only).	1
955	493763	Screw-Fuel Bowl	1
975	493640	Bowl-Carburetor	1

• Included in Carburetor Overhaul Kit-Part No. 493762.
◆ Included in Carburetor Gasket Set-Part No. 490937.

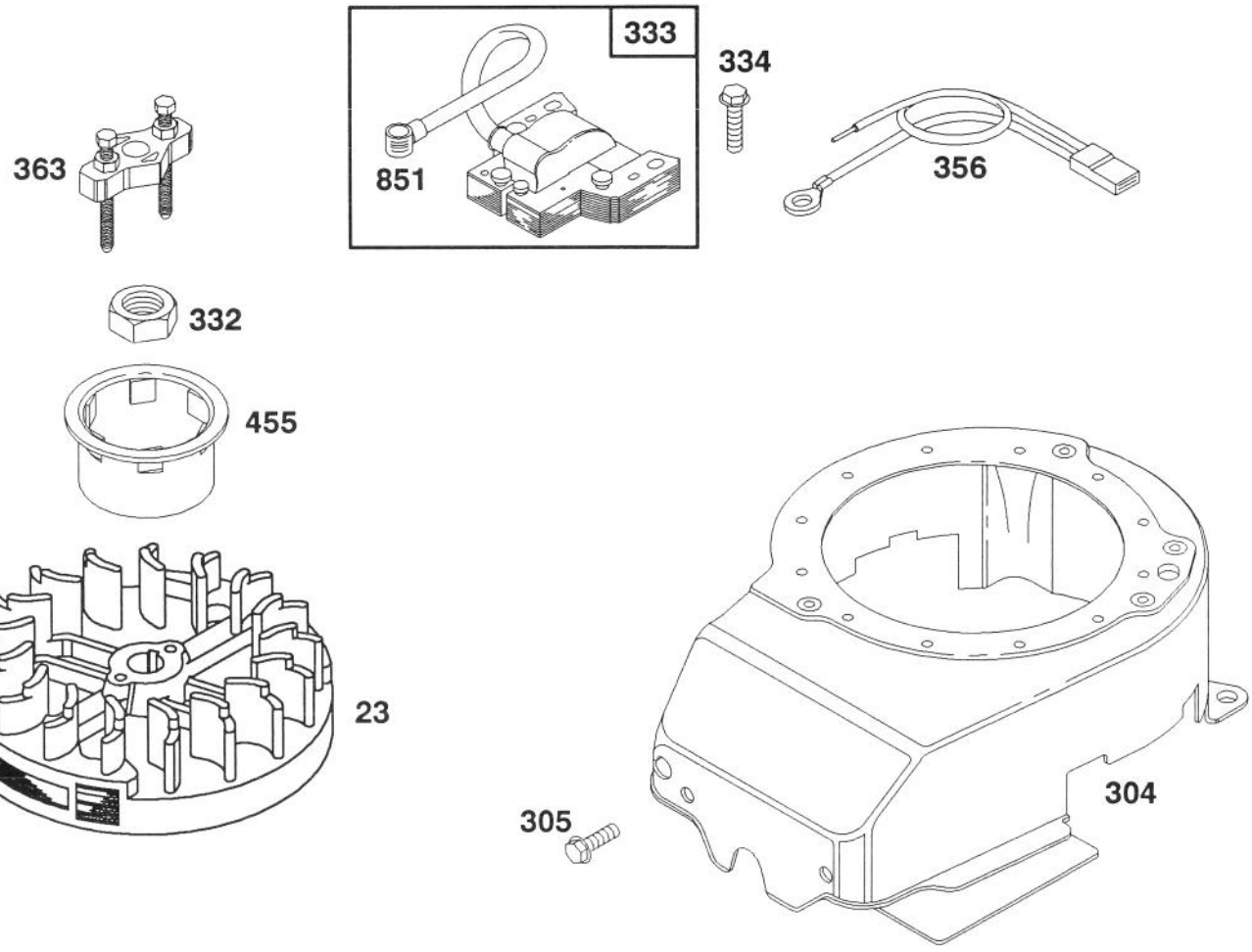

ENGINE BRIGGS & STRATTON MODEL 122702-0182-01

Ref. No.	Part No.	Description	No. Used
23	492177	Flywheel Assembly	1
304	493294	Housing-Blower	1
305	94513	Screw-Hex Head Sem	1
332	92284	Nut-Flywheel	1
333	802574	Armature-Magneto	1

Ref. No.	Part No.	Description	No. Used
334	93381	Screw-Armature Mounting	1
356	398808	Wire-Ground	1
363	19069	Puller-Flywheel	1
455	224250	Cup-Starter	1
851	221798	Terminal-Ignition Cable	1

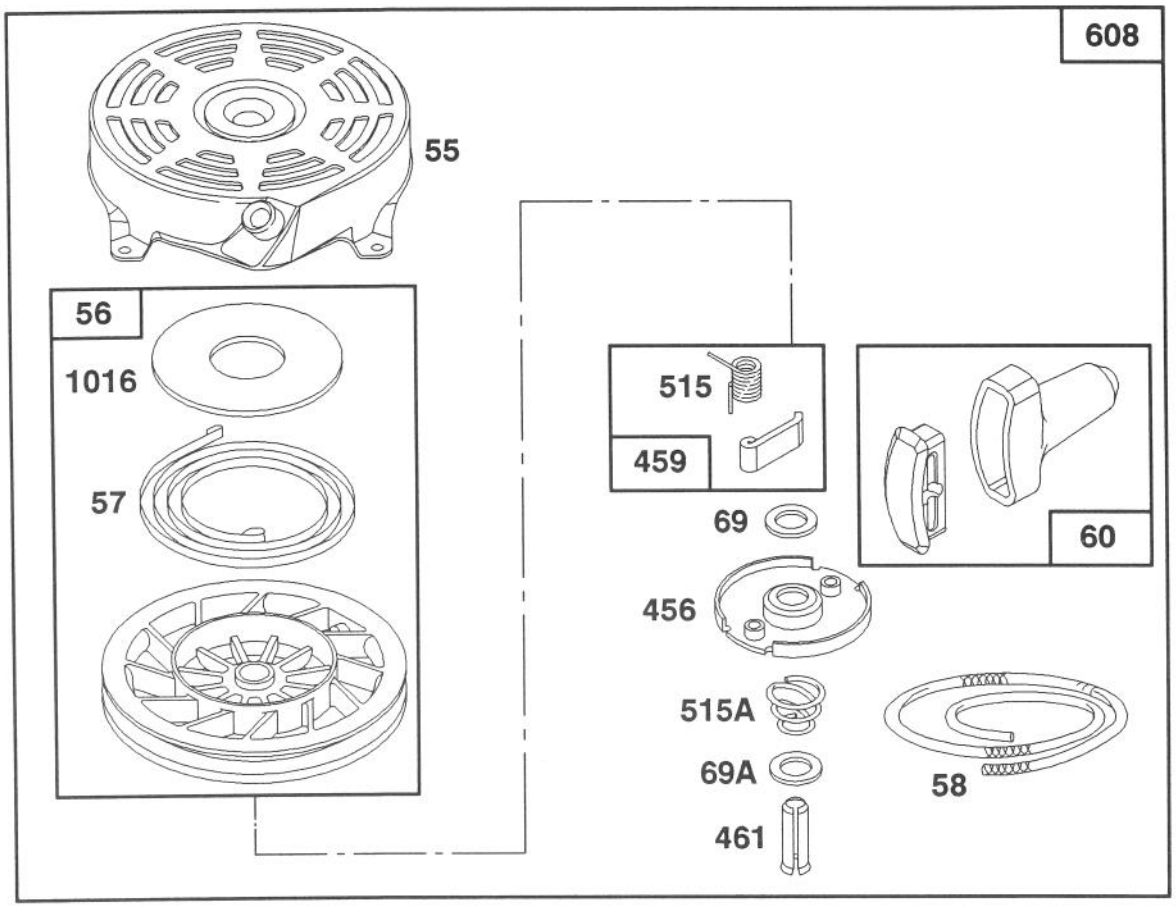

ENGINE BRIGGS & STRATTON MODEL 122702-0182-01

Ref. No.	Part No.	Description	No. Used
55	492831	Housing-Rewind Starter	1
56	492832	Pulley-Rewind Starter	1
57	262594	Spring-Rewind Starter	1
58	280399	Rope-Rewind Starter (Cut to 88-5/8")	1
60	393152	Handle-Rewind Starter	1
69	280973	Washer-Rewind Starter	1
69A	224322	Washer-Rewind Starter	1
456	224321	Retainer-Rewind Starter	1

Ref. No.	Part No.	Description	No. Used
459	492833	Pawl-Starter	1
461	262626	Pin-Starter	1
515	262556	Spring-Pawl	1
515A	262625	Spring-Torsion	1
608	493295	Starter Assy.-Rewind Includes: 94128 Screw-Hex. Hd. 92987 Nut-Hex.	1
1016	224278	Cover-Rewind Starter	1

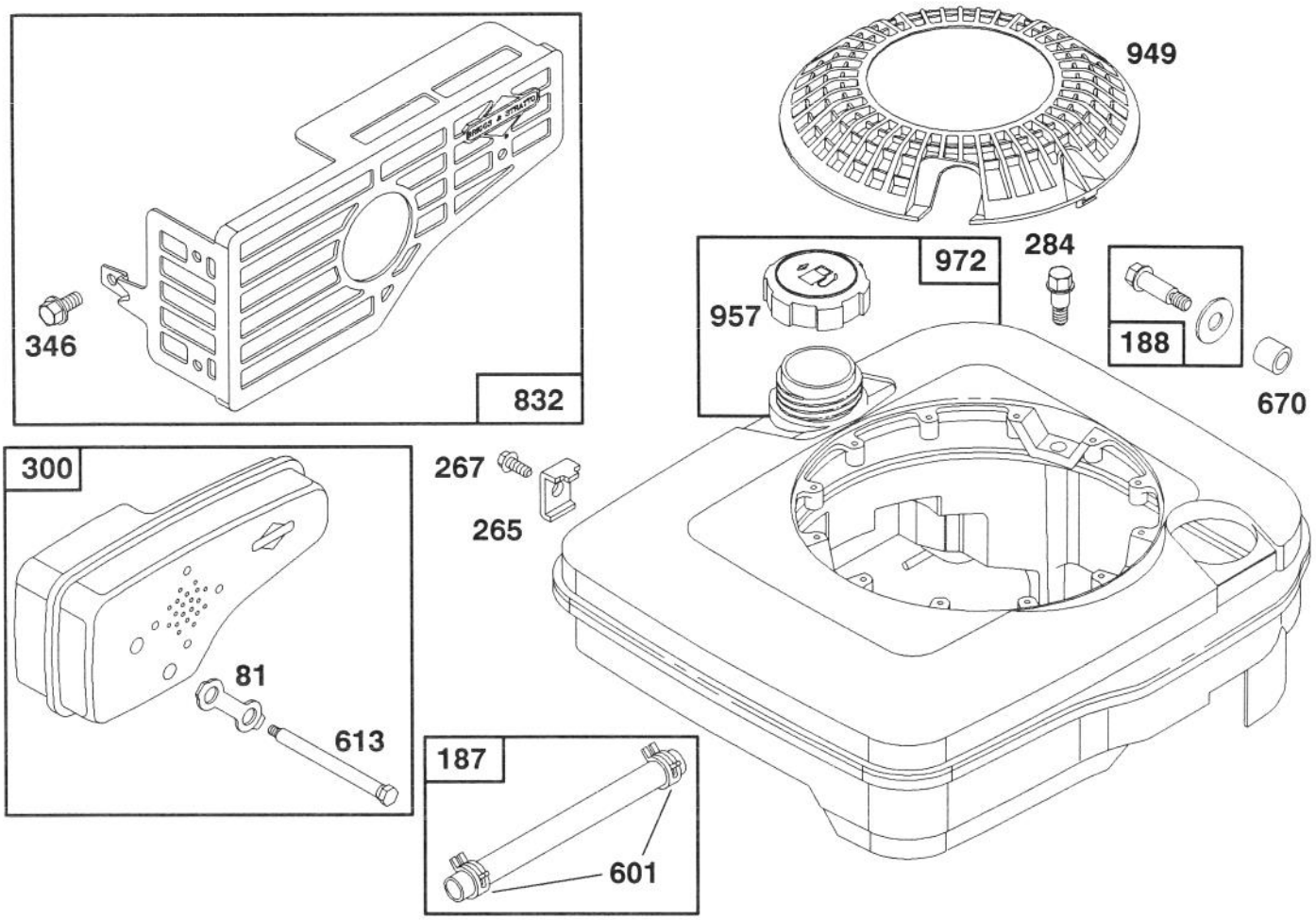

ENGINE BRIGGS & STRATTON MODEL 122702-0182-01

Ref. No.	Part No.	Description	No. Used
81	223664	Lock-Muffler Screw	1
187	492790	Hose-Fuel	1
188	398540	Screw-Tank Mounting (Includes Washer)	1
265	221535	Clamp-Casing	1
267	94204	Screw-Clamp Mtg.	1
284	94511	Screw-Hex Head	1
300	490547	Muffler-Exhaust	1

Ref. No.	Part No.	Description	No. Used
346	94602	Screw-Hex. Head	1
601	93807	Clamp-Hose	1
613	94231	Screw-Muffler Mtg.	1
670	280512	Spacer-Fuel Tank	1
832	494224	Guard-Muffler	1
949	281136	Guard-Finger	1
957	397974	Cap Assembly-Fuel	1
972	494528	Tank Assembly-Fuel	1

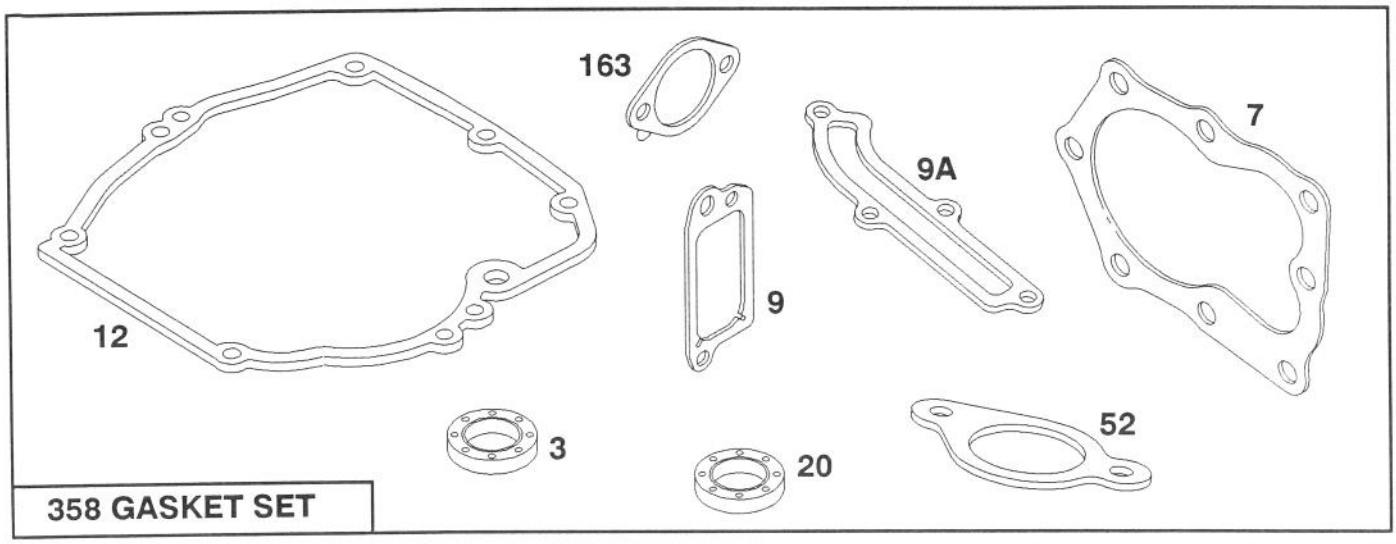

358 GASKET SET

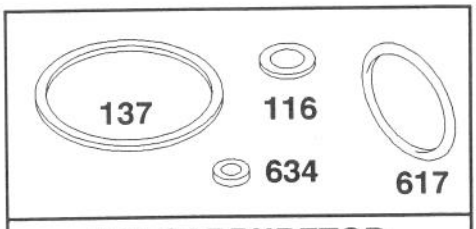

977 CARBURETOR GASKET SET

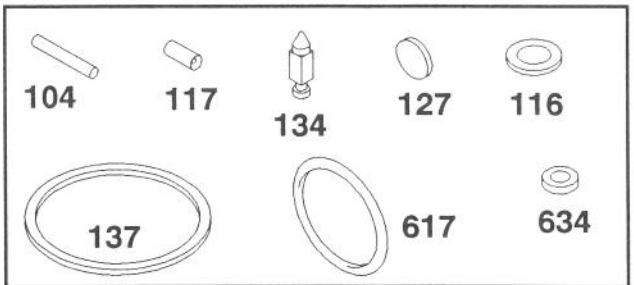

121 CARBURETOR OVERHAUL KIT

ENGINE BRIGGS & STRATTON MODEL 122702-0182-01

Ref. No.	Part No.	Description	No. Used
★3	393862	Seal-Oil	1
★7	272200	Gasket-Cylinder Hd.	1
★9	271904	Gasket-Valve Cover	1
★9A	272238	Gasket-Baffle Plate	1
★12	272198	Gasket-Crankcase	1
★20	399781	Seal-Oil	1
★52	272199	Gasket-Intake Elbow	1
•104	231371	Pin-Float Hinge	1
••◆116		Gasket-Sealing (Sold in Kit Only)	1

Ref. No.	Part No.	Description	No. Used
•117		Jet (Sold in Kit Only).	1
121	493762	Carburetor Overhaul Kit	1
•127		Plug-Welch (Sold in Kit Only).	1
•134	398188	Valve-Inlet (Includes Seat)	1
••◆137		Gasket-Bowl (Sold in Kit Only).	1
★163	272296	Gasket-Air Cleaner	1
358	493263	Gasket Set	1
••◆617	270344	Seal-Fuel Intake Tube	1
••◆634		Washer-Shaft (Sold in Kit Only).	1
977	490937	Gasket Set-Carburetor	1

• Included in Carburetor Overhaul Kit-Part No. 493762.
◆ Included in Carburetor Gasket Set-Part No. 490937.
★ Included in Gasket Set-Part No. 493263.

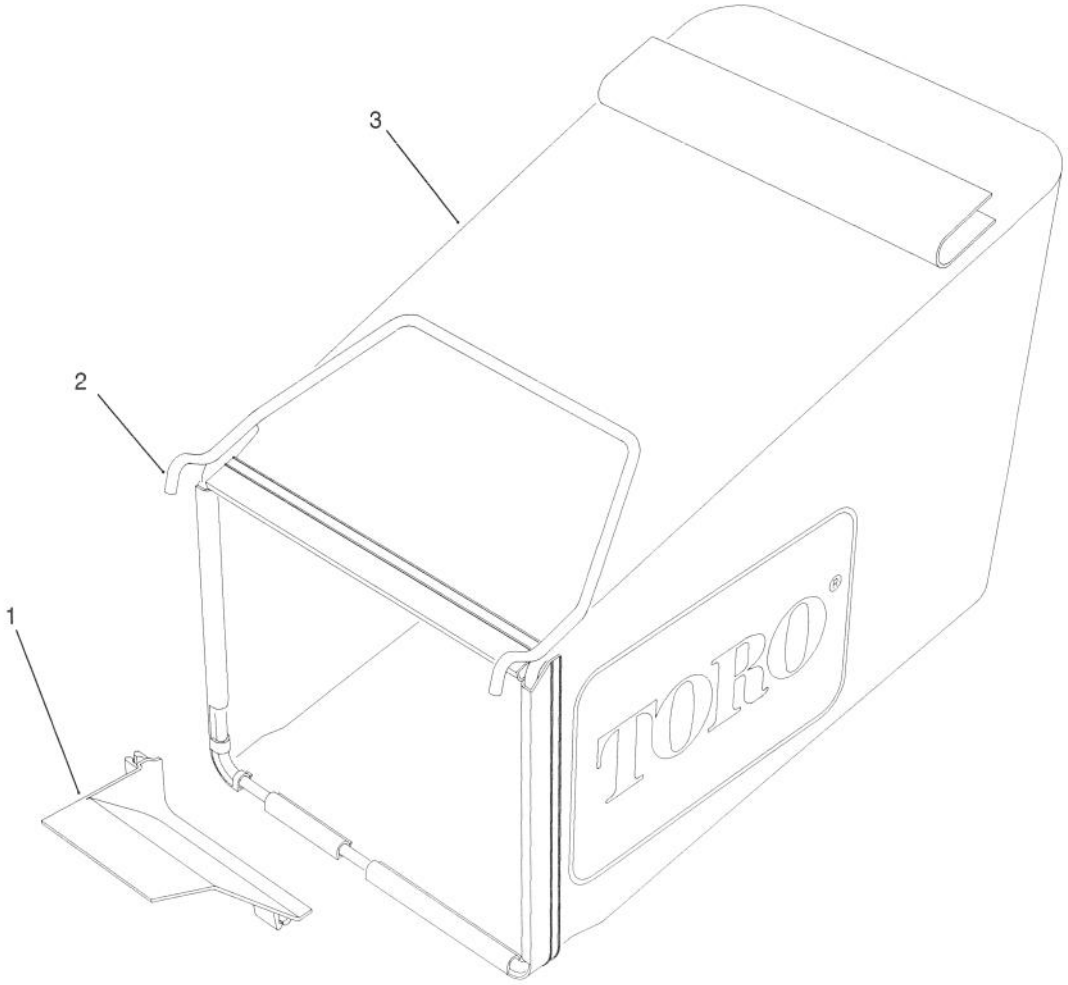

C-0659

GRASS BAG ASSEMBLY

Ref. No.	Part No.	Description	No. Used
1	71-3750	Ramp - Grass Bag	1
2	71-9060	Frame - Grass Bag	1

Ref. No.	Part No.	Description	No. Used
3	71-9050	Bag - Grass	1

PRODUCT CHANGES

In an effort to make improvements available to TORO owners as quickly as possible, minor changes are incorporated into Toro's products from time to time that do not become immediately shown in the Parts Catalog. If such a change has been made in your unit, which is not reflected in your manual, see your TORO Distributor or his Authorized TORO Service Dealer for information and part numbers.

COUNTRIES OTHER THAN THE UNITED STATES OR CANADA

Customers who have purchased TORO products exported from the United States or Canada should contact their Toro Distributor (Dealer) to obtain guarantee policies for your country, province or state. If for any reason you are dissatisfied with your Distributor's service or have difficulty obtaining guarantee information, contact the TORO importer. If all other remedies fail, you may contact us at The Toro Company.

MAINTENANCE RECORD

Date								

Compliance with Radio Interference Regulations Certified.
Certifie Conforme au Reglement sur le Brouillage Radioelectrique.

MAINTENANCE RECORD

Date								