FORM NO. 3315-101

TORO®

MODEL NO. 20926B-2000001 & UP

PARTS CATALOG

48cm REAR BAGGING MOWER

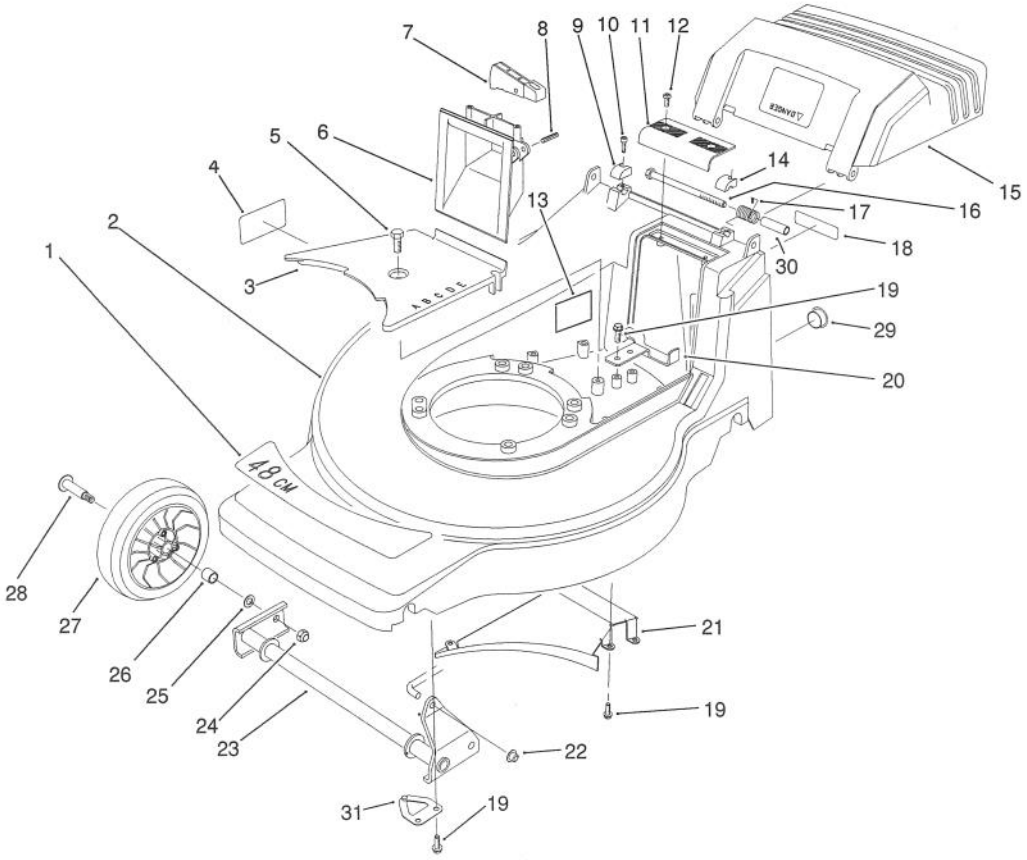

C-0589

HOUSING ASSEMBLY

Ref. No.	Part No.	Description	No. Used
1	71-8290	Decal - 48cm	1
2	14-0049	Housing - 48cm (Incl. Ref. #1, 4, & 13)	1
3	71-7920	Cover - Belt	1
4	62-3860	Decal - Danger	1
5	32144-70	Screw - Hex. Flange Hd.	1
6	71-7870	Grip - Lower	1
7	71-7930	Trigger - H.O.C.	1
8	3284-5	Pin - Roll	1
9	71-7910	Cap - Hinge Bolt R.H.	1
10	65-5210	Screw - Thread Forming	2
11	71-7860	Grip - Upper	1
12	32144-97	Screw - Thread Forming	2
13	66-1700	Decal - Noise Rating	1
14	71-7900	Cap - Hinge Bolt L.H.	1
15	71-8240	Door - Discharge	1
16	322-29	Screw - Cap Hex. Hd.	2
17	71-8300	Spring - Door	2
18	66-0680	Decal - French Regulation	1
19	32144-4	Screw - Thread Forming	10
20	71-7890	Guide - Belt Rear	1
21	71-7990	Ramp - Discharge	1
22	32112-11	Nut - Push	1
23	71-7820	Pivot - Front	1
24	3296-5	Nut - Lock	2
25	40-1940	Washer - Wheel	2
26	27-6250	Bushing - Wheel	4
27	46-1113	Wheel & Tire Assembly (Incl. Ref. #26)	2
28	27-6230	Bolt - Wheel	2
29	2410-74	Plug - Hole	1
30	71-8580	Spacer - Door	2
31	71-8750	Retainer - Shaft	2

©The TORO Company - 1991

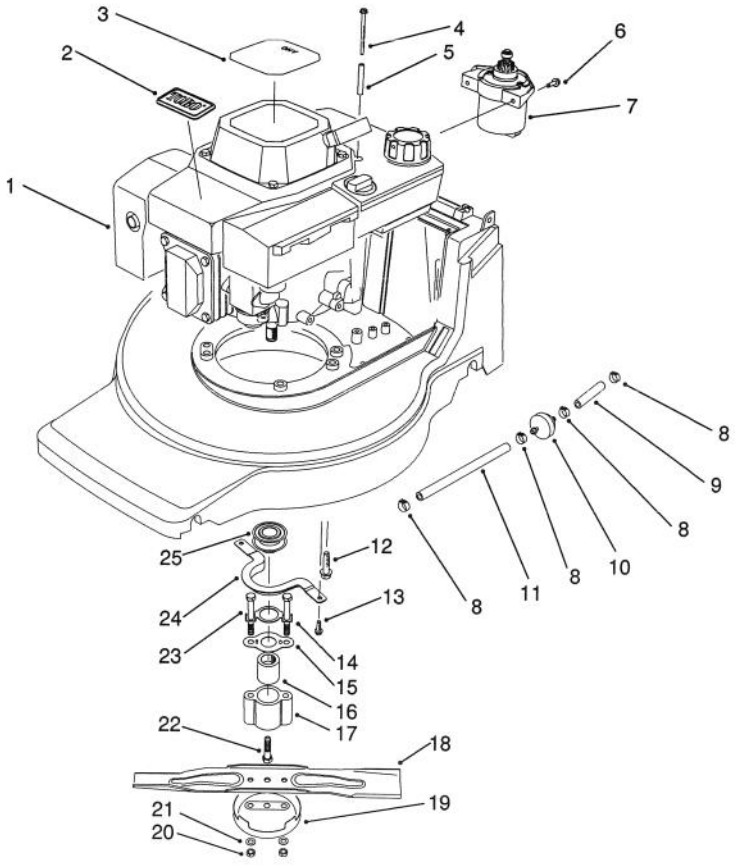

C-0518

ENGINE ASSEMBLY

Ref. No.	Part No.	Description	No. Used
1	72-4142	Engine - OHV KE	1
2	46-8290	Plate - Toro Logo	1
3	57-3120	Decal - Recoil	1
4	56-6610	Screw - Thread Forming	2
5	57-3830	Spacer - Tubular	2
6	56-6380	Screw - Thread Forming	2
7	53-4500	Starter Motor Assembly	1
8	2412-95	Clamp - Fuel	4
9	51-3211	Line - Fuel	1
10	56-6360	Filter - Fuel	1
11	51-3214	Line - Fuel	1
12	11-0590	Screw - Thread Forming	3
13	32144-4	Screw - Thread Forming	2

Ref. No.	Part No.	Description	No. Used
14	71-9220	Bracket - Retainer	1
15	71-8840	Spring - Friction	1
16	71-8780	Hub - Crankshaft	1
17	71-8790	Retainer - Blade	1
18	71-8210	Blade - 48cm	1
19	80-2770	Cup - Anti-Scalp	1
20	3296-6	Nut - Lock	2
21	40-1940	Washer	2
22	71-8950	Screw - Crankshaft	1
23	71-8940	Screw - Blade	2
24	71-7960	Guide - Engine Belt	1
25	62-7550	Pulley - Driver	1

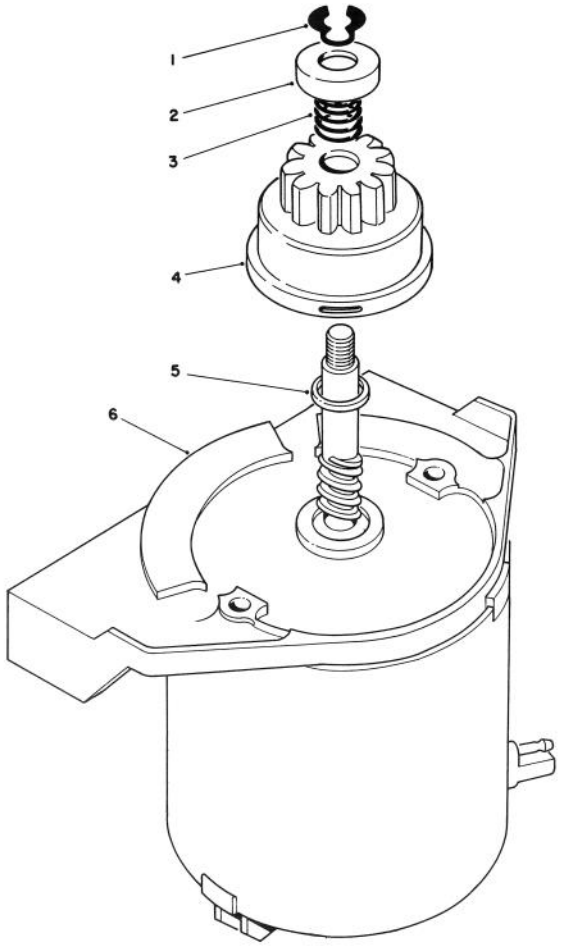

C-0156

STARTER MOTOR ASSEMBLY

Ref. No.	Part No.	Description	No. Used
1	32151-47	Ring - Retaining	1
2	49-2170	Stop - Pinion	1
3	44-0500	Spring - Compression	1
4	43-4370	Pinion Assembly	1
5	23-9591	Spacer	1
6	53-4460	Frame - End	1
*	53-4500	Starter Motor Assembly (Incl. Ref. #1-6)	1

*Not Illustrated

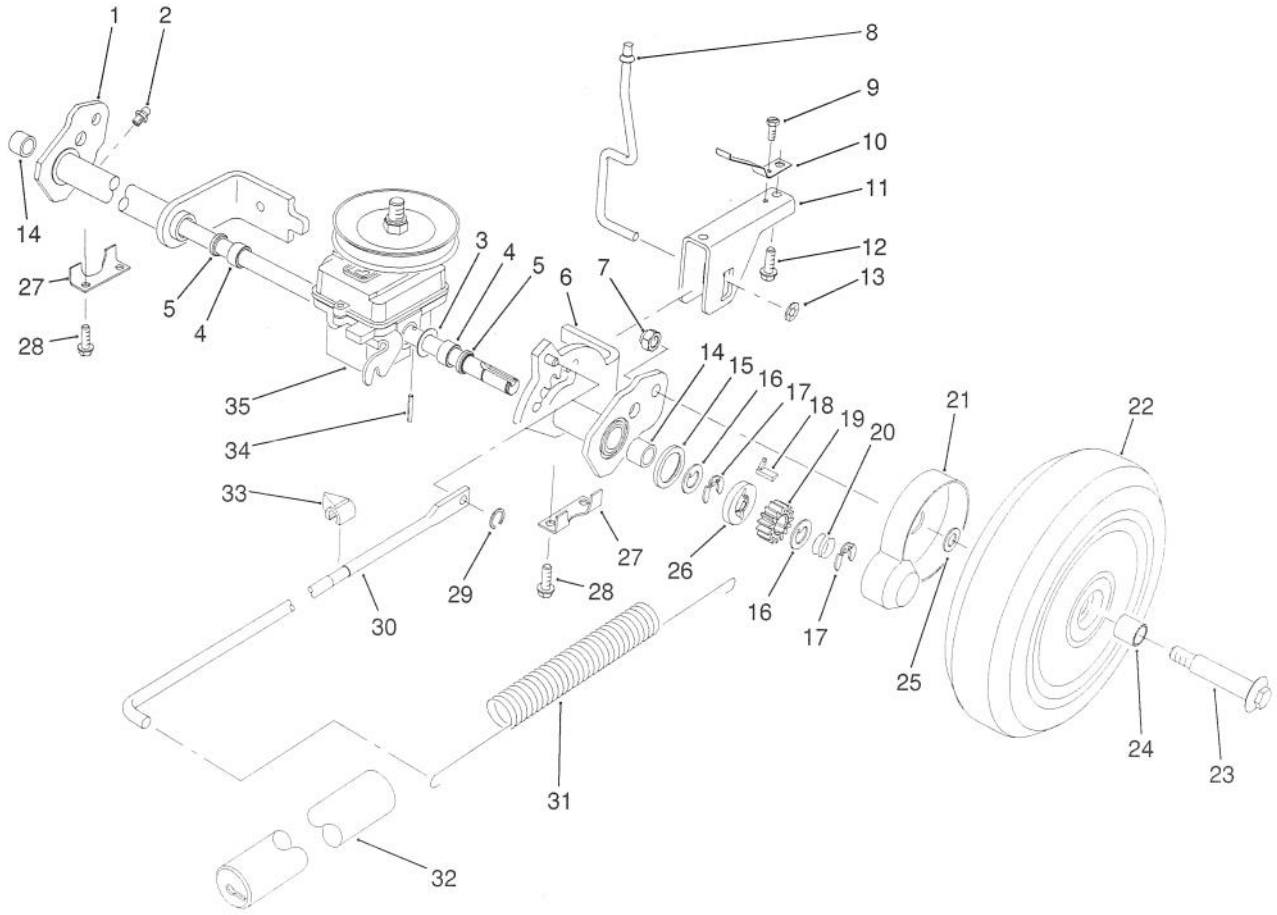

C-0364

S. P. REAR AXLE ASSEMBLY

Ref. No.	Part No.	Description	No. Used
1	71-8430	Rear Pivot Assembly R.H. (Incl. Ref. #2, 4, 5 & 14)	1
2	302-26	Fitting - Grease	2
3	36-4780	Washer	2
4	47-2890	Bushing - Sleeve	2
5	47-6730	Seal - Grease	2
6	71-8440	Rear Pivot Assembly L.H. (Incl. Ref. #2, 4, 5 & 14)	1
7	3296-5	Nut - Lock	2
8	71-7840	Rod - Trigger	1
9	32144-31	Screw - Thread Forming	1
10	71-8060	Spring - Trigger Return	2
11	71-8080	Saddle - H.O.C.	1
12	63-8590	Screw - Thread Forming	2
13	32112-13	Nut - Push	1
14	48-2060	Bearing - Needle	2
15	65-4710	Washer - Friction	2
16	65-4740	Washer - Keyed Thrust	4
17	65-2720	Ring - Retaining	4

Ref. No.	Part No.	Description	No. Used
18	66-6050	Key - Rocking L.H.	1
*	66-6040	Key - Rocking R.H.	1
19	65-4750	Gear - Pinion	2
20	65-4720	Spring - Compression	2
21	74-1660	Cover - Wheel	2
22	11-9519	Wheel, Tire & Gear Assy. (Incl. Ref. #24)	2
23	27-6230	Bolt - Wheel	2
24	27-6250	Bushing - Wheel	4
25	74-1670	Spacer - Wheel	2
26	65-4760	Washer - Clutch	2
27	71-7770	Plate - Rear Suspension	2
28	32144-4	Screw - Thread Forming	4
29	32151-93	Ring - Grip	1
30	71-7970	Rod - Link	1
31	71-7740	Spring - Counterbalance	1
32	71-8450	Cover - Spring	1
33	71-7980	Indicator - H.O.C.	1
34	32121-88	Pin - Roll	2
35	71-8250	Gearbox Assembly	1

*Not Illustrated

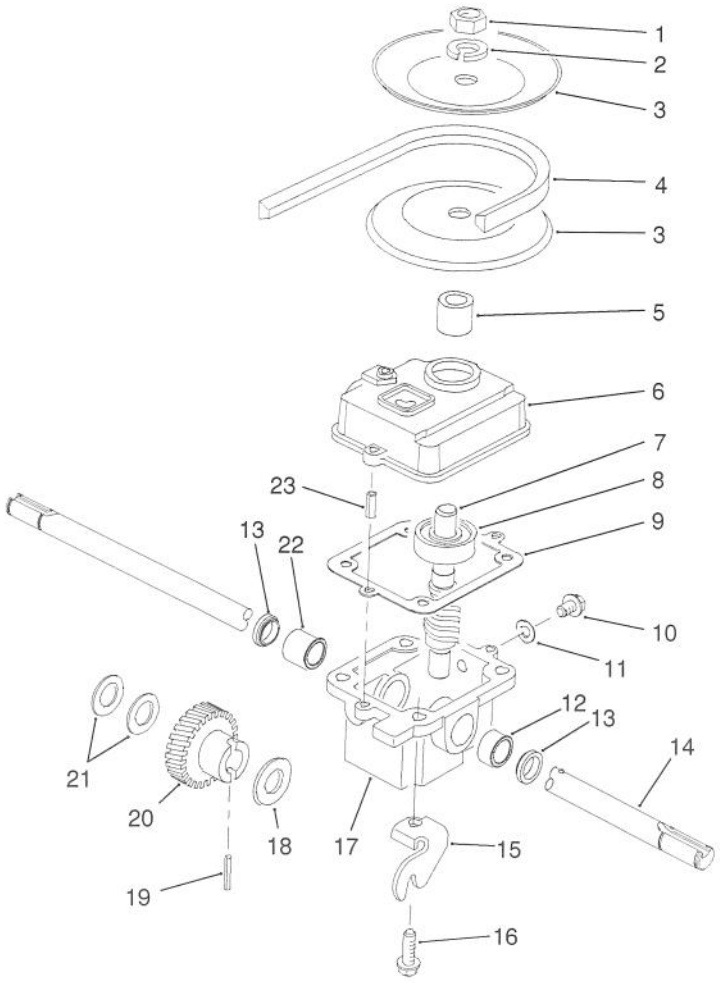

C-0365

GEARBOX ASSEMBLY NO. 71-8250

Ref. No.	Part No.	Description	No. Used
1	3220-4	Nut - Jam	1
2	3253-6	Washer - Lock	1
3	71-7750	Pulley - Half	2
4	71-8500	Belt - V	1
5	71-7570	Spacer - Pulley	1
6	39-1103	Cover - Gearbox	1
7	71-8050	Shaft & Worm	1
8	47-7250	Bearing - Ball	1
9	36-1000	Gasket - Gearbox	1
10	28-1550	Screw - Drain	1
11	46-9640	Gasket - Drain Screw	1
12	47-2890	Bushing - Sleeve	1

Ref. No.	Part No.	Description	No. Used
13	47-6730	Seal - Oil	2
14	71-7880	Shaft - Output	1
15	71-8120	Bracket - Traction	1
16	49-2040	Screw - Thread Forming	4
17	33-2061	Case - Gearbox	1
18	3-0724	Washer - Thrust	1
19	32121-120	Pin - Roll	1
20	71-8140	Gear - Helical	1
21	36-4780	Washer - Thrust	2
22	47-2900	Bushing - Sleeve	1
23	32121-1	Pin - Roll	2

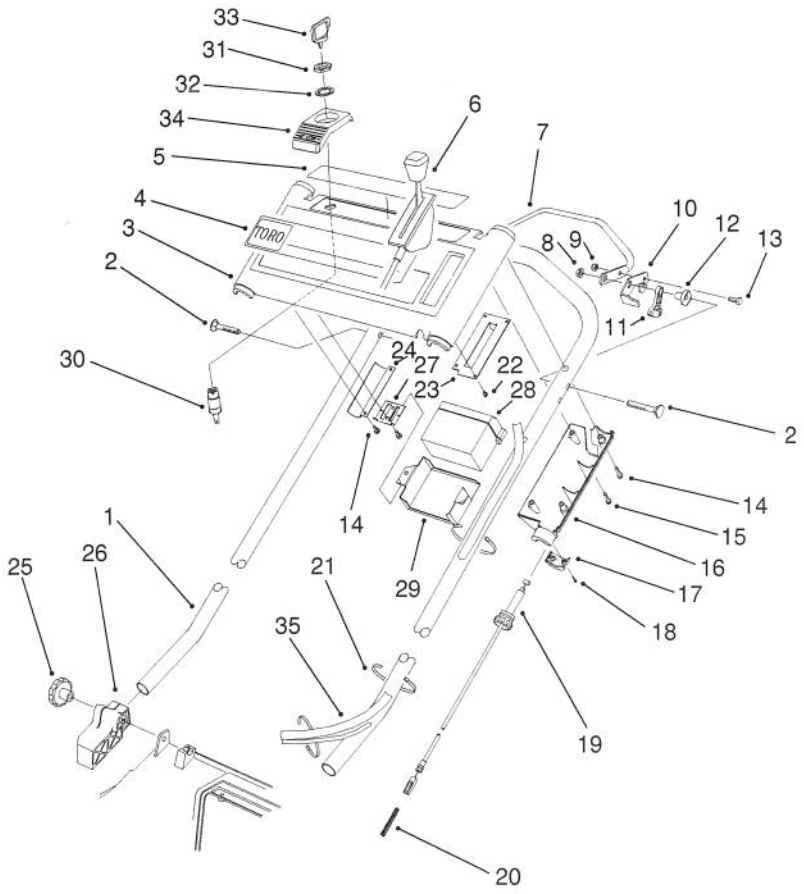

C-0517

S. P. HANDLE ASSEMBLY

Ref. No.	Part No.	Description	No. Used
1	71-9020	Handle	1
2	17-9426	Screw - Handle	2
3	14-0509	Panel - Control (Incl Ref. #4, & 5)	1
4	71-8330	Decal - TORO Logo	1
5	71-8570	Decal - Danger	1
6	66-0232	Control - Throttle Bend Type #1 Sheath Lg. 42.50 Wire Lg. 2 1/2	1
7	46-9900	Bar - Control	1
8	3296-29	Nut - Flange Lock	2
9	3296-42	Nut - Lock	1
10	46-8800	Lever - Control	1
11	46-5520	Lever - Traction	1
12	66-0330	Support - Spacer	2
13	321-3	Screw - Cap Hex. Hd.	1
14	32144-97	Screw - Thread Forming	9
15	32104-121	Screw - Thread Forming	1
16	71-7680	Cover - Throttle Lower	1
17	71-7630	Cap - Throttle Lower	1
18	32144-99	Screw - Thread Forming	2
19	71-8110	Cable - Traction	1
20	71-8310	Spring - Gearbox Return	1
21	3290-378	Tie - Cable	3
22	32144-98	Screw - Thread Forming	4
23	71-8040	Plate - Throttle	1
24	71-8130	Bracket - Panel	1
25	19-4050	Knob - Handle	2
26	71-8100	Mount - Handle R.H.	1
*	71-8090	Mount - Handle L.H.	1
27	71-8280	Bracket - Battery	2
28	63-8570	Battery Ass'y	1
29	63-8480	Retainer - Battery	1
30	46-5780	Switch - Starter (Incl. Ref. #31, & 32)	1
31	218-461	Nut - Lock	1
32	3254-5	Washer - Lock	1
33	63-8360	Key - Ignition	1
34	71-8200	Bracket - Ignition Switch	1
35	49-8312	Wire Harness	1

*Not Illustrated

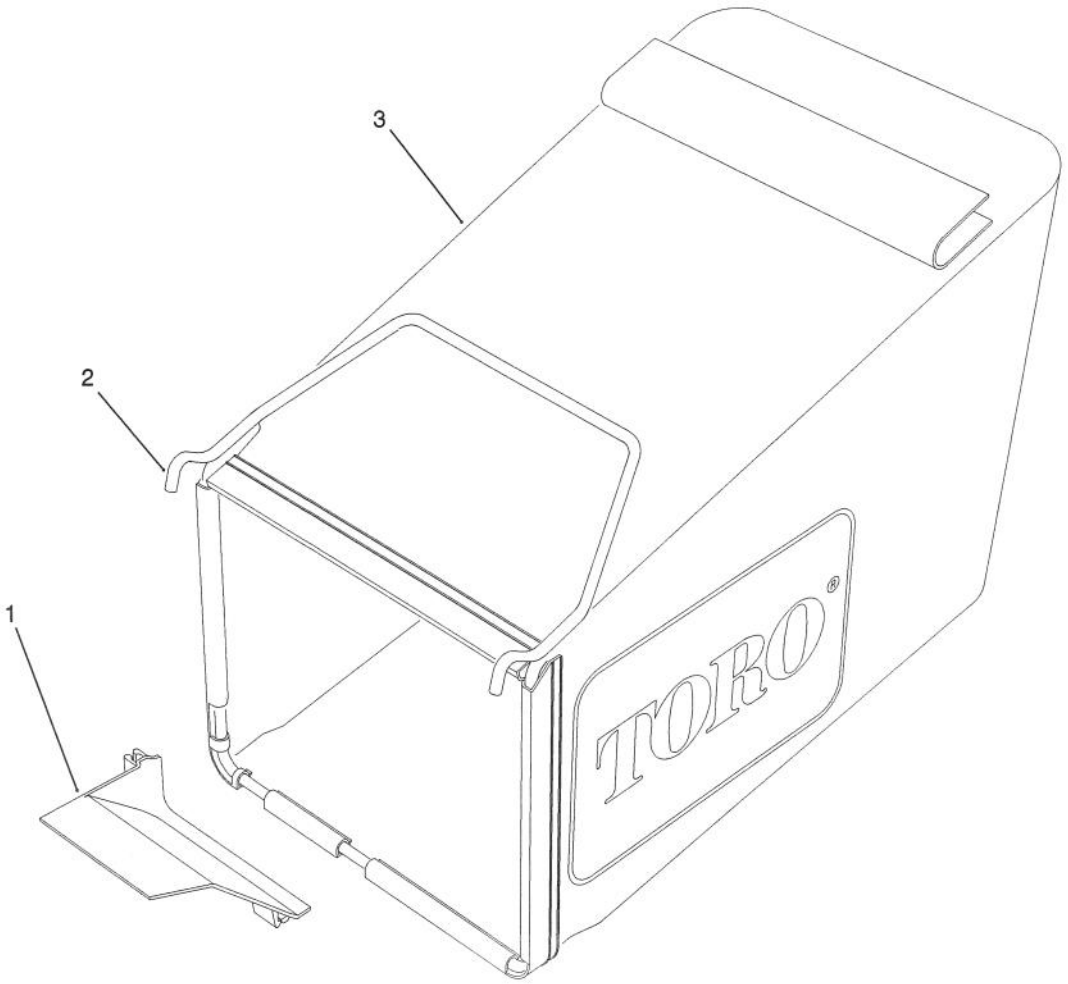

C-0659

GRASS BAG ASSEMBLY

Ref. No.	Part No.	Description	No. Used
1	71-3750	Ramp - Grass Bag	1
2	71-9060	Frame - Grass Bag	1

Ref. No.	Part No.	Description	No. Used
3	71-9050	Bag - Grass	1

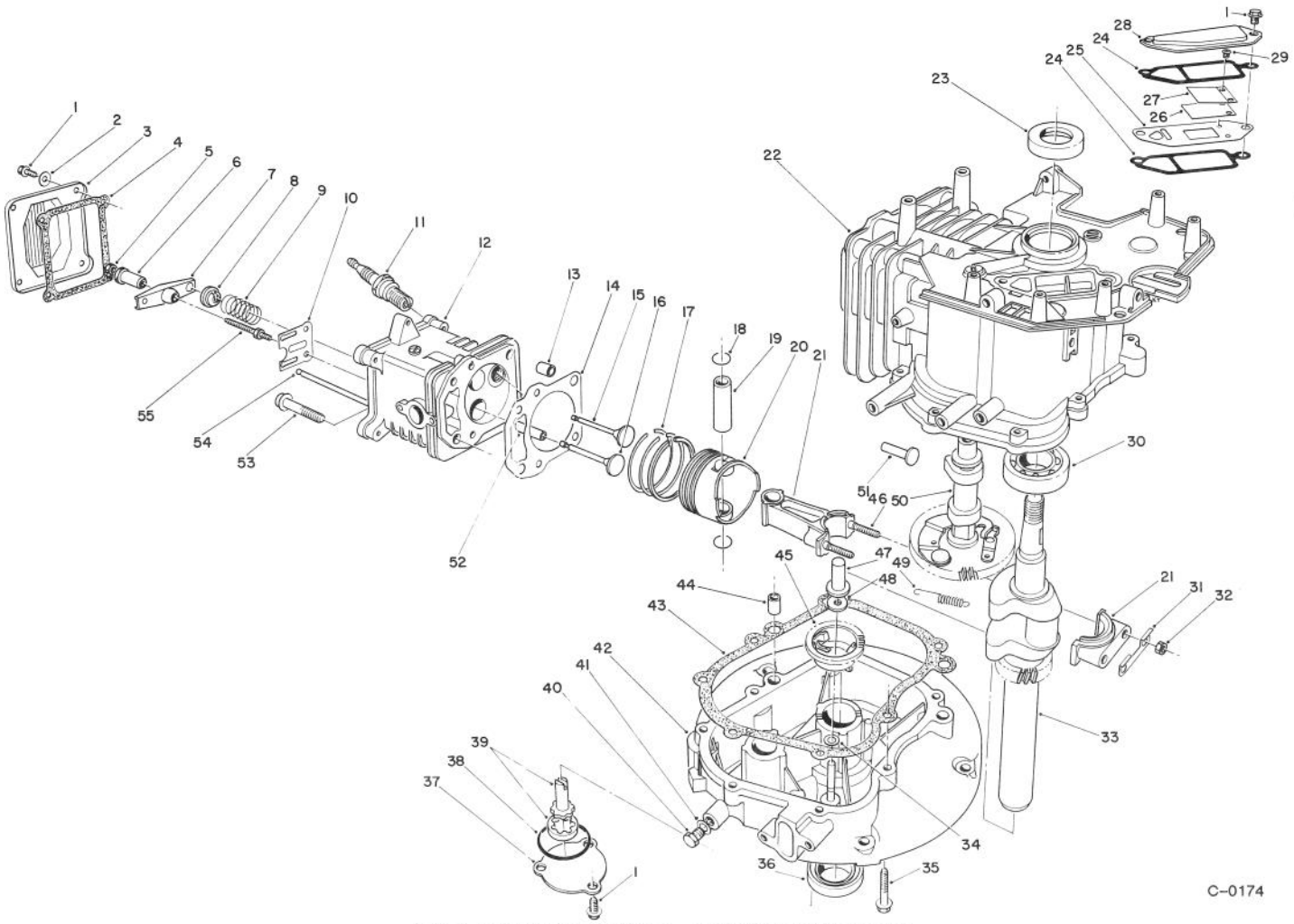

CRANKCASE ASSEMBLY (MODEL NO. VML0-5)

Ref. No.	Part No.	Description	No. Used
1	81-1170	Bolt	9
2	81-3790	Washer	4
3	81-3780	Cover - Rocker Arm	1
4	81-3770	Gasket - Cover	1
5	81-3760	Nut - Jam	2
6	81-3750	Pivot - Rocker Arm	2
7	81-3740	Arm - Rocker	2
8	81-3730	Retainer - Valve Spring	2
9	81-3720	Spring - Valve	2
10	81-3710	Guide - Push Rod	1
11	81-3250	Plug - Spark	1
12	81-5540	Head - Cylinder (Incl. Ref. #52)	1
13	81-3690	Pin - Dowel	2
14	81-4710	Gasket - Cylinder Head	1
*	81-3820	Gaskey Set	1
15	81-3660	Valve - Exhaust	1
16	81-3670	Valve - Intake	1
17	81-3650	Piston Ring Set	1
18	50-0960	Circlip	2
19	81-3630	Pin - Piston	1
20	81-3620	Piston	1
21	81-3390	Connecting Rod Assembly (Incl. Ref. #31, & 46)	1
22	81-3280	Block - Engine (Incl. Ref. #23 & 30)	1

Ref. No.	Part No.	Description	No. Used
23	81-3290	Seal - Upper Crankshaft	1
24	81-3300	Gasket - Breather	2
25		Plate - Breather	1
26		Valve - Reed	1
*	81-3370	Reed Valve Assembly (Incl. Ref. #25, & 27-29)	1
27		Retainer - Reed Valve	1
28	81-3320	Cover - Breather	1
29		Screw - Reed Valve	2
30	81-3380	Bearing - Ball	1
31	81-3400	Plate - Lock	1
32	50-0510	Nut	2
33	81-3420	Crankshaft	1
34	81-3440	Washer	1
35	81-3450	Bolt	7
36	81-3460	Seal - Lower Crankshaft	1
37	81-3470	Cover - Oil Pump	1
38	81-3480	Seal - O-Rlng	1
39	81-3490	Oil Pump Assembly	1
40	81-4970	Plug - Oil Drain	1
41	81-3510	Gasket - Oil Plug	1
42	81-3520	Crankcase - Lower	1
43	81-3530	Gasket - Crankcase	1

*Not Illustrated

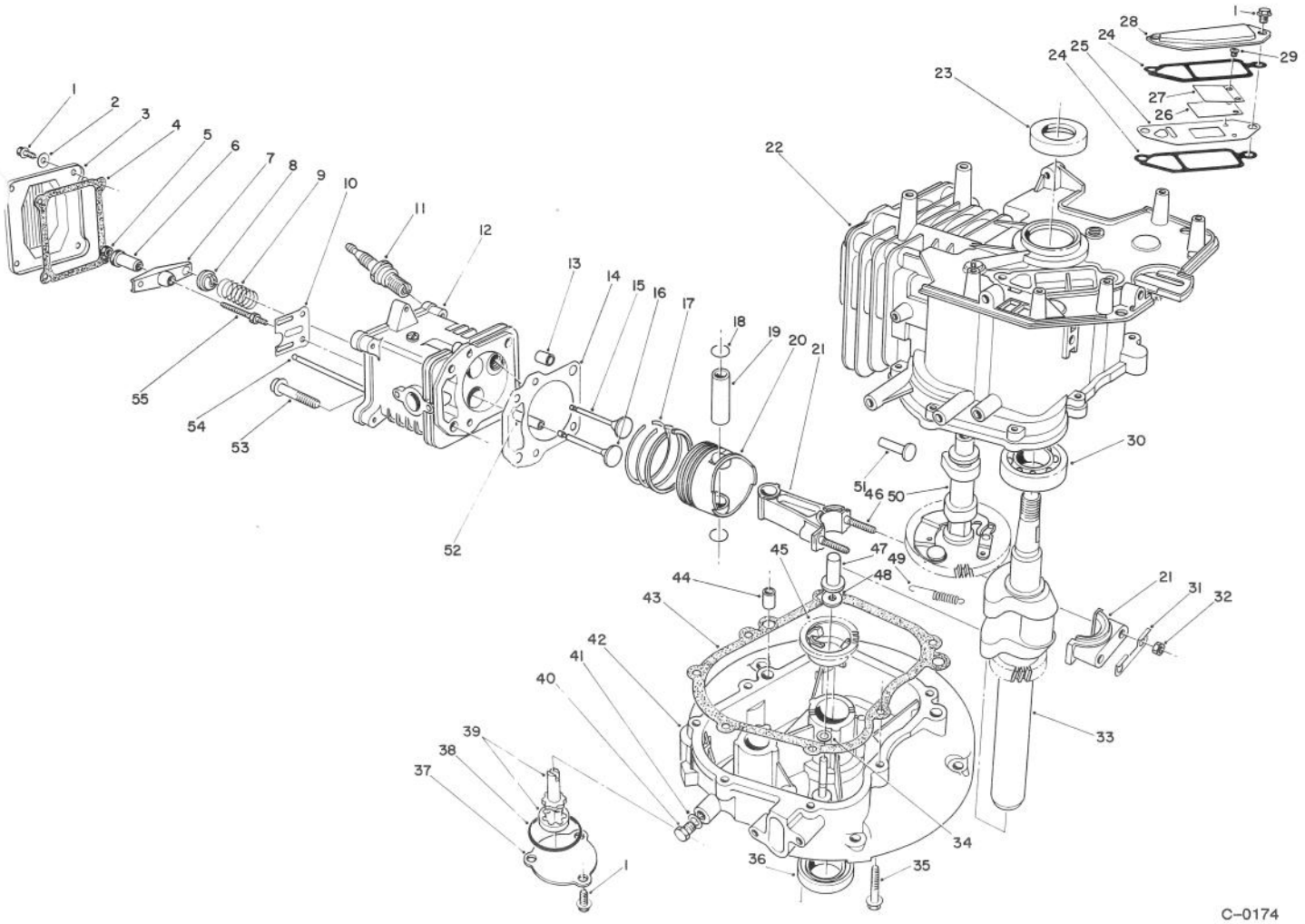

CRANKSHAFT ASSEMBLY (CONTINUED) (MODEL NO. VML0-5)

Ref. No.	Part No.	Description	No. Used
44	50-0450	Pin - Dowel	2
45	81-3550	Governor Flyweight Ass'y	1
46	81-3610	Stud - Connecting Rod	2
47	81-3560	Plunger - Governor	1
48	81-3570	Washer	1
49	81-3580	Spring - Comp. Release	1
50	81-5550	Camshaft Assembly (Incl. Ref. #49)	1

Ref. No.	Part No.	Description	No. Used
51	81-3600	Tappet	2
52	81-3830	Guide - Valve	2
53	50-0190	Bolt	4
54	81-3810	Rod - Push	2
55	81-3800	Stud - Rocker Arm	2
*	13-5939	Short Block Assembly	1
*	75-9850	Tube - Oil Drain	1

*Not Illustrated

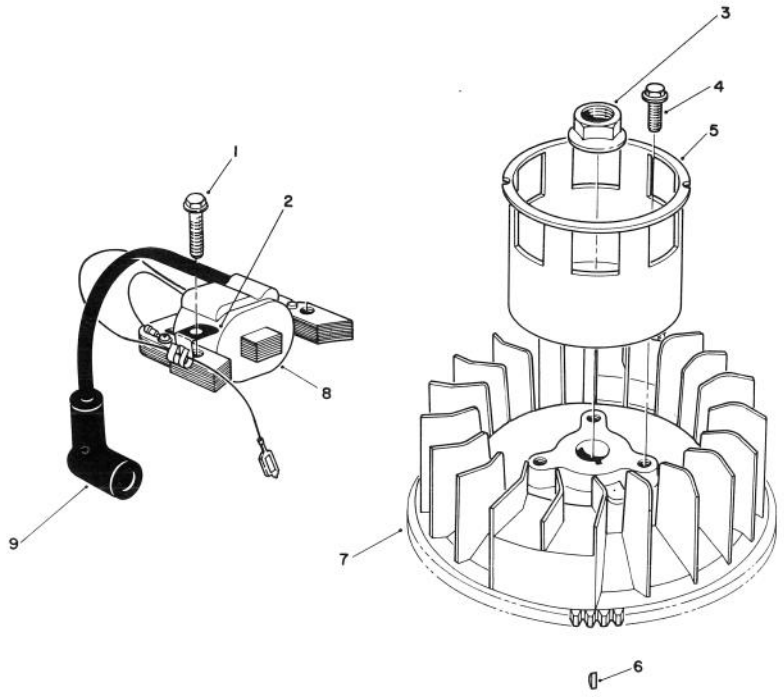

T-0723

MAGNETO & FLYWHEEL ASSEMBLY (MODEL NO. VML0-5)

Ref. No.	Part No.	Description	No. Used
1	53-0860	Bolt	2
2	81-1480	Clamp	1
3	81-3890	Nut	1
4	81-1300	Bolt	3
5	81-3910	Cup - Starter	1

Ref. No.	Part No.	Description	No. Used
6	81-3930	Key - Flywheel	1
7	81-3920	Flywheel	1
8	81-5580	Magneto Coil Assembly	1
9	81-3860	Cover - Spark Plug	1

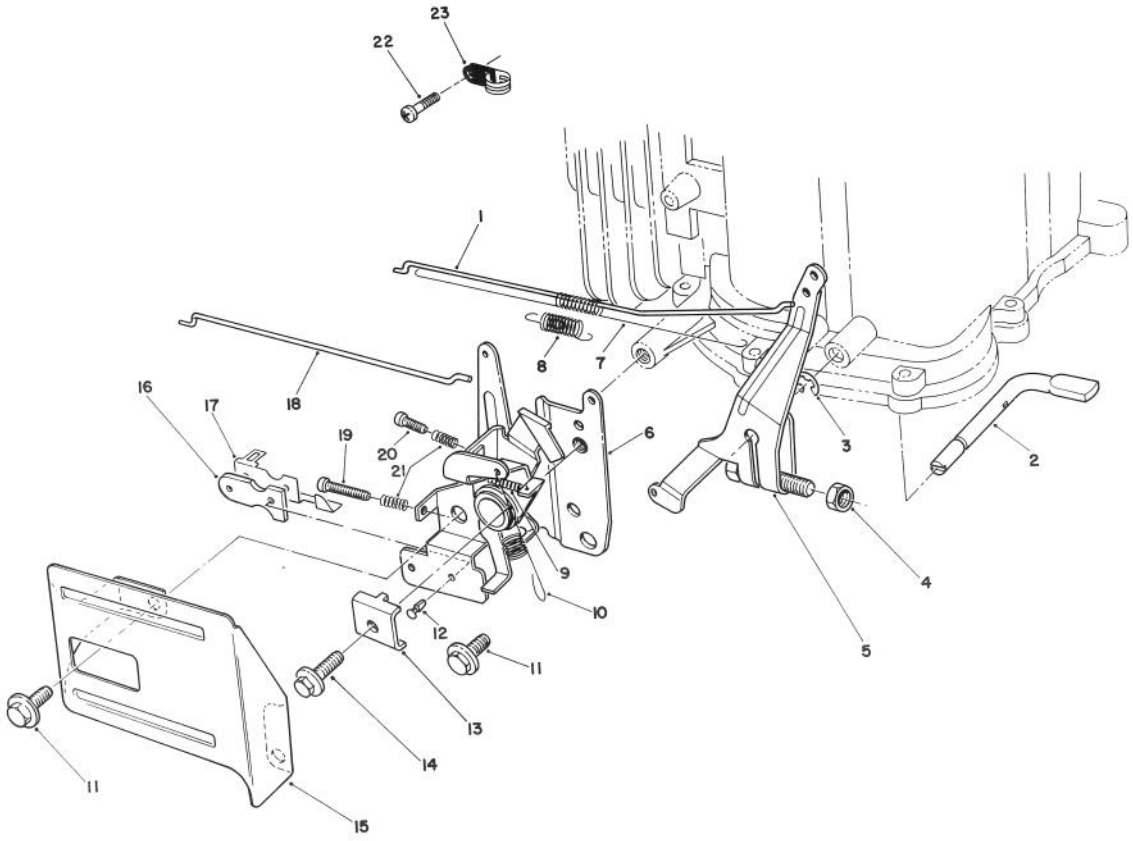

C-0159

GOVERNOR ASSEMBLY (MODEL NO. VML0-5)

Ref. No.	Part No.	Description	No. Used
1	81-4450	Rod - Carburetor	1
2	81-4480	Shaft - Governor	1
3	81-4540	E-Ring	1
4	81-3760	Nut	1
5	81-4500	Governor Arm Assembly	1
6	81-4510	Throttle & Choke Control	1
7	81-4470	Spring - Carburetor Rod	1
8	81-4460	Spring - Choke Lever	1
9	81-4570	Spring	1
10	81-4520	Spring - Governor	1
11	81-1170	Bolt	2
12	81-4530	Rivet	2

Ref. No.	Part No.	Description	No. Used
13	81-1690	Clamp - Cable	1
14	50-0130	Bolt	1
15	57-5750	Guard - Throttle	1
16	81-1830	Insulator - Kill Switch	1
17	81-1840	Terminal - Switch	1
18	81-4440	Rod - Choke	1
19	81-4560	Screw	1
20	81-4550	Screw	1
21	81-2900	Spring	2
22	81-0380	Screw	1
23	81-4780	Clamp	1

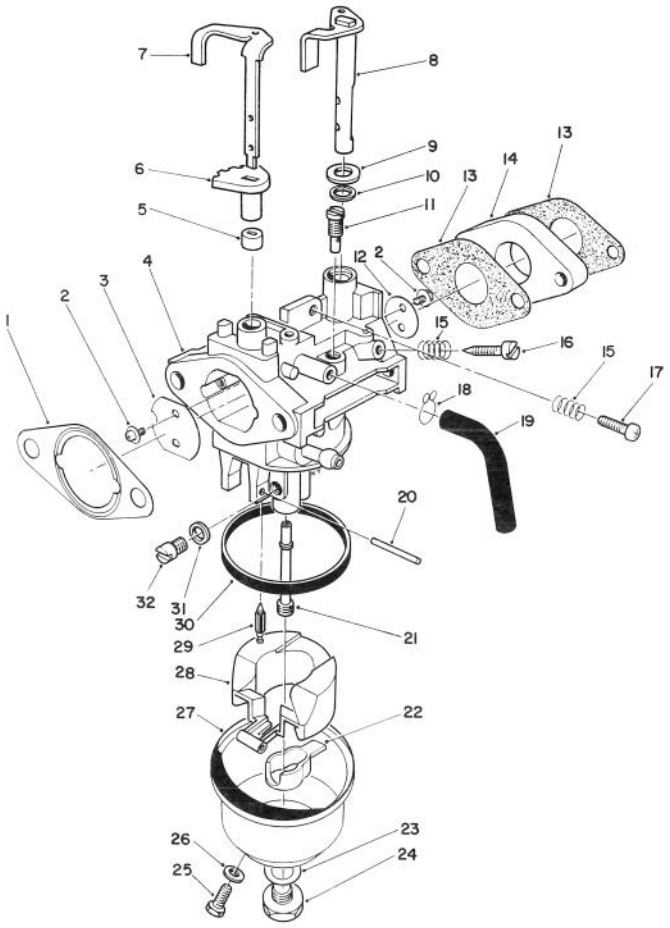

C-0160

CARBURETOR ASSEMBLY (MODEL NO. VML0-5)

Ref. No.	Part No.	Description	No. Used
1	81-4250	Gasket - Air Cleaner	1
2	81-2710	Screw - Choke Valve	4
3	81-2720	Valve - Choke	1
4		Body - Carburetor	1
5	81-5530	Ring - Choke (Lower)	1
6	81-5520	Ring - Choke (Upper)	1
7	81-5510	Shaft - Choke Control	1
8	81-2920	Shaft - Throttle Valve	1
9	81-4280	Washer	1
10	81-4290	Seal - Throttle Shaft	1
11	81-5620	Jet - Pilot (#38.8)	1
12	81-2940	Valve - Throttle	1
13	81-5560	Gasket - Carburetor	2
14	81-5570	Block - Insulator	1
15	81-2580	Spring - Pilot Screw	2
16	50-2360	Screw - Pilot	1
17	50-0250	Screw - Idle Stop	1
18	81-4300	Clamp	1
19	81-4310	Tube - Bowl Vent	1
20	81-5600	Pin - Hinge	1
21	81-5630	Nozzle - Main	1
22	81-4940	Spacer - Float	1

Ref. No.	Part No.	Description	No. Used
23	81-2650	Gasket - Bowl Screw	1
24	81-2660	Screw - Bowl	1
25	81-2670	Screw - Drain	1
26	81-2680	Gasket - Drain Screw	1
27	81-4340	Bowl - Float	1
28	81-4920	Float	1
29	81-4700	Needle	1
30	81-2630	Gasket - Float Bowl	1
31	81-4350	Spacer	1
32	81-5610	Jet - Main (#70)	1
*	81-5640	Jet - Main (77.5 High Alt.)	1
*	81-4270	Choke Shaft Assembly (Incl. Ref. #5 -7)	1
*	81-5650	Carburetor Repair Kit (Incl. Ref. #1, 9, 23, 26, 29 & 30)	1
*	81-5590	Carburetor Assembly (Incl. Ref. #2-32)	1
*	81-5820	Needle & Seal Kit (Incl. Valve Seat & Ref. #29)	1

*Not Illustrated

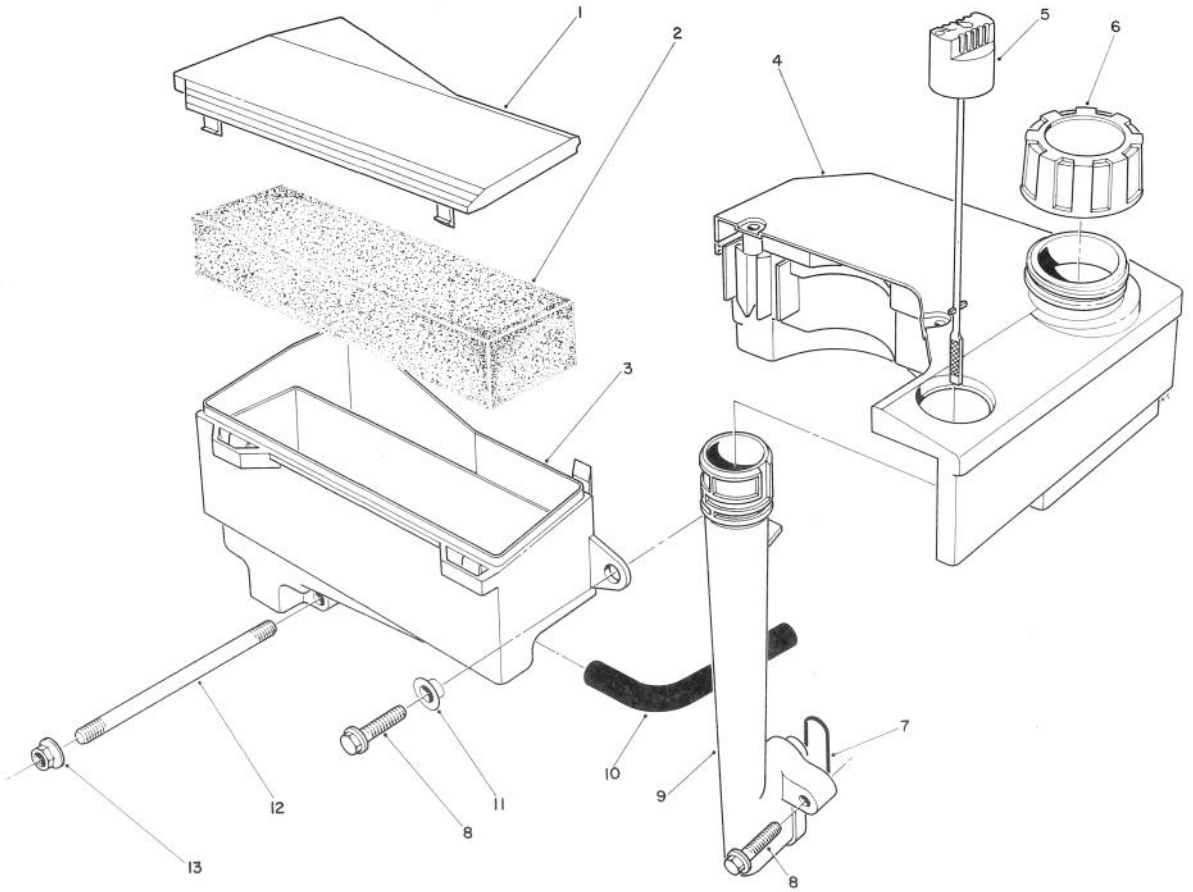

C-0161

AIR CLEANER & FUEL TANK ASSEMBLY (MODEL NO. VML0-5)

Ref. No.	Part No.	Description	No. Used
1	81-4110	Cover - Air Cleaner	1
2	81-4120	Filter - Foam	1
3		Body - Air Cleaner	1
4	55-3530	Tank - Fuel	1
5	81-4140	Dipstick - Oil	1
6	55-3570	Cap - Gas	1
7	81-4150	Seal - Oil Tube	1
8	81-4160	Bolt	3

Ref. No.	Part No.	Description	No. Used
9	81-4170	Tube - Oil Fill	1
10	81-4180	Hose - Crankcase Breather	1
11	81-4200	Spacer	1
12	81-4220	Stud - Carburetor	2
13	50-7180	Nut	2
*	81-4240	Air Cleaner Assembly (Incl. Ref. #1 & 3)	1

*Not Illustrated

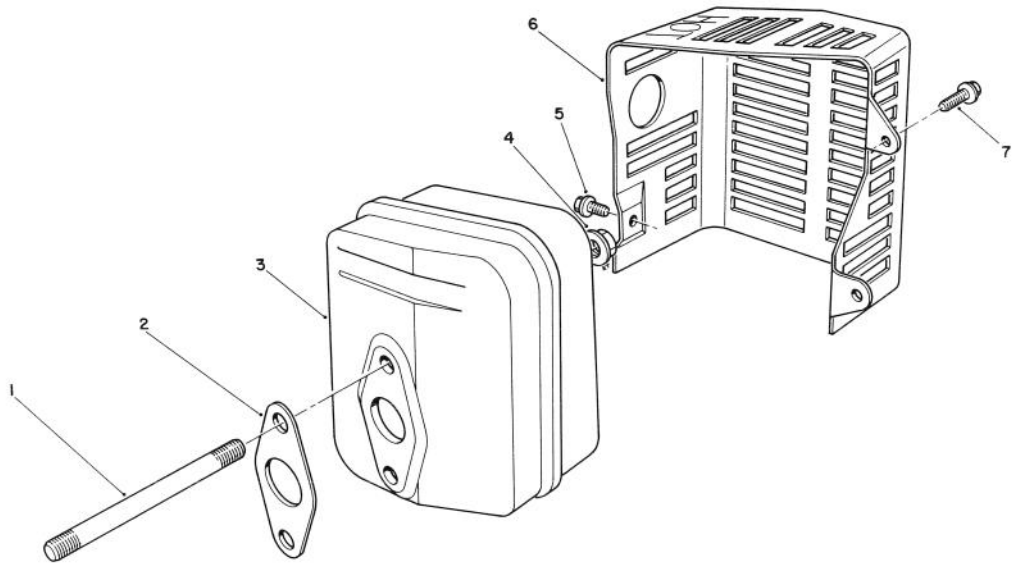

T-0726

MUFFLER ASSEMBLY (MODEL NO. VML0-5)

Ref. No.	Part No.	Description	No. Used
1	81-4380	Stud - Muffler	2
2	81-4390	Gasket - Muffler	1
3	81-4400	Muffler	1
4	50-0530	Nut	2
5	81-4420	Screw	1
6	81-4430	Cover - Muffler	1
7	81-1170	Bolt	2
*	56-6730	Spark Arrester Kit (Incl. Ref. #2) Optional	1

*Not Illustrated

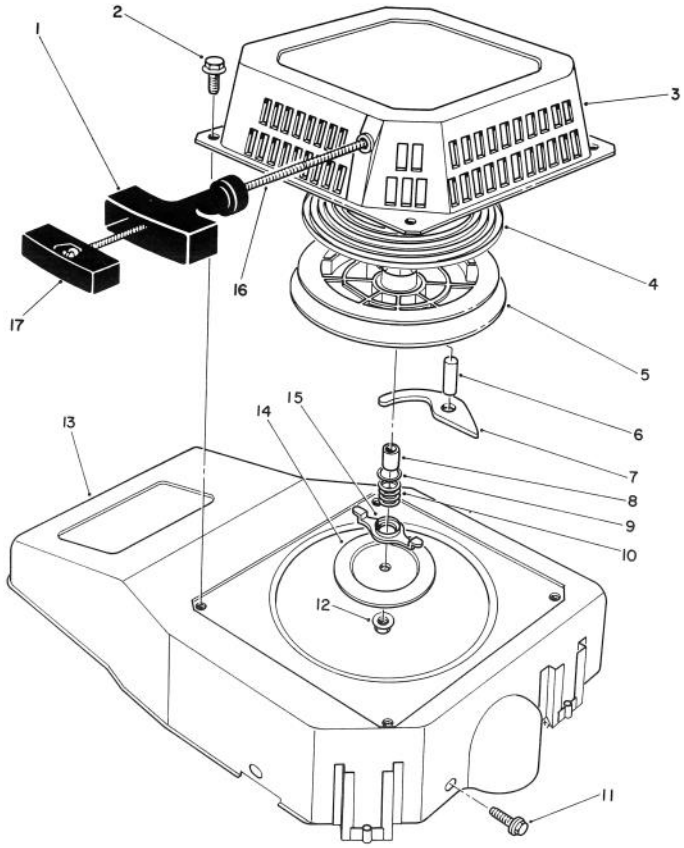

C-0162

RECOIL ASSEMBLY (MODEL NO. VML0-5)

Ref. No.	Part No.	Description	No. Used
1	81-4000	Handle	1
2	81-1280	Bolt	4
3	81-3970	Case - Recoil	1
4	81-4010	Spring - Recoil	1
5	81-4020	Reel - Rope Pulley	1
6	81-4030	Pin	1
7	81-4040	Pawl	1
8	81-4050	Spacer	1
9	81-4060	Washer	1
10	81-4070	Spring - Friction	1

Ref. No.	Part No.	Description	No. Used
11	81-1170	Bolt	3
12	81-4100	Nut - Lock	1
13	81-3960	Shroud - Blower	1
14	81-4090	Plate - Friction	1
15	81-4080	Guide - Pawl	1
16	81-1270	Rope - Recoil	1
17	81-4960	Retainer - Rope	1
*	81-3270	Recoil Starter Assembly (Incl. Ref. #1, 3-10, 12-15 & 17)	1

*Not Illustrated

Litho in U.S.A.

AL-914715

PRODUCT CHANGES

In an effort to make improvements available to TORO owners as quickly as possible, minor changes are incorporated into Toro's products from time to time that do not become immediately shown in the Parts Catalog. If such a change has been made in your unit, which is not reflected in your manual, see your TORO Distributor or his Authorized TORO Service Dealer for information and part numbers.

COUNTRIES OTHER THAN THE UNITED STATES OR CANADA

Customers who have purchased TORO products exported from the United States or Canada should contact their Toro Distributor (Dealer) to obtain guarantee policies for your country, province or state. If for any reason you are dissatisfied with your Distributor's service or have difficulty obtaining guarantee information, contact the TORO importer. If all other remedies fail, you may contact us at The Toro Company.

MAINTENANCE RECORD

Date								

Compliance with Radio Interference Regulations Certified.
Certifie Conforme au Reglement sur le Brouillage Radioelectrique.

Litho in U.S.A.