Form Number 3358-554 Rev A

622R Power Throw®
Snowthrower

Model No. 38606 - 280000001 and up.

Parts Catalog

Ordering Replacement Parts

To order replacement parts, please supply the part number, the quantity, and the description of each part desired.

Understanding Reference Numbers

Each Identified part in an illustration has a reference number. The reference number for a part also appears in the parts list, along with other information about the part.

This catalog uses two special reference number formats, one to indicate parts in a service assembly and another to indicate the quantity of a given part in an illustration.

Service Assembly Reference Numbers

Parts in service assemblies have reference numbers in the form a:b. The a represents the reference number of the entire service assembly and the b represents a sequential number unique to each part within the service assembly.

For example, a wheel assembly might be identified by reference number 6, the tire by 6:1, the valve by 6:2, and the wheel by 6:3. When you order the assembly identified by reference number 6, you receive all parts identified by reference numbers 6:1, 6:2, and 6:3. However, you may also order any part individually. Reference numbers of this type appear in illustrations and in part lists.

Reference Numbers Indicating Quantity

In an illustration, if a reference number indicates more than one part, the reference number has the form nX y. The n represents the quantity of the part, the X is the multiplication symbol, and the y represents the reference number.

For example, in an illustration, the reference number 2X 37 means that two of the parts identified by reference number 37 are indicated.

© The Toro Company - 2007
All Rights Reserved

Register your product at www.Toro.com

Contents

Description	Page
Auger Housing Assembly	3
22 Inch Gear Case Assembly No. 37-6962	4
Frame Assembly	5
Drive Assembly	6
Engine Assembly	7
Handle and Control Assembly	8
Control Assembly	9
Engine Assembly No. 1 Tecumseh OH195SA-72566G	10
Engine Assembly No. 2 Tecumseh OH195SA-72566G	12
Carburetor Assembly No. 640058A Tecumseh OH195SA-72566G	14
Rewind Starter No. 590749 Tecumseh OH195SA-72566G	15
Recoil Starter No. 590733 (Optional) Tecumseh OH195SA-72566G	16
Attachments and Accessories List	17

Part Description Abbreviations

Part descriptions in this catalog may include the following abbreviations.

AR. . . . . as required
ASM. . . . . assembly
BBC. . . . . blade brake clutch
CARR. . . . . carriage
DEG. . . . . degrees
EXT. . . . . external
FH. . . . . flat head
GA. . . . . gauge
HD. . . . . heavy-duty
HF. . . . . hex flange
HH. . . . . hex head
HHF. . . . . hex head flange
HHFTF. . . . . hex head flange thread forming
HJ. . . . . hex jam
HLH. . . . . hex lag head
HOC. . . . . height-of-cut
HSBH. . . . . hex socket button head
HSFH. . . . . hex socket flat head
HSH. . . . . hex socket head
HWH. . . . . hex washer head
HWHTF. . . . . hex washer head thread forming
HYD. . . . . hydraulic
LH. . . . . left hand
NI. . . . . nylon insert
NPTF. . . . . national pipe thread fine
PFH. . . . . phillips flat head
PPH. . . . . phillips pan head
PPHTF. . . . . phillips pan head thread forming
PRH. . . . . phillips round head
PTH. . . . . phillips truss head
PTO. . . . . power-take-off
RH. . . . . right hand
ROPS. . . . . roll-over protection system
SFH. . . . . slotted fillister head
SHH. . . . . slotted hex head
SHWH. . . . . slotted hex washer head
SPH. . . . . slotted pan head
SQH. . . . . square head
SRH. . . . . slotted round head
STD. . . . . standard
TAP. . . . . self tapping
TTH. . . . . torx truss head

Footnotes

❶ Not illustrated
❷ Not serviced separately
❸ Obtain from your local Tecumseh dealer
❹ Included in Repair Kit 632760
❺ Included in Gasket Set 36720

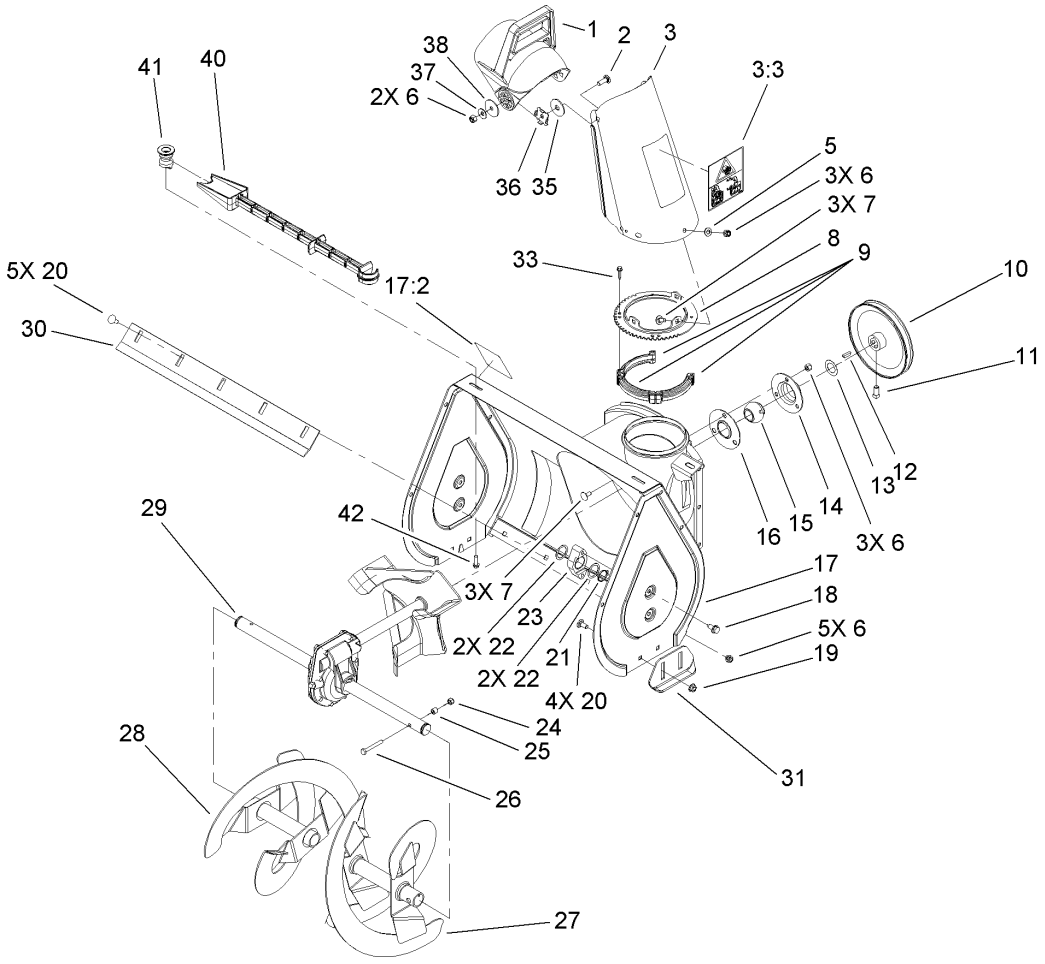

Auger Housing Assembly

Ref	Part No.	Qty.	Description
1	56-2680	1	Chute-Deflector
2	3230-22	2	Screw-CARR
3	112-6605	1	Chute ASM
3:3	112-6620	1	Decal-Danger, Discharge
5	3256-23	3	Washer-Flat
6	3296-29	13	Nut-Lock, NI
7	3230-18	6	Screw-CARR
8	37-8941-03	1	Ring-Chute
9	37-6490	3	Ring-Chute, Retainer
10	37-6890	1	Pulley
11	3242-4	2	Screw-Set, SQH
12	3257-23	1	Key-Woodruff
13	3-0737	1	Washer
14	26-6110	1	Flange-Cup, Bearing
15	63-3450	1	Bearing-Ball
16	26-6120	1	Flange-Cup, Bearing
17	112-6641	1	Auger Housing ASM
17:2	107-3040	1	Decal-Danger, Auger
18	32144-70	4	Screw-HWHTF
19	32128-20	4	Nut-HF
20	3230-1	9	Bolt-CARR
21	32151-36	2	Ring-Retaining
22	5-1550	4	Washer
23	37-6550	2	Bearing-Auger

Ref	Part No.	Qty.	Description
24	3296-42	2	Nut-Lock, NI
25	66-8010	2	Spacer-Hub, Impeller
26	321-11	2	Screw-HH
27	98-2271-03	1	Auger-LH
28	98-2270-03	1	Auger-RH
29	37-6962	1	22 Inch Gear Case ASM
30	100-3554-01	1	Blade-Scraper
31	40-8160-01	2	Skid
33	27-0220	6	Screw-Special
35	20-4320	2	Washer-Rubber
36	55-8950	2	Plate-Friction
37	3290-456	2	Washer-Belleville
38	3256-68	2	Washer-Flat
40	110-3408	1	Stick-Cleanout
41	110-6275	2	Holder-Stick
42	46-8091	2	Screw-HWH

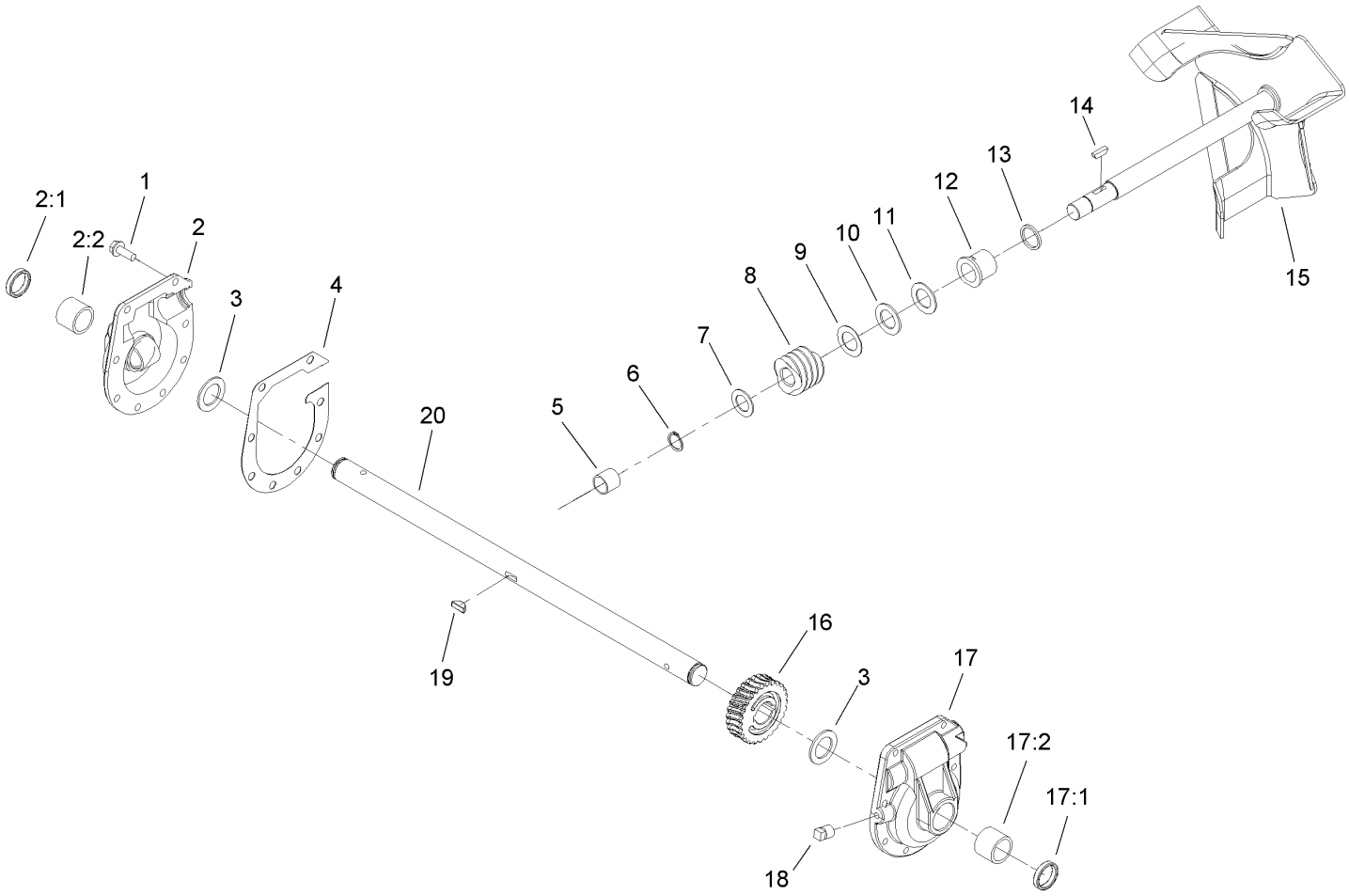

22 Inch Gear Case Assembly No. 37-6962

Ref	Part No.	Qty.	Description
1	32144-41	8	Screw-Taptite
2	14-2449	1	RH Bushing Case ASM
2:1	7-0045	1	Seal-Oil
2:2	112-6635	1	Bushing-Sleeve
3	252-71	2	Washer-Thrust
4	51-0460	1	Gasket-Case, Gear
5	256-32	1	Bushing
6	32120-72	1	Ring-Snap
7	3-8664	1	Washer-Thrust
8	5-7170	1	Gear
9	252-80	1	Washer-Thrust
10	252-76	1	Bearing-Thrust
11	257-3	1	Washer-Thrust
12	37-6560	1	Bushing-Input
13	237-87	1	Ring-Quad
14	3257-23	1	Key-Woodruff
15	37-6990-03	1	Impeller Shaft ASM
16	5-7180	1	Gear-Worm, 27T
17	14-2459	1	LH Bushing Case ASM
17:1	7-0045	1	Seal-Oil
17:2	112-6635	1	Bushing-Sleeve
18	281-1	1	Plug-Pipe, SQH
19	3257-33	1	Key-Woodruff
20	37-6802	1	Shaft-Auger

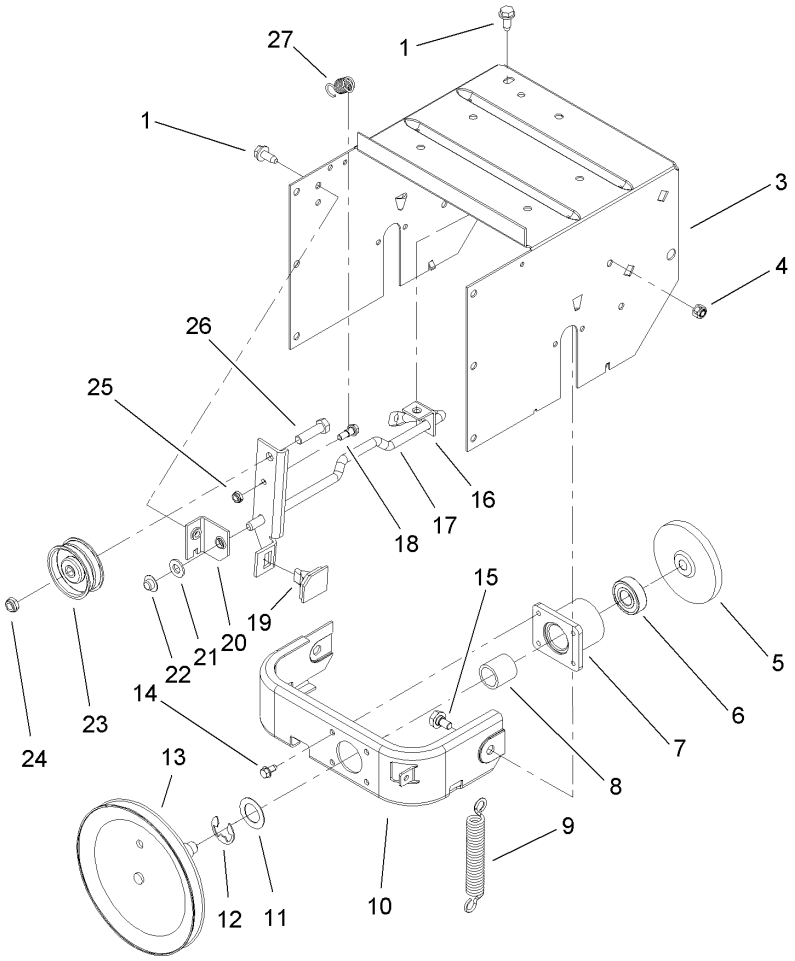

Frame Assembly

Ref	Part No.	Qty.	Description
1	32144-70	2	Screw-HWHTF
3	37-8900-01	1	Frame-Traction
4	3296-29	2	Nut-Lock, NI
5	38-0800	1	Plate-Friction
6	100-1048	1	Bearing-Ball
7	88-0560	1	Hub-Frame, Traction
8	256-322	1	Bushing
9	37-8870	1	Spring-Plate, Friction
10	88-0550-03	1	Frame-Front
11	252-80	1	Washer-Thrust
12	32151-103	1	Ring-Snap
13	88-0850	1	Pulley And Drive ASM
14	32144-4	4	Screw-HWH
15	37-8770	2	Bolt-Shoulder
16	37-9070	1	Bracket-Mount, Rear
17	40-6511-03	1	Auger Clutch Rod ASM
18	42-3560	1	Bolt-Shoulder
19	66-8060	1	Pad-Brake
20	66-6790	1	Bracket-Mount, Front
21	3256-24	1	Washer-Flat
22	3290-320	1	Retainer-Push On
23	3-4244	1	Pulley-Idler
24	3296-59	1	Nut-Lock, NI
25	3296-56	1	Nut-Lock, NI

Ref	Part No.	Qty.	Description
26	323-29	1	Screw-HH
27	53-7570	1	Spring

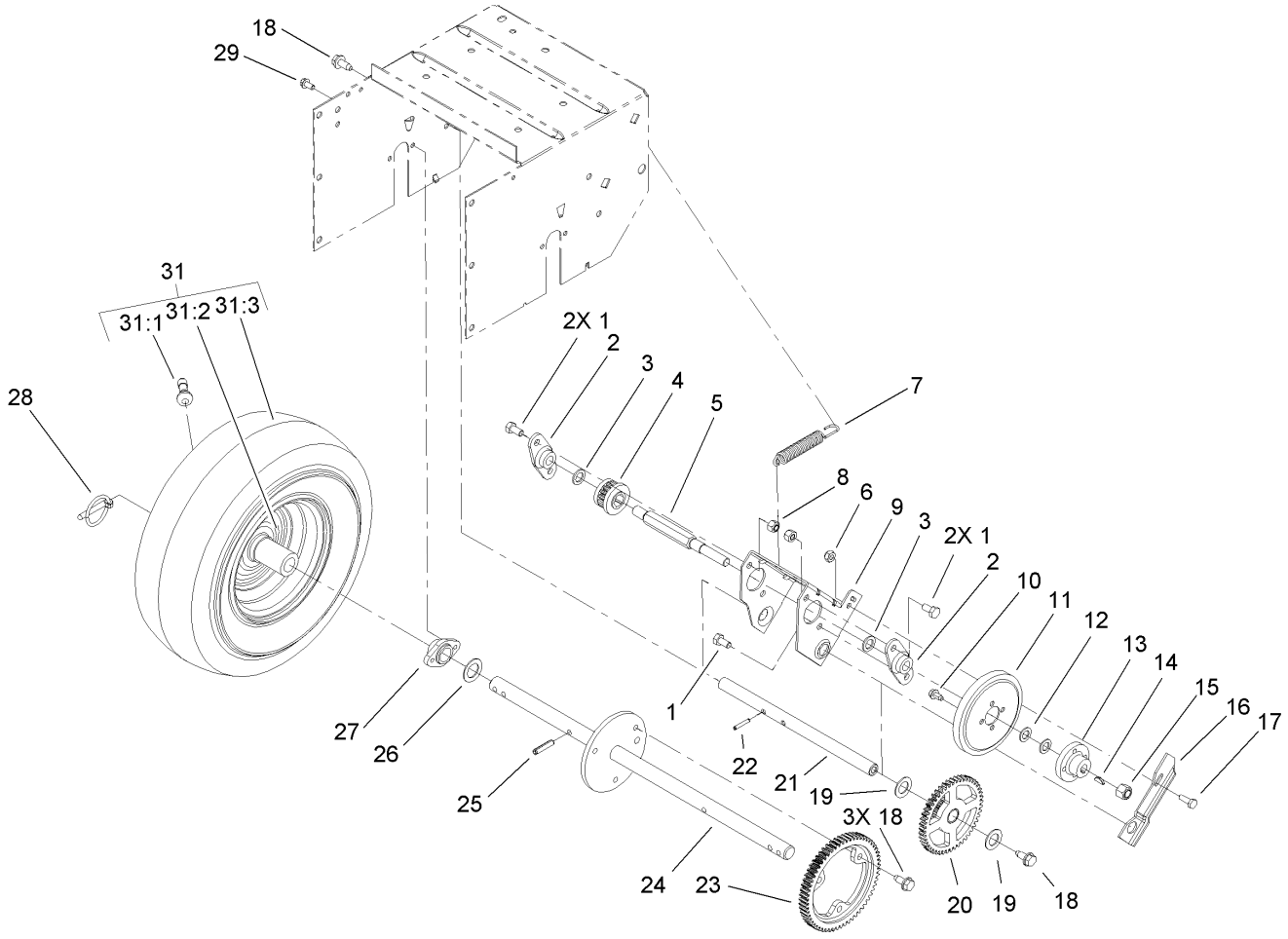

Drive Assembly

Ref	Part No.	Qty.	Description
1	322-2	4	Screw-HH
2	20-1620	2	Bearing-Wheel, Friction
3	5-7570	2	Washer-Flat
4	37-6500	1	Pinion
5	37-6780	1	Shaft-Wheel, Friction
6	3296-16	1	Nut-Lock, NI
7	37-8880	1	Spring-Traction
8	3296-29	4	Nut-Lock, NI
9	39-1230	1	Bracket-Sliding
10	32144-4	4	Screw-HWH
11	37-6570	1	Wheel-Friction
12	36-4790	2	Washer-Thrust
13	39-1520	1	Hub-Wheel, Friction
14	3257-24	1	Key-Woodruff
15	3296-48	1	Nut-Lock, NI
16	39-1250	1	Cam-Receiver
17	321-4	1	Screw-HH
18	32144-70	5	Screw-HWHTF
19	10-9280	2	Washer-Special
20	37-9160	1	Internal Gear And Bushing ASM
21	37-6760	1	Shaft-Pivot
22	32121-45	2	Pin-Spring
23	37-6520	1	Gear-Axle
24	74-1350	1	Shaft-Axle

Ref	Part No.	Qty.	Description
25	32121-9	2	Pin-Roll, Slotted
26	3-8664	2	Washer-Thrust
27	37-6850	2	Bearing-Axle
28	3290-243	2	Pin-Lynch
29	32144-4	4	Screw-HWH
❶❷30		1	LH Wheel And Tire ASM
❶30:1	232-27	1	Stem-Valve
❶30:2	241-131	1	Rim-Wheel
❶30:3	112-6609	1	Tire
❷31		1	RH Wheel And Tire ASM
31:1	232-27	1	Stem-Valve
31:2	241-131	1	Rim-Wheel
31:3	112-6609	1	Tire

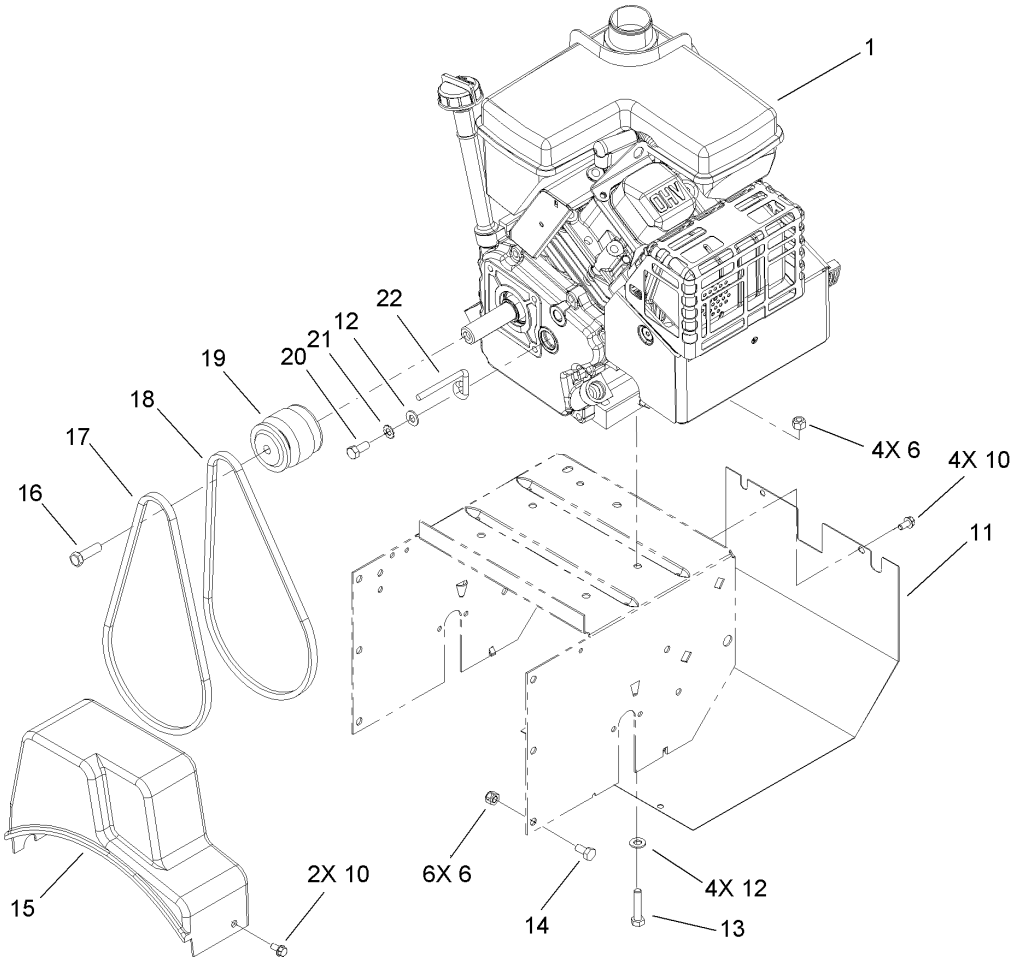

Engine Assembly

Ref	Part No.	Qty.	Description
❷❸1		1	Engine-Tecumseh, Oh195Sa-72566G
6	3296-29	10	Nut-Lock, NI
10	32144-4	6	Screw-HWH
11	37-6830-01	1	Cover-Traction, Lower
12	3256-23	5	Washer-Flat
13	322-7	4	Screw-HH
14	322-2	6	Screw-HH
15	37-6900	1	Cover-Belt
16	43-7290	1	Screw-Special
17	26-9672	1	V-Belt
18	37-9090	1	V Belt-3L, Traction
19	74-1370	1	Pulley-Engine
20	3210-3	1	Screw-HH
21	3255-8	1	Washer-Lock
22	37-8990	1	Retainer-Belt

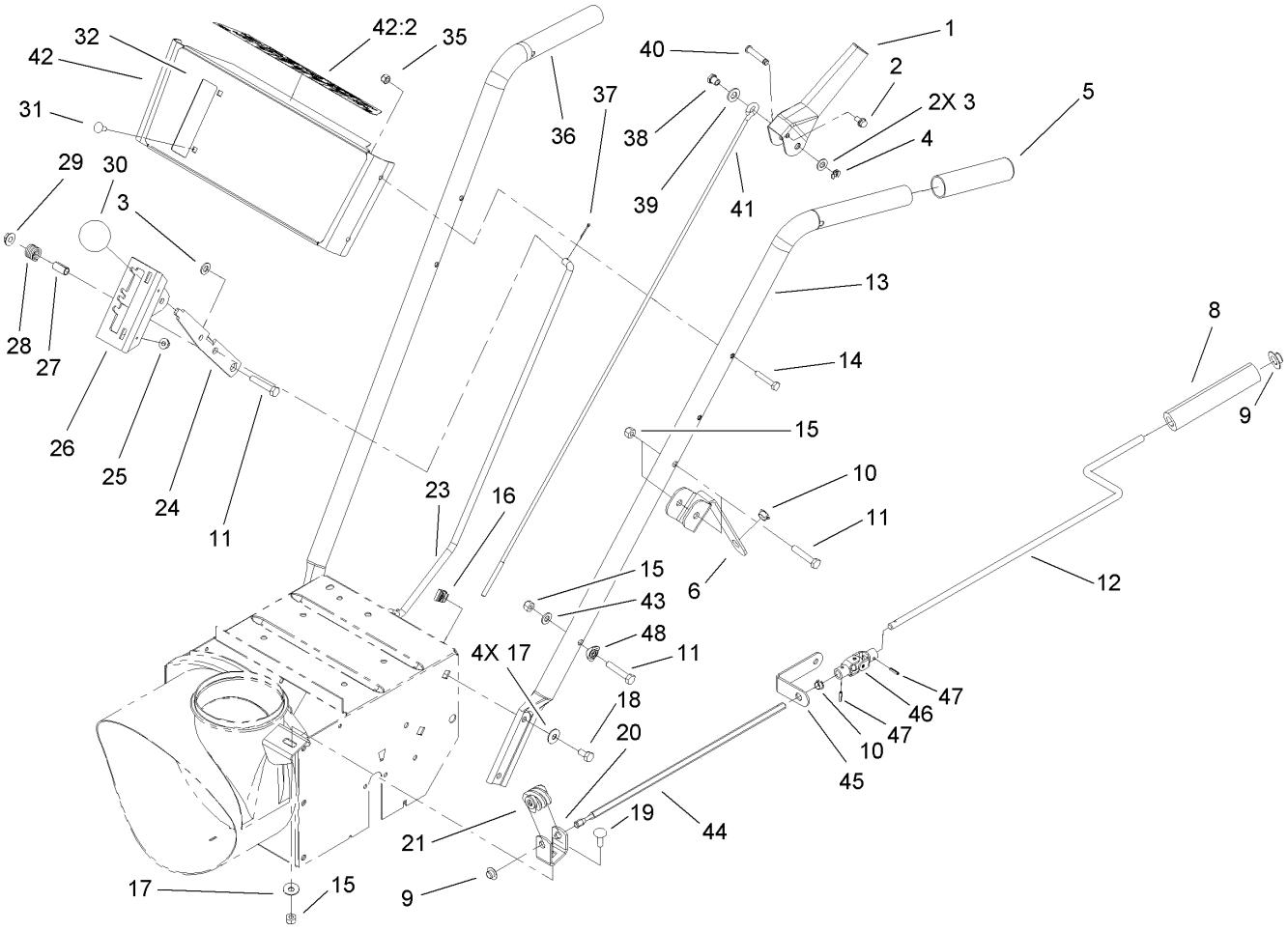

Handle and Control Assembly

Ref	Part No.	Qty.	Description
1	94-8887-03	2	Handle-Control
2	3234-13	2	Screw-HHF
3	3256-23	3	Washer-Flat
4	32151-73	2	Ring-Clip
5	112-6615	2	Grip-Handle
6	110-6297	1	Bracket-Rod, Upper Chute
8	40-8230	1	Grip-Control, Chute
9	3290-320	2	Retainer-Push On
10	256-249	2	Bushing
11	322-9	3	Screw-HH
12	110-6293	1	Rod-Chute, Upper
13	110-6296-03	1	Handle-Left
14	321-9	4	Screw-HH
15	3296-29	3	Nut-Lock, NI
16	3290-196	4	Nut
17	3290-456	5	Washer-Belleville
18	322-2	4	Screw-HH
19	3230-22	1	Screw-CARR
20	110-6298	1	Bracket-Worm
21	40-8250	1	Gear-Worm, Chute
23	39-7570	1	Rod-Selector, Speed
24	37-8820-03	1	Selector-Speed
25	32128-33	2	Nut-HF
26	39-1280-03	1	Mount-Selector, Speed

Ref	Part No.	Qty.	Description
27	40-8130	1	Spacer
28	37-9150	1	Spring
29	32128-13	1	Nut-HF
30	233-21	1	Knob
31	3229-11	2	Screw-CARR
32	112-6638	1	Decal-Escutcheon
35	3296-42	4	Nut-Lock, NI
36	52-5561-03	1	Handle-Right
37	3272-4	1	Pin-Cotter
38	47-4990	2	Post-Mounting, Linkage
39	3256-24	2	Washer-Flat
40	52-5600	2	Pin-Lever, Control
41	52-5590	2	Link-Upper
42	112-6643	1	Escutcheon Panel ASM
42:2	112-6624	1	Decal-Escutcheon, Back
43	3256-23	1	Washer-Flat
44	110-6292	1	Rod-Chute, Lower
45	110-6295	1	Bracket-Rod, Lower
46	94-2686	1	Joint-Universal
47	32121-73	2	Pin-Roll
48	107-3844	1	Washer

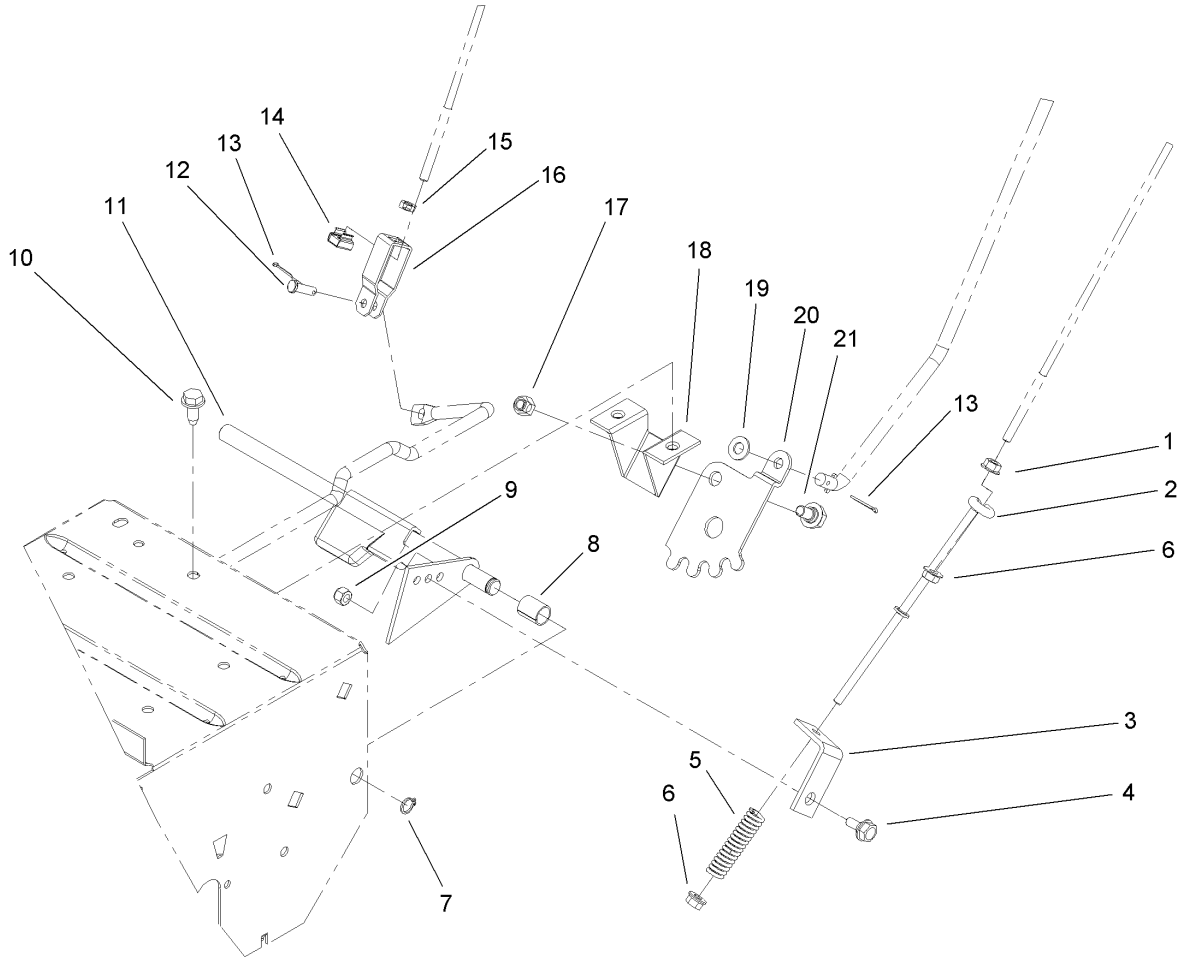

Control Assembly

Ref	Part No.	Qty.	Description
1	32128-33	1	Nut-HF
2	39-3060	1	Rod-Traction, Lower
3	38-4490	1	Bracket-Traction
4	40-8350	1	Screw
5	38-4520	1	Spring
6	32128-32	2	Nut-HHF
7	32151-61	1	Ring-Retaining
8	40-9680	1	Spacer
9	3296-42	1	Nut-Lock, NI
10	32144-70	2	Screw-HWHTF
11	43-7310-03	1	Traction Arm ASM
12	1-808265	1	Pin-Clevis
13	3272-4	2	Pin-Cotter
14	32115-5	1	Nut-Retained
15	3218-1	1	Nut-Jam
16	39-3080	1	Clevis
17	3296-29	1	Nut-Lock, NI
18	37-8790	1	Mount-Lever
19	3256-23	1	Washer-Flat
20	37-8800	1	Gear-Quadrant
21	37-8770	1	Bolt-Shoulder

Engine Assembly No. 1
Tecumseh OH195SA-72566G

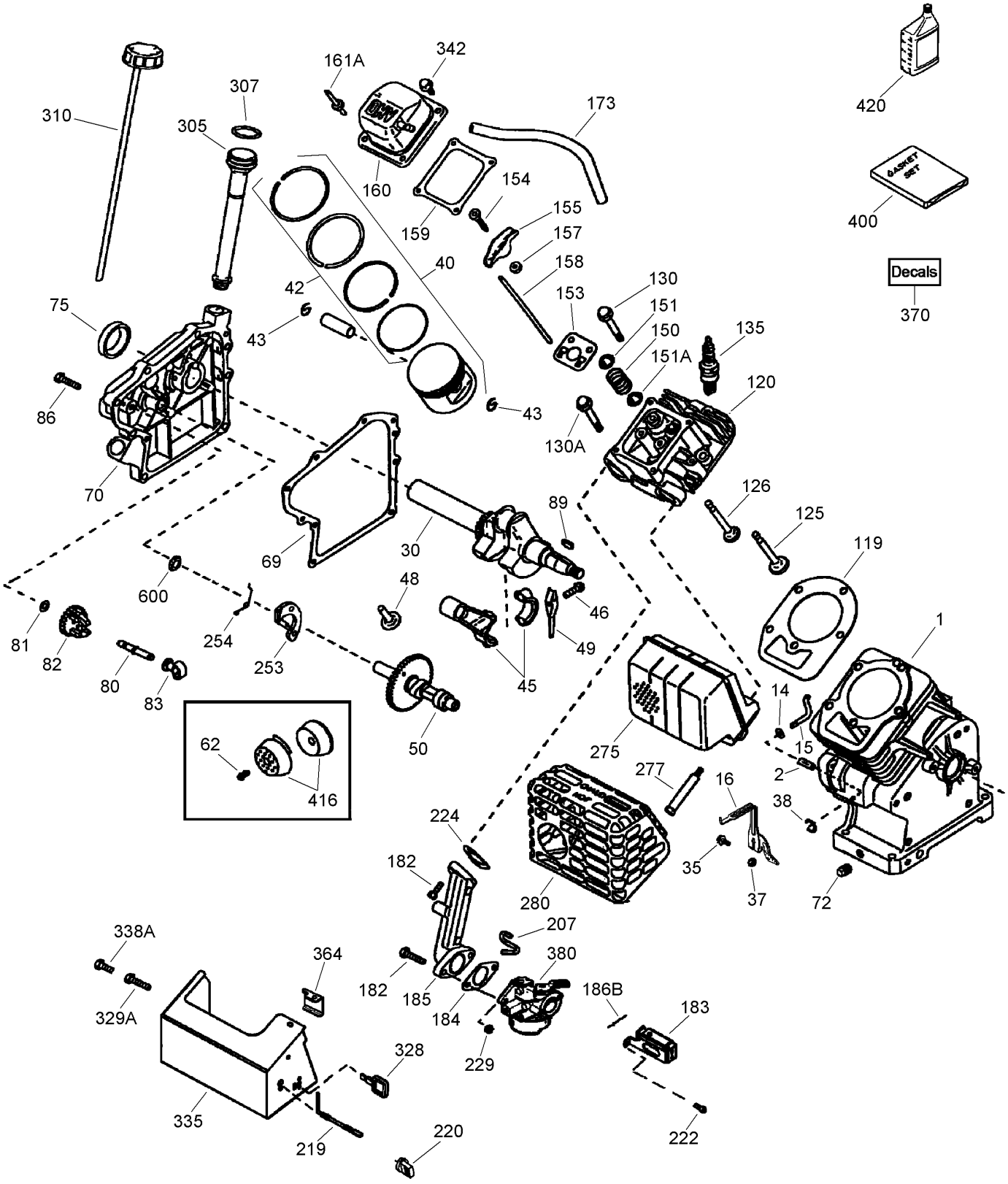

Engine Assembly No. 1
Tecumseh OH195SA-72566G

Ref	Part No.	Qty.	Description
❸1	37120B	1	Cylinder ASM (Including 2, 20, 72, 72A, 325 And 325A)
❸2	26727	2	Pin-Dowel
❸14	651052	1	Washer
❸15	37108	1	Rod-Governor (Including 38)
❸16	37110	1	Lever-Governor
❸30	34740	1	Crankshaft ASM
❸35	651053	1	Screw (T-25, 10-32 X 63/64)
❸37	651116	1	Nut-Square
❸38	37109	1	Ring-Retaining
❸40	40004	1	Piston, Pin And Ring Set (STD)
❸40	40005	1	Piston, Pin And Ring Set (.010 O S)
❸42	40006	1	Ring Set (STD)
❸42	40007	1	Ring Set (.010 O S)
❸43	20381	2	Ring-Retaining, Piston Pin
❸45	32875A	1	Connecting Rod ASM (Including 46 And 49)
❸46	32610A	2	Bolt-Rod, Connecting
❸48	35616A	1	Lifter-Valve
❸49	36611	1	Dipper-Oil
❸50	37040	1	Camshaft (Including 150, 253 And 254)
❸62	650760	1	Screw (8-32 X 3/8)
❸❺69	36624	1	Gasket-Cover, Cylinder
❸70	36625	1	Cover-Cylinder (Includes 75 Thru 83)
❸72	27642	3	Plug-Drain, Oil (SQH 1/4-18)
❸75	27897	1	Seal-Oil
❸80	30574A	1	Shaft-Governor
❸81	30590A	1	Washer-Flat
❸82	30591	1	Governor Gear ASM
❸83	36057	1	Spool-Governor
❸86	650488	8	Screw (1/4-20 X 1-1/4)
❸89	610961	1	Key-Flywheel (Also Available In Packaged Part 740007B)
❸❺119	36719	1	Gasket-Head, Cylinder
❸120	37474	1	Head-Cylinder (Includes 151A)
❸125	36471	1	Valve-Exhaust (STD) (Includes 151)
❸125	36472	1	Valve-Exhaust (1/32 Os) (Includes 151)
❸126	37711	1	Valve-Intake (STD) (Includes 151 And 151A)
❸130	650912	4	Screw (5/16-18 X 1-1/2)
❸130A	650999	1	Screw (5/16-18 X 2-41/64)
❸135	34645	1	Spark Plug-Resistor (R N 4C)
❸150	37039	2	Spring-Valve
❸151	31673	2	Cap-Valve, Spring
❸151A	40016A	1	Seal-Valve, Intake
❸153	36649	1	Guide-Rod, Push
❸154	650913	2	Stud-Arm, Rocker
❸155	35624A	2	Arm-Rocker
❸157	650914	2	Nut (1/4-28)
❸158	36629	2	Rod-Push
❸❺159	35626	1	Gasket-Cover, Rocker Arm
❸160	36630B	1	Cover-Arm, Rocker
❸161A	651012	1	Stud
❸173	37676	1	Tube-Breather
❸182	650451	4	Screw (1/4-20 X 1)
❸183	36867	1	Bracket-Choke
❸❺184	26756	1	Gasket
❸185	36631	1	Pipe-Intake
❸186B	36652	1	Spring-Choke
❸207	36632	1	Link-Throttle
❸219	36868	1	Rod-Choke
❸220	35438	1	Knob-Control
❸222	28820	2	Screw (10-32 X 1/2)
❸❺224	36581	1	Gasket-Pipe, Intake
❸229	650852	4	Nut (1/4-20)
❸253	36701	1	Weight-Release, Compression
❸254	36702	1	Spring-Release, Compression
❸275	37595A	1	Muffler
❸277	650988	2	Screw (1/4-20 X 2-9/32)
❸280	37069	1	Shield-Heat
❸305	36877	1	Tube-Fill, Oil
❸307	35499	1	O-Ring
❸310	36878	1	Dipstick
❸328	35062	1	Key-Ignition (Also Available In Packaged Part 740077)
❸329A	651060	1	Screw (8-32 X 23/64)
❸335	36873A	1	Cover-Carburetor
❸338A	28942	1	Screw (10-32 X 3/8)
❸342	651008	9	Screw (1/4-20 X 31/64)
❸364	36872	1	Bracket-Cover, Carburetor
❸370	36899	1	Decal - Speed Control, Choke And Key
❸370	36534A	1	Instruction Decal - Caution - Read Owner's Manual
❸370	36501	1	Decal-Primer-International Symbol
❸370	36695	1	Decal-Tecumseh Logo For Top Of Recoil Starter
❸370	37948	1	Decal - Hot Surfaces
❸380	640058A	1	Carburetor ASM (Includes 184)
❸400	36720	1	Gasket Set
❸416	36085	1	Spark Arrestor Kit (Includes 151)
❸420	730226A	0	Oil-Engine, S A E 5W30
❸600	651013	1	Washer
❶❸708	907366A	1	Engine Replacement
❶❸709	754300C	1	Short Block Replacement
❶❸999	730286	1	Winter Maintenance Kit (Includes 5W30 Oil)
❶❸999	730296	1	Winter Maintenance Kit (Includes 0W30 Synthetic Oil)

Engine Assembly No. 2
Tecumseh OH195SA-72566G

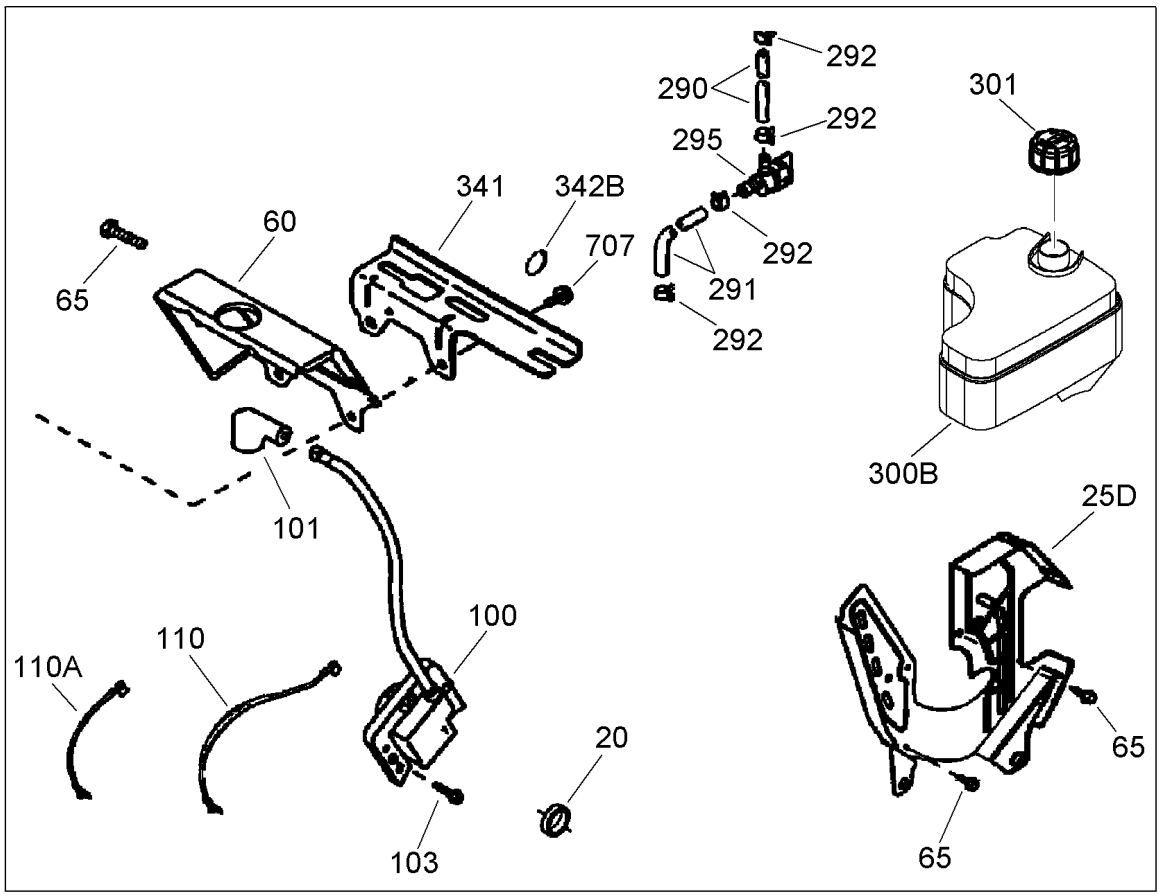

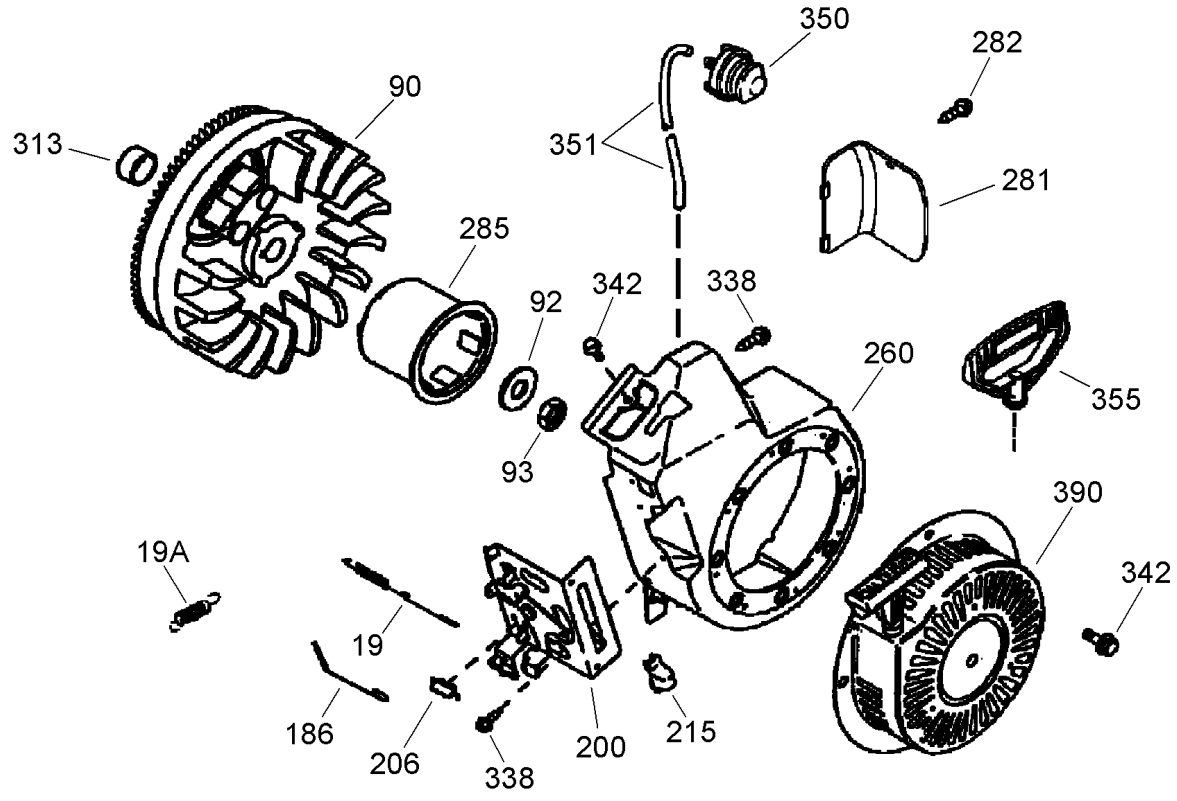

Engine Assembly No. 2
Tecumseh OH195SA-72566G

Ref	Part No.	Qty.	Description
❸19	37111	1	Spring-Throttle
❸19A	36750	1	Spring-Governor
❸20	32600	1	Seal-Oil
❸25D	37710	1	Baffle-Air (1 Piece, Electric Start)
❸60	36623A	1	Extension-Housing, Blower
❸65	30200	3	Screw (10-24 X 9/16)
❸90	611205	1	Flywheel
❸92	650815	1	Washer-Belleville
❸93	650816	1	Nut-Flywheel
❸100	34443C	1	Ignition-Solid State
❸101	610118	1	Cover-Spark Plug
❸103	651007	2	Screw (T-15, 10-24 X 15/16)
❸110	36230	1	Wire-Ground (Green, 9.0)
❸110A	36874	1	Wire-Ground (Green, 5.5)
❸186	36711	1	Link-Governor
❸200	36824A	1	Bracket-Control (Includes 206 And 215)
❸206	610973	2	Terminal
❸215	32410	1	Knob-Control
❸260	36901	1	Housing-Blower
❸281	36907A	1	Cover-Bubble, Starter
❸282	651035	1	Screw (6-32 X 25/64)
❸285	35985C	1	Cup-Starter
❸290	37963	1	Line-Fuel, Low Permeation (16.0)
❸291	37962	1	Line-Fuel, Low Permeation (8.62)
❸292	26460	4	Clamp-Line, Fuel
❸295	35857	1	Valve-Shut-Off, Fuel (Includes 292) (Also Available In Packaged Part 740073)
❸300B	37048	1	Fuel Tank ASM (Includes 292 And 301) 3.5 Quart
❸301	37845	1	Cap-Fuel (Red Plastic) (1-1/2 Id)
❸313	34080	1	Spacer
❸338	650821	8	Screw (10-32 X 1/2)
❸341	36644A	1	Bracket-Tank, Fuel
❸342	651008	9	Screw (1/4-20 X 31/64)
❸342B	651086	2	Washer-Rubber
❸350	570682A	1	Primer ASM (Also Available In Packaged Part 740101)
❸351	32180C	1	Line-Primer
❸355	590574	1	Handle-Starter, Mitten Grip (Also Available In Packaged Part 740053B)
❸390	590749	1	Starter-Rewind
❸707	651085	2	Screw (1/4-20 X 19/32)

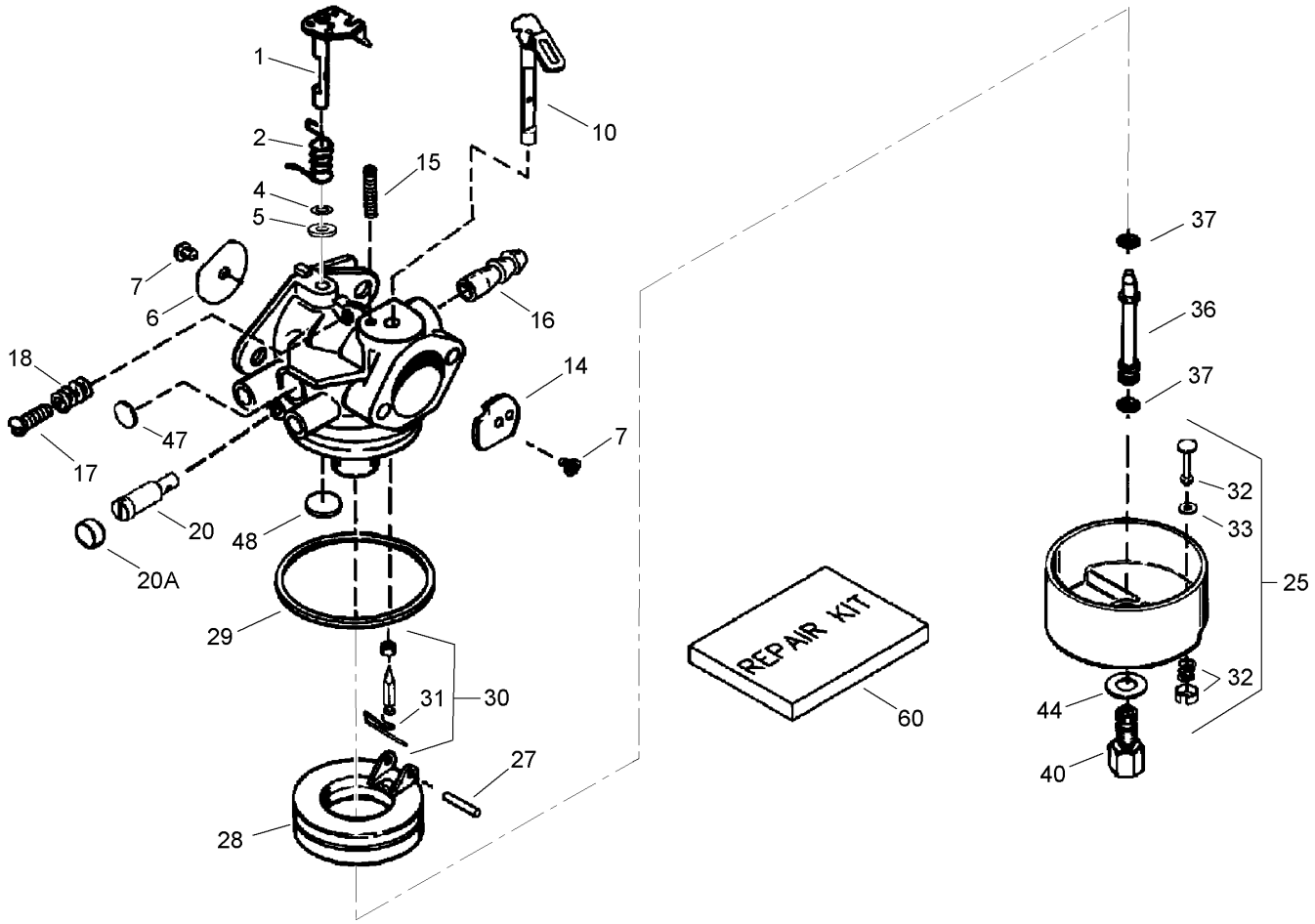

Carburetor Assembly No. 640058A
Tecumseh OH195SA-72566G

Ref	Part No.	Qty.	Description
❸0	640058A	1	Carburetor ASM
❸1	631615	1	Throttle Shaft And Lever ASM
❸2	631767	1	Spring-Return, Throttle
❸❹4	631184	1	Washer-Seal, Dust
❸❹5	631183	1	Seal-Dust, Throttle
❸6	631036	1	Shutter-Throttle
❸❹7	650506	2	Screw-Shutter
❸10	632118	1	Choke Shaft And Lever ASM
❸14	631890	1	Shutter-Choke
❸15	630735	1	Spring-Positioning, Choke
❸16	632164	1	Fitting-Fuel
❸17	651025	1	Screw-Throttle Crack And Idle Speed
❸18	630766	1	Spring-Tension
❸20	640027	1	Screw-Restrictor, Idle
❸20A	640053	1	Cap-Screw, Idle Restrictor
❸25	631951	1	Float Bowl ASM
❸25	631867	1	Bowl-Float (No Drain)
❸❹27	631024	1	Shaft-Float
❸28	632802	1	Float (Plastic)
❸❹29	631028	1	O Ring-Bowl, Float
❸❹30	631021	1	Inlet Needle, Seat And Clip ASM
❸31	631022	1	Clip-Spring
❸32	27136A	1	Bowl Drain ASM

Ref	Part No.	Qty.	Description
❸33	27554	1	Gasket-Plunger, Drain
❸36	640019	1	Tube-Nozzle, Main
❸❹37	632547	2	O Ring-Nozzle Tube, Main
❸40	640059	1	Nut-Bowl, High Speed
❸❹44	27110A	1	Washer-Nut, Bowl
❸❹47	630748	1	Plug-Welch, Idle Mixture Well
❸❹48	631027	1	Plug-Welch, Atmospheric Vent
❸60	632760	1	Repair Kit

This illustratation may not depict actual equipment and is for reference purposes only

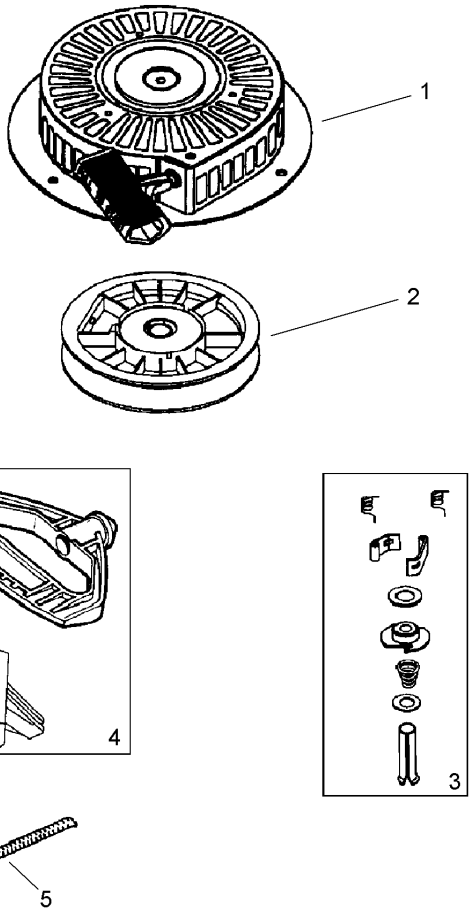

Rewind Starter No. 590749
Tecumseh OH195SA-72566G

Ref	Part No.	Qty.	Description
❸1	590749	1	Starter-Rewind
❸2	590682	1	Pulley And Rewind Spring ASM
❸3	590773	1	Repair Kit
❸4	590574	0	Handle-Starter, Mitten Grip (Also Available In Packaged Part #740053B)
❸5	590535	1	Rope-Starter (98 Cut To Length)

This illustratation may not depict actual equipment and is for reference purposes only

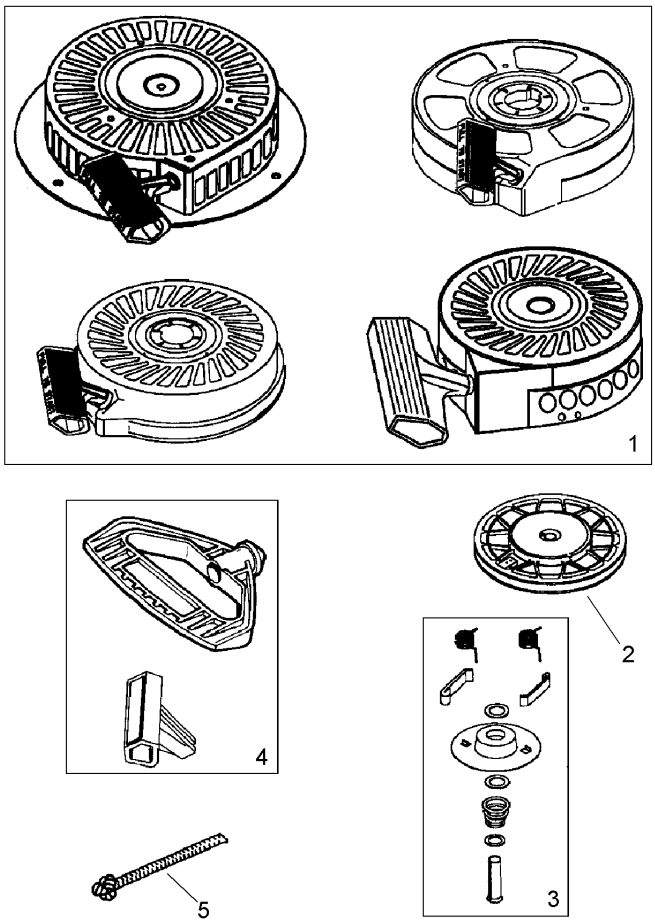

Recoil Starter No. 590733 (Optional)
Tecumseh OH195SA-72566G

Ref	Part No.	Qty.	Description
❸1	590733	1	Starter-Rewind
❸2	590709	1	Pulley And Rewind Spring ASM
❸3	590774	1	Repair Kit
❸4	590574	0	Handle-Starter, Mitten Grip (Also Available In Packaged Part #740053B)
❸5	590535	1	Rope-Starter (98 Cut To Length)

Attachments and Accessories

For 38606 - 622R Power Throw Snowthrower

Product Name	Model/Part
22 Inch Drift Breaker	37-7022
Tire Chain Kit	56-2700
Snow Cab	88-0600

NOTES

NOTES


TORO®