Form No. 3358-617 Rev A

Power Max® 6000 Snowthrower

Model No. 38610—Serial No. 270000001 and Up

Operator's Manual

Introduction

Read this information carefully to learn how to operate and maintain your product properly and to avoid injury and product damage. You are responsible for operating the product properly and safely.

You may contact Toro directly at www.Toro.com for product and accessory information, help finding a dealer, or to register your product.

Whenever you need service, genuine Toro parts, or additional information, contact an Authorized Service Dealer or Toro Customer Service and have the model and serial numbers of your product ready. Figure 1 identifies the location of the model and serial numbers on the product. Write the numbers in the space provided.

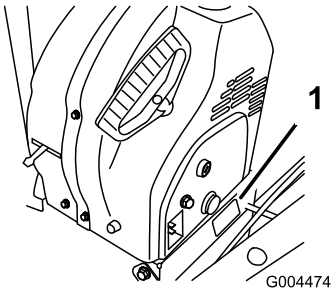

Figure 1

1. Model and serial number location

Model No. _____

Serial No. _____

This manual identifies potential hazards and has safety messages identified by the safety alert symbol (Figure 2), which signals a hazard that may cause serious injury or death if you do not follow the recommended precautions.



Figure 2

1. Safety alert symbol

This manual uses 2 words to highlight information. **Important** calls attention to special mechanical information and **Note** emphasizes general information worthy of special attention.

Important: The 2-stroke engine provided on this product meets the EPA Phase I Non-road Emissions regulations for engines under 19 kW. This product does not meet CARB TIER 1 regulations and cannot be sold in California.

Warning

CALIFORNIA
Proposition 65 Warning

The engine exhaust from this product contains chemicals known to the State of California to cause cancer, birth defects, or other reproductive harm.

This spark ignition system complies with Canadian ICES-002.

© 2007—The Toro® Company
8111 Lyndale Avenue South
Bloomington, MN 55420

Register at www.Toro.com.

Original Instructions (EN)
Printed in the USA
All Rights Reserved

Safety

Before Operating

- **Read and understand the contents of this manual before operating the snowthrower.**
- **Become familiar with all controls and know how to stop the engine quickly.**

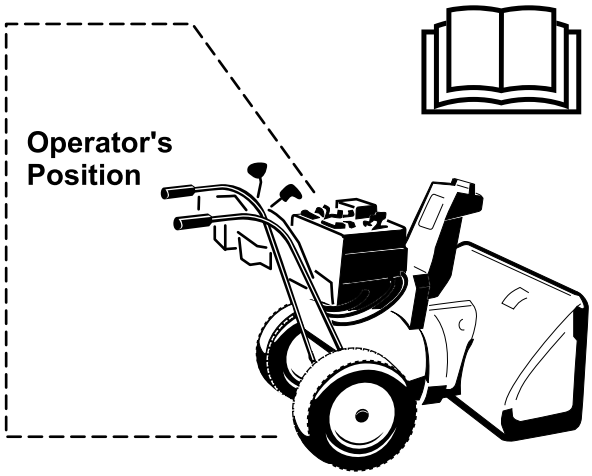

Caution: Improper use may result in loss of fingers, hands, or feet.

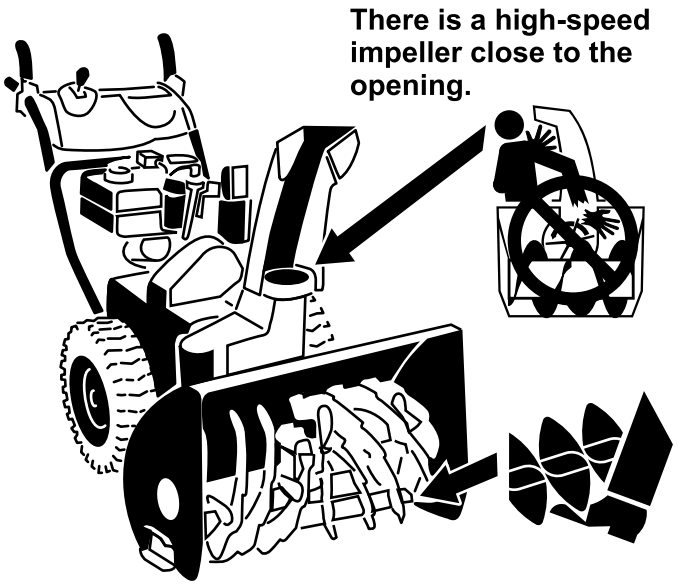

The low-speed auger has a moving pinch point close to the opening.

This snowthrower meets or exceeds the B71.3 specifications of the American National Standards Institute in effect at the time of production.

Read and understand the contents of this manual before the engine is ever started.

⚠This is the safety alert symbol. It is used to alert you to potential personal injury hazards. Obey all safety messages that follow this symbol to avoid possible injury or death.

Improperly using or maintaining this snowthrower could result in injury or death. To reduce this potential, comply with the following safety instructions.

Training

- Read, understand and follow all instructions on the machine and in the manual(s) before operating this unit. Be thoroughly familiar with the controls and the proper use of the equipment. Know how to stop the unit and disengage the controls quickly.
- Never allow children to operate the equipment. Never allow adults to operate the equipment without proper instruction.
- Keep the area of operation clear of all persons, particularly small children.
- Exercise caution to avoid slipping or falling, especially when operating the snow thrower in reverse.

Preparation

- Thoroughly inspect the area where the equipment is to be used and remove all doormats, sleds, boards, wires, and other foreign objects.
- Disengage all clutches and shift into neutral before starting the engine.
- Do not operate the equipment without wearing adequate winter garments. Avoid loose fitting clothing that can get caught in moving parts. Wear footwear that will improve footing on slippery surfaces.
- Handle fuel with care; it is highly flammable.
  - Use an approved fuel container.
  - Never add fuel to a running engine or hot engine.
  - Fill fuel tank outdoors with extreme care. Never fill fuel tank indoors.
  - Never fill containers inside a vehicle or on a truck or trailer bed with a plastic liner. Always

place containers on the ground, away from your vehicle, before filling.

  - When practical, remove gas-powered equipment from the truck or trailer and refuel it on the ground. If this is not possible, then refuel such equipment on a trailer with a portable container, rather than from a gasoline dispenser nozzle.
  - Keep the nozzle in contact with the rim of the fuel tank or container opening at all times, until refueling is complete. Do not use a nozzle lock-open device.
  - Replace gasoline cap securely and wipe up spilled fuel.
  - If fuel is spilled on clothing, change clothing immediately.
- Use extension cords and receptacles as specified by the manufacturer for all units with electric starting motors.
- Adjust the collector housing to clear gravel or crushed rock surface.
- Never attempt to make any adjustments while the engine is running (except when specifically recommended by manufacturer).
- Always wear safety glasses or eye shields during operation or while performing an adjustment or repair to protect eyes from foreign objects that may be thrown from the machine.

Operation

- Do not put hands or feet near or under rotating parts. Keep clear of the discharge opening at all times.
- Exercise extreme caution when operating on or crossing gravel drives, walks, or roads. Stay alert for hidden hazards or traffic.
- After striking a foreign object, stop the engine, remove the ignition key, thoroughly inspect the snow thrower for any damage, and repair the damage before restarting and operating the snow thrower.
- If the unit should start to vibrate abnormally, stop the engine and check immediately for the cause. Vibration is generally a warning of trouble.
- Stop the engine whenever you leave the operating position, before unclogging the auger/impeller housing or discharge chute, and when making any repairs, adjustments or inspections.
- When cleaning, repairing or inspecting the snow thrower, stop the engine and make certain the auger/impeller and all moving parts have stopped. Disconnect the spark plug wire and keep the wire away from the plug to prevent someone from accidentally starting the engine.
- Do not run the engine indoors, except when starting the engine and for transporting the snow thrower in or out of the building. Open the outside doors; exhaust fumes are dangerous.
- Exercise extreme caution when operating on slopes.
- Never operate the snow thrower without proper guards, and other safety protective devices in place and working.
- Never direct the discharge toward people or areas where property damage can occur. Keep children and others away.
- Do not overload the machine capacity by attempting to clear snow at too fast a rate.
- Never operate the machine at high transport speeds on slippery surfaces. Look behind and use care when operating in reverse.
- Disengage power to the auger/impeller when snow thrower is transported or not in use.
- Use only attachments and accessories approved by the manufacturer of the snow thrower (such as wheel weights, counterweights, or cabs).
- Never operate the snow thrower without good visibility or light. Always be sure of your footing, and keep a firm hold on the handles. Walk; never run.
- Never touch a hot engine or muffler.

Clearing a Clogged Discharge Chute

Hand contact with the rotating rotor blades inside the discharge chute is the most common cause of injury associated with snow throwers. Never use your hand to clean out the discharge chute. To clear the chute:

- **Shut the engine off!**
- Wait 10 seconds to be sure the rotor blades have stopped rotating.
- Always use a cleanout tool, not your hands.

Maintenance and Storage

- Check all fasteners at frequent intervals for proper tightness to be sure the equipment is in safe working condition.
- Never store the machine with fuel in the fuel tank inside a building where ignition sources are present such as hot water heaters, space heaters, or clothes

dryers. Allow the engine to cool before storing in any enclosure.

- Always refer to the *Operator's Manual* for important details if the snow thrower is to be stored for an extended period.
- Maintain or replace safety and instruction labels, as necessary.
- Run the machine a few minutes after throwing snow to prevent freeze-up of the rotor blades.

Toro Snowthrower Safety

The following list contains safety information specific to Toro products or other safety information that you must know.

- **Rotating auger/impeller can cut off or injure fingers or hands.** Stay behind the handles and away from the discharge opening while operating the snowthrower. **Keep your face, hands, feet, and any other part of your body or clothing away from moving or rotating parts.**
- Before adjusting, cleaning, inspecting, troubleshooting, or repairing the snowthrower, **stop the engine, remove the key, and wait for all moving parts to stop. Disconnect the wire from the spark plug and keep it away from the spark plug to prevent someone from accidentally starting the engine.**
- **Before** leaving the operating position, stop the engine, remove the key, and wait for all moving parts to stop.
- To unclog the discharge chute, stay in the operating position and release the left hand (traction) lever. While running the auger/impeller, push down on the handles to raise the front of the snowthrower a few inches (centimeters) off the pavement. Then lift the handles quickly to bump the front of the snowthrower on the pavement. Repeat if necessary until a stream of snow comes out the discharge chute.
- If you cannot unclog the discharge chute by bumping the front of the snowthrower, **stop the engine, wait for all moving parts to stop, and use the cleanout tool; never use your hand.**
- If a shield, safety device, or decal is damaged, illegible, or lost, repair or replace it before beginning operation.
- **Do not** smoke while handling gasoline.
- **Do not** use the snowthrower on a roof.
- Do not touch the engine while it is running or soon after it has stopped because the engine may be hot enough to cause a burn.
- Perform only those maintenance instructions described in this manual. Before performing any maintenance, service, or adjustment, stop the engine, remove the key, and disconnect the wire from the spark plug. If major repairs are ever needed, contact your Authorized Service Dealer.
- Do not change the governor settings on the engine.
- When storing the snowthrower for more than 30 days, drain the fuel from the fuel tank to prevent a potential hazard. Store fuel in an approved fuel container. Remove the key from the ignition switch before storing the snowthrower.
- Purchase only genuine Toro replacement parts and accessories.

Safety and Instructional Decals

Important: Safety and instruction decals are located near areas of potential danger. Replace damaged decals.

1



53-7670

1. Cutting/dismemberment of foot, auger



104-2767

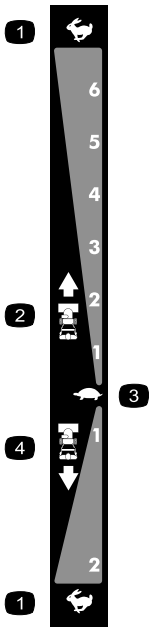

106-4525

Reorder part no. 112-6630

1. Fast
2. Forward speeds
3. Slow
4. Reverse speeds

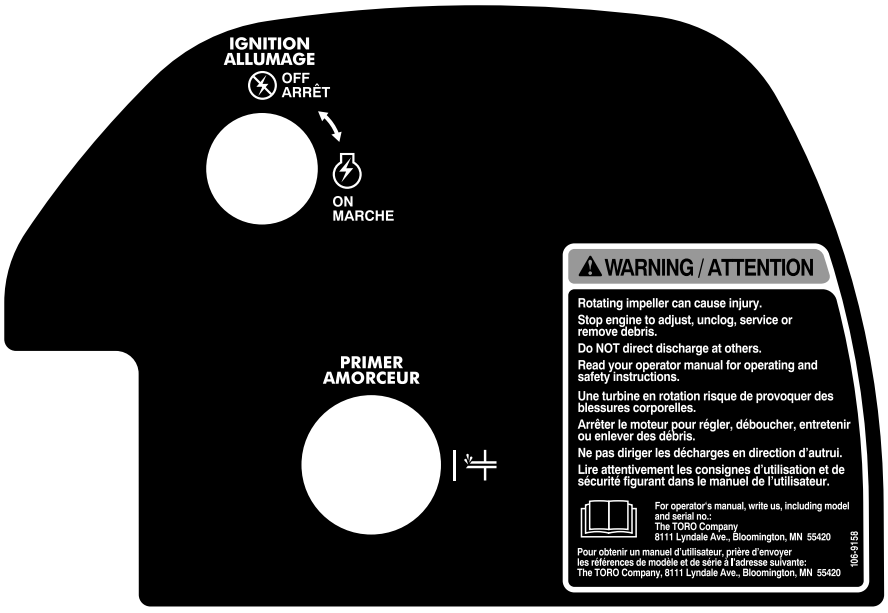

106-9158

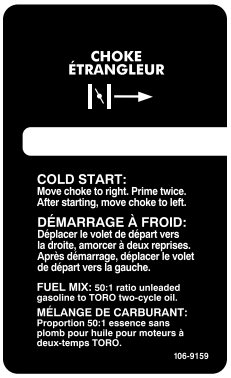

106-9159

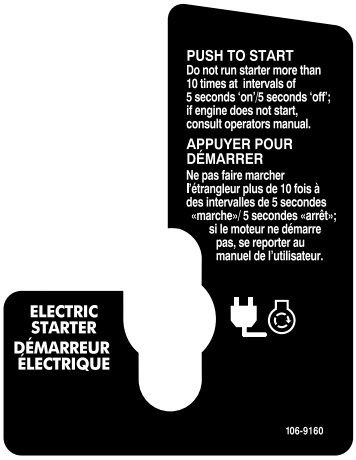

106-9160



107-4563

1. French translation of U.S. EPA decal text:
   Ce moteur est conforme à la réglementation antipollution Phase EPA relative aux moteurs ULGE.
   Famille : 4L4XS.1415BA
   Nº de modèle : 106-9133
   CYLINDREE (CC) : 141
   Pour plus de détails sur la sécurité, l'entretien et les réglages, reportez-vous au manuel de l'utilisateur. Nº de téléphone des services de vente et d'après-vente aux Etats-Unis : The Toro Company Bloomington, MN
   INFORMATION IMPORTANTE CONCERNANT LE MOTEUR

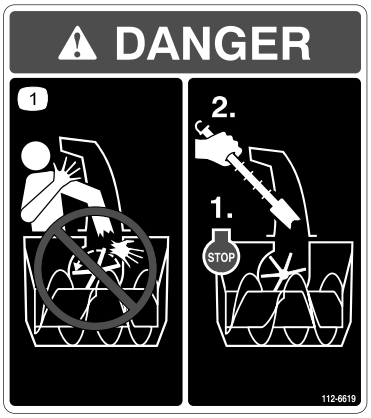

112-6619

Reorder part no. 112-6606

1. Do not place your hand in the chute; stop the engine before leaving the operator's position, use the tool clear the chute.



112-6623

1. Disengage
2. Wheel drive
3. Engage
4. Read the *Operator's Manual.*
5. Do not place your hand in the chute; stop the engine before leaving the operator's position, use the tool to clear the chute.
6. Thrown objects, keep bystanders a safe distance from the snowthrower.
7. Keep away from moving parts, remove the ignition key and read the instructions before servicing or performing maintenance.
8. Disengage
9. Auger drive
10. Engage

Setup

Loose Parts

Use the chart below to verify that all parts have been shipped.

Procedure	Description	Qty.	Use
1.	Handle bolts Curved washers Locknuts	4 4 4	Install the upper handle.
2.	No parts required	–	Install the traction control linkage.
3.	Carriage bolts Locknuts	2 2	Install the chute control rod.
4.	No parts required	–	Check the tire pressure.
5.	No parts required	–	Check the skids and scraper.
6.	No parts required	–	Check the operation of the traction drive.

1. Installing the Upper Handle

4	Handle bolts
4	Curved washers
4	Locknuts

Procedure

Note: Do not remove the rubber band until you have installed the upper handle.

1. Lift and rotate the upper handle and position it over the lower handle (Figure 3).

Important: Route the cables attached to the Quick Stick inside the upper handle legs and ensure that the cables are not pinched between the handle sections.

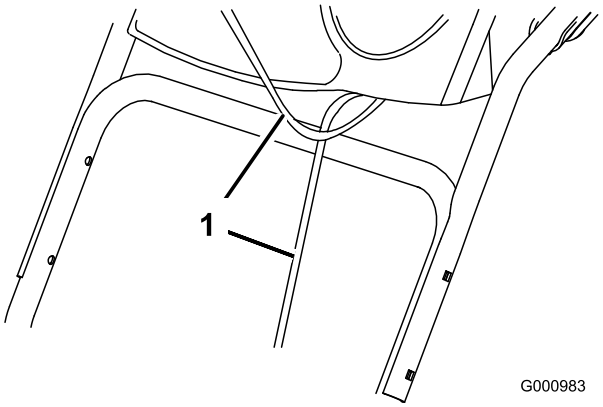

Figure 3

1. Cables

2. Secure the upper handle with 4 handle bolts, 4 curved washers, and 4 locknuts from the loose parts bag (Figure 4).

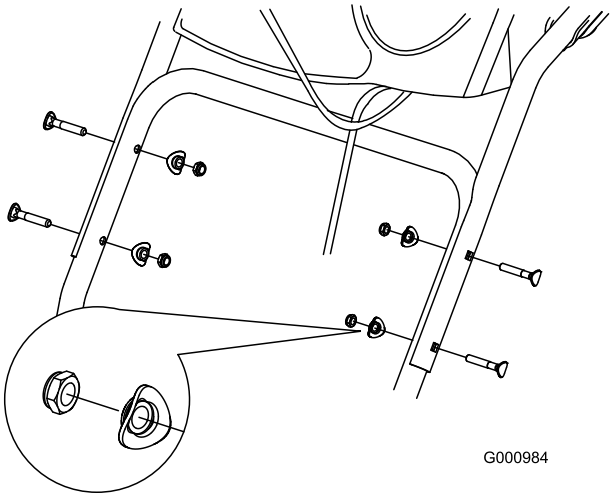

Figure 4

2. Installing the Traction Control Linkage

Procedure

1. Remove the hairpin cotter and washer from the lower end of the speed control rod and insert the lower end of the rod into the lower link arm so that the bent end of the speed control rod faces rearward (Figure 5).

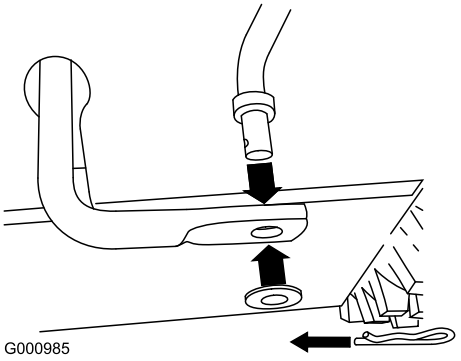

Figure 5

2. Secure the lower end of the speed control rod with the washer and hairpin cotter that you previously removed.
3. Remove the hairpin cotter and the outer washer from the trunnion on the upper end of the speed control rod (Figure 6).

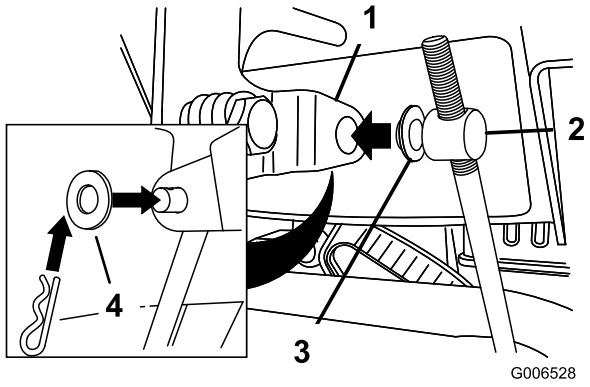

Figure 6

1. Speed selector lever
2. Trunnion
3. Inner washer
4. Outer washer

Note: To make installation easier, leave the inner washer on the trunnion (Figure 6).

4. Shift the speed selector lever into Position R2.
5. Rotate the lower link arm fully upward (counterclockwise) (Figure 7).

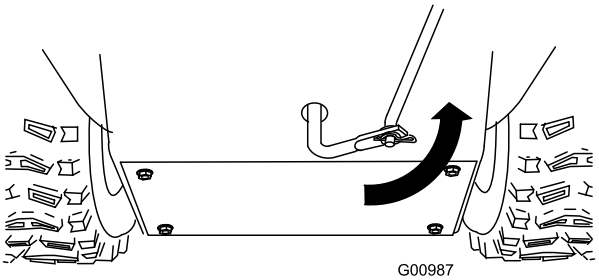

Figure 7

6. Lift up on the speed control rod and insert the trunnion into the hole in the speed selector lever (Figure 6).

   Note: If the trunnion does not fit into the hole when you lift up on the speed control rod, rotate the trunnion upward or downward on the speed control rod until it fits.

7. Secure the trunnion and upper end of the speed control rod with the outer washer and hairpin cotter that you previously removed.

   Note: For easier installation, look down through the opening in the speed selector (Figure 8).

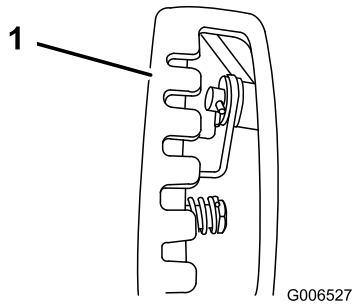

Figure 8

1. Speed selector

3. Installing the Chute Control Rod

2	Carriage bolts
2	Locknuts

Procedure

1. Unwrap the Quick Stick and rotate it so that it is upright and in the center.
2. Hold the blue trigger cap down and pull the lever fully rearward.

   Note: The discharge chute and deflector should face forward. If they do not, hold the blue trigger cap down (but do not move the Quick Stick) and rotate the discharge chute until they do.

3. Align the flattened back end of the long chute control rod with the flattened front end of the short rod that extends from the control panel so that they nest together (Figure 9).

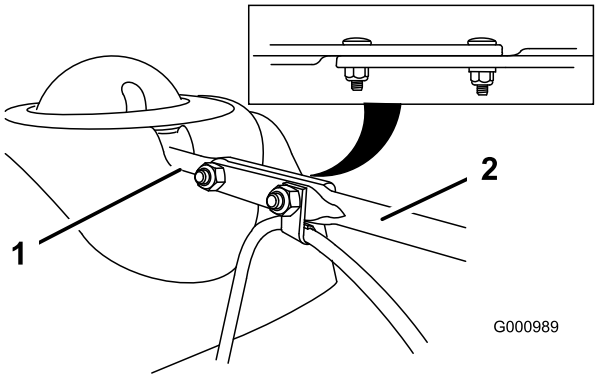

Figure 9

1. Short rod
2. Long chute control rod

4. Insert the front end of the rod into the opening in the back of the chute gear cover until it slides into the chute gear (Figure 10).

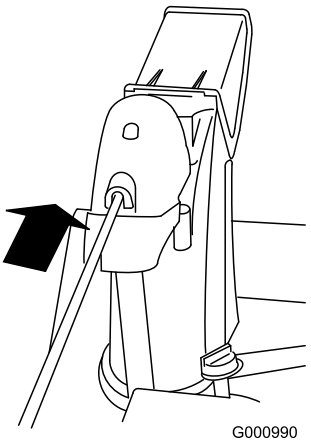

Figure 10

5. Align the holes in the nested ends of the rods and insert 2 carriage bolts (in the loose parts bag) through the short rod from the left side of the snowthrower (from the operating position).
6. Insert the cable clip that supports the deflector cable onto the forward carriage bolt, and secure the carriage bolts with locknuts from the loose parts bag (Figure 11).

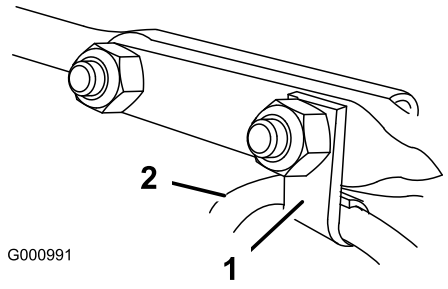

Figure 11

1. Cable clip
2. Deflector cable

7. Hold the blue trigger cap down and rotate the Quick Stick in a circle to ensure that the chute and deflector operate smoothly.

4. Checking the Tire Pressure

Procedure

The tires are overinflated at the factory for shipping. Reduce the pressure equally in both tires to between 17 and 20 psi (116 and 137 kPa).

5. Checking the Skids and Scraper

Procedure

Refer to Checking and Adjusting the Skids and Scraper in Maintenance.

6. Checking the Traction Drive Operation

Procedure

If the traction drive is not properly adjusted, the snowthrower may move in the direction opposite of what you intended, causing injury and/or property damage.

Carefully check the traction drive and adjust it properly, if necessary.

Important: To operate the traction drive, you must operate the snowthrower with the self-propel feature engaged. Refer to Freewheeling or Using the Self-propel Drive.

1. Start the engine; refer to Starting the Engine.
2. Move the speed selector to Position R1; refer to Operating the Speed Selector.
3. Squeeze the left hand (traction) lever to the hand-grip (Figure 12).

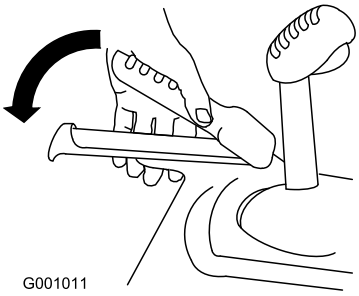

Figure 12

The snowthrower should move rearward. If the snowthrower does not move or moves forward, complete the following:

A. Release the traction lever and stop the engine.

B. Disconnect the trunnion from the speed selector lever (Figure 6).

C. Turn the trunnion downward (clockwise) on the speed control rod (Figure 6).

D. Connect the trunnion to the speed selector lever (Figure 6).

4. Release the traction lever.
5. Move the speed selector to the Position 1; refer to Operating the Speed Selector.
6. Squeeze the left hand (traction) lever to the hand-grip (Figure 12).

   The snowthrower should move forward. If the snowthrower does not move or moves rearward, complete the following:

   A. Release the traction lever and stop the engine.

   B. Disconnect the trunnion from the speed selector lever (Figure 6).

   C. Turn the trunnion upward (counterclockwise) on the speed control rod (Figure 6).

   D. Connect the trunnion to the speed selector lever (Figure 6).

7. If you made any adjustments, repeat this procedure until no adjustments are required.

Important: If the snowthrower moves when the traction lever is in the released position, check the traction cable (refer to Checking and Adjusting the Traction Cable) or take the snowthrower to an Authorized Service Dealer for service.

Product Overview

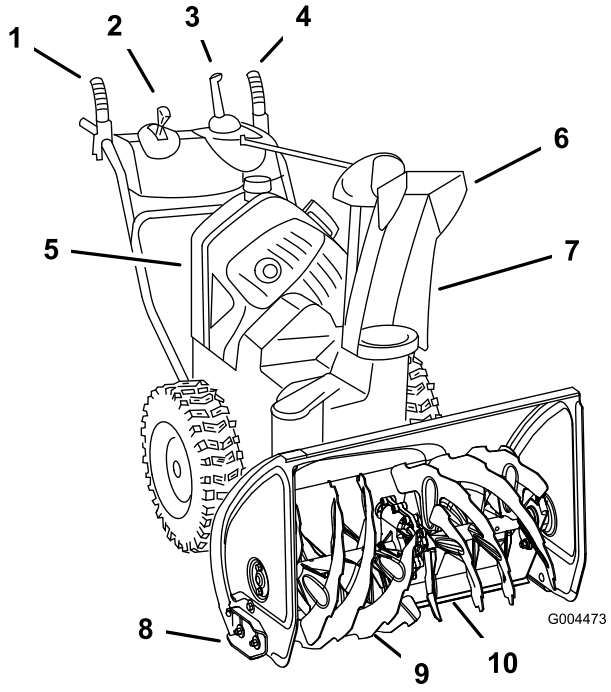

Figure 13

1. Auger/impeller lever
2. Speed selector lever
3. Quick Stick discharge chute control
4. Traction lever
5. Fuel tank
6. Chute deflector
7. Discharge chute
8. Skid (2)
9. Auger
10. Scraper

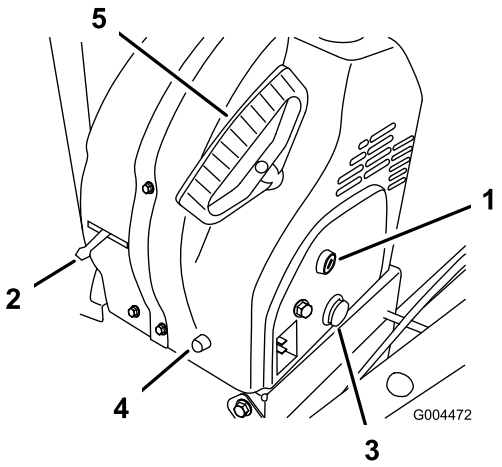

Figure 14

1. Ignition switch
2. Choke
3. Primer
4. Electric start button
5. Recoil starter

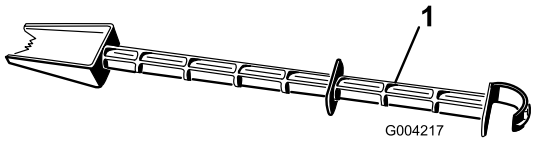

Figure 15

1. Snow cleanout tool (attached to the handle)

Operation

Note: Determine the left and right sides of the machine from the normal operating position.

Gasoline is extremely flammable and explosive. A fire or explosion from gasoline can burn you and others.

- **To prevent a static charge from igniting the gasoline, place the container and/or snowthrower on the ground before filling, not in a vehicle or on an object.**
- **Fill the tank outdoors when the engine is cold. Wipe up spills.**
- **Do not handle gasoline when smoking or around an open flame or sparks.**
- **Store gasoline in an approved fuel container, out of the reach of children.**

Freewheeling or Using the Self-propel Drive

You can operate the snowthrower with the self-propel feature engaged or disengaged (freewheeling).

To freewheel, slide the wheels inward and insert the axle pins through the outer axle holes, but not through the wheel hubs (Figure 16).

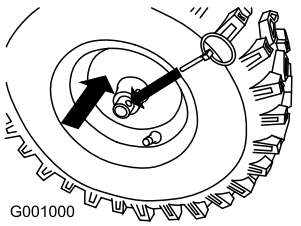

Figure 16

To self-propel, slide the wheels outward and insert the axle pins through the holes in the wheel hubs and the inner axle holes (Figure 17).

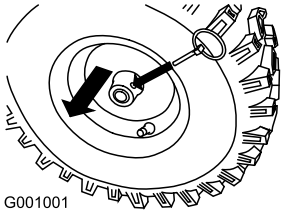

Figure 17

Mixing the Gasoline and Oil

This snowthrower uses a 50:1 gasoline-to-oil mixture. Use **Toro 50:1 2-Cycle Oil (Fuel Stabilizer Added)** or an equivalent high-grade, NMMA TCW-certified two-cycle oil.

Important: To prevent engine damage, do not use automotive oil (such as SAE 30 or 10W30) or fuel mixed at the wrong gasoline-to-oil ratio.

1. Pour a half US gallon (1.9 liters) of fresh, unleaded gasoline into an approved fuel container.
2. Add two-cycle oil to the gasoline according to the chart below (Figure 18):

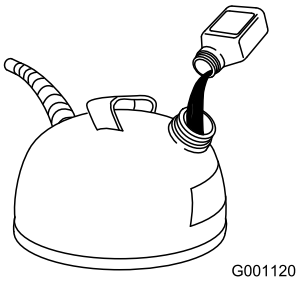

Figure 18

50:1 Gasoline-to-Oil Ratio Mixing Chart	
Gasoline	Oil
1 US gallon (3.8 liters)	2.6 ounces (80 ml)
2 US gallons (7.6 liters)	5.2 ounces (160 ml)

3. Install the cap on the fuel container.
4. Shake the container to mix the gasoline and oil thoroughly.
5. Slowly remove the cap and add the remaining amount of gasoline.

   Note: Do not mix gasoline and oil in the fuel tank. Oil at room temperature mixes easier and more thoroughly than cold oil. Oil below 32°F (0°C) requires additional mixing

Filling the Fuel Tank

Fill the fuel tank with fresh fuel with the proper gasoline-oil mixture as shown in (Figure 19).

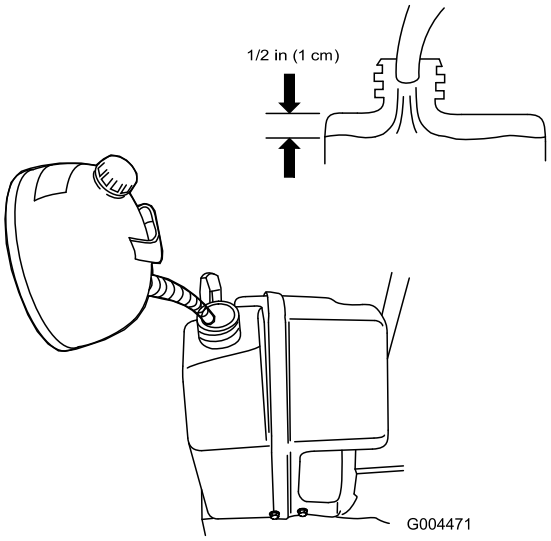

Figure 19

Starting the Engine

1. Insert the key and turn it clockwise to the On position (Figure 20).

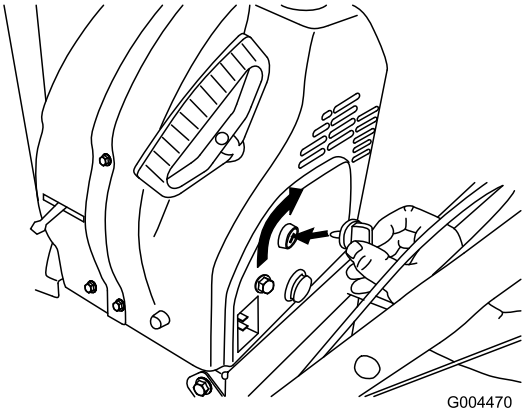

Figure 20

2. Move the choke lever to the right (Figure 21).

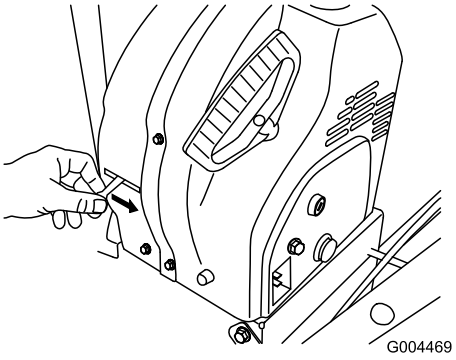

Figure 21

3. Firmly push in the primer 2 times with your thumb, holding the primer in for a second before releasing it each time (Figure 22).

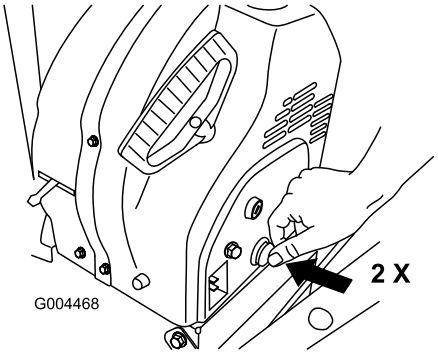

Figure 22

Note: Take your glove off when you push in the primer so that air cannot escape from the primer hole.

Note: Priming excessively may flood the engine and prevent it from starting.

4. Start the snowthrower using the recoil starter Figure 23 or the electric starter (Figure 24).

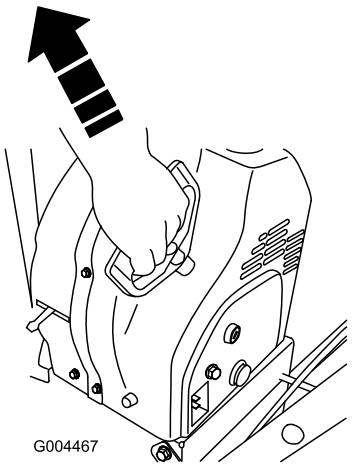

Figure 23

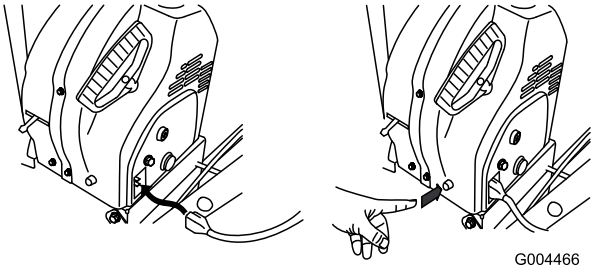

Figure 24

Important: To prevent damaging the electric starter, run it no more than 10 times at intervals of 5 seconds on, then 5 seconds off. If the engine does not start after this series of attempts, allow the starter to cool for at least 40 minutes before trying to start it again. If the engine still does not start, take the snowthrower to an Authorized Service Dealer for service.

5. Disconnect the cord from the electric starter and the outlet.
6. When the engine starts, set the choke to the 3/4 position. As the engine warms up, set the choke to the 1/2 position. When the engine is warm, set the choke to the Off position.

If you leave the snowthrower plugged into a power outlet, someone can inadvertently start the snowthrower and injure people or damage property.

Unplug the power cord whenever you are not starting the snowthrower.

Stopping the Engine

1. Turn the ignition key to the Off position (Figure 25).

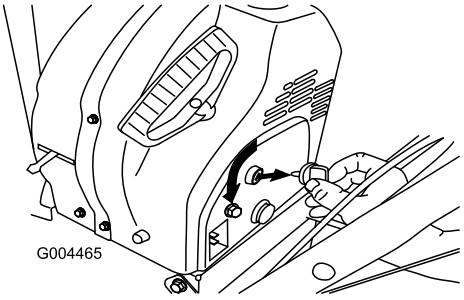

Figure 25

2. Wait for all moving parts to stop before leaving the operating position.

Operating the Traction Drive

If the traction drive is not properly adjusted, the snowthrower may move in the direction opposite of what you intended, causing injury and/or property damage.

Carefully check the traction drive and adjust it properly, if necessary; refer to Checking the Traction Drive Operation in Setup for more information.

Important: If the snowthrower moves when the traction lever is in the released position, check the traction cable (refer to Checking and Adjusting the Traction Cable) or take the snowthrower to an Authorized Service Dealer for service.

Important: To operate the traction drive, you must operate the snowthrower with the self-propel feature engaged. Refer to Freewheeling or Using the Self-propel Drive.

1. To engage the traction drive, squeeze the left hand (traction) lever to the handgrip (Figure 26).

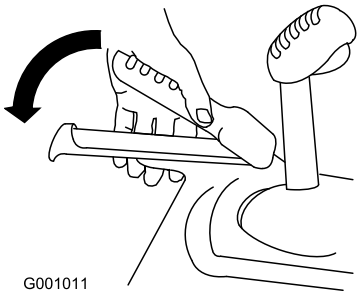

Figure 26

2. To stop the traction drive, release the traction lever.

Operating the Speed Selector

The speed selector has 6 forward and 2 reverse gears. To change speeds, release the traction lever and shift the speed selector lever to the desired position (Figure 27). The lever locks in a notch at each speed selection.

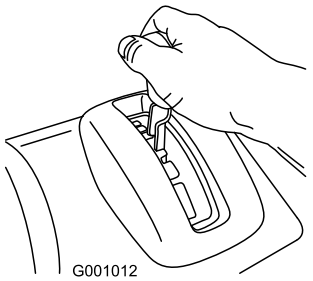

Figure 27

Operating the Auger/Impeller Drive

1. To engage the auger/impeller drive, squeeze the right hand (auger/impeller) lever to the handgrip (Figure 28).

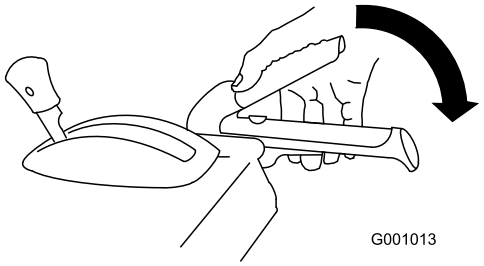

Figure 28

2. To stop the auger and impeller, release the right hand lever.

   Important: When you engage both the auger/impeller lever and the traction lever, the traction lever locks the auger/impeller lever down, freeing your right hand. To release both levers, simply release the left hand (traction) lever.

3. If the auger and impeller continue to rotate when you release the auger/impeller lever, do not operate the snowthrower. Check the auger/impeller cable (refer to Checking and Adjusting the Auger/Impeller Cable) and adjust it if necessary. Otherwise, take the snowthrower to an Authorized Dealer for service.

If the auger and impeller continue to rotate when you release the auger/impeller lever, you could seriously injure yourself or others.

Do not operate the snowthrower. Take it to an Authorized Service Dealer for service.

Operating the Quick Stick®

Hold the blue trigger cap down to use the Quick Stick to move the discharge chute and the chute deflector. Release the trigger cap to lock the discharge chute and chute deflector into position (Figure 29).

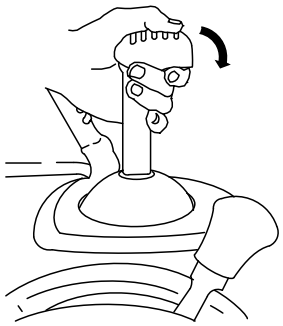

Figure 29

Moving the Discharge Chute

Hold the blue trigger cap down and move the Quick Stick to the left to move the discharge chute to the left; move the Quick Stick to the right to move the discharge chute to the right (Figure 30).

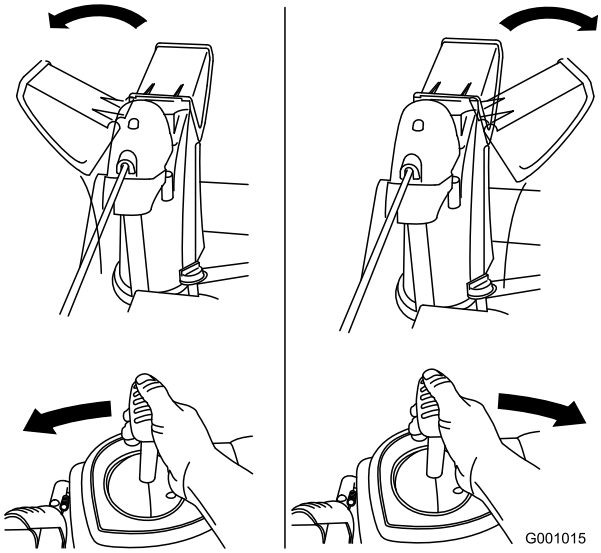

Figure 30

- If the chute does not move, refer to Adjusting the Discharge Chute Latch.
- If the chute does not turn as far to the left as it does to the right, ensure that the cable is routed to the inside of the handles. Refer to Installing the Upper Handle.
- If the chute does not lock into place when you release the trigger cap, refer to Adjusting the Discharge Chute Latch.

Moving the Chute Deflector

Hold the blue trigger cap down and move the Quick Stick forward to lower the chute deflector; move it rearward to raise the chute deflector (Figure 31).

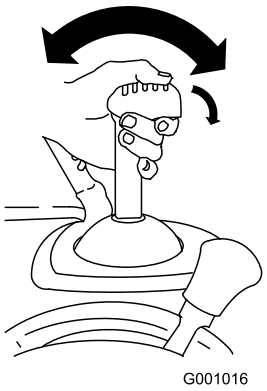

Figure 31

Unclogging the Discharge Chute

If the auger/impeller is running but there is no snow coming out of the discharge chute, the discharge chute may be clogged.

- To unclog the discharge chute, stay in the operating position and release the left hand (traction) lever. While running the auger/impeller, push down on the handles to raise the front of the snowthrower a few inches (centimeters) off the pavement. Then lift the handles quickly to bump the front of the snowthrower on the pavement. Repeat if necessary until a stream of snow comes out the discharge chute.
- If you cannot unclog the discharge chute by bumping the front of the snowthrower, **stop the engine, wait for all moving parts to stop, and use the snow cleanout tool; never use your hand.**

  Important: Unclogging the discharge chute by bumping the front of the snowthrower on the pavement may cause the skids to move. Adjust the skids and tighten the skid bolts securely.

Preventing Freeze-up

- In snowy and cold conditions, some controls and moving parts may freeze. **Do not use excessive force when trying to operate frozen controls.** If you have difficulty operating any control or part, start the engine and let it run for a few minutes.
- After using the snowthrower, let the engine run for a few minutes to prevent moving parts from freezing.

Engage the auger/impeller to clear any remaining snow from inside the housing. Rotate the Quick Stick to prevent it from freezing. Stop the engine, wait for all moving parts to stop, and remove all ice and snow from the snowthrower.

- With the engine off, pull the recoil starter handle several times to prevent the recoil starter from freezing up.

Operating Tips

When the snowthrower is in operation, the impeller and auger can rotate and cut off or injure hands and feet.

- **Before adjusting, cleaning, inspecting, troubleshooting, or repairing the snowthrower, stop the engine and wait for all moving parts to stop. Disconnect the wire from the spark plug and keep it away from the plug to prevent someone from accidentally starting the engine.**
- **Remove an obstruction from the discharge chute; refer to Unclogging the Discharge Chute. If necessary, use the snow cleanout tool, not your hands, to remove an obstruction from the discharge chute.**
- **Stay behind the handles and away from the discharge opening while operating the snowthrower.**
- **Keep face, hands, feet, and any other part of your body or clothing away from concealed, moving, or rotating parts.**

The rotor blades can throw stones, toys, and other foreign objects and cause serious personal injury to the operator or to bystanders.

- **Keep the area to be cleared free of all objects that the rotor blades could pick up and throw.**
- **Keep all children and pets away from the area of operation.**

- Always set the throttle to the Fast position when throwing snow.
- If the engine slows down under a load or the wheels slip, shift the snowthrower into a lower gear.
- If the front of the snowthrower rides up, shift the snowthrower into a lower gear. If the front continues to ride up, lift up on the handles.

Maintenance

Note: Determine the left and right sides of the machine from the normal operating position.

Recommended Maintenance Schedule(s)

Maintenance Service Interval	Maintenance Procedure
After the first 2 hours	• Inspect the traction cable and adjust it if necessary. • Check the auger/impeller cable and adjust it if necessary.
Yearly	• Check the skids and the scraper and adjust them if necessary. • Inspect the traction cable and adjust or replace it if necessary. • Check the auger/impeller cable and adjust it if necessary. • Check the auger gearbox oil and add oil if necessary. • Lubricate the hex shaft. • Inspect the spark plug. Replace and/or gap it if necessary.
Yearly or before storage	• Check the air pressure in the tires and inflate them to 17–20 psi (116–137 kPa). • Drain the gasoline and run the engine to dry out the fuel tank and the carburetor at the end of the season. • Have an Authorized Service Dealer inspect and replace the traction drive belt and/or the auger/impeller drive belt, if necessary.

Important: You can find more information about maintaining and servicing your snowthrower at www.Toro.com.

Preparing for Maintenance

1. Move the snowthrower to a level surface.
2. Stop the engine and wait for all moving parts to stop.
3. Remove the ignition key.
4. After performing the maintenance procedure(s), insert the ignition key.

Checking and Adjusting the Skids and Scraper

Service Interval: Yearly—Check the skids and the scraper and adjust them if necessary.

Check the skids and the scraper to ensure that the auger does not contact the paved or gravel surface. Adjust the skids and the scraper as needed to compensate for wear.

1. Check the tire pressure. Refer to Checking the Tire Pressure.
2. Loosen the nuts that secure both skids to the auger sides until the skids slide up and down easily (Figure 32).

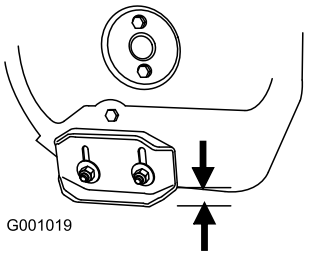

Figure 32

3. Support the side plates so that they are **at least** 1/2 inch (1.3 cm) above a level surface.

   Important: The auger blades must be supported above the ground by the skids.
4. Ensure that the scraper is 1/8 inch (3 mm) above and parallel to a level surface.

   Note: If the pavement is cracked, rough, or uneven, adjust the skids to raise the scraper. For gravel surfaces, adjust the skids further down to prevent the snowthrower from picking up rocks.
5. Move the skids down until they are even with the ground.
6. Firmly tighten the nuts that secure both skids to the auger sides.

   Note: To quickly adjust the skids if they loosen, support the scraper 1/8 inch (3 mm) off the

pavement, then adjust the skids down to the pavement.

Note: If the skids become excessively worn, you can turn them over and set the unused side toward the pavement.

Checking and Adjusting the Traction Cable

Service Interval: After the first 2 hours—Inspect the traction cable and adjust it if necessary.

Yearly—Inspect the traction cable and adjust or replace it if necessary.

If the snowthrower does not drive in the forward or reverse speeds or it drives when you release the traction lever, adjust the traction cable.

With the traction lever disengaged, check the pin in the elongated slot in the left side of the snowthrower above the tire. There should be a gap of 1/32 to 1/16 inch (1 to 1.5 mm) from the front of the slot to the front edge of the pin (Figure 33).

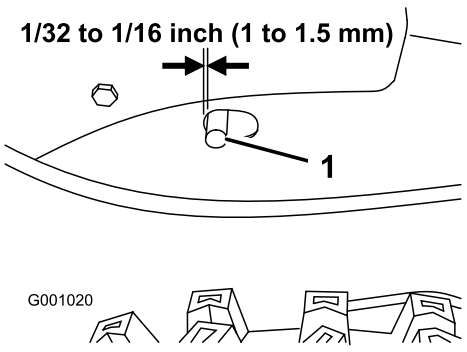

Figure 33

1. Pin

If the left hand (traction) cable is not properly adjusted, do the following steps:

1. Loosen the jam nut.
2. Loosen or tighten the turnbuckle to adjust the pin until it is the proper gap from the front edge of the slot.
3. Tighten the jam nut (Figure 34).

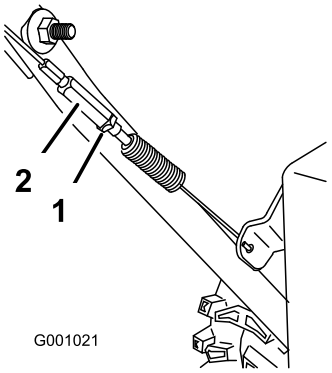

Figure 34

1. Jam nut
2. Turnbuckle

Checking and Adjusting the Auger/Impeller Cable

Service Interval: After the first 2 hours—Check the auger/impeller cable and adjust it if necessary.

Yearly—Check the auger/impeller cable and adjust it if necessary.

1. Remove the 5 fasteners on the front engine cover (Figure 35), but do not remove the cover.

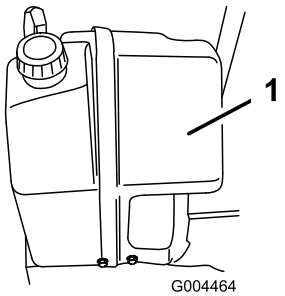

Figure 35

2. Remove the fasteners on the left belt cover, then remove the cover in the sequence shown in Figure 36.

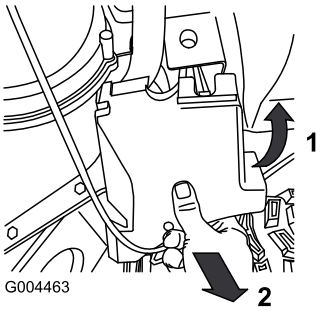

Figure 36

3. Remove the fasteners on the right belt cover, then remove the cover in the sequence shown in Figure 37.

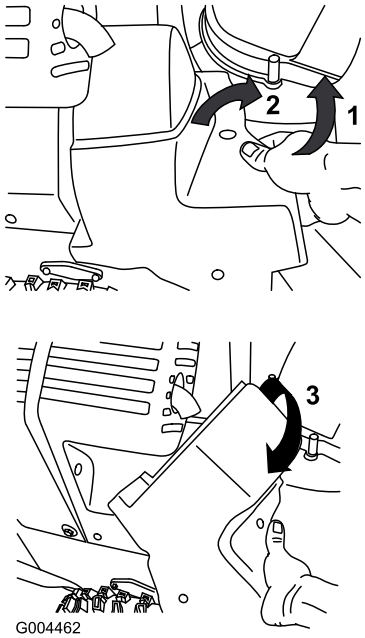

Figure 37

4. With the auger/impeller lever disengaged, ensure that the gap between the auger clutch assembly and the tab is 1/16 inch (1.5 mm) (Figure 38).

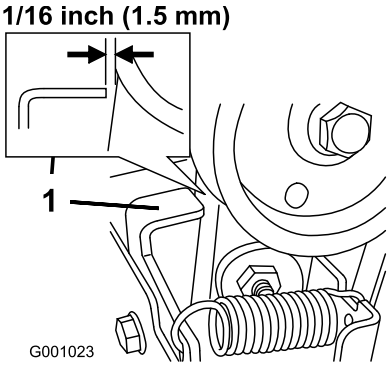

Figure 38

1. Tab

5. If the auger/impeller cable is not properly adjusted, do the following steps:
6. Loosen the jam nut (Figure 39).

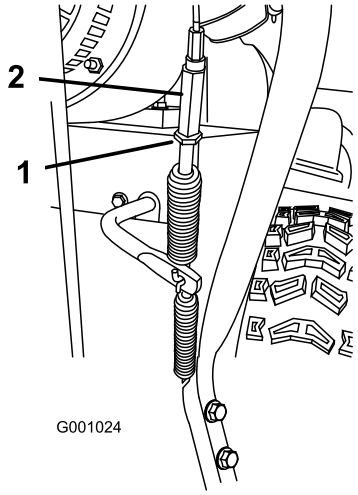

Figure 39

1. Jam nut
2. Turnbuckle

7. Loosen or tighten the turnbuckle that adjusts the tension on the cable (Figure 39).

   Note: Ensure that the cable does not twist.
8. Adjust the turnbuckle until you obtain the proper gap.
9. Tighten the jam nut.
10. Insert the left belt cover into place.
11. Insert the right belt cover into place.
12. Secure the front engine cover to the rear engine cover using the fasteners previously removed.
13. Secure the left and right belt covers using the fasteners previously removed
14. If the auger/impeller cable is properly adjusted but a problem remains, contact an Authorized Service Dealer.

Checking the Auger Gearbox Oil Level

Service Interval: Yearly—Check the auger gearbox oil and add oil if necessary.

1. Move the snowthrower to a level surface.
2. Clean the area around the pipe plug (Figure 40).

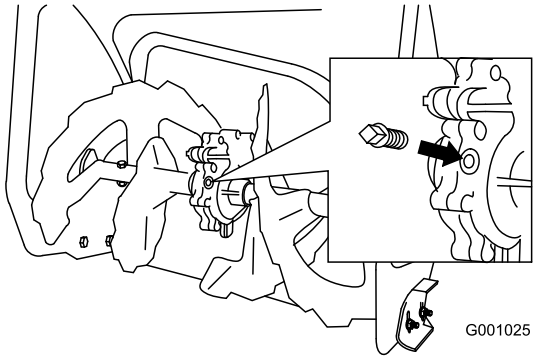

Figure 40

3. Remove the pipe plug from the gearbox.
4. Check the oil level in the gearbox. The oil should be at the point of overflowing at the filler opening.
5. If the oil level is low, add GL-5 or GL-6, SAE 85-95 EP transmission oil to the gearbox until the point of overflow.

   Note: Do not use synthetic oil.
6. Install the pipe plug in the gearbox.

Lubricating the Hex Shaft

Service Interval: Yearly—Lubricate the hex shaft.

Lightly lubricate the hex shaft yearly with automotive engine oil (Figure 41).

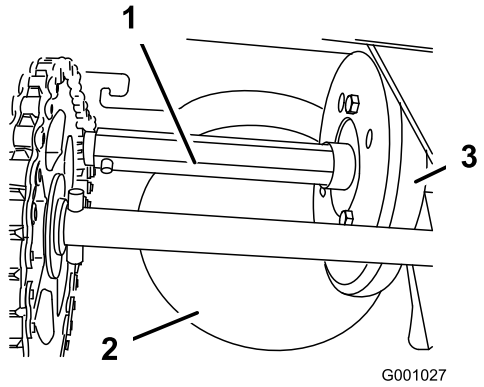

Figure 41

1. Hex shaft
2. Aluminum friction plate
3. Rubber wheel

Important: Do not get oil on the rubber wheel or the aluminum friction drive plate because the traction drive will slip (Figure 41).

1. Drain the gasoline from the fuel tank.
2. Tip the snowthrower forward onto its auger housing and block it so that it cannot fall.
3. Remove the back cover (Figure 42).

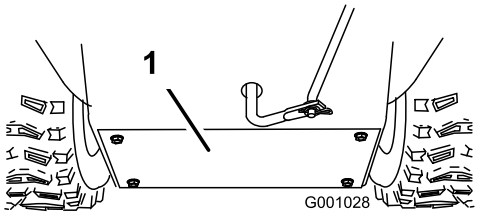

Figure 42

1. Back cover

4. Move the speed selector lever to Position R2.
5. Dip your finger in automotive engine oil and **lightly** lubricate hex shaft.
6. Move the speed selector lever to Position 6.
7. Lubricate the other end of the hex shaft.
8. Move the speed selector lever forward and rearward a few times.
9. Install the back cover and return the snowthrower to the operating position.

Inspecting and Replacing the Spark Plug

Service Interval: Yearly—Inspect the spark plug. Replace and/or gap it if necessary.

Use a **NGK BPMR4A** or equivalent spark plug. Check and gap the spark yearly, and replace the plug if necessary.

1. Remove the 5 fasteners on the front engine cover (Figure 43), but do not remove the cover.

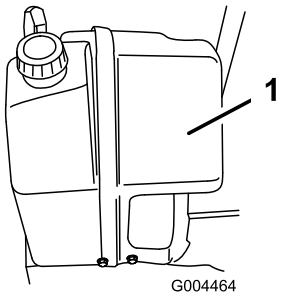

Figure 43

2. Remove the fasteners on the left belt cover, then remove the cover in the sequence shown in Figure 44.

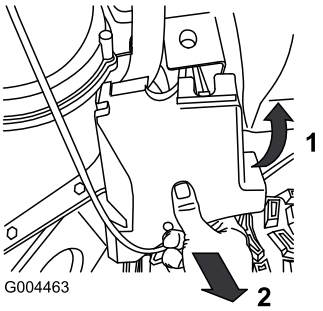

Figure 44

3. Remove the fasteners on the right belt cover, then remove the cover in the sequence shown in Figure 45.

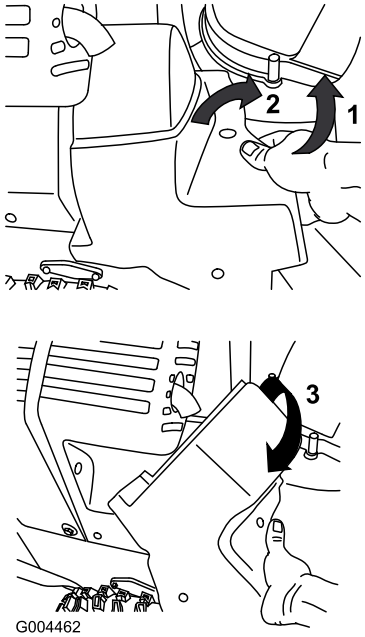

Figure 45

4. Separate the front engine cover from the rear engine cover and disconnect the wire from the spark plug (Figure 46).

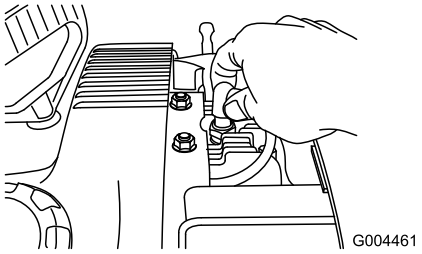

Figure 46

5. Clean around the base of the spark plug.
6. Remove the spark plug.
7. Examine the spark plug and replace it if it is cracked, fouled, dirty, or if the electrodes are worn.

Important: Do not clean the electrodes because grit could enter the cylinder and damage the engine.

8. Set the gap between the electrodes on the spark plug at 0.030 inch (0.76 mm) (Figure 47).

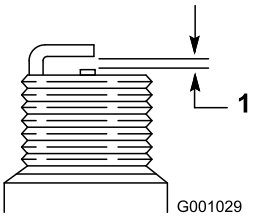

Figure 47

1. 0.030 inch (0.76 mm)

9. Install the spark plug by hand and then torque it to 15 ft-lb (20.4 N·m).

Note: If you do not have a torque wrench, tighten the plug firmly.

Adjusting the Discharge Chute Latch

If the discharge chute does not lock into the desired position or does not unlock so that you can move it to another position, adjust the discharge chute latch.

1. Remove the fastener on the gear cover (Figure 48), lift the front of the cover up, and slide it back and out of the way.

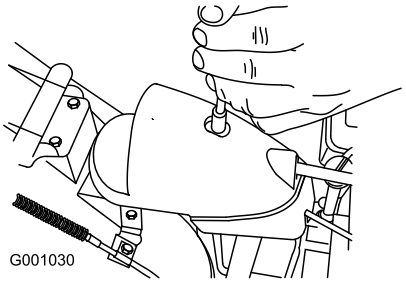

Figure 48

2. Loosen the bolt on the cable clamp (Figure 49).

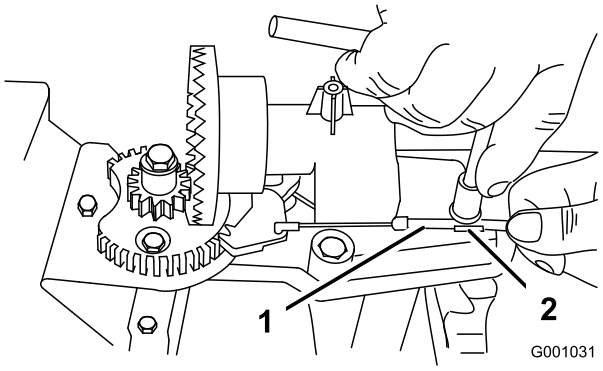

Figure 49

1. Cable conduit 2. Cable clamp

3. Grasp the cable conduit and move it toward the front of the machine until the discharge chute latch fully engages the gear teeth (Figure 49 and Figure 50).

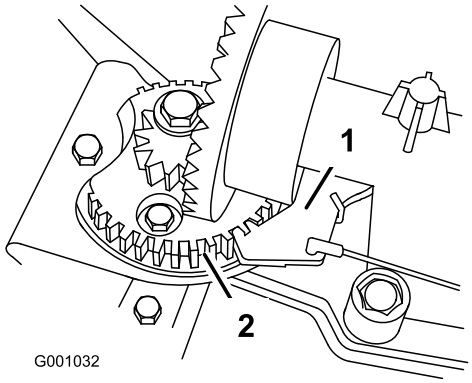

Figure 50

1. Discharge chute latch 2. Gear teeth

Note: The latch is spring loaded and will naturally move into the teeth of the gear (Figure 50).

4. Remove any slack in the cable by pulling the cable conduit rearward.
5. Tighten the bolt on the cable clamp.
6. Install and secure the gear cover.

Replacing the Drive Belts

If the auger/impeller drive belt or the traction drive belt becomes worn, oil-soaked, or otherwise damaged, go to www.Toro.com for additional service information or have an Authorized Service Dealer replace the belt.

Storage

- **Gasoline vapors can explode.**
- **Do not store gasoline more than 30 days.**
- **Do not store the snowthrower in an enclosure near an open flame.**
- **Allow the engine to cool before storing it.**

Preparing the Snowthrower for Storage

1. On the last refueling of the year, add fuel stabilizer to fresh fuel as directed by the engine manufacturer.

   Note: If you use Toro 50:1 2-Cycle Oil (Fuel Stabilizer Added), you do not need to add a fuel stabilizer/conditioner.
2. Run the engine for 5 minutes to distribute the conditioned fuel through the fuel system.
3. Run the snowthrower until the engine stops from running out of fuel.
4. Prime the engine and start it again.
5. Allow the engine to run until it stops. When you can no longer start the engine, it is sufficiently dry.
6. Stop the engine and allow it to cool.
7. Remove the ignition key.
8. Disconnect the spark plug wire.
9. Dispose of any unused fuel properly. Recycle it according to local codes, or use it in your automobile.

   Note: Do not store stabilized fuel for more than 90 days.
10. Clean the snowthrower thoroughly.
11. Tighten all loose screws, bolts, and locknuts. Repair or replace any damaged parts.

Removing the Snowthrower from Storage

1. Connect the spark plug wire.
2. Perform the annual maintenance procedures as given in the Recommended Maintenance Schedule.

Troubleshooting

Problem	Possible Cause	Corrective Action
Electric starter does not turn (electric-start models only)	1. The power cord is disconnected at the outlet or the snowthrower. 2. The power cord is worn, corroded, or damaged. 3. The power outlet is not energized.	1. Connect the power cord to the outlet and/or the snowthrower. 2. Replace the power cord. 3. Have a qualified electrician energize the outlet.
Engine does not start or starts hard	1. The key is not in the ignition or is in the Stop position. 2. The choke is in the Off position and the primer has not been pressed. 3. The fuel shutoff valve is not open. 4. The throttle is not in the Fast position. 5. The fuel tank is empty or the fuel system contains stale fuel. 6. The spark plug wire is loose or disconnected. 7. The spark plug is pitted, fouled, or the gap is incorrect. 8. The fuel vent cap is restricted. 9. The engine oil level in the engine crankcase is too low or too high.	1. Insert the key into the ignition and turn it to the On position. 2. Move the choke to the On position and press the primer 3 times. 3. Open the fuel shutoff valve. 4. Move the throttle to the Fast position. 5. Drain and/or fill the fuel tank with fresh gasoline (not more than 30 days old). If the problem persists, contact an Authorized Service Dealer. 6. Connect the wire to the spark plug. 7. Check the spark plug and adjust the gap if necessary. Replace the spark plug if it is pitted, fouled, or cracked. 8. Remove the vent restriction or replace the fuel cap. 9. Add or drain oil to adjust the oil level in the engine crankcase to the Full mark on the dipstick.
Engine runs rough	1. The choke is in the On position. 2. The fuel shutoff valve is not completely open. 3. The fuel tank is nearly empty or contains stale fuel. 4. The spark plug wire is loose. 5. The spark plug is pitted, fouled, or the gap is incorrect. 6. The engine oil level in the engine crankcase is too low or too high.	1. Move the choke to the Off position. 2. Open the fuel shutoff valve. 3. Drain and fill the fuel tank with fresh gasoline (not more than 30 days old). If the problem persists, contact an Authorized Service Dealer. 4. Connect the wire to the spark plug. 5. Check the spark plug and adjust the gap if necessary. Replace the spark plug if it is pitted, fouled, or cracked. 6. Add or drain oil to adjust the oil level in the engine crankcase to the Full mark on the dipstick.
Engine runs, but the snowthrower discharges snow poorly or not at all	1. The throttle is not in the Fast position when throwing snow. 2. The snowthrower is moving too fast to clear the snow. 3. You are trying to remove too much snow per swath. 4. You are trying to remove extremely heavy or wet snow. 5. The discharge chute is plugged. 6. The auger/impeller drive belt is loose or is off the pulley.	1. Move the throttle to the Fast position. 2. Shift the snowthrower into a lower gear. 3. Reduce the amount of snow removed per swath. 4. Don’t overload the snowthrower with extremely heavy or wet snow. 5. Unclog the discharge chute. 6. Install and/or adjust the auger/impeller drive belt; refer to www.Toro.com for servicing information or take the snowthrower to an Authorized Service Dealer.

Problem	Possible Cause	Corrective Action
	7. The auger/impeller drive belt is worn or broken.	7. Replace the auger/impeller drive belt; refer to www.Toro.com for servicing information or take the snowthrower to an Authorized Service Dealer.
Discharge chute either does not lock into place or does not move	1. The discharge chute latch is not properly adjusted.	1. Adjust the discharge chute latch.
Snowthrower does not properly clear the snow off the surface	1. The skids and/or scraper are not properly adjusted. 2. The pressure in the tires is not equal.	1. Adjust the skids and/or the scraper. 2. Check and adjust the pressure in one or both tires.

Notes:

Federal Emission Control Warranty Statement

A Two-Year Limited Warranty

Your Warranty Rights and Obligations

The U.S. Environmental Protection Agency (EPA), Toro, and Toro Warranty Company are pleased to explain the emission control system warranty on your 1997 and later utility/lawn/garden equipment engine. 1997 and later model year utility/lawn/garden equipment engines must be designed, built and equipped, at the time of sale, to meet the U.S. EPA regulations for small non-road engines. The equipment engine must be free from defects in materials and workmanship, which cause it to fail to conform with U.S. EPA standards, for the first two years of engine use from the date of sale to the ultimate purchaser. Toro and Toro Warranty Company warrant the emission control system on your utility/lawn/garden equipment engine for the period of time listed above, provided there has been no abuse, neglect, or improper maintenance of your utility/lawn/garden equipment engine.

Your emission control system may include parts such as the carburetor or fuel injection system, the ignition system, and catalytic converter. Also included may be hoses, belts, connectors, and other emission related assemblies.

Where a warrantable condition exists, Toro and Toro Warranty Company promise to repair your engine at no cost to you, including diagnosis, parts, and labor.

Manufacturer's Warranty Coverage

Toro and its affiliate, Toro Warranty Company, pursuant to an agreement between them, jointly warrant the 1997 and later utility/lawn/garden equipment engines for two years from the date of delivery. If any emission-related part on your engine is defective in materials or workmanship, we will repair or replace the part, free of charge.

Owner Responsibilities

As the engine owner, you are responsible for the performance of the required maintenance listed in your operator's manual. We recommend that you retain all receipts covering maintenance on your equipment, but we cannot deny warranty solely for the lack of receipts or for your failure to ensure the performance of all scheduled maintenance.

Any replacement part or service that is equivalent in performance and durability may be used in non-warranty maintenance or repairs, and shall not reduce our warranty obligation.

As the engine owner, you should be aware that we may deny you warranty coverage if your engine or a part has failed due to abuse, neglect, improper maintenance, or unapproved modifications or parts.

You are responsible for presenting your equipment engine to an Authorized Service Dealer as soon as a problem exists. The warranty repairs should be completed in a reasonable amount of time, not to exceed thirty (30) days.

If you have any questions regarding your warranty rights and responsibilities, contact us at:

Customer Care Department, Consumer Division
Toro Warranty Company
8111 Lyndale Avenue South
Bloomington, MN 55420-1196
800-348-2424 (U.S. customers)
877-484-9255 (Canada customers)

Warranted Parts

The warranty period begins on the date the engine or equipment is delivered to a retail purchaser. Toro and Toro Warranty Company jointly warrant to the initial owner and each subsequent purchaser that the engine is free from defects in materials and workmanship, which cause the engine to fail to conform with applicable regulations, for a period of two years.

Failures caused by abuse, neglect, or improper maintenance are not covered. The use of add-on or modified parts can be grounds for disallowing a warranty claim. We are not liable to cover failures of warranted parts caused by the use of add-on or modified parts. We are liable for damages to other engine components caused by the failure of a warranted part still under warranty. The owner is responsible for the performance of the required maintenance, as defined in the operator's manual.

Any warranted part which is not scheduled for replacement as required maintenance, or which is scheduled only for regular inspection to the effect of "repair or replace as necessary" shall be warranted for the warranty period. Any warranted part which is scheduled for replacement as required maintenance shall be warranted for the period of time up to the first scheduled replacement point for that part. Coverage under this warranty extends only to the parts listed below (the emissions system parts) to the extent that these parts were present on the engine when purchased.

- Fuel Metering System
  - Cold start enrichment system including the choke mechanism or priming system
  - Fuel pump
  - Air fuel ratio feedback system
  - Carburetor and internal parts
  - Fuel injection system
- Air Induction System
  - Air cleaner
  - Reed intake system
  - Intake manifold
  - Controlled hot air intake system
- Ignition System
  - Spark plug(s)
  - Ignition coils and electronics
  - Advance/retard mechanisms
- Catalytic Converter/Thermal Reactor System
  - Catalytic converter
  - Thermal reactor
  - Exhaust manifold
- Air Injection System
  - Air injection system or pulse valve
  - Valves affecting distribution of air
- Exhaust Gas Recirculation (EGR) System
  - EGR valve body and piping system connecting to the intake side of the engine
  - EGR control system
- Particulate Controls
  - Traps, filters, precipitators, and any other device used to capture particulate emissions
- Miscellaneous Items Used in the Above Systems
  - Vacuum, temperature, and time-sensitive valves and switches
  - Electronic controls
  - Hoses, connectors, and assemblies of same

Instructions for Obtaining Warranty Service

If you think that your Toro Product contains a defect in materials or workmanship, follow this procedure:

1. Contact any Toro Authorized or Master Service Dealer to arrange service at their dealership. To locate a dealer convenient to you, refer to the Yellow Pages of your telephone directory (look under “Lawn Mowers”) or access our website at www.Toro.com. U.S. Customers may also call 800-421-9684 to use our 24-hour Toro dealer locator system.
2. Bring the product and your proof of purchase (sales receipt) to the Service Dealer.

The owner shall not be charged for diagnostic labor which leads to the determination that a warranted part is defective, if the diagnostic work is performed at a warranty station.

General Conditions

Neither The Toro Company nor Toro Warranty Company is liable for indirect, incidental or consequential damages in connection with the use of the Toro Products covered by this warranty, except for damages to other engine components caused by the failure of a warranted part still under warranty.

All implied warranties of merchantability (that the product is fit for ordinary use) and fitness for use (that the product is fit for a particular purpose) are limited to the duration of the express warranty.

Some states do not allow exclusions of incidental or consequential damages, or limitations on how long an implied warranty lasts, so the above exclusions and limitations may not apply to you.

This warranty gives you specific legal rights, and you may also have other rights which vary from state to state.

Part No. 374-0023 Rev. B

Gas Powered Snow Products

The Toro Total Coverage Guarantee

A Two-Year Full Warranty (Limited Warranty for Commercial Use)

Conditions and Products Covered

The Toro Company and its affiliate, Toro Warranty Company, pursuant to an agreement between them, jointly promise to repair any Toro Product used for normal residential purposes* if defective in materials or workmanship.

The following time periods apply from the date of purchase:

Snow Products	Warranty Period
All products and attachments	2-year full warranty
Power Max™ snow products:	
Chute	5-year full warranty
Chute deflector	5-year full warranty
Impeller housing cover	5-year full warranty

This warranty includes the cost of parts and labor, but you must pay transportation costs. Transportation within a fifteen mile radius of the servicing dealer is covered under this warranty for two-stage snowthrowers only.

This warranty applies to all gasoline powered snow products.

* Normal residential purposes means use of the product on the same lot as your home. Use at more than one location is considered commercial use, and the commercial use warranty would apply.

Limited Warranty for Commercial Use

Toro Consumer Products used for commercial, institutional, or rental use are warranted against defects in materials or workmanship for 45 days from the date of purchase.

Instructions for Obtaining Warranty Service

If you think that your Toro Product contains a defect in materials or workmanship, follow this procedure:

1. Contact any Toro Authorized or Master Service Dealer to arrange service at their dealership. To locate a dealer convenient to you, refer to the Yellow Pages of your telephone directory (look under "Lawn Mowers") or access our website at www.Toro.com. U.S. Customers may also call 800-248-8676 to use our 24-hour Toro dealer locator system.
2. Bring the product and your proof of purchase (sales receipt) to the Service Dealer.

If for any reason you are dissatisfied with the Service Dealer's analysis or with the assistance provided, contact us at:

Customer Care Department, Consumer Division
Toro Warranty Company
8111 Lyndale Avenue South
Bloomington, MN 55420-1196
866-336-5205 Toll free (U.S. customers)
866-854-9033 Toll free (Canada customers)

Owner Responsibilities

You must maintain your Toro Product by following the maintenance procedures described in the operator's manual. Such routine maintenance, whether performed by a dealer or by you, is at your expense.

Items and Conditions Not Covered

There is no other express warranty except for special emission system coverage on some products and the Toro Starting Guarantee on GTS engines. This express warranty does not cover:

- Cost of regular maintenance service or parts, such as filters, fuel, lubricants, tune-up parts, brake and clutch adjustments
- Any product or part which has been altered, misused, or required replacement or repair due to normal wear, accidents, or lack of proper maintenance
- Repairs necessary due to improper fuel, contaminants in the fuel system, or failure to properly prepare the fuel system prior to any period of non-use over three months

All repairs covered by this warranty must be performed by an Authorized Toro Service Dealer using Toro approved replacement parts.

General Conditions

Repair by an Authorized Toro Service Dealer is your sole remedy under this warranty.

Neither The Toro Company nor Toro Warranty Company is liable for indirect, incidental or consequential damages in connection with the use of the Toro Products covered by this warranty, including any cost or expense of providing substitute equipment or service during reasonable periods of malfunction or non-use pending completion of repairs under this warranty.

Some states do not allow exclusions of incidental or consequential damages, or limitations on how long an implied warranty lasts, so the above exclusions and limitations may not apply to you.

This warranty gives you specific legal rights, and you may also have other rights which vary from state to state.

Countries Other than the United States or Canada

Customers who have purchased Toro products exported from the United States or Canada should contact their Toro Distributor (Dealer) to obtain guarantee policies for your country, province, or state. If for any reason you are dissatisfied with your Distributor's service or have difficulty obtaining guarantee information, contact the Toro importer. If all other remedies fail, you may contact us at Toro Warranty Company.