FORM NO. 3315–164

TORO®

MODEL NO. 20325–2000001 & UP

PARTS CATALOG

21" RECYCLER®
Mower

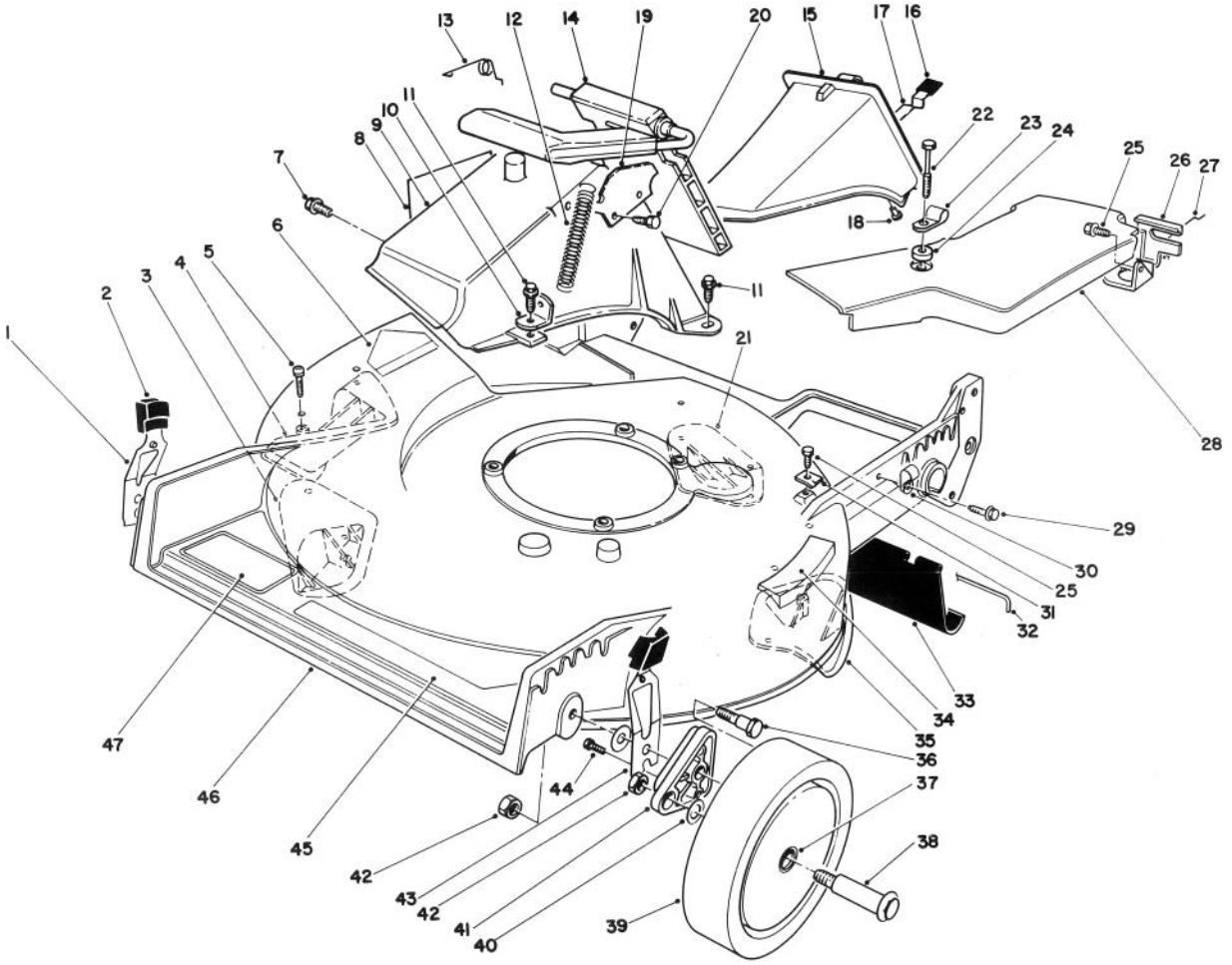

HOUSING ASSEMBLY

Ref. No.	Part No.	Description	No. Used
1	71–0560	Spring Arm Ass'y R.H.	1
2	25–7740	Knob – Arm	2
3	76–2120	Plate – Kicker Right Front	1
4	76–2130	Plate – Kicker Left Front	1
5	32144–111	Screw – Plastite	8
6	56–6270	Decal – Danger	1
7	46–6810	Screw & Washer Assembly	1
8	62–4060	Decal – Danger	1
9	82–9151	Tunnel – Discharge	1
10	80–3780	Bracket – Spring	1
11	46–6811	Screw & Washer Assembly	3
12	76–4660	Spring – Door	1
13	80–3770	Retainer – Door	1
14	77–0200	Door Assembly	1
15	77–0501	Discharge Plug Assembly (Incl. Ref. #16–18)	1
16	76–4650	Grip – Latch	1
17	76–4640	Latch – Plate	1
18	3295–35	Rivet	1
19	76–4570	Plate – Latch	1
20	46–8090	Screw – Tapping	2
21	76–2150	Plate – Kicker Left Rear	1
22	37–7262	Screw – Hex Hd. Tapping	1
23	2412–87	Clamp – Cable	1
24	3–5792	Washer	1
25	32144–70	Screw – Thread Forming Hex Washer Hd.	2
26	82–5680	Bracket – Traction Adj.	1
27	46–7030	Retainer – Cable	1
28	82–9910	Cover – Belt	1
29	32144–112	Screw – Self Tapping	1
30	2412–83	R–Clamp	1
31	62–3720	Clamp – Cable	1
32	33–3208	Rod – Shield	1

TPS

©The TORO Company – 1991

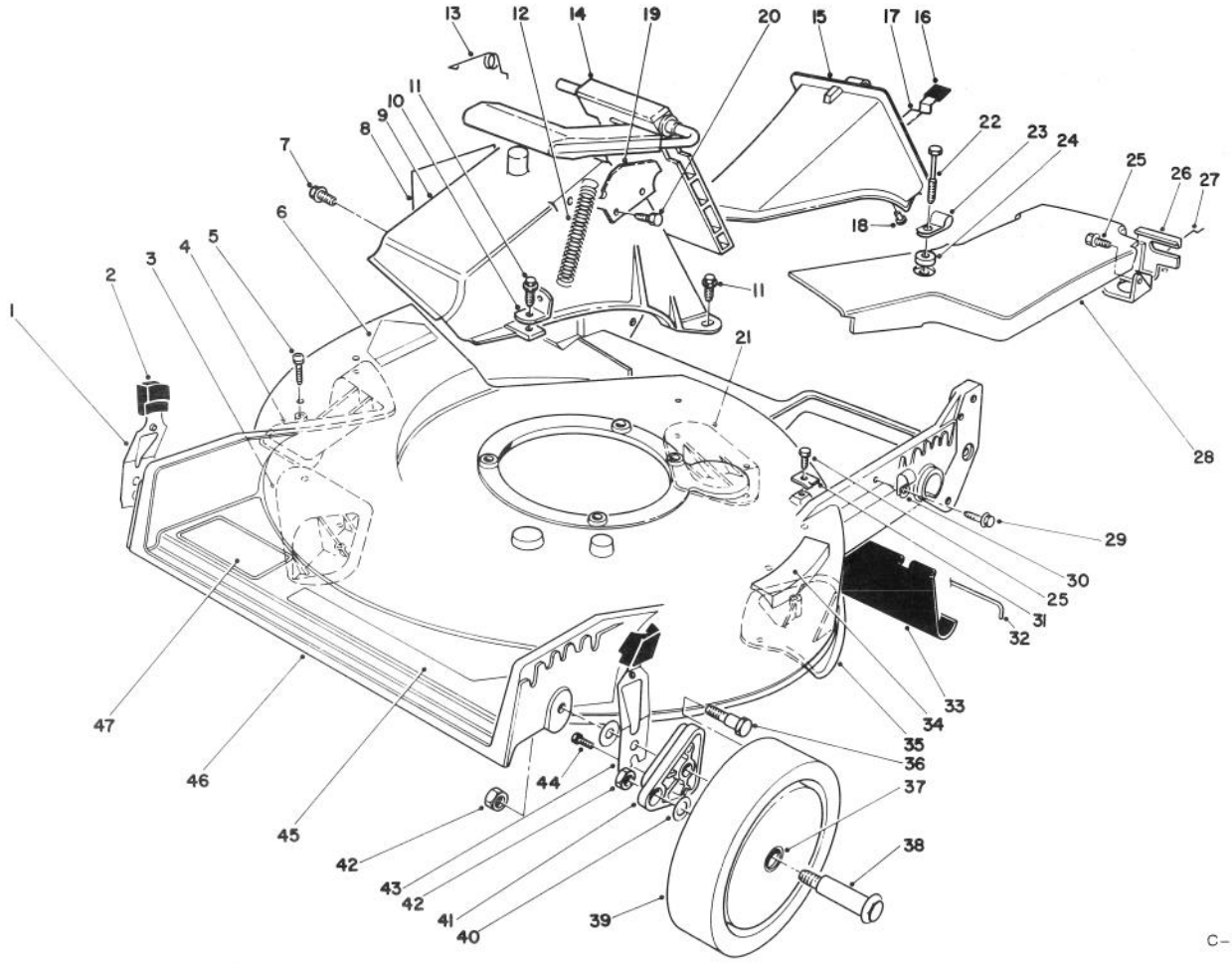

HOUSING ASSEMBLY (CONTINUED)

Ref. No.	Part No.	Description	No. Used
33	44-0580	Shield – Trailing	1
34	62-3950	Decal – Step Pad	1
35	76-2140	Plate – Kicker Right Rear	1
36	66-0561	Screw – Shoulder	2
37	27-6250	Bushing – Wheel	4
38	27-6231	Bolt – Wheel	2
39	11-9509	Wheel & Tire Assembly (Incl Ref. #37)	2
40	40-1940	Washer – Wheel Bolt	4

Ref. No.	Part No.	Description	No. Used
41	66-0580	Arm – Pivot	2
42	52-3620	Nut – Lock	4
43	71-0570	Spring Arm Assembly L.H.	1
44	32144-85	Screw – Thread Forming	2
45	76-1950	Decal – Recycler	1
46	14-3509	Housing Assembly (Incl. Ref. #3-6, 21, 35, 5 on pg. 3, & 30-31 on pg. 4)	1
47	71-0600	Decal – Toro	1

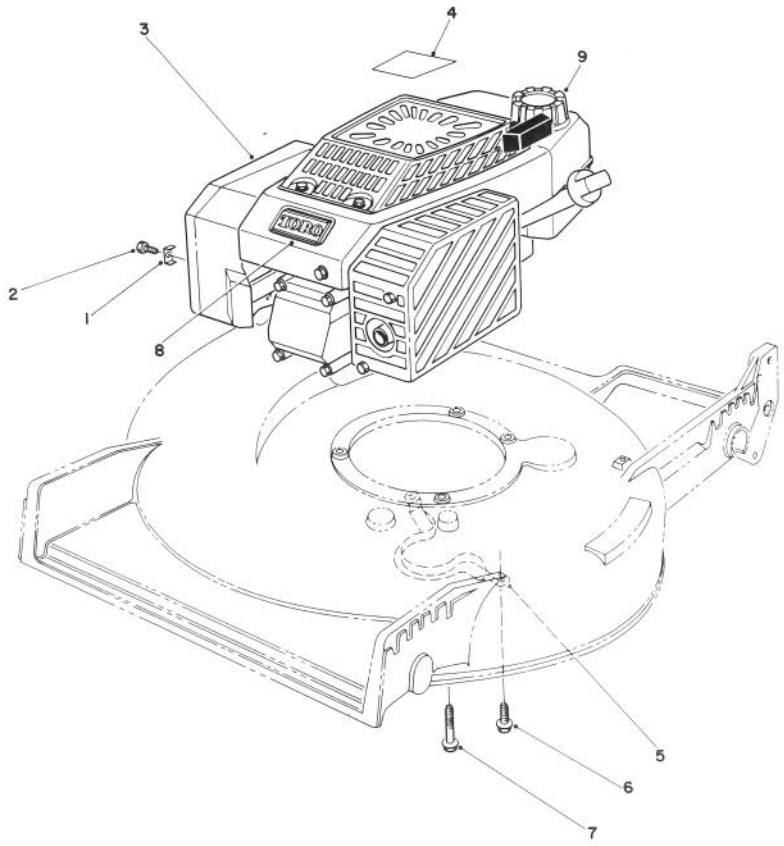

C-0718

ENGINE ASSEMBLY

Ref. No.	Part No.	Description	No. Used
1	2210-249	Clamp - Throttle	1
2	2210-313	Screw - Clamp	1
3	77-8990	Engine (Incl. Ref. #4, 8, & 9)	1
4	80-4800	Decal - Recoil	1

Ref. No.	Part No.	Description	No. Used
5	66-0570	Guide - Belt	1
6	32144-70	Screw - Hex Washer Hd.	2
7	32144-102	Screw - Thread Forming	3
8	76-4710	Plate - Toro	1
9	55-3570	Gas Cap Assembly	1

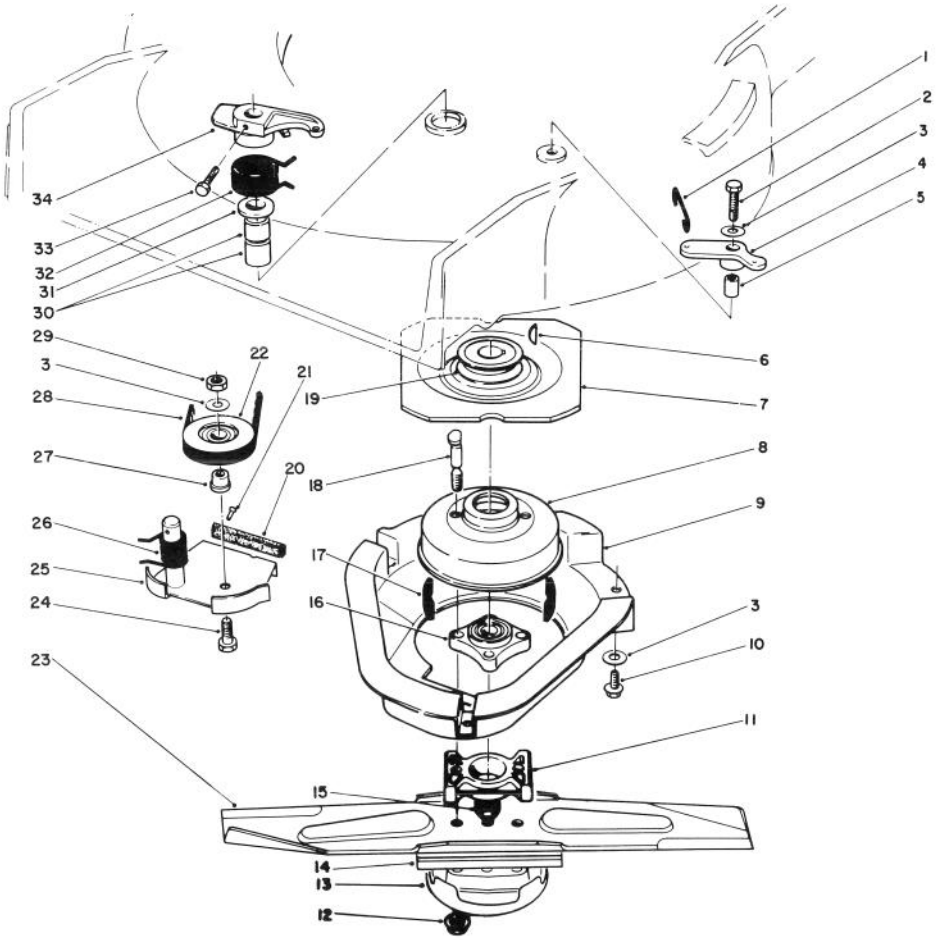

C-0377

BLADE BRAKE CLUTCH ASSEMBLY

Ref. No.	Part No.	Description	No. Used
1	49-2810	Link – Control	1
2	32104-107	Screw – Self Tap Hex Hd.	1
3	3256-23	Washer – Plain	5
4	49-7960	Bell Crank	1
5	49-7950	Sleeve – Bell Crank	1
6	3257-17	Key – Woodruff	1
7	56-6160	Flywheel	1
8	56-6170	Drum – Brake	1
9	46-5690	Shield	1
10	32144-70	Screw – Thread Forming Hex Washer Hd.	3
11	62-4280	Spacer – Blade	1
12	54-9190	Locknut	2
13	80-2770	Cup – Anti-Scalp	1
14	80-0510	Stiffener – Blade	1
15	3296-33	Locknut	1
16	42-6890	Hub Assembly	1
17	52-3480	Dampener – Vibration	2
18	42-3190	Bolt – Blade	2

Ref. No.	Part No.	Description	No. Used
19	62-7560	Pulley Driver	1
20		Pad – Brake	1
21	3295-23	Rivet – Semi Tubular	2
22	46-5650	Pulley Idler	1
23	14-1659	Blade – 21" (Incl. Ref. #14)	1
24	322-16	Hex Hd. Capscrew	1
25	49-7920	Brake Plate (Incl. Ref. # 20 & 21)	1
26	46-5670	Spring – Torsion Lower	1
27	46-5630	Hub – Idler Pulley	1
28	42-0884	V-Belt	1
29	3296-47	Locknut	1
30	68-9780	Bearing	2
31	70-1160	Washer – P.M.	1
32	49-7970	Spring – Torsion Upper	1
33	32104-96	Screw – Self Tap Hex Hd.	1
34	49-2820	Lever	1

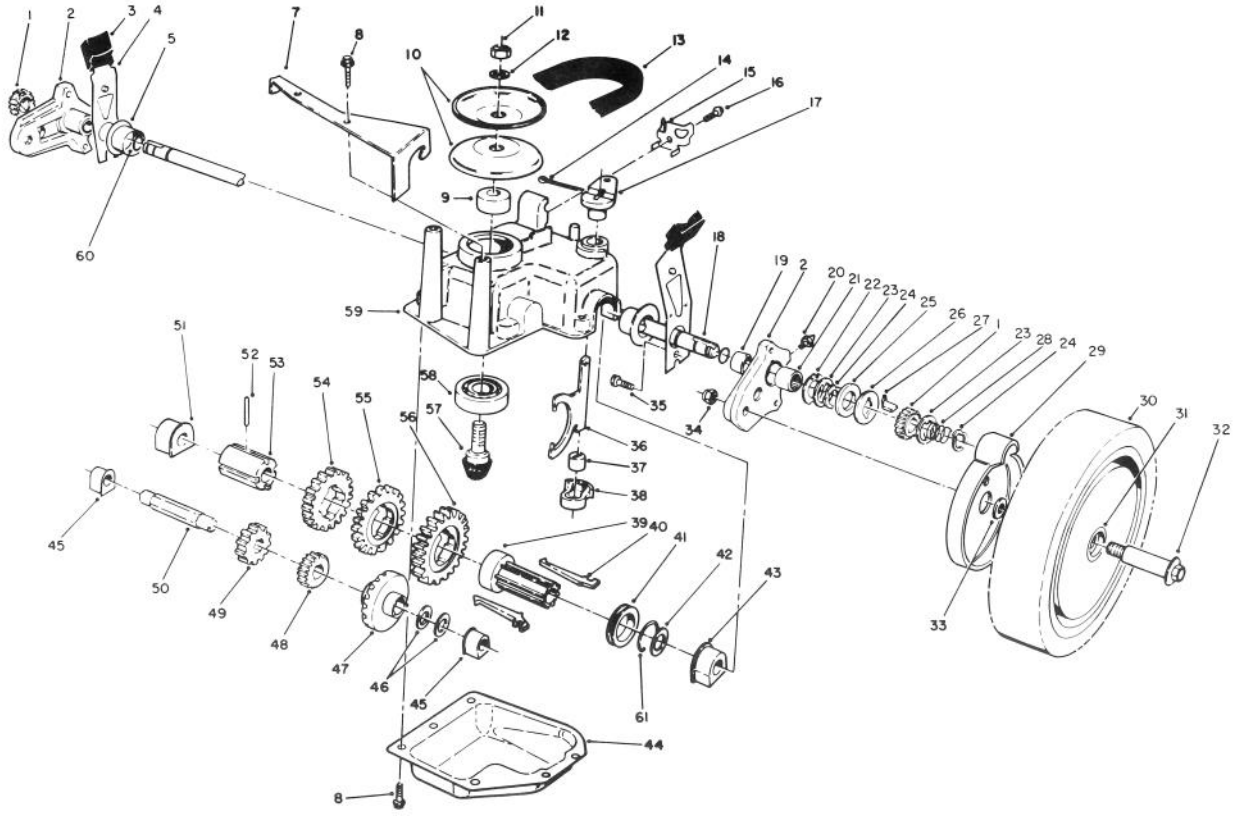

C–0521

GEAR CASE ASSEMBLY

Ref. No.	Part No.	Description	No. Used
1	65–4750	Pinion	2
2	63–8701	Pivot Arm Assembly (Incl. Ref # 19, 20, & 21)	2
3	25–7740	Knob – Arm	2
4	63–8720	Spring Arm Assembly	2
5	42–3520	End Cap	2
7	62–4320	Bracket – Belt Guide	1
8	49–2040	Screw – Self Tapping	8
9	62–6660	Spacer	1
10	60–8840	Pulley – Half	2
11	3296–5	Locknut	1
12	3256–24	Washer – Flat	1
13	62–3900	V–Belt	1
14	3272–10	Pin – Cotter	1
15	82–8780	Cable – Retainer	1
16	32144–70	Screw – Thread Forming	1
17	60–8820	Lever – Shift	1
18	65–4770	Shaft – Output	1
19	70–9760	Bushing	2
20	302–56	Fitting – Grease	2
21	48–2060	Needle Bearing	2
22	65–4730	Thrust Washer	2
23	65–4740	Thrust Washer	4
24	65–2720	Ring – Retaining	4
25	65–4710	Ring – Friction	2

Ref. No.	Part No.	Description	No. Used
26	65–4760	Washer – Clutch	2
27	66–6050	Key – Rocker L.H.	1
*	66–6040	Key – Rocker R.H.	1
28	65–4720	Spring	2
29	74–1660	Cover – Wheel	2
30	11–9519	Wheel – Tire & Gear Ass'y (Incl. Ref. # 31)	2
31	27–6250	Bushing – Wheel	4
32	27–6231	Wheel Bolt	2
33	74–1671	Spacer – Wheel Cover	2
34	52–3620	Locknut	2
35	32144–85	Screw	2
36	60–8870	Yoke – Shift	1
37	29–9570	Bushing – Yoke	1
38	60–8810	Retainer – Shift Fork	1
39	76–0780	Sleeve – Shift Key	1
40	76–0760	Key – Shift	2
41	76–0770	Collar – Shift	1
42	36–4780	Washer – Thrust	1
43	60–8770	Bushing – Output Shaft	1
44	60–8730	Cover – Gear Case	1
45	60–8750	Bushing – Int. Shaft	2
46	36–4791	Washer – Thrust	2
47	55–3760	Gear – Pinion 15 Tooth	1
48	55–3780	Gear – Pinion 20 Tooth	1

*Not Illustrated

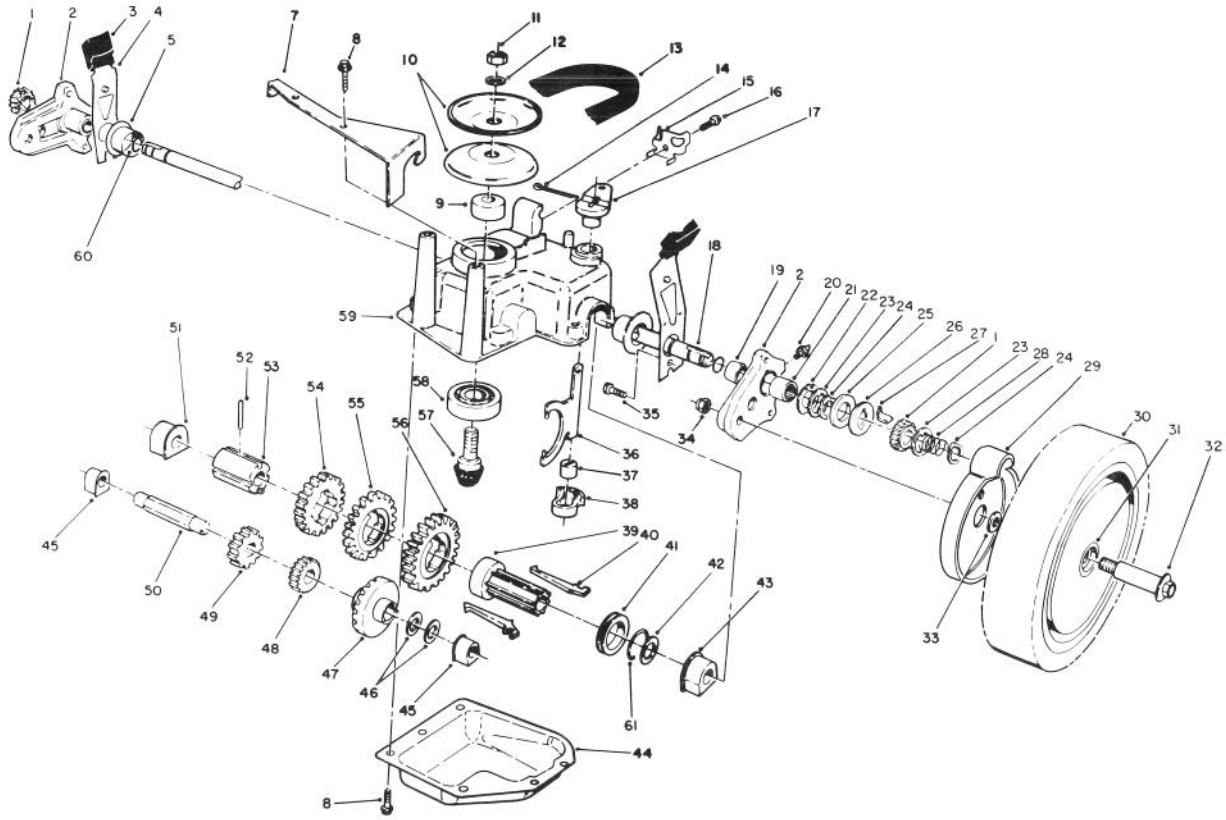

C-0521

GEAR CASE ASSEMBLY (CONTINUED)

Ref. No.	Part No.	Description	No. Used
49	55-3800	Gear – Pinion	1
50	60-8800	Shaft – Intermediate	1
51	60-8850	Bushing – Output Shaft	1
52	32121-120	Pin – Coil	1
53	60-8790	Sleeve – Gear	1
54	55-3810	Gear – 39 Tooth 3rd Gear	1
55	55-3790	Gear – 44 Tooth 2nd Gear	1

Ref. No.	Part No.	Description	No. Used
56	55-3770	Gear – 49 Tooth 1st Gear	1
57	60-8890	Pinion – Bevel	1
58	38-7820	Bearing – Ball	1
59	60-8710	Gear Case – Upper	1
60	237-153	O-Ring	2
61	65-5250	Clip – Spring	1
*	62-6673	Gear Case Assembly	1

*Not Illustrated

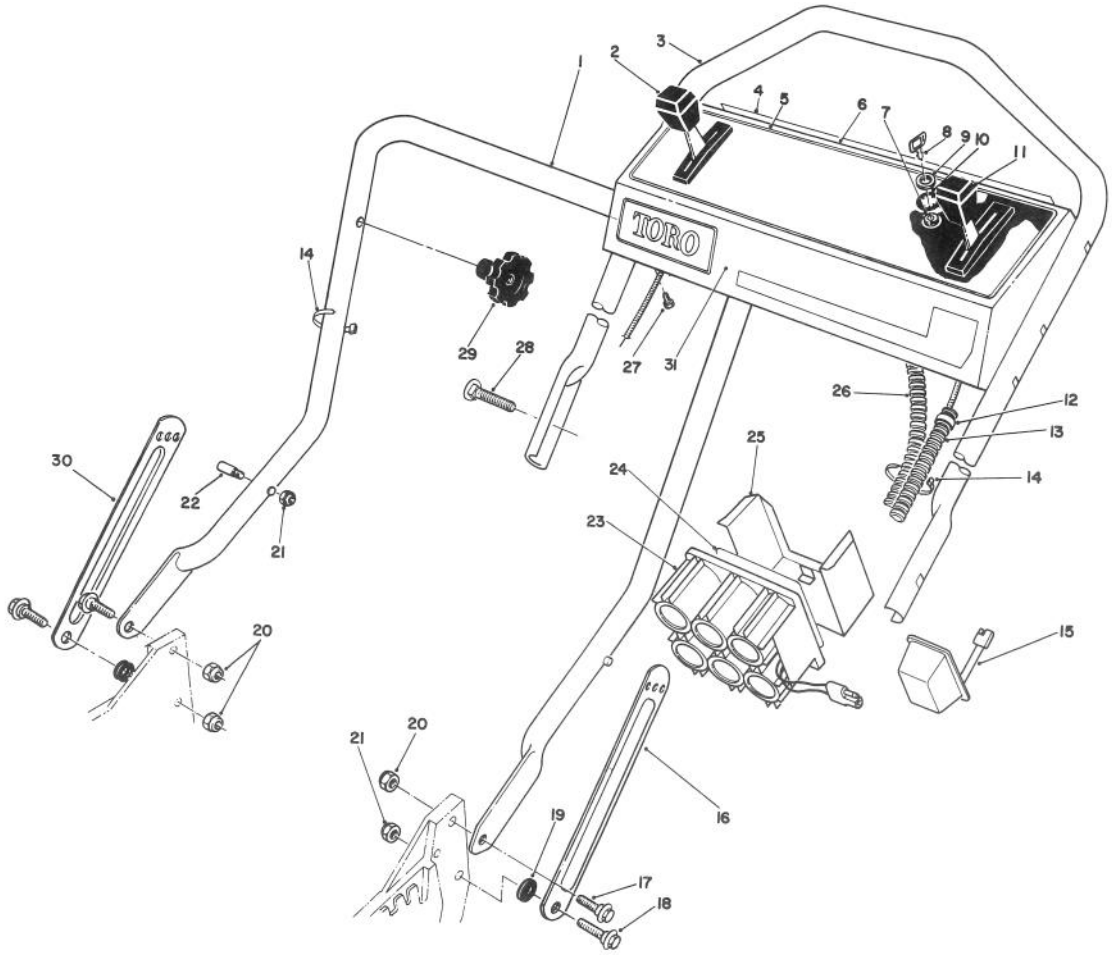

C–1092

HANDLE ASSEMBLY

Ref. No.	Part No.	Description	No. Used
1	43–1361	Handle – Lower	1
2	76–2711	Control – Ground Speed	
3	46–5410	Handle – Upper	1
4	66–1790	Decal – Danger	1
5	66–0270	Decal – Instructions	1
6	13–2229	Panel – Control (Incl. Ref. #4 & 5)	1
7	46–5780	Switch – Starter	1
8	63–8360	Key – Ignition	1
9	218–461	Nut – Hex	1
10	3254–5	Washer – Lock	1
11	66–0236	Control – Throttle (Bend Type #5) (Sheath Lg. 62 3/4") (Wire Lg. 2 1/16")	1
12	2412–50	Clip – Convoluted Tubing	3
13	46–6440	Cover – Control Cables	1
14	3290–378	Tie – Cable	5

Ref. No.	Part No.	Description	No. Used
15	6–9780	Charger – Battery	1
16	84–8360	Latch – Handle L.H.	1
17	27–7211	Screw – Shoulder	2
18	27–7210	Screw – Shoulder	2
19	3–3287	Spacer – Handle Latch	2
20	3296–29	Nut – Lock	3
21	3296–47	Nut – Lock	3
†22	49–2750	Pin – Handle	2
23	55–7520	Battery Assembly	1
24	55–8190	Decal – Charging Instructions	1
25	55–8180	Retainer – Battery	1
26	80–4790	Harness – Wire	1
27	32104–76	Screw – Self Tap Slotted	4
28	17–9421	Screw – Handle	2
29	19–4050	Knob – Handle Release	2
30	84–8400	Latch – Handle R.H.	1
31	84–5630	Decal – Toro	1

†Service Replacement Part

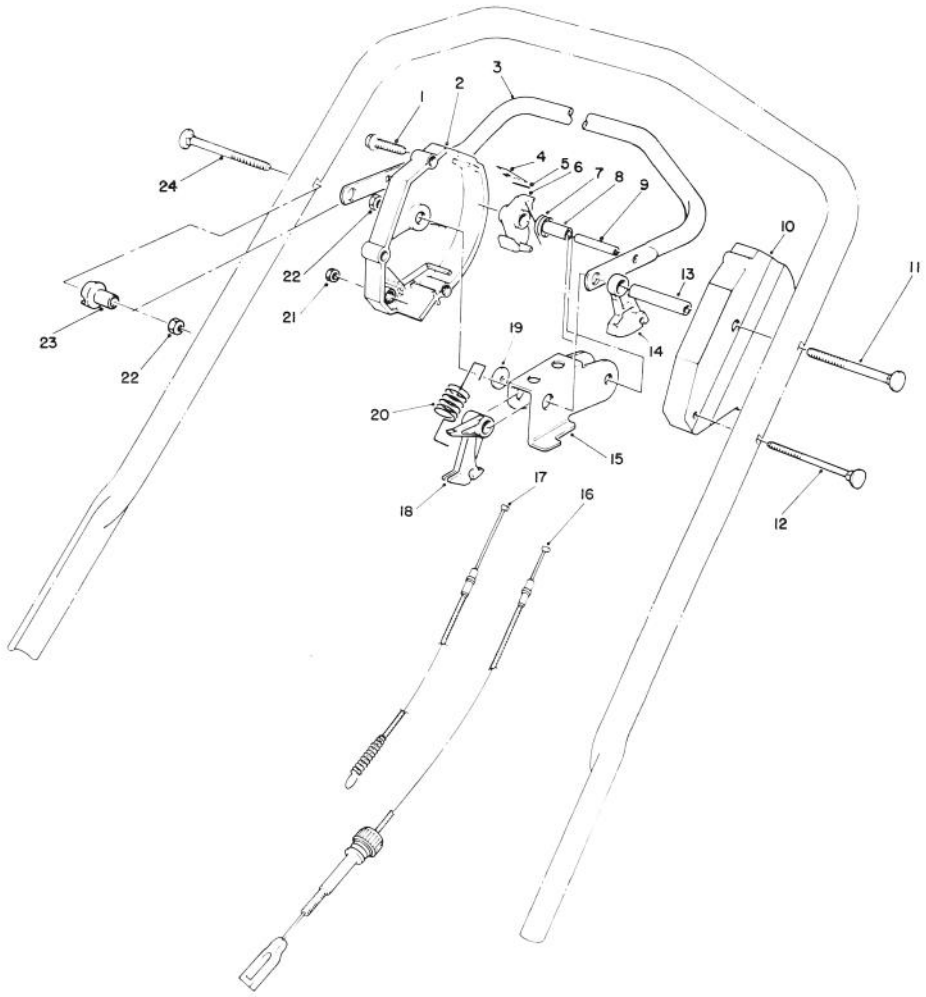

C–0341

TRACTION CONTROL ASSEMBLY

Ref. No.	Part No.	Description	No. Used
1	46–7040	Screw – Thread Forming Hex Washer Hd.	3
2	12–3429	Housing – Control R.H. (Incl Ref. # 4 & 5)	1
3	52–7430	Control Bar Assembly	1
4	52–7410	Spring – Leaf	1
5	57–6290	Pin – Insert	1
6	46–5530	Hook – Control	1
7	46–5510	Spring – Torsion	1
8	46–5550	Bushing – P.M.	1
9	32121–9	Pin – Coil	1
10	46–5460	Housing – Control L.H.	1
11	17–9422	Screw – Handle	1

Ref. No.	Part No.	Description	No. Used
12	46–6431	Screw – Handle	1
13	46–5590	Spacer	1
14	46–5520	Lever – Traction	1
15	66–0180	Rocker	1
16	46–5480	Cable – Traction	1
17	83–6600	Cable – Clutch	1
18	46–5540	Lever – Cable	1
19	66–0170	Washer – Nylon	1
20	66–0190	Spring – Detent	1
21	3296–8	Locknut	1
22	3296–58	Locknut	2
23	49–1630	Support – Spacer	1
24	17–9421	Screw – Handle	1

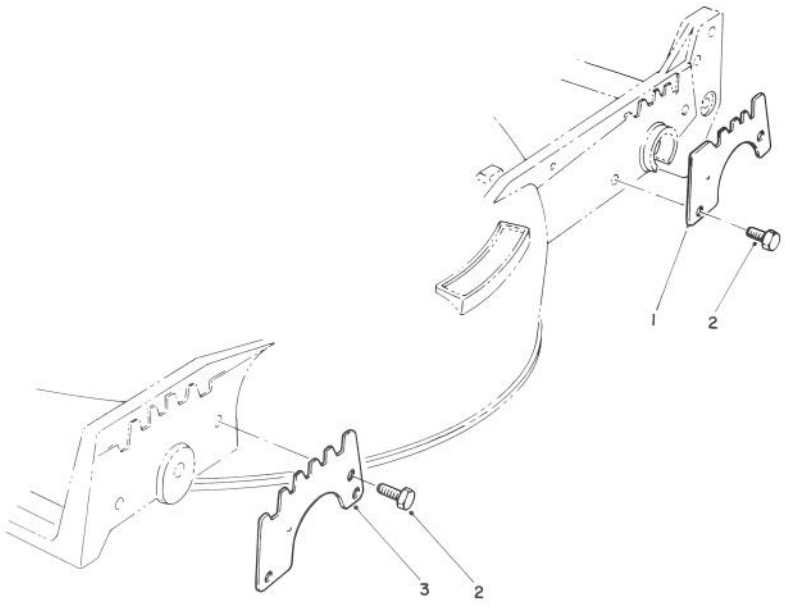

C-0332

WEAR PLATE MODEL NO. 49-4080 (OPTIONAL)

Ref. No.	Part No.	Description	No. Used
1	49-4070	Plate - Rear Wear	2
2	32104-17	Thread Forming Screw	8

Ref. No.	Part No.	Description	No. Used
3	43-5050	Plate - Wear Front	2

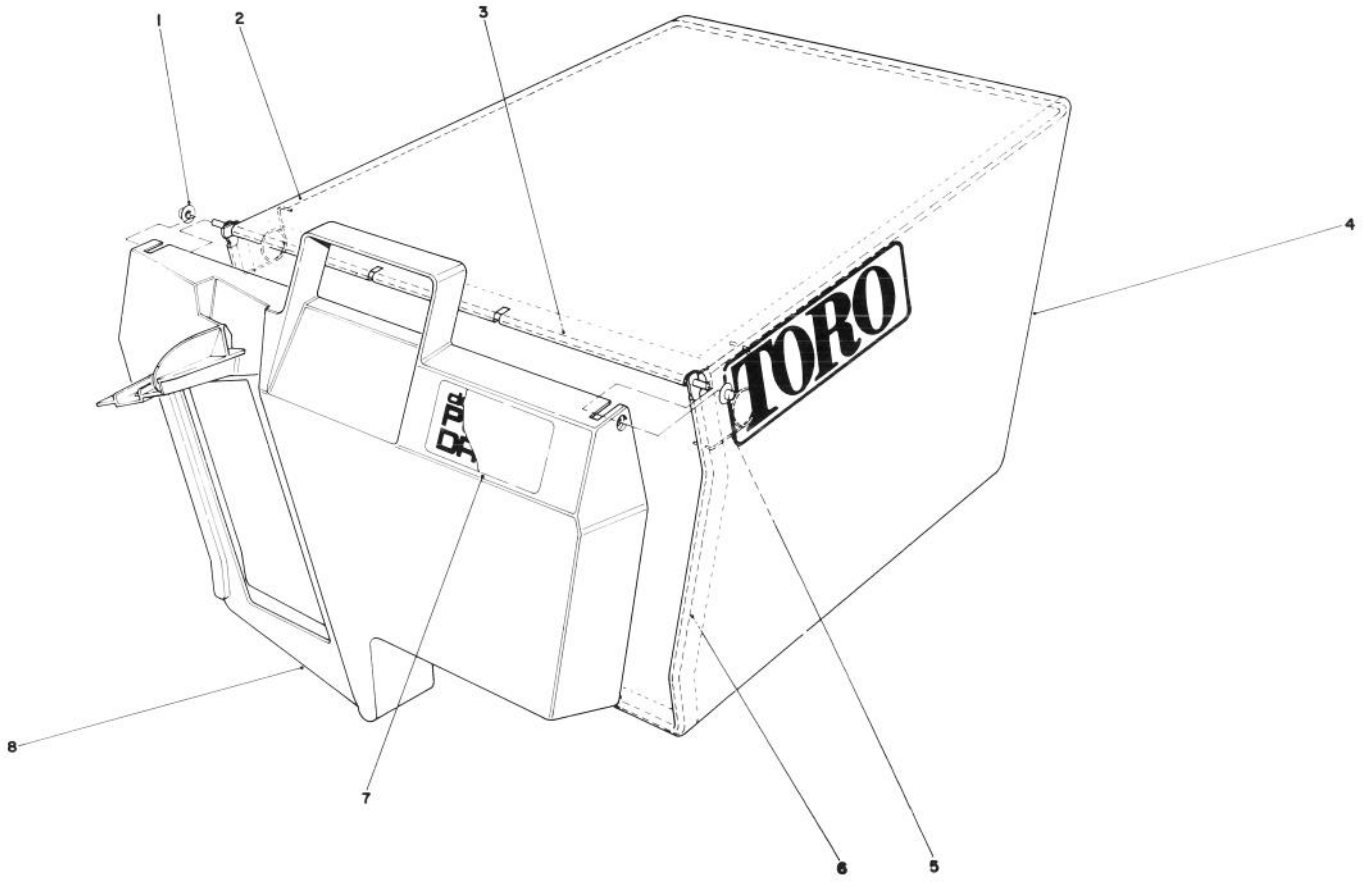

C–0731

GRASS BAG ASSEMBLY NO. 11–0189

Ref. No.	Part No.	Description	No. Used
1	3290–422	Nut – Push	2
2	42–4030	Bag Frame – Upper	1
3	33–4820	Hinge – Bag Door	1
4	44–0522	Bag – Grass	1

Ref. No.	Part No.	Description	No. Used
5	36–6910	Spring	2
6	42–4020	Frame – Bag	1
7	66–2150	Decal – Bag Door	1
8	37–1393	Door – Grass Bag	1

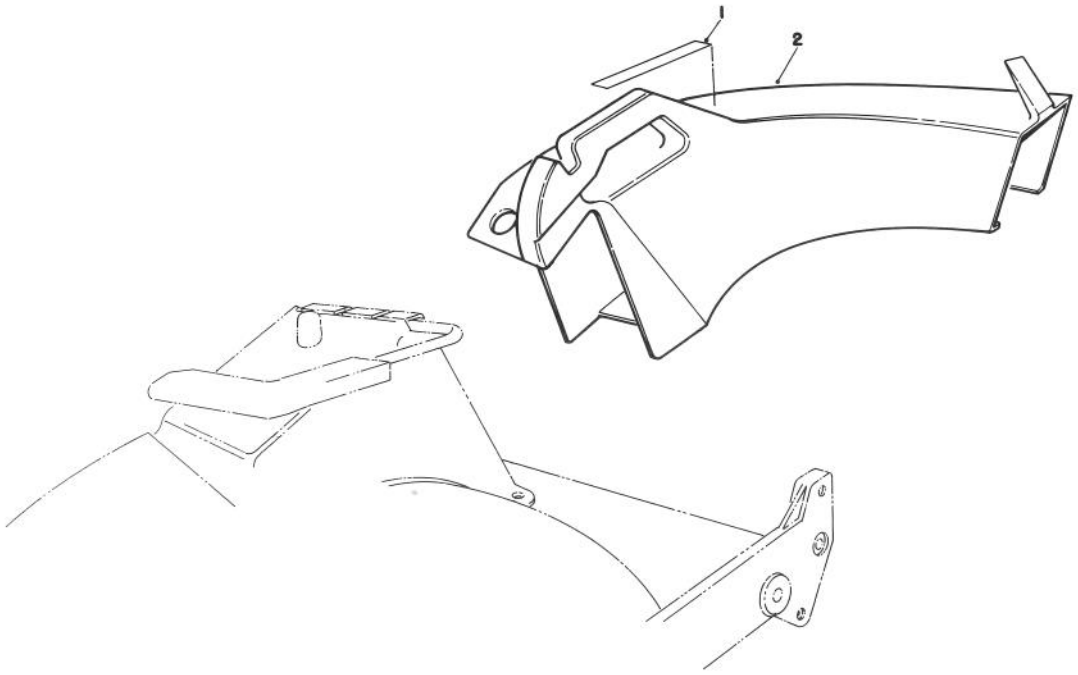

T-0716

SIDE DISCHARGE CHUTE MODEL NO. 59168 (OPTIONAL)

Ref. No.	Part No.	Description	No. Used
1	76-4780	Decal – Caution	1
2		Chute – Discharge (Incl. Ref. #1)	1

Ref. No.	Part No.	Description	No. Used

ENGINE GTS–150 77–8990

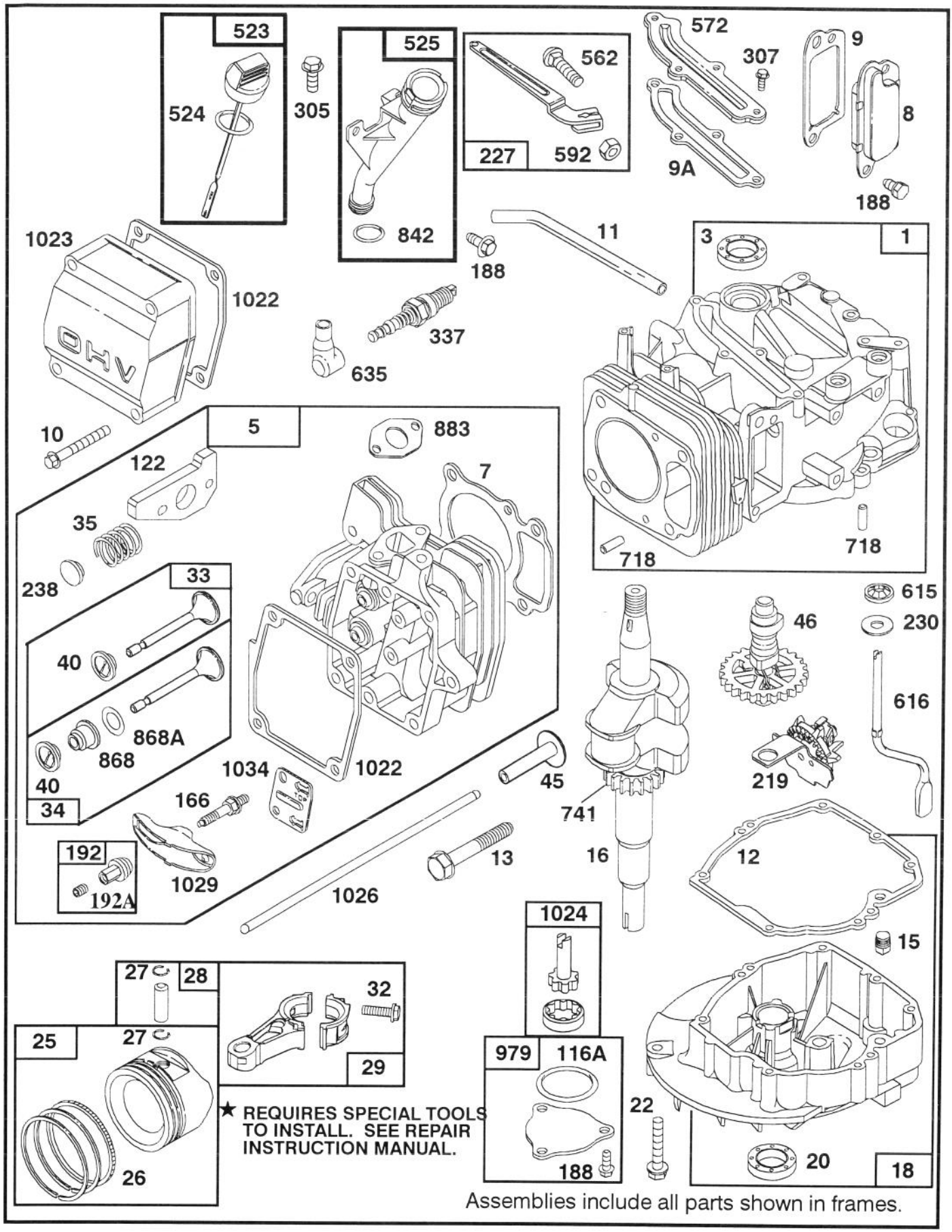

ENGINE GTS–150 77–8990

Ref. No.	Part No.	Description	No. Used
1	77–7590	Cylinder Assy.	1
*3	77–9060	Seal – Oil	1
5	77–7730	Head – Cylinder	1
*7	77–7740	Gasket – Cylinder Head	1
8	77–7430	Breather Valve	1
*9	77–7440	Gasket – Valve Cover	1
*9A	77–7410	Gasket – Breather	1
10	77–7360	Screw – Hex. Head (valve cover)	4
11	77–7350	Tube – Breather	1
*12	77–7550	Gasket – Engine Base	1
13	77–7630	Screw – Cylinder Head	4
15	77–7580	Plug – Oil Drain	1
16	77–7510	Crankshaft Note: Order Part No. 77–7540 For Timing Gear Key	1
18	77–7560	Base – Engine	1
*20	77–7570	Seal – Oil	1
22	77–9070	Screw – Engine Base Note: Order Part No. 77–9080 For Hole Nearest Breather	1
25	77–7690	Piston Assy. (Std.)	1
26	77–7700	Ring Set (Std.)	1
27	77–7710	Lock – Piston Pin	2
28	77–7720	Pin – Piston (STD)	1
29	77–7670	Rod – Connecting	1
32	77–7680	Screw – Connecting Rod	2
33	77–7860	Valve – Exhaust	1
34	77–7880	Valve – Intake	1
35	77–7810	Spring – Valve	2
40	77–7870	Retainer – Spring	2
45	77–7610	Tappet – Valve	2
46	77–7490	Gear – Cam	1
*116A	77–7660	Seal – O Ring	1
†122	77–7820	Adapter Assy.	1

Ref. No.	Part No.	Description	No. Used
166	77–7780	Stud – Rocker Arm	2
188	77–7450	Screw – Sem (Breather Mounting, pump cover)	5
192	77–7910	Nut – Hex Special	2
192A	77–9090	Screw – Set	1
219	77–7500	Gear – Governor	1
227	77–7370	Lever – Governor	1
230	77–7470	Washer – Thrust	1
238	77–7800	Cap – Valve	2
305	77–8310	Screw – Hex. Head	2
307	77–7420	Screw – Sem (Breather Cover)	4
337	77–7330	Plug – Spark	1
523	77–7260	Dipstick – Oil	1
*524	77–7270	Seal – Intake Elbow	1
525	77–7290	Tube – Oil Filler	1
562	77–7380	Bolt – Governor Lever	1
572	77–7400	Baffle – Cylinder	1
592	77–7390	Nut – Hex.	1
615	77–7480	Fastener	1
616	77–7460	Crank – Governor	1
635	77–7340	Elbow – Spark Plug	1
718	77–7600	Dowel – Sleeve	2
741	77–7530	Gear – Timing	1
*842	77–7300	Seal – O Ring	1
*868	77–7890	Seal Assy. – Valve	1
*868A	77–7900	Gasket – Valve	1
*883	77–7760	Gasket – Exhaust	1
979	77–7650	Cover – Oil Pump	1
*1022	77–7320	Gasket – Rocker Cover	1
1023	77–7060	Cover – Valve	1
1024	77–7640	Pump – Oil	1
1026	77–7620	Rod – Push	2
1029	77–7790	Arm – VLV Rocker	2
1034	77–7770	Guide – Push Rod	1

*Included in Gasket Set
†Included in Carburetor Overhaul Kit

ENGINE GTS–150 77–8990

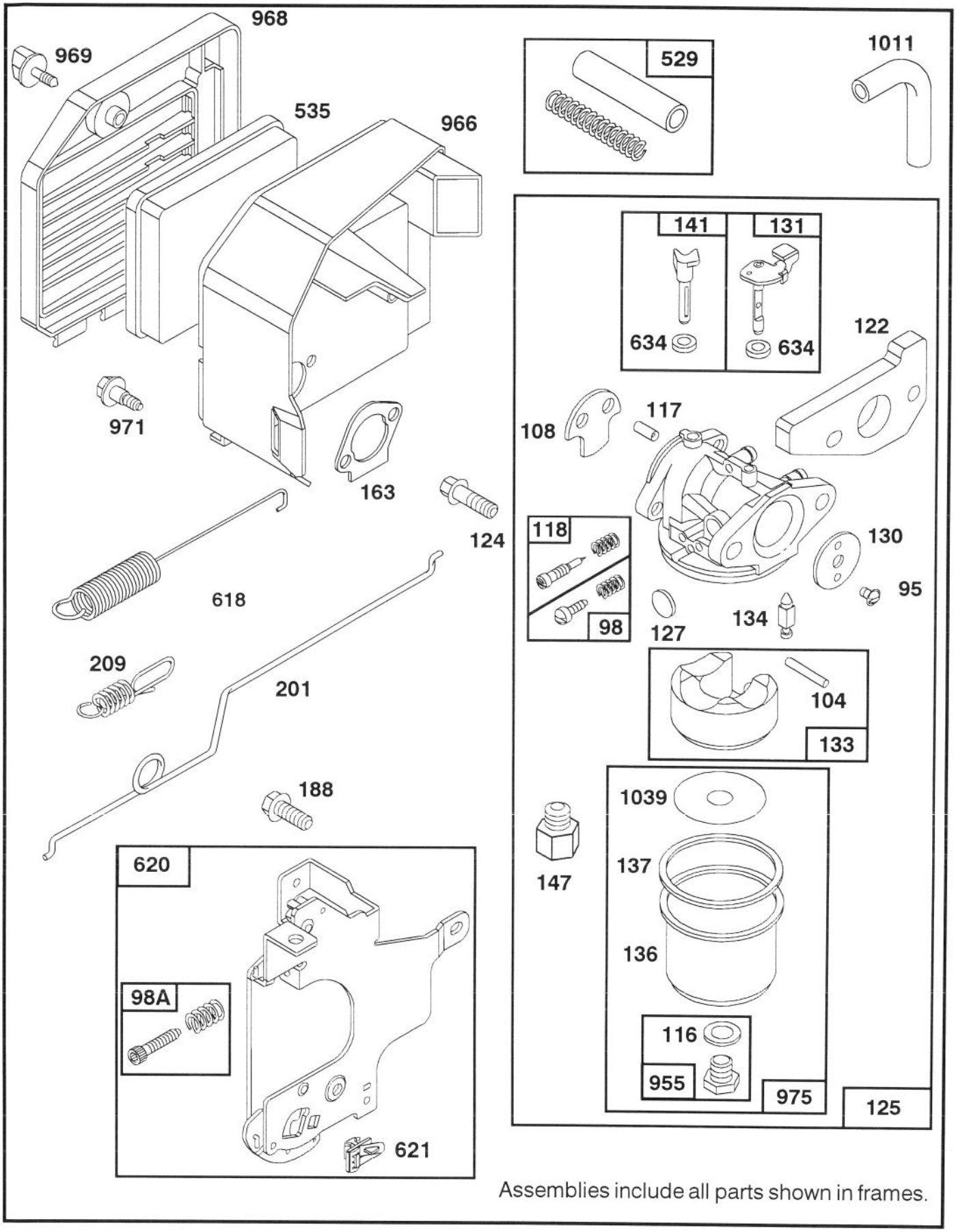

Assemblies include all parts shown in frames.

ENGINE GTS–150 77–8990

Ref. No.	Part No.	Description	No. Used
95	77–8090	Screw – Round Head	1
98	77–8240	Screw – Idle Adj.	1
98A	77–8020	Screw Assy – Speed Adj.	1
†104	77–8180	Pin – Float Hinge	1
108	77–8070	Valve – Choke	1
†116	77–8210	Washer – Fuel Bowl	1
†117	77–8060	Jet – Needle Valve	1
†118	77–8230	Valve & Kit – Needle	1
†122	77–7820	Adapter Assy.	1
124	77–7970	Screw – Hex Head (Carburetor Mounting)	2
125	77–8050	Carburetor Assy.	1
†127	77–8100	Plug – Welch	1
130	77–8080	Valve – Throttle	1
131	77–8160	Shaft – Throttle	1
133	77–8170	Float – Carburetor	1
†134	77–8110	Valve – Float (Includes Seat)	1
136	77–7240	Bowl – Fuel	1
†137	77–8200	Gasket – Fuel Bowl	1
141	77–8130	Shaft – Choke	1
147	77–8120	Adapter – Jet Note: For High Altitude Jet, Order Part No. 77–9000	1

Ref. No.	Part No.	Description	No. Used
*163	77–7960	Gasket – Air Cleaner	1
188	77–7450	Screw – Hex. Head (connecting bracket)	2
201	77–7980	Link – Governor	1
209	77–7990	Spring – Governor	1
529	77–8030	Tube – Breather	1
535	77–7950	Element – Filter Note: 77–9010 – Element Paper (Optional)	1
618	77–8140	Spring – Return	1
620	77–8000	Bracket – Carburetor	1
621	77–8010	Switch – Stop	1
†634	77–8150	Washer – Seal	2
955	77–8220	Screw – Hex. Head	1
966	77–7940	Base Air Cleaner	1
968	77–7040	Cover – Air Cover	1
969	77–7920	Screw – Air Cleaner	1
971	77–7930	Screw – Air Cleaner	3
975	77–8190	Bowl Assy. – Carburetor	1
1011	77–8040	Tube – Vent	1
†1039	77–7250	Limiter – Float	1

*Included in Gasket Set
†Included in Carburetor Overhaul Kit

ENGINE GTS–150 77–8990

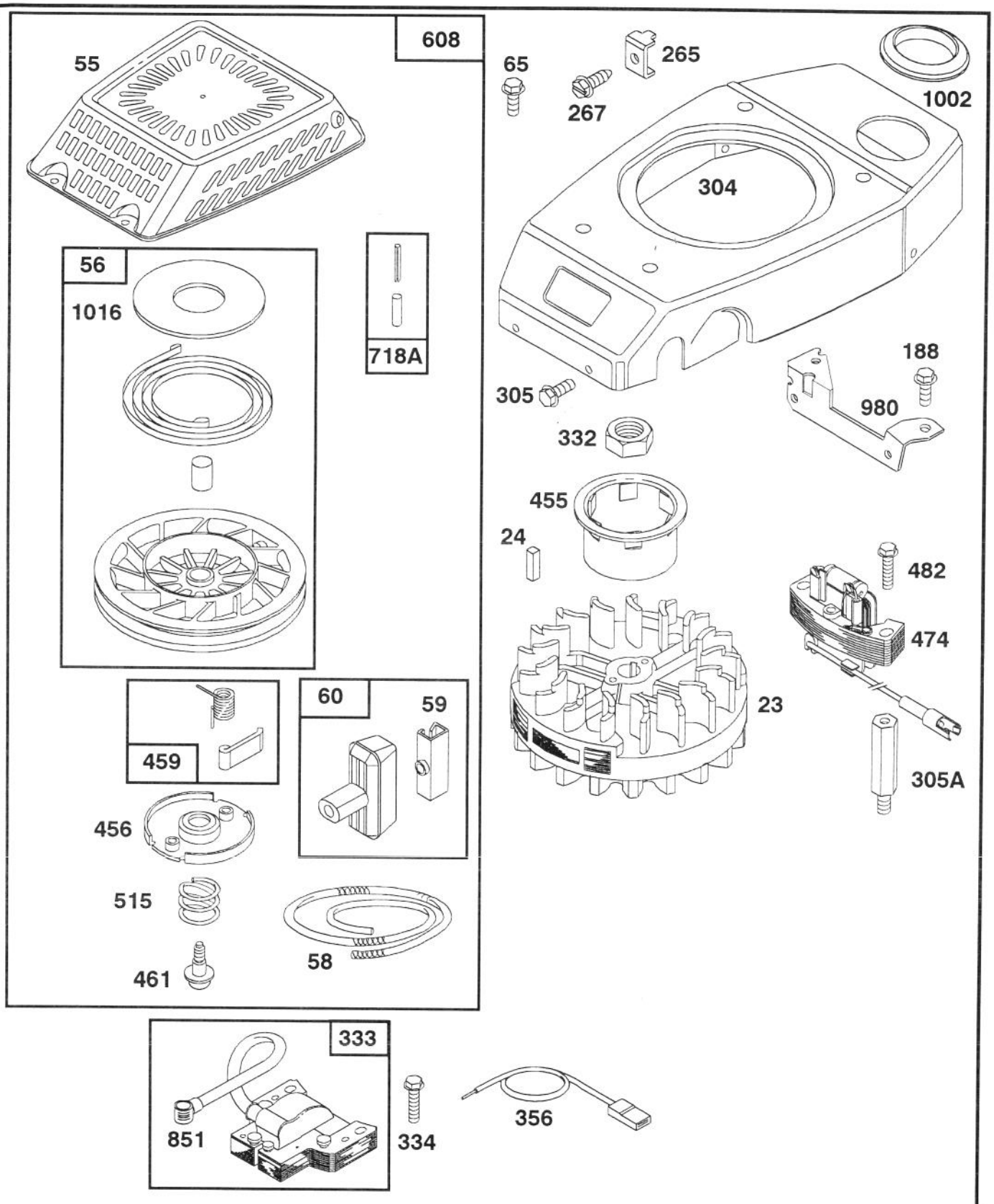

Assemblies include all parts shown in frames.

ENGINE GTS–150 77–8990

Ref. No.	Part No.	Description	No. Used
23	77–8320	Flywheel – Magneto	1
24	77–8340	Key – Flywheel	1
55	77–8460	Housing – Rewind Starter	1
56	77–8560	Pulley – Rewind Starter	1
58	77–8480	Spool – Starter Rope (Cut To Suit)	1
59	77–7210	Insert – Starter Grip	1
60	77–8510	Grip – Starter Rope	1
65	77–8300	Screw – Hex. Head	4
188	77–7450	Screw – Hex. Head (Blower bracket)	2
265	77–8280	Clamp – Casing	1
267	77–8290	Screw – Hex Head	1
304	77–8250	Housing – Blower	1
305	77–8310	Screw – Hex. Head (Blower Housing)	4
305A	77–8390	Stud – Mtg.	2

Ref. No.	Part No.	Description	No. Used
332	77–8360	Nut – Hexagon	1
333	77–8420	Armature – Magneto	1
334	77–8440	Screw – Sem	2
356	77–8400	Wire – Ground	1
455	77–8350	Cup – Starter	1
456	77–8470	Retainer – Spring	1
459	77–8530	Pawl & spring – Ratchet	2
461	77–8490	Screw – Rewind Starter	1
474	77–8370	Alternator	1
482	77–8380	Screw – Sem	2
515	77–8500	Spring – Retainer	1
608	77–8450	Starter Assy. – Rewind	1
718A	77–8550	Dowel – Sleeve	1
851	77–8430	Terminal – Spark Plug	1
980	77–7140	Bracket – Blower Housing	1
1002	77–7180	Grommet	1
1016	77–8570	Cover – Pulley	1

ENGINE GTS–150 77–8990

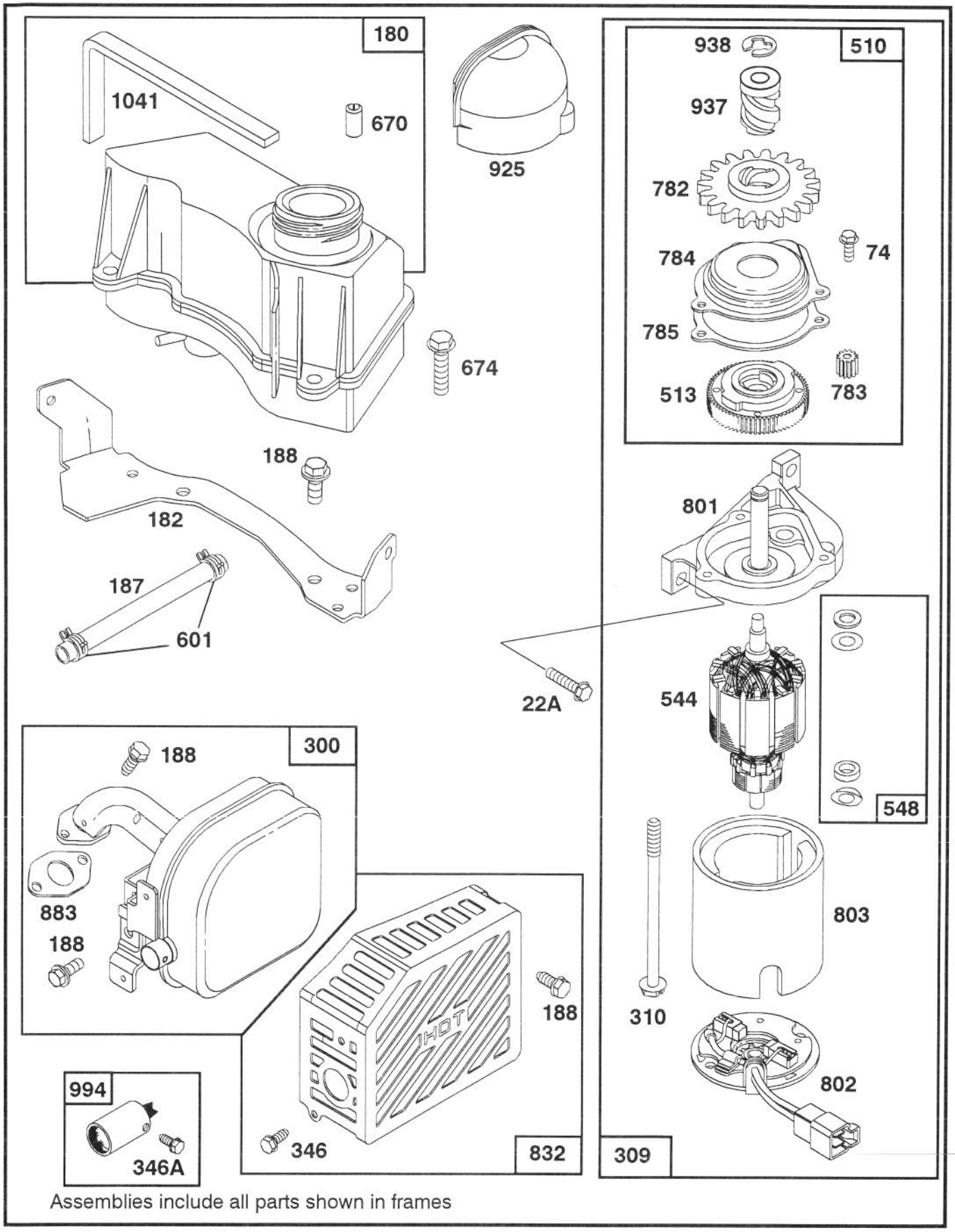

Assemblies include all parts shown in frames

ENGINE GTS–150 77–8990

Ref. No.	Part No.	Description	No. Used
22A	77–8720	Screw – Carb. Mtg.	2
74	77–8800	Screw – Sem	3
180	77–8580	Tank Assy. – Fuel	1
182	77–7170	Bracket – Fuel Tank	1
187	77–8620	Hose – Fuel (Cut To Suit)	1
188	77–7450	Screw – Hex. Head (Muffler guard, muffler manifold to head, connecting bracket, Tk bracket)	7
300	77–8640	Muffler – Exhaust	1
309	77–8670	Motor Starter	1
310	77–8710	Bolt – Thru	2
346	77–8650	Screw – Self Tap (Muffler Guard)	2
346A	77–9050	Screw – Arrester Mtg.	1
510	77–8910	Drive – Starter	1
513	77–8770	Clutch – Starter	1
544	77–8730	Armature Starter	1
548	77–8740	Washer – Starter	1
601	77–8630	Clamp – CL Pipe	2
670	77–9030	Spacer – Fuel Tank (Incl. 2)	1
674	77–8600	Screw – Tank Mtg.	2
782	77–8810	Gear – Starter	1
783	77–8760	Gear – Pinion	1
784	77–8780	Cover – Gear	1
785	77–8790	Gasket – Gear Cover	1
801	77–8680	Cap – Drive	1
802	77–8690	Cap – End	1
803	77–8700	Housing – Starter	1
832	77–8660	Guard – Muffler	1
*883	77–7760	Gasket – Exhaust	1
925	77–7200	Cover – Starter	1
937	77–8820	Drive – Starter	1
938	77–8830	Retainer – Lock	1
994	77–9040	Arrester – Spark	1
*1041	77–8590	Seal – Foam	1

*Included in Gasket Set

ENGINE GTS–150 77–8990

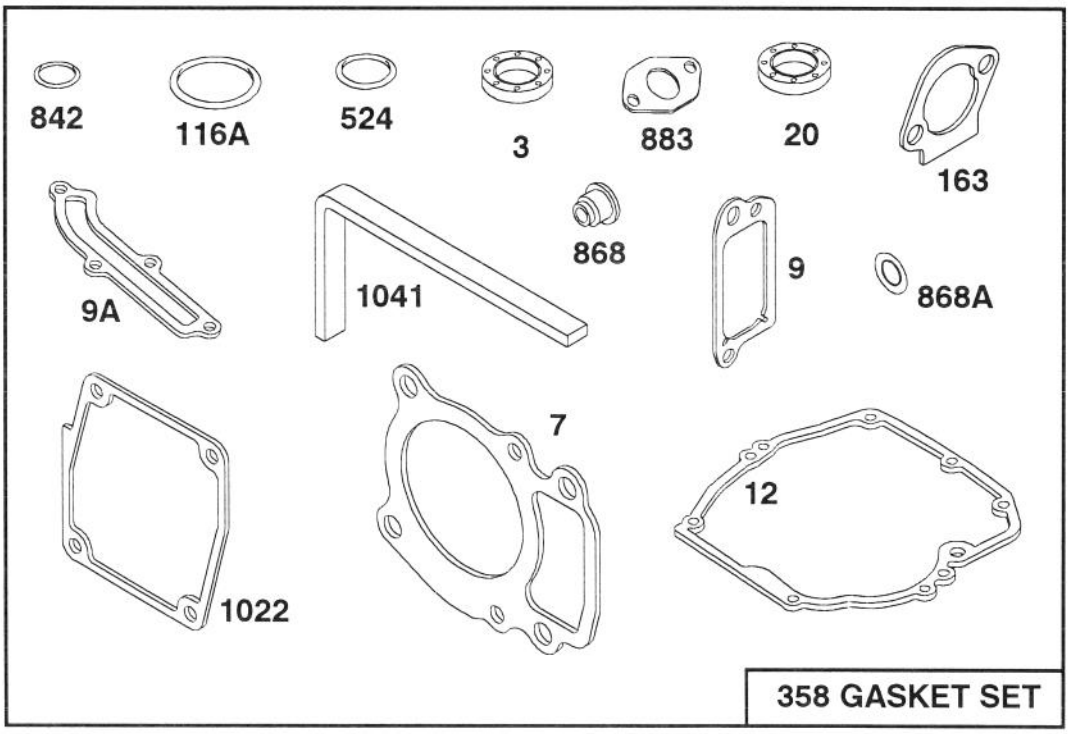

358 GASKET SET

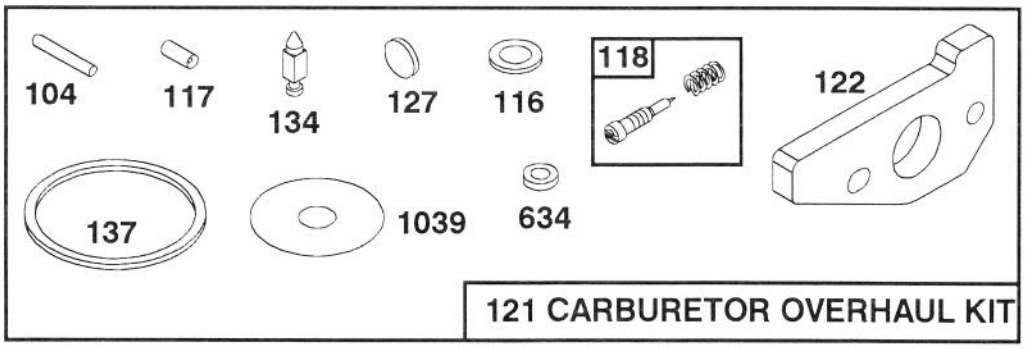

121 CARBURETOR OVERHAUL KIT

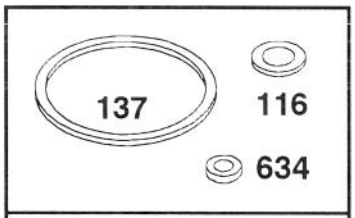

977 CARBURETOR GASKET SET

Assemblies include all parts shown in frames.

ENGINE GTS–150 77–8990

Ref. No.	Part No.	Description	No. Used
3	77–9060	Seal – Oil	1
7	77–7740	Gasket – Cylinder Head	1
9	77–7440	Gasket – Valve Cover	1
9A	77–7410	Gasket – Breather	1
12	77–7550	Gasket – Engine Base	1
20	77–7570	Seal – Oil	1
104	77–8180	Pin – Float Hinge	1
116	77–8210	Washer – Fuel Bowl	1
116A	77–7660	Seal – O Ring	1
117	77–8060	Jet – Needle Valve	1
118	77–8230	Valve & Kit – Needle	1
121	77–8920	Overhaul Kit – Carburetor	1
122	77–7820	Adapter Assy.	1
127	77–8100	Plug – Welch	1
134	77–8110	Valve – Float (Includes Seat)	1

Ref. No.	Part No.	Description	No. Used
137	77–8200	Gasket – Fuel Bowl	1
163	77–7960	Gasket – Air Cleaner	1
358	77–8900	Gasket Set	1
524	77–7270	Seal – Intake Elbow	1
634	77–8150	Washer – Seal	2
842	77–7300	Seal – O Ring	1
868	77–7890	Seal Assy. – Valve	1
868A	77–7900	Gasket – Valve	1
883	77–7760	Gasket – Exhaust	1
977	77–8930	Gasket Set – Carburetor	1
1022	77–7320	Gasket – Rocker Cover	1
1039	77–7250	Limiter – Float	1
1041	77–8590	Seal – Foam	1
	77–9020	Short Block	1
	77–8990	GTS150 Key/BBC Engine	1
	77–9000	High Altitude Jet	1

PRODUCT CHANGES

In an effort to make improvements available to TORO owners as quickly as possible, minor changes are incorporated into Toro's products from time to time that do not become immediately shown in the Parts Catalog. If such a change has been made in your unit, which is not reflected in your manual, see your TORO Distributor or his Authorized TORO Service Dealer for information and part numbers.

COUNTRIES OTHER THAN THE UNITED STATES OR CANADA

Customers who have purchased TORO products exported from the United States or Canada should contact their Toro Distributor (Dealer) to obtain guarantee policies for your country, province or state. If for any reason you are dissatisfied with your Distributor's service or have difficulty obtaining guarantee information, contact the TORO importer. If all other remedies fail, you may contact us at The Toro Company.

MAINTENANCE RECORD

Date								

Compliance with Radio Interference Regulations Certified.
Certifie Conforme au Reglement sur le Brouillage Radioelectrique.

Litho in U.S.A.

MAINTENANCE RECORD

Date								

MAINTENANCE RECORD

Date								